California High-Speed Train System

TECHNICAL MEMORANDUM

Rolling Stock and Vehicle Intrusion Protection for High-Speed Rail and Adjacent Transportation Systems TM 2.1.7

Prepared by:	*Signed document on file* Afshin Abtahi, PE	10 Jun 13 Date
Checked by:	*Signed document on file* Hung Nguyen, PE	10 Jun 13 Date
Approved by:	*Signed document on file* John Chirco, PE, Engineering Manager	10 Jun 13 Date
Released by:	*Signed document on file* Brent Felker, PE, Program Director	18 Jun 13 Date

Revision	Date	Description
0	25 Oct 08	Initial Release
1	10 Jun 13	Update to include Highway Intrusion Guidelines

Note: Signatures apply for the latest technical memorandum revision as noted above.

Prepared by PARSONS BRINCKERHOFF

for the California High-Speed Rail Authority

This document has been prepared by ***Parsons Brinckerhoff*** for the California High-Speed Rail Authority and for application to the California High-Speed Train System. Any use of this document for purposes other than this Project, or the specific portion of the Project stated in the document, shall be at the sole risk of the user, and without liability to PB for any losses or injuries arising from such use.

System Level Technical and Integration Reviews

The purpose of the review is to ensure:

- Technical consistency and appropriateness
- Check for integration issues and conflicts

System level reviews are required for all technical memoranda. Technical Leads for each subsystem are responsible for completing the reviews in a timely manner and identifying appropriate senior staff to perform the review. Exemption to the System Level technical and integration review by any Subsystem must be approved by the Engineering Manager.

System Level Technical Reviews by Subsystem:

Systems:	*Signed document on file* Rick Schmedes	08 July 11 Date
Infrastructure:	*Signed document on file* John Chirco, PE	07 June 11 Date
Operations & Maintenance:	*Signed document on file* Joseph Metzler	10 Nov 11 Date
Regulatory Approvals:	*Signed document on file* Vladimir Kanevskiy, PE	22 Jun 11 Date
Rolling Stock:	*Signed document on file* Frank Banko	09 Jun 11 Date
Project Management Oversight:	*Signed document on file* Michael D. Lewis, PE	03 Jun 13 Date

TABLE OF CONTENTS

ABSTRACT 1

1.0 INTRODUCTION 2

1.1 PURPOSE OF THE TECHNICAL MEMORANDUM 2
1.2 STATEMENT OF TECHNICAL ISSUE 2
1.2.1 Definition of Terms 3
1.2.2 Units 4

2.0 BASIS OF DESIGN - STANDARDS AND GUIDELINES 5

2.1 GENERAL 5
2.2 LAWS AND CODES 5
2.3 APPLICABILITY TO FEDERAL REGULATIONS 5

3.0 ASSESSMENT / ANALYSIS 6

3.1 BACKGROUND 6
3.1.1 Prior Assessment 6
3.1.2 International Shared Rail Corridor Practices 7
3.2 DESIGN CONSIDERATIONS – CONVENTIONAL RAIL 8
3.2.1 U.S. Freight Railroad Corridors 8
3.2.2 Derailment Considerations 9
3.2.3 At-Grade Track Separation Between Adjacent Rail Systems 10
3.2.4 Pier Protection for Grade Separated Rail Systems 13
3.3 DESIGN CONSIDERATIONS FOR HIGH-SPEED RAIL 13
3.3.1 High-Speed Rail Corridors 13
3.3.2 High-Speed Train Set Characteristics 13
3.3.3 Derailment Incidents 14
3.3.4 Derailment Considerations 16
3.3.5 Containment of HST 16
3.4 PROTECTION BETWEEN HST AND HIGHWAY VEHICLES 20
3.4.1 Background 20
3.4.2 FRA Guidance 20

3.4.3 CURRENT PRACTICES 21

Summary 24
3.4.4 Clearances and Roadside Protection 24
3.4.5 Vertical Clearance Requirements 26
3.4.5.1 HST Over Highways/Roadways 26

4.0 SUMMARY AND RECOMMENDATIONS 27

4.1 INTRUSION OF CONVENTIONAL RAILROAD CARS INTO HSR OPERATIONAL CORRIDOR 27
4.2 INTRUSION OF HIGH-SPEED TRAINS INTO OTHER OPERATIONAL TRANSPORTATION CORRIDORS 27
4.3 INTRUSION OF HIGHWAY VEHICLES INTO HST OPERATIONAL CORRIDOR 28

5.0 SOURCE INFORMATION AND REFERENCES 29

6.0 DESIGN MANUAL CRITERIA 30

6.1 INTRUSION PROTECTION 30
6.1.1 Protection of HST Operating Infrastructure from Intrusion 30
6.1.2 Containment of Conventional Trains 30
6.1.3 Containment of HST Trains 31
6.1.4 Separation Distance between HST and Adjacent Railroads 31
6.1.5 Pier Protection for Grade Separated Projects 32
6.1.6 Containment of Highway Vehicles 32

APPENDIX A 33

A.1 INTRUSION PROTECTION SCHEMATIC DRAWINGS 33

ABSTRACT

The California High-Speed Train System (CHSTS) will operate adjacent to, in close proximity, or within a right-of-way with other transportation systems at locations along the high-speed train (HST) alignments. These transportation systems include passenger railroads, freight railroads, and highways/roadways. HST operation within shared rights-of-way is a safety issue for both the CHSTS and the existing transportation systems. Identification and mitigation of the risk of intrusion will allow the high-speed trains to operate safely adjacent to existing transportation systems.

The purpose of this technical memorandum is to review current requirements and practices by other operators and to provide a basis of design for the safe separation of HST line from adjacent transportation systems in order to:

- Prevent errant railroad or highway vehicles from an adjacent or overhead facility from intruding into the HST facilities and its operating space
- Prevent a derailed high-speed vehicle from intruding into the operating space of an adjacent railroad or highway
- Prevent a derailed high-speed vehicle from falling from an elevated track
- Evaluate proposed HST lines located adjacent to or in proximity of right-of-way of passenger railroads, freight railroads, and highways in order to determine the level of exposure. Site-specific considerations will be required to assess the appropriateness for intrusion protection.

The basis of design for intrusion protection will include, but not be limited to, a review and assessment of the following:

- FRA and AREMA guidelines regarding separation and protection of adjacent transportation systems and conventional railroads
- 49CFR Part 213 Section 316 for protection of the right-of-way for Class 8 and 9 tracks
- California Department of Transportation (Caltrans), Highway Design Manual and Standard Plans
- DOT/FRA/ORD-95/04 Report entitled, “Safety of High-Speed Guided Ground Transportation Systems, Intrusion Barrier Design Study” (November 1994) for applicability to CHSR issues
- DesertXpress Highway Interface Manual
- Intrusion protection measures used on high-speed rail systems in Europe and Asia
- Other applicable published studies regarding the safe separation and intrusion protection for high-speed trains systems and adjacent transportation systems

Issues associated with operation of high-speed trains sharing track with passenger railroads, including operational and regulatory requirements, will be addressed in separate documents.

Access control and intrusion into the HST right-of-way by pedestrians or wildlife, livestock, or other objects is not addressed in this memorandum and will be addressed in separate documents. Intrusion detection and safety and security aspects of the CHSTS will be covered in separate documents.

1.0 INTRODUCTION

The proposed HST system will operate adjacent to or within the right-of-way of other transportation systems at several locations along the alignment. These transportation systems include passenger railroad lines, freight railroad lines, and state or local highways/roadways. At these locations, assessment will determine the need for intrusion protection for the respective modes and services. Hazard analyses, risk assessment, and implementation of appropriate mitigations to reduce the potential for intrusion will allow the HST to safely operate in proximity to existing transportation systems.

This technical memorandum introduces a discussion on potential intrusion hazards that may exist as a result of shared right-of-way, particularly as the intrusions pertain to the HST alignment and vehicles. This document is intended for use in discussion with the FRA, CPUC, Caltrans and other regulatory entities regarding the requirements for separation between high-speed train alignments and adjacent railroads or highways/roadways.

1.1 PURPOSE OF THE TECHNICAL MEMORANDUM

The purpose of this technical memorandum is to assess current practices for separating high-speed train lines from adjacent transportation systems, including passenger and freight rail tracks, and highways/roadways, and to define the HST basis of design requirements needed for the development of the preliminary design.

In this memo, intrusion protection is considered with regard to the potential for derailed or errant vehicles and their cargo to enter into the operating space of another transportation system's right-of-way. This memorandum is intended to serve primarily as the basis of the CHSTS track, earthwork, and structural design.

1.2 STATEMENT OF TECHNICAL ISSUE

HST alignments adjacent, above, or below other transportation facilities pose a potential intrusion hazard. If a passenger or freight railroad vehicle intrudes into the HST corridor, there could be a collision and damage to HST vehicles, track and the operating infrastructure. There is the potential for collision and/or disruption to operation of another transportation system if a high-speed rail vehicle intrudes into that system's right-of-way. Additionally, there is the potential for an intrusion caused by an errant automobile or truck entering into an adjacent HST right-of-way.

This memorandum considers four operating scenarios:

1. Intrusion of a derailed freight railroad car into the operating space of the HST.
2. Intrusion of a derailed freight car and damage to HST piers that support elevated HST structures.
3. Intrusion of a derailed HST vehicle into the operating space of an adjacent freight railroad line, passenger railroad line, or a highway.
4. Intrusion by an automobile or truck leaving a roadway and entering the HST operational right-of-way.

The information in this memorandum will serve as the basis for the CHSTS establishing a minimum distance between adjacent tracks and may include the introduction of a barrier or other protection elements to reduce the risk of derailment and prevent derailed vehicles from intruding into the operating space of an adjacent transportation facility or intrusion by trucks or automobiles into HST facilities or operational space.

1.2.1 Definition of Terms

The following technical terms and acronyms are used in this document and have specific connotations with regard to the HST system.

Barrier	A device intended to contain or redirect an errant vehicle by providing a physical limitation through which a vehicle would not typically pass.
Barrier Offset	The lateral distance from the face of the barrier to the centerline of the track, trackside, or other roadside feature.
Check Rail	The guiding rail located between the two running rails, which functions to maintain a derailed wheel within the track structure.
Containment	Engineered structure (steel, concrete, or earthworks) designed to maintain a vehicle within a defined area.
Containment Curb	Low concrete structure that maintains a derailed train into a guided way by maintaining its wheels inside a defined area.
Dedicated Corridor	Segment along the CHSTS alignment where high-speed trains operate on tracks that are exclusive of other passenger or freight railroads.
Guard Rail	A short guidance rail in the track. When a wheel passes over a switch frog in a non-guided section, the opposite wheel is guided by the guard rail, which acts on the back of the wheel flange.
Intrusion	Entry of errant vehicles, goods, objects and people into the operating space of HST or other transportation system.
Intrusion Detection	An electronic system that alerts Central Control and Train Operations of an intrusion event.
Intrusion Protection	Physical structure or space that prevents errant vehicles, goods, objects and people from entering into a protected area.
Operating Envelope	A zone delineated by HST tracks and OCS.
Operating Infrastructure	HST infrastructure that is required for the operation of HST. (This includes infrastructure within the operating envelope plus any HST facilities such as TP facilities, wayside power cubicles, train control rooms, communication rooms, cable troughs, etc.).
Shared Corridor	A portion of high-speed rail alignment where the high-speed trains operate on their own dedicated tracks parallel to and in the vicinity of other transportation systems such as highways, passenger railroads, or freight railroads.
Shared Rail Corridor	A type of Shared Corridor in which the other transportation systems are other railroads which may include passenger and freight service.
Shared Track	A track designated in the operating rules for the operation of both the high-speed trains and other passenger or freight trains. Shared Track shall have time separation between the hours of operation of the passenger or freight trains and the high-speed trains (temporal separation). *Sometimes referred to as Shared Use Track.*

Acronyms

49 CFR	Code of Federal Regulations, Part 49
AAR	Association of American Railroads
AREMA	American Railway Engineering and Maintenance-of-Way Association
Authority	California High-Speed Rail Authority
Caltrans	California Department of Transportation
CHSTS	California High-Speed Train System
CPUC	California Public Utilities Commission
CTRL	Channel Tunnel Rail Link
CRZ	Clear Recovery Zone
ETW	Edge of Traveled Way
FRA	Federal Railroad Administration
GO	General Order
HST	High-Speed Train
ROW	Right-of-Way
SHS	State Highway System
SNCF	Société Nationale des Chemins de fer Français (French National Railway Company)
UIC	Union Internationale des Chemins de fer (International Union of Railways)

1.2.2 Units

The California High-Speed Train System is based on U.S. Customary Units consistent with guidelines prepared by the California Department of Transportation and defined by the National Institute of Standards and Technology (NIST). U.S. Customary Units are officially used in the United States, and are also known in the U.S. as “English” or “Imperial” units. In order to avoid confusion, all formal references to units of measure should be made in terms of U.S. Customary Units.

2.0 BASIS OF DESIGN - STANDARDS AND GUIDELINES

2.1 GENERAL

The basis of design will generally follow the standards and recommended practices described in the Manual for Railway Engineering of the American Railway Engineering and Maintenance-of-Way Association (AREMA). AREMA practices will be considered with regard to design standards developed specifically for the construction and operation of high-speed railways based on international practices. For intrusion from highways/roadways and protection of highway motorists, the general basis of design will follow FRA recommendations and Caltrans standards as prescribed in the Caltrans Highway Design Manual (HDM).

2.2 LAWS AND CODES

The development of the basis of design for intrusion protection was based on a review and assessment of available information, including the following:

- FRA guidelines regarding the separation and protection of adjacent transportation systems and conventional railroads
- 49 CFR Section 213.316, protection of the right-of-way for Class 8 and 9 tracks
- The Manual for Railway Engineering of the American Railway Engineering and Maintenance-of-Way Association (AREMA) Manual
- California Department of Transportation (Caltrans) Highway Design Manual
- California Public Utilities Commission General Orders
- Technical Guidebook GEFRA 2004: technical guidance from National French Railways about twinning between high-speed train and road or highway infrastructures
- UIC Code 777-2: 'Structures Built over Railway Lines – Construction in the Track Zone', this code identifies a 'danger zone' within proximity of the rail, inside which it is preferable to avoid having supports

In the case of conflicts in the various requirements for design, the standard followed shall be that which results in the highest level of conformance for all requirements or that is deemed as the most appropriate by the Authority and as required for securing regulatory approval.

2.3 APPLICABILITY TO FEDERAL REGULATIONS

The Federal Railroad Administration (FRA) has the responsibility to provide safety oversight for High-Speed Rail (HSR) in the United States. FRA's current safety regulations for railroads are published in 49 Code of Federal Regulations (CFR) sections 200 through 299. The Railroad Safety Advisory Committee (RSAC) Task Force-II is working to establish equipment standards up to 220 mph that will also allow for intermixing with conventional equipment under Tier I conditions which will supersede the Operating Tiers described in High-Speed Passenger Rail Safety Strategy (HSPRSS) published by FRA in November of 2009. FRA's guidelines for operations in shared corridors are discussed in sections below and their recommendations to protect HSR corridor and other transportation corridors are followed. Updates to FRA's regulation regarding safety regulations for railroads will be reviewed and applicable regulations will be included in future versions of this TM or other project documents as appropriate.

3.0 ASSESSMENT / ANALYSIS

The assessment conducted for the CHSTS will focus on four potential intrusion scenarios:

1. Intrusion of a derailed freight or conventional railroad car into the HST operating space.
2. Intrusion of a derailed freight car and damage to HST piers that support elevated structures.
3. Intrusion of a derailed HST vehicle into the operating space of an adjacent freight railroad line, passenger railroad line, or a highway.
4. Intrusion by an automobile or truck leaving a roadway and entering the HST operational corridor and damaging HST operating infrastructure such as elevated structure piers.

This analysis assesses the design considerations associated with intrusion protection, the intrusion protection practices of other operating HSR systems, and recommends an approach and use specific intrusion protection elements for the high-speed train, conventional rail, and adjacent highway facilities. This analysis also considers examples of potential causes and effects of derailments, and offers approaches to mitigate the risk of occurrence and the associated potential for intrusion.

3.1 BACKGROUND

3.1.1 Prior Assessment

USDOT/FRA's study on intrusion protection *(Safety of High-Speed Ground Guided Transportation Systems (SHSGGTS) Intrusion Barrier Design Study, November 1994)* provides insight into considerations for intrusion protection. In particular, during travel at lower speeds, conventional trains generate greater forces on a barrier than high-speed trains (HST vehicles are lighter). Also, a barrier placed closer to the track results in lower forces than a barrier placed further away (a closer barrier will help deflect the train car along the corridor rather than absorb the energy from a more direct impact). This study used computer analyses to evaluate three types of barrier systems: earth barriers, structural barriers, and various combinations of earth and structural barrier scenarios. A summary of the barrier systems assessed in the report follows.

Earth Barriers. Earth barriers and ditches were assessed for use as intrusion barriers in prior studies conducted for the FRA. One study concluded that the assessed earthwork berm and ditch barrier system was not a well-suited barrier for high-speed systems, primarily because of the large kinetic energy associated with a vehicle traveling at 200 mph (320 kph), which would require either high berms, long unobstructed stopping distances, or a combination of the two to effectively stop a high-speed vehicle. (SSHGGTS, November 1994, page xvi).

Structural Barriers. Structural barriers prevent derailed vehicles from leaving their protected corridor, or from entering an adjacent protected corridor, and redirect the derailed vehicle back into its own corridor and/or right-of-way. Structural barriers are typically not designed to slow vehicles- rather, these barriers serve to contain a rail vehicle and rely on friction between the train and the track infrastructure within the high-speed corridor to gradually bring the high-speed vehicle to a stop.

Analyses of structural barriers under varying loads and speeds performed for the SSHGGT study concluded that loads from conventional freight trains yield loads higher than those of high-speed trains. Higher impact loads are observed at lower derailment speeds, in the range of 75 to 100 mph (120 to 160 kph). At high speeds, train cars rebound from the barrier, continue in the original direction of travel without additional contact with the barrier, and slow to a stop. In this case, a conventional train may stop in a shallow 'zigzag' or accordion pattern. Under certain conditions with specific trainset technology, a high-speed trainset will remain in a straight line along the tracks. Dual barriers, installed on both sides of the corridor, experience the highest impact loads due to the tendency of train cars to get wedged between the two barriers and pushed into the barriers by following cars. (SHSGGTS, November 1994, page xvi).

Vehicle Damage. Computer analyses demonstrated that HST vehicle damage sustained during a derailment is expected to be minor. The subject train generally remains in a straight (longitudinal) line with little lateral movement. This is consistent with the observations of actual high-speed derailments. (USDOT/FRA – See Section 5.0, reference number 3).

Passenger Safety. Passenger safety during a derailment is measured by determining the expected acceleration of the vehicles and comparing these values to the threshold limits accepted by the automobile industry. The SHSGGTS study concluded that passenger safety during HST derailment and barrier impact is at an acceptable level, except in the case of the dual barrier condition. (USDOT/FRA – See Section 5.0, reference number 3).

3.1.2 International Shared Rail Corridor Practices

This section summarizes current practices on operating HSR systems where tracks are located adjacent to freight or passenger railways. Generally, earth berms and ditches, as well as barriers, are used for intrusion protection where a hazard analysis and risk assessment have identified the need for mitigation. Containment systems such as check rails, parapets, containment curbs and physical barrier systems are used to reduce the risk of derailment.

Taiwan. Generally, HST lines and conventional freight lines in Taiwan are not located adjacent to one another. There are a total of three sections where Taiwan Railway (TRA) and HSR tracks are adjacent without an intervening wall: one on each side of Taipei Station in the underground section, and the third is just north of the HSR southern terminal at Tsoying Station.

- Taiwan Railway through Taipei Station: There are two sections in the Taipei Station vicinity without an intermediate wall between the high-speed and the conventional railroad, one each side of the station. There is no wall through the station, but there is a row of columns between the nearest HSR track and the nearest TRA track (a freight bypass track). Approximate speed is 37 mph (60 km/h). TRA train volume is approximately 290 passenger trains and possibly 10 to 20 freight trains per day.
- The two open sections: The section west (railroad south) of the station is approximately 1000 feet (305 m) long and is located on a curve where the TRA speed limit is 40 mph (65 km/h) and the HSR speed limit is 43 mph (70 km/h). The section east (railroad north) of the station is approximately 1500 feet (457 m) long. The speed limit is 37 mph (60 km/h) for both railroads.
- In addition, there is a section at the south end in approach to Tsoying station where the tracks are parallel and close. Track separation is about 20 to 30 feet (6 to 9 m) between track centers, with a fence between tracks. This section is about 3000 feet long (915 m) and the speed limit is 87 mph (140 km/h) on the HSR side and 68 mph (110 km/h) or 75 mph (120 km/h) on the TRA side. Since this section is in approach to Tsoying Station, the speeds of many trains are lower. Approximate TRA freight train speed limit is 50 mph (80 km/h). HST count on the Taipei end is 148 on weekdays and 154 on weekends and two less each (weekday/weekend) on the Tsoying end. TRA train volume is approximately 144 passenger trains and approximately 10 freight trains per day.

TRA passenger train counts are from a schedule dated June 2006.

France. There are several cases of parallel HST and freight operations in France, in particular on the Atlantic TGV:

- Between Auneau and Bonneval, approximately 25 miles (40 km). No specific intrusion protection measures were built. This line carries nine passenger trains and four freight trains per day. Line speeds for passenger and freight trains are 62 mph (100 km/h) and 50 mph (80 km/h), respectively. Safety fences were installed along the entire HST line to control access, prevent trespassing, and avoid inadvertent entry by railway staff.
- Figure 3.1-1 illustrates a segment of the Atlantic TGV, where the separation between HST and an adjacent freight track centers is approximately 40 feet (12 m) and varies based on the respective elevation of the tracks. Additional consideration is warranted for tracks on embankments (when the freight track is higher than the HST track) and curves (when the freight track is inside of the HST track). Earth ditches and mounds were constructed in conjunction with a horizontal offset to prevent a derailed freight train from reaching the high-speed tracks. This offset is about one-half of a car length (car body lengths vary up to approximately 89 feet) and is based on the observation that freight trains often zigzag, like an accordion, during derailment. This results in cars straddling the track, typically with half of their length on either side of the track.

The two tracks on the right side of Figure 3.1-1 are HST tracks between Paris and Le Mans (under construction at the time of photo); the single track on the left is a parallel line that is used for regional passenger and heavy freight.

United Kingdom. The CTRL (Channel Tunnel Rail Link) runs parallel to a railway line from Ashford to the Channel Tunnel and in the Rainham area.

- The CTRL risk approach is based on the high quality of the operating infrastructure, its maintenance, and protection against vandalism. It also considers the fact that modern vehicle designs are less prone to derailment. Based on a risk analysis, the CTRL considers only specific areas for derailment containment. These include long or high bridges and structures where an incident could affect the structural integrity or cause a distortion of the track. The CTRL guidance considers three options for derailment containment: a continuous check rail, guard rails, and robust containment parapets on bridges and in tunnels.

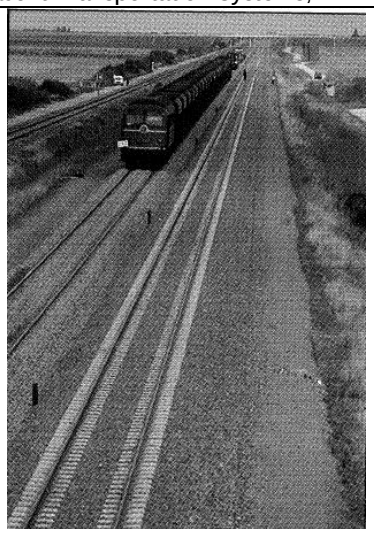

Figure 3.1-1 - HST Tracks Adjacent to Freight / Passenger Tracks

3.2 DESIGN CONSIDERATIONS – CONVENTIONAL RAIL

3.2.1 U.S. Freight Railroad Corridors

Prior studies have evaluated the feasibility of constructing HST lines within a freight railroad corridor and identified the following significant design issues and/or challenges:

Narrow Right-of-Way. Freight railroad corridors are generally constructed within a 100-foot right-of-way with tracks that are centered between the property limits. The right-of-way width is usually sufficient to construct the earth embankments that provide relatively flat grades through rolling terrain. The right-of-way may provide space to add additional tracks as service grows. However, in many urban areas, the original 100 feet has been reduced over the years to provide for other uses.

The addition of high-speed tracks, particularly in areas with terrain variation, may require retaining walls for cuts and fills or additional property to accommodate embankment and cut slopes.

Alignments Designed for Shared Passenger and Freight Rail Service: While many railroads were originally constructed to provide shared passenger and freight service, most intercity rail passenger service has diminished to the corridors and lines operated by Amtrak. Except for the Northeast Corridor (between Boston, MA and Washington DC), the Caltrain Corridor between San Francisco and San Jose, certain rail lines in the vicinity of Chicago, and the LOSSAN corridor in Orange and San Diego Counties (in California), service typically operate on tracks owned and controlled by the freight railroads. The reintroduction of, or increases in, passenger service present challenges and potential liabilities for freight railroads. This is heightened by the infrastructure and operational needs of high-speed rail in freight corridors which already have high service volumes.

Rail Track Spurs and Sidings: While sufficient space may exist within a 100-foot right-of-way to construct freight and passenger main tracks, the requisite turnouts, spurs, sidings and other facilities pose additional constraints on the placement of new passenger rail tracks. The introduction of high-speed trains may require the relocation of existing freight tracks from the center of the right-of-way. Alternatively, additional right-of-way must be acquired from adjacent land owners.

Frequent Highway Grade Crossings: Grade crossings for both public and private roadways pose additional constraints. While many urban areas have constructed grade separations, the majority of suburban and rural railroads operate at-grade through the adjacent communities. The CHSTS anticipates full grade separation of high-speed rail tracks.

Case Study: In 2001, the Florida High-Speed Rail Authority (FHSRA) discussed the use of CSX-owned property for high-speed rail alignments on the corridor between Tampa and Orlando. CSX indicated that it would consider selling a portion of its property for the project, provided that the system was constructed on separate tracks, was fully grade separated, did not interfere with freight operations, and preserved a two-track freight system (with tracks realigned as necessary). It was agreed that the track center spacing between the high- speed rail and freight rail would not be less than 25 feet (7.6 m). SOURCE: *Florida High Speed Rail Authority Technical Report*, February 4, 2002.

3.2.2 Derailment Considerations

In the case of conventional trainsets (freight and passenger cars), "accordions" or “zigzags” result when a car is derailed and the following cars are forced to dissipate their energy. Since the trains are composed of rail cars which are structurally rigid and not designed to crush and absorb energy, cars derail and plow off of the track structure. The cars continue straight along the track axis with one car turning one way and the following car turning the other way resulting in the accordion pattern of derailed cars. As shown in Figure 3.2-1, the actual effect of a derailment is subject to a variety of site conditions including curvature and topography.

Figure 3.2-1: Derailment of Freight Train

Figure 3.2-1 illustrates that when the railroad track bed is higher than the adjacent ground (right), the train cars typically deflect far from the track (approximately two car-lengths here). Conversely, level ground (left) leads to a much smaller displacement (about half a car length in this case).

Separation distances or barriers can be used to minimize the risk of intrusion into the HST corridor by a derailed conventional railroad car. The hazard analysis and risk assessment used to determine appropriate protections must consider the vertical attributes of the railroad in relation to other infrastructures and the risk of derailment in the subject area.

3.2.3 At-Grade Track Separation Between Adjacent Rail Systems

The separation distance between the closest HST line and adjacent rail infrastructure is critical in identifying the level of intrusion risk and defining appropriate mitigation measures. By providing separation of facilities, HST infrastructure can remain operational in the case of a derailment on the conventional rail line, thereby maintaining high-speed train operations. The area considered as the HST Operating Infrastructure, which must remain clear in order for HST operations to continue, is shown in Figure 3.2-2.

The following sections discuss distance ranges to be applied for separating tracks and the appropriate type of intrusion protection for each location (where determined by the hazard analysis, risk assessment process). These recommendations also apply for the protection of HST viaduct piers that are located adjacent to conventional rail lines. All distances are measured between the centerlines of the closest track of each system. These recommendations do not include right-of-way considerations that may introduce additional separation requirements.

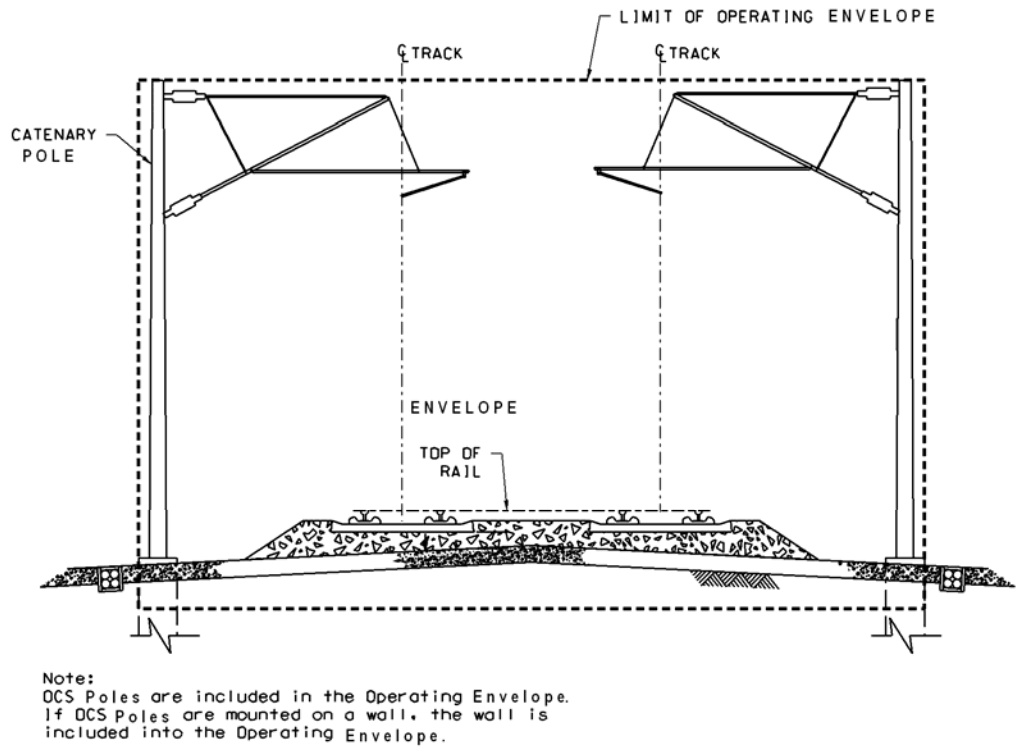

Figure 3.2-2: Limit of Operating Envelope

3.2.3.1 Minimum Distance between Track Infrastructures without an Intrusion Protection Barrier

A minimum distance is established to ensure that a derailed freight train, or any contents or object falling from derailed freight cars, will not encroach into the HST operating infrastructure while traveling on level grade.

For conventional rail, Chapter 8 of the AREMA Manual, part 2.1.5.1 indicates that "*research by the National Transportation Safety Board found no clear break point in the distribution of the distance traveled from the center line of the track by described equipment. It was therefore decided to retain the existing criteria of 25 ft (7.6 m) distance within which collision protection is required*."

In order to protect the HST operational infrastructure, the minimum separation distance should be increased to include the maximum practical excursion of the longest U.S. freight rail car from the

center of track plus an allowance for protection of the OCS poles. Increased separation distance and intrusion protection measures should be considered based on location-specific risk analysis.

This method establishes the following separation requirements: A car body length of 89 feet for the freight rail car displacement plus an allowance of 12.5 feet offset to include an OCS pole foundation. This results in a minimum separation distance, without an intrusion protection barrier, of 101.5 feet, and rounded to 102 feet.

It is recommended that 102 feet separation be considered as a minimum distance between HST and conventional rail systems to avoid intrusion without the need for any physical element for intrusion protection from rail cars operating on adjacent freight lines.

Providing this separation distance may not always be practical, particularly in developed or urban corridors. In instances where it is not feasible to provide this separation distance, intrusion protection barriers shall be considered.

3.2.3.2 Minimum Distance between Tracks Using an Earthwork Barrier

Large distances between systems or concrete or steel barriers can be costly in terms of right-of-way acquisition or construction. Earthwork barriers are used on other HST systems and provide an additional option for the CHSTS. Earthwork berms require additional separation distances compared to a barrier but maintain passenger views of the surrounding environment due to their lower overall height. Maintaining a high quality passenger experience, such as favorable, attractive, and visual access, has been a major consideration in the development of HST systems operating in Europe.

The earthwork berm is intended to provide 10-foot high protection, which corresponds to approximately one-half the height of a plate H gauge. This height can be equally divided in a berm and a ditch on the side of the freight railroad, if agreeable with the railroad operator, in order to maintain a passenger-friendly view. Otherwise, the berm needs to be 10 feet high. The separation can vary depending on the materials used and how the slope gradient is designed (i.e., natural slope, reinforced earthworks, gabion, etc.). For a berm and ditch combination option, with an engineered earthwork solution, a minimum 30-foot-wide berm and ditch combination with an intrusion detection device on the right-of-way fence can separate the two track infrastructures. In this scenario, a minimum distance of 58 feet (rounded from 57.6 feet) between centerlines of adjacent tracks is needed, as shown on Figure 3.2-3. For a 10-foot high berm, a minimum 26-foot-wide berm with a 6-foot-wide flat area for intrusion protection fence will be required, as shown on Figure 3.2-4. Additional typical cross-sections showing minimum distances between tracks using berms and ditches as intrusion barriers are shown in Appendix A.

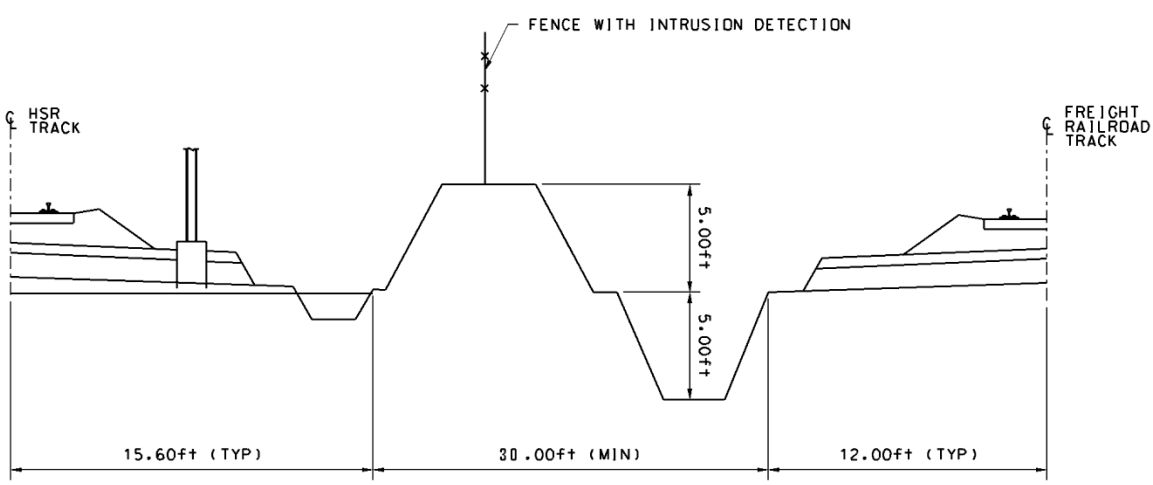

Figure 3.2-3: Separation between Tracks Using Earthwork Berm and Ditch

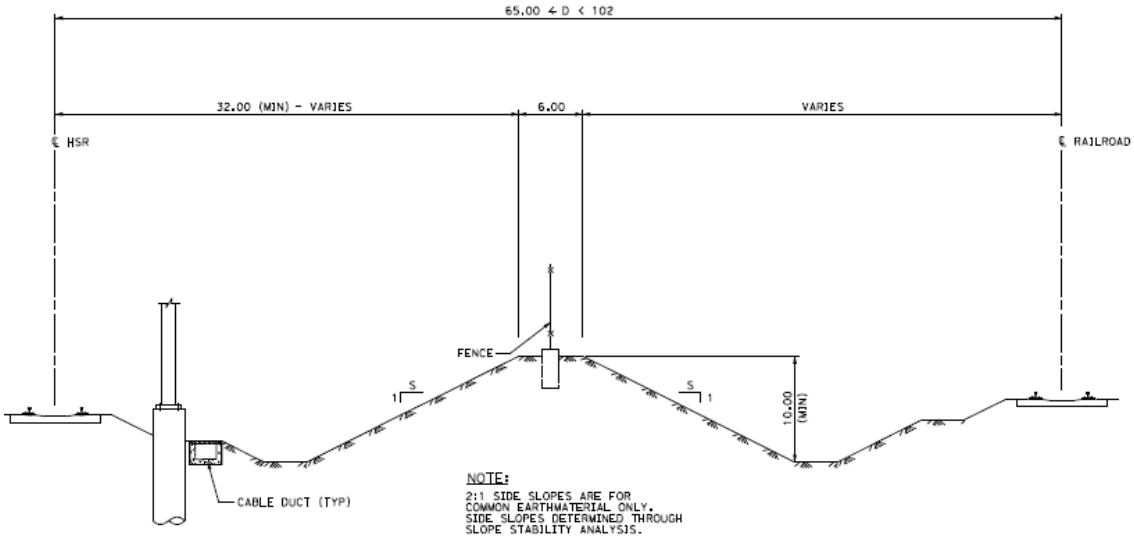

Figure 3.2-4: Separation between Tracks Using Earthwork Berm

3.2.3.3 Minimum Distance between Tracks Using a Physical Barrier

The minimum distance between track infrastructure and a physical barrier must take into account the minimum typical clearance requirements for both railways. For the HST, the minimum clearance from the track center to a continuous obstruction is 19 feet. This allows space for catenary poles and foundations (12.5 feet from track center), cable trough/duct bank (3 feet), closed drainage system (2.5 feet), and other HSR operating infrastructure (1 foot). Freight railroads typically require a minimum of 9 feet along a tangent alignment, but generally provide a minimum 12-foot clearance to adjacent isolated structures. For preliminary design, a minimum of 25 feet from the centerline of the closest railroad track to physical barrier should be provided. Barriers placed in railroad right-of-way requires prior approval from the railroad, Therefore, a nominal minimum distance of 47 feet, between closest tracks, has been established for planning purposes. This distance is the sum of the minimum 19-foot clearance requirements for the HST operating infrastructure plus a 3-foot allowance for an intrusion barrier wall and a 25-foot offset to the centerline of the conventional railroad. The height of the barrier wall shall not be less than 10 feet which is half of the height of the plate H gauge. Assessment of risk at specific locations and further development of HST standards may further reduce the minimum distance requirements for highly-constrained sections of the HST corridor.

It is recommended for planning purposes that a minimum separation of 47 feet, including provision for a physical barrier, be provided between the centerlines of adjacent HST and conventional rail lines. This distance is the sum of the minimum clearance requirements for the HST operating infrastructure (12.5 feet); plus a protected walkway/cable trough combination (3.0 feet); a closed drainage system (2.5 feet); clearance to the barrier wall (1 foot); a 3-foot allowance for an intrusion barrier wall; plus a minimum offset to the centerline of the conventional railroad (25 feet). This recommendation considers physical separation and does not include right-of-way considerations, which may introduce additional separation requirements.

3.2.3.4 Application of Track Separation and Intrusion Protection

A range of separation distances with the associated protection of HST operational infrastructure follows. Distances are measured from the centerline of the closest tracks of the freight line and the high-speed line.

- Intrusion protection is not required for tracks with centerlines separated by 102 feet or greater
- Intrusion protection is not required if HST operating envelope is 10 feet or higher above conventional railroad track. If the 10-foot height elevation differential is attained by HST being on a retained filled and if the nearest centerline separation is less than 102 feet, additional protection for retained fill structure may be required
- Earthwork berm/ditch combination can be used as intrusion protection for tracks with centerline separation of 58 feet or greater if the berm/ditch is constructed within the conventional railroad right-of-way with the concurrence of the railroad company. Earthwork berm or a berm/ditch combination within HST right-of-way can be used as intrusion protection for tracks with centerline separation of 85 feet or greater. Earthwork berm, split between HST and conventional railroad right-of-way, or ditch within HST right-of-way can be used as intrusion protection for tracks with centerline separation of 76 feet or greater.
- Where right-of-way is constrained, a minimum 50-foot separation (37-foot with railroad approval) is required between centerlines of the HST and adjacent conventional railroad track and requires an intrusion barrier wall for at-grade sections.
- The absolute minimum offset to any obstruction is defined by each operator plus the width of the intrusion protection.

Intrusion protection, if required, is designed in conjunction with the hazard analysis and risk assessment process to verify the necessity of the physical barrier as an effective mitigation.

3.2.4 Pier Protection for Grade Separated Rail Systems

AREMA (Chapter 8, Part 2, 2008) recommends that the minimum offset between a pier and the closest track shall be 25 feet. If this distance cannot be accommodated, a crash wall to protect the piers shall be installed.

3.3 DESIGN CONSIDERATIONS FOR HIGH-SPEED RAIL

3.3.1 High-Speed Rail Corridors

HST systems require a high-quality track infrastructure, constantly supervised operations, and superior maintenance in order to maintain track quality. Risk of track obstruction due to vandalism is limited due to the strict control of access to the HST right-of-way. Historical data from existing HST systems in Europe and Asia indicate that the integrity of rail infrastructure and precision of the train control, which are designed in conjunction with the train sets, results in a low frequency and reduced severity for derailments. In this way, system design, maintenance, and performance of rolling stock are a fundamental component of the intrusion protection system. Intrusion protection measures could be planned at specific high-risk locations to protect other transportation facilities from HST derailment.

3.3.2 High-Speed Train Set Characteristics

This section summarizes the key design characteristics of modern high-speed trains and how the design approach reduces the risk for intrusion of HST into adjacent transportation facilities.

3.3.2.1 Vehicle Type and Speed

The specific type of rolling stock for the HST will not be selected prior to the completion of the 30% Design level. This document's guidelines are intended to accommodate the operational needs of the HST without precluding any high-speed vehicle technology.

3.3.2.2 Articulated / Non-Articulated Vehicles

HST technology uses two different methods to join coaches and locomotives. Trainsets are either articulated or the elements are linked by couplings. TGVs and the latest generation of AGVs (designed by Alstom and the SNCF) are the only articulated models currently in service. ICE (Siemens), Shinkansen (Hitachi), ETR (Fiat) and AVE (Bombardier – Talgo) are trains with couplings.

On a conventional train, the two bogies (axles and wheels) are situated beneath the cars, and below the seats of the passengers. The cars are linked by couplings. On an articulated train, bogies are placed between individual cars. This greatly decreases vibration and rolling noise, as the links between cars absorb almost all of the movement between them. Moreover, interdependent cars add rigidity to the train set. In the event of a derailment, the train set stays intact and does not lose its shape. Non-articulated trains could potentially respond with the "accordion" effect. Nevertheless, the European technical specification for interoperability (TSI) requires that train sets incorporate crash energy management designs that include provisions for resisting over-riding of the cars within the train set. These design elements will contribute to the mitigation of the “accordion effect” and will be further addressed in the hazard analysis and risk assessment process.

3.3.2.3 Trainset Stiffness

Study of crash management, crash worthiness and structural integrity of HST trains is under review by FRA. Tier III requirements for HSR trainsets are being developed by the FRA RSAC Engineering Task Force (ETF).

3.3.3 Derailment Incidents

Five incidents of HST derailment are summarized below:

1. On 21 December 1993, a TGV train derailed at “Albaincourt Pressoir” on the northern French TGV due to a settlement of the track. The train was traveling at a speed of 183 mph (294 km/h). A bogie between two cars derailed. Because of the stiffness of the consist, the lateral movement was very small and no substantial damage resulted. The train came to a stop with no injuries.

2. On 5 June 2000, Eurostar 9047 from Paris to London derailed near the Croisilles Junction (Northern France, near Arras) as the train was running at 155 mph (250 km/h). Four bogies (out of 24 in the trainset) left the rails due to a connecting rod breaking on a motorized bogie. Few injuries occurred among the 501 passengers.

3. On 23 October 2004, a magnitude 6.6 earthquake led to derailment of a Shinkansen train operating at 125 mph (200 km/h). There were no serious injuries despite the fact that eight out of 10 cars derailed. The series 200 train, Toki 325, was carrying 155 passengers between Tokyo and Niigata on JR East's Joetsu Shinkansen line. The slab track maintained the train up and in line.

4. On 3 June 1998, an Inter City Express (ICE) train traveling 125 mph (200 km/h) derailed in Eschede, Germany causing the death of 98 people and injuring another 103. Several kilometers before the accident, the steel tire on the wheel of the car immediately behind the locomotive fractured. The broken wheel then jammed in a turnout, resulting in a longitudinal force that broke the coupling between this car and the locomotive. This caused the rest of the train cars to derail. The lateral movement was considerable and a bridge pier was demolished. This led to the collapse of the bridge which caused most of the casualties when the bridge fell on the train.

5. On 4 March 2010, a 6.4 earthquake occurred in Taiwan causing considerable damage to the Taiwan High Speed Rail Corporation (THSRC) infrastructure in the vicinity of Tainan. The earthquake caused a derailment of a train that was traveling close to its maximum speed of 300 km/h (186 mph) with no fatalities and only minor injuries. The undercar brake assembly of the derailed wheelset pressed against the running edge of the west rail and laterally loaded the rail causing the movement of the baseplate direct fixation assembly. The west wheel of the derailed set rode on the west edge of the concrete J-slabs causing spalling of the concrete slab. The speed of the derailed trainset, and the impact on the J-slab openings was so great that the wheelset jumped, impacting alternating J-slabs. While the west rail was affected by the derailed wheelset, the east rail wall was unaffected and remained in alignment.

Incident 1 is an example of a limited derailment in which the trailing wheel of the derailed axle(s) stayed between the rails. Incidents 2, 3 and 4 are examples of full derailment which are much rarer. In incident 4, a turnout contributed to the escalation from a limited derailment to a full derailment. In general, a major event is required to trigger such a catastrophic escalation. Incident 5 shows containment of a derailed high-speed trainset that remained within its trackway after an earthquake.

3.3.4 Derailment Considerations

Derailments have been investigated by railways worldwide for many years. Examples of causes and potential solutions include:

- Flange climbing: The relation of lateral flange force to vertical wheel load has a major influence on flange climbing. Any vehicle or track property which reduces the wheel load or increases the lateral flange force, either momentarily or permanently, could lead to flange climbing and even derailment. These factors are taken into consideration in the design and construction of the HST and when choosing the HST rolling stock.
- Gauge spread, settlement of the track, and/or other damages, such as a broken rail, can also contribute to a derailment. These conditions are mitigated by maintaining rigid standards for the HST design and maintenance.
- Mechanical failure of a component of the train's running gear could allow a wheel to jump over the rail. The accident that occurred on 3 June 1998, in Eschede, Germany, was due to the damage of the steel tire on a wheel.
- A longitudinal shock to the train can lift it clear of the rail. This could be caused by a collision with an obstruction on the track or damage to the running gear which causes a wheel to suddenly jam. Intrusion protection and a high level of maintenance can lower the risk of these occurrences.

Historical information from existing HST systems indicates that HST derailments occur as a result of infrastructure failures including, track, structure, earthworks, and/or rolling stock, or, due to objects obstructing the line (e.g., vandalism).

Maximizing safety and reliability and managing derailment risks (and other program risks) on the HST system will be achieved by:

- Developing design standards and building infrastructure to the appropriate design standards
- Maintaining infrastructure, systems, and rolling stock at the highest appropriate level
- Monitoring track access conditions

The highest applicable standard of design for track, earthworks, drainage, and structures reduces derailment potential. The vertical clearance of bridges over roads will be per Caltrans clearance requirements to avoid the likelihood of bridge impact from oversized vehicles. Bridge piers and supports for other transportation systems will be located a sufficient distance from the HST running line, so that they are less likely to be affected by a HST derailment. Similarly, HST bridges over roads and other railways will be designed to withstand impacts from errant vehicle collisions. Parapets on road bridge crossings over the HST will be able to contain vehicles. Although not specifically addressed in this paper, it is noted that the HST will include an enhanced level of security barriers such as intrusion fencing that mitigate the risk of derailment due to vandalism.

3.3.5 Containment of HST

The severity of a train derailment is influenced by whether the affected train remains upright, stays within its operating envelope, and/or the speed at the time of the derailment. The consequences of derailment escalate when a train deviates significantly from its operating envelope, causes a collision with a lineside structure (e.g., bridge overcrossing); falls from a height (e.g., bridge or aerial structure); or, when there is a secondary collision with a train traveling in the opposite direction. Therefore, derailment containment devices will be designed to prevent a derailed train from deviating from within its operating envelope.

The design concept for containing a derailed HST will take into consideration the issues discussed in the prior sections of this report. Additionally, the following basic design elements are to be assumed:

- Lateral movement will be limited so that the train does not attain a high lateral or rotational energy before impact with any protection device.
- Barriers will be designed to withstand quasi-static horizontal loads that are to be transmitted with no substantial damage to the structure it protects.
- Specific intrusion protection measures are expected to be damaged during derailment but will not absorb much of the train's energy.
- The lateral or rotational energy of the train will be absorbed by the train itself, by distortion of the bogie and/or the car or locomotive structure, or by a movement between the bogie and the car or locomotive structure.
- The main kinetic energy of the train is directed along the track and is expected to be absorbed by the train's brakes as it comes to a stop. Some of this energy can be transferred to barriers or other physical structures by friction, but this is comparatively small.

Containment systems, such as check rails, parapets, undercar guard, and alternate barrier systems, are currently used in Europe and are described in the following sections. Implementation of containment systems will be assessed in conjunction with a hazard analysis and risk assessment process, particularly when a high level of intrusion risk is identified at a particular location.

3.3.5.1 HST Containment for At-Grade Alignments

It is preferable to contain the wheels as soon as they leave the rail due to the energy developed by a moving train according to its weight and speed. This keeps the train in line and out of the way of other trains. The configuration of undercar equipment on modern high-speed trains provides a mechanism to keep cars within track right-of-way in case of derailment. For example, in the Shinkansen train derailment in 2004, every car of the train set stopped without large deviation from rails because the lead car life guard prevented the lead car from deviating more than few inches from the track, as shown in photos below.

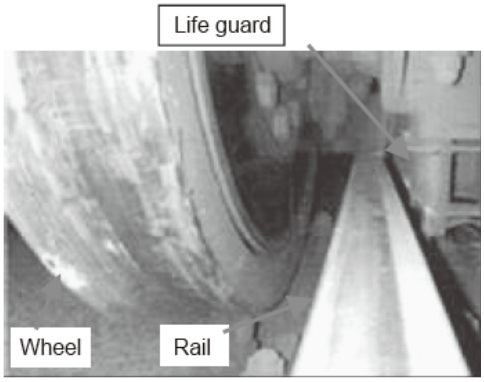

Based on lessons learned from this derailment, the Japanese researchers developed an L-shaped guide that is mounted under the car to prevent large lateral movement of the car from the rails.

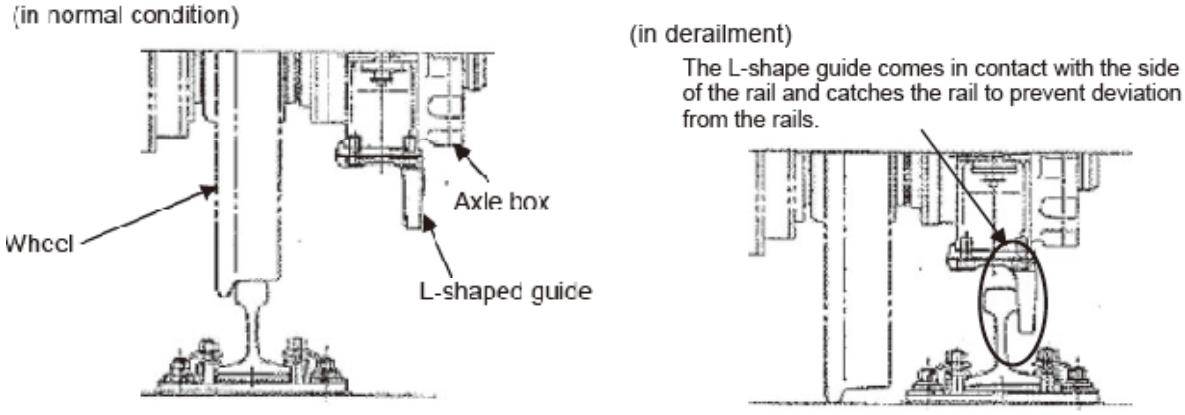

Additionally, the Japanese have developed Plate Springs that are attached to the rail at intervals to prevent rails from toppling over or experiencing large lateral movements.

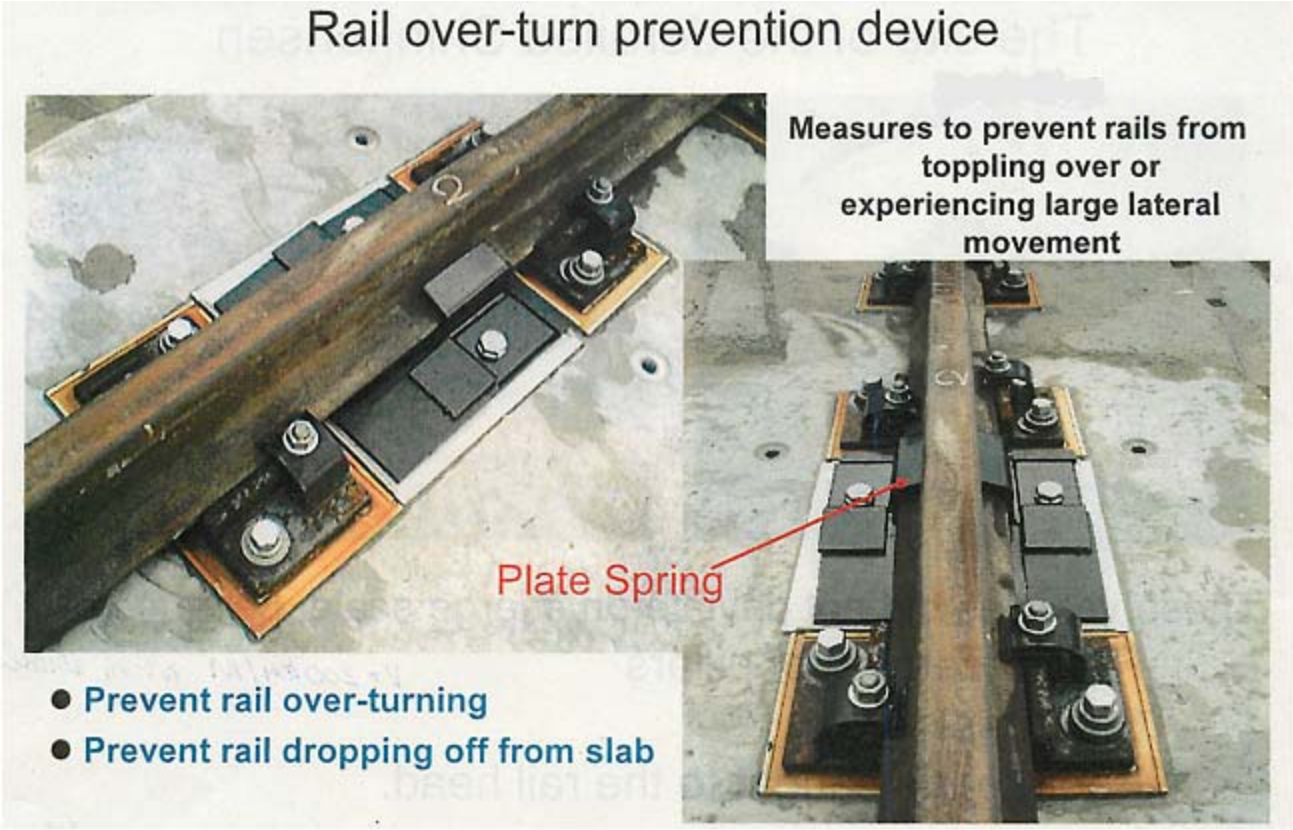

The CHSTS will consider requiring similar undercar protective devices and overturn prevention devices when selecting its rolling stock.

3.3.5.2 HST Containment on an Elevated Structure

Long bridges or aerial structures present potential for increased damage in the event of derailment due to increased height and/or length of the structure. Similarly, the risk of derailment can be greater on bridges where the design is considered more susceptible to the cause of train derailments (e.g., through truss or similar type through bridges).

In these cases, HST must be contained within its operational envelope. The undercar equipment and traction motors would drop inside the rails, as occurred in the earthquake-caused derailments in Japan and Taiwan, and prevent significant lateral movement of the trainsets. The cable troughs along the track further limit trainset lateral movement. Special purpose derailment curbs have not proven beneficial in any known derailment occurrence.

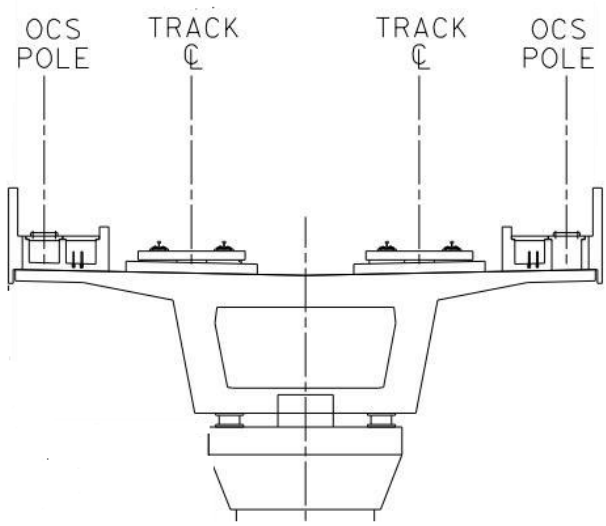

Figure 3.3-1: Cable Troughs / Containment Parapet on Elevated Structure

3.3.5.3 HST Containment in Tunnels

Provisions to contain HST derailments in or near tunnels will be considered due to increased consequences of a derailment within a tunnel and/or on approach of a tunnel portal. The level of risk is dependent on tunnel length which, in turn, affects the ease of emergency response. The severity of a derailment is also sensitive to tunnel configuration. For example, the consequences of derailment in cut-and-cover tunnels may be less onerous than bored tunnels. In the former case, the train is likely to remain upright and within its operating envelope due to the rectangular cross-section (e.g., vertical walls).

For twin- and single-bore, single-track or two-track tunnels, containment will be facilitated by the dropping of brake discs and traction motors inside the rails and also the maintenance and evacuation walkways which function similarly to a containment curb or parapet. The operation of high-speed trains in tunnels will be consistent with the System Safety Plan and the Fire and Life-Safety Design Basis documents that will be developed during subsequent design.

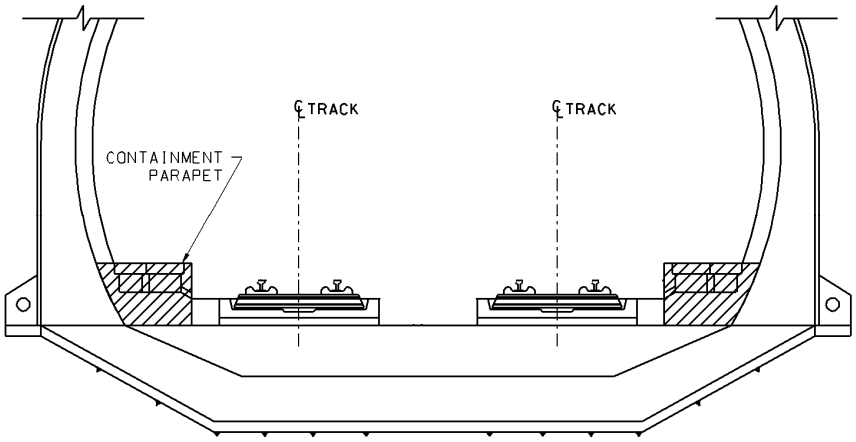

Figure 3.3-2: Containment Parapet within a Twin Track Tunnel

3.4 PROTECTION BETWEEN HST AND HIGHWAY VEHICLES

3.4.1 Background

The requirements for HST alignments located adjacent to, or crossing over/under the State Highway System (SHS) are based on published guidance in FRA publications, Caltrans manuals, and discussions between Caltrans Headquarters staff and the CHSTS Program Management Team.

3.4.2 FRA Guidance

The FRA Guidance Report, *DOT/FRA/ORD-95/04,Safety of High-Speed Guided Ground Transportation Systems Intrusion Barrier Design Study (*Parsons Brinckerhoff Quade & Douglas, Inc., November 1994), contains findings and recommendations of various barrier types to contain a derailed HST from the adjacent highway and various barrier types to prevent and redirect vehicular traffic when crashing into the barrier. To redirect an 80,000 pound van-type tractor-trailer takes a barrier approximately 4 feet - 2 inches to 4 feet – 6 inches in height. To redirect an 80,000 pound fluid tank truck will take a barrier 7.0 feet to 7.5 feet in height. These heights are required to prevent the truck from rolling over the barrier. Furthermore, Figure 3.41 below, which represents Figure 4-31 from the FRA Guidance Report, shows a 4 foot - 2 inch high concrete safety shape barrier with a metal rail on top, which successfully redirected an 80,000 pound van truck traveling at 50 mph and impacting the barrier at a 15 degree angle. Also, this figure shows a 7.5 foot high concrete barrier, which successfully redirected an 80,000 pound fluid tank truck at 50 mph and impacting the barrier at a 15 degree angle. This barrier design has been constructed on I-10 in San Antonio, Texas. A similar barrier has been installed on I-68 near Cumberland, Maryland. This barrier has been impacted several times by trucks and has effectively redirected them away from the adjacent hazard. Figure 3.4-3 illustrates the details of the concrete barriers discussed above.

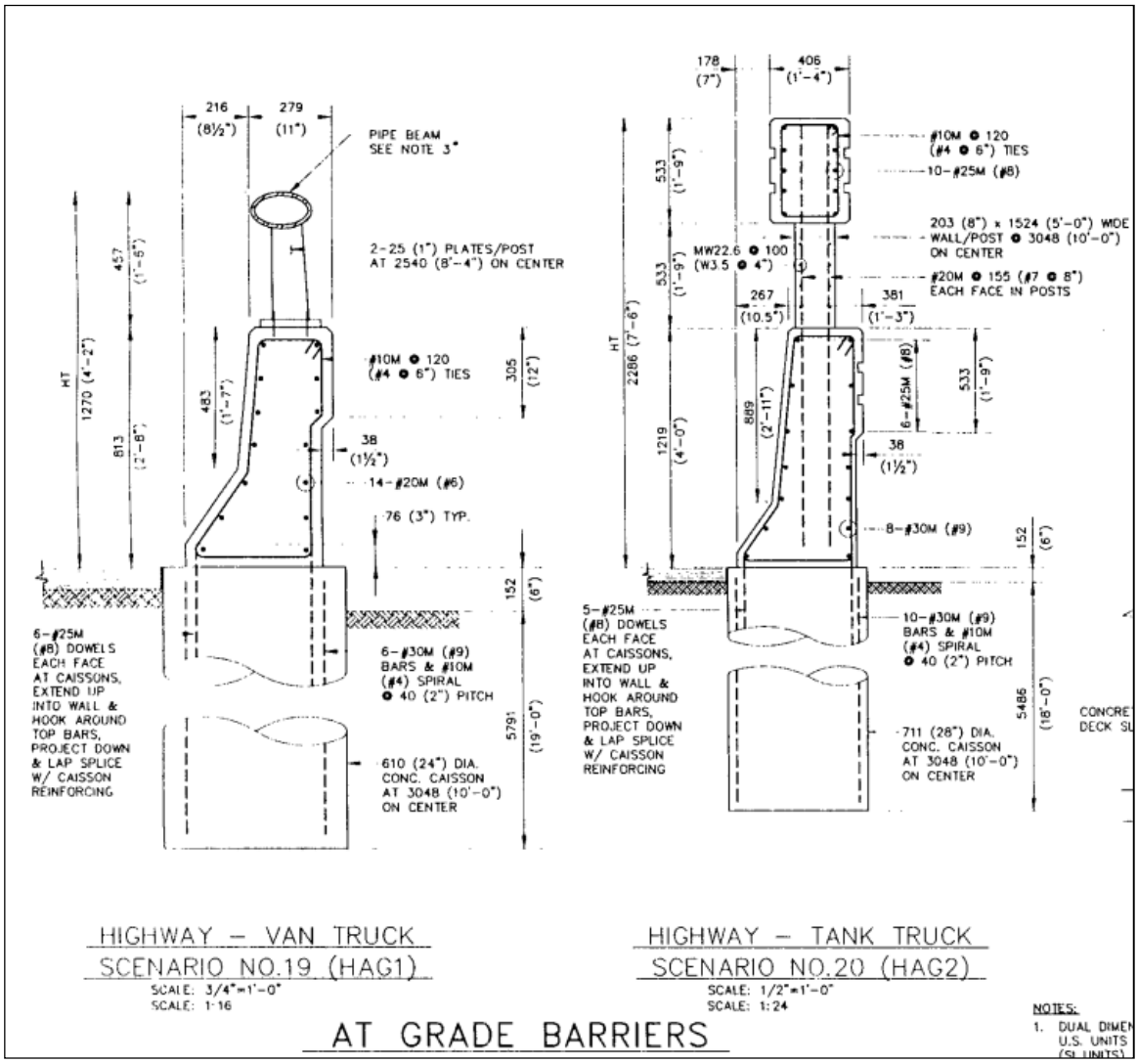

Figure 3.4-1 FRA Recommended Highway Barrier Details

Source: *FRA Guidance Report, Safety of High-Speed Guided Ground Transportation Systems Intrusion Barrier Design Study* (Parsons Brinckerhoff Quade & Douglas, Inc., November 1994, Figure 4-31)

In addition to the recommended barrier heights for vehicle intrusion protection, the lateral separation between a barrier and the rail line need to be considered. Impact forces from a derailed vehicle striking a wall have been found to be dependent on the distance and perpendicular to the track of the barrier, from the centerline of the vehicle guideway to face of the barrier. The forces resulting from barrier placement at different offset distances are smallest when the barriers are located at small and large distances from the track. The largest force occurs when the barrier is placed at intermediate distances. According to the FRA Guidance Report, the recommended minimum and maximum offset distance for an at-grade barrier to protect the HST from derailed highway vehicles is between 9 and 40 feet.

Current Practices

Germany. HST service between Cologne and Frankfurt is built adjacent to the Autobahn. A design drawing of the intrusion prevention device (Figure 3.4-2) and a picture of the HST next to the Autobahn (Figure 3.4-3) depict the intrusion protection installed between the HST and the Autobahn. As shown in Figure 3.4-2, the height of the intrusion prevention device adjacent to the roadway is 1.15 meters (approximately 3.8 feet) in height. A screen wall that is behind the intrusion prevention

device is 3 meters (approximately 10 feet) in height and separated by a distance of 1.0 meter (approximately 3.3 feet). In Figure 3.4-3, the 3-meter (10-foot) high screen wall separates the high-speed rail line and the Autobahn.

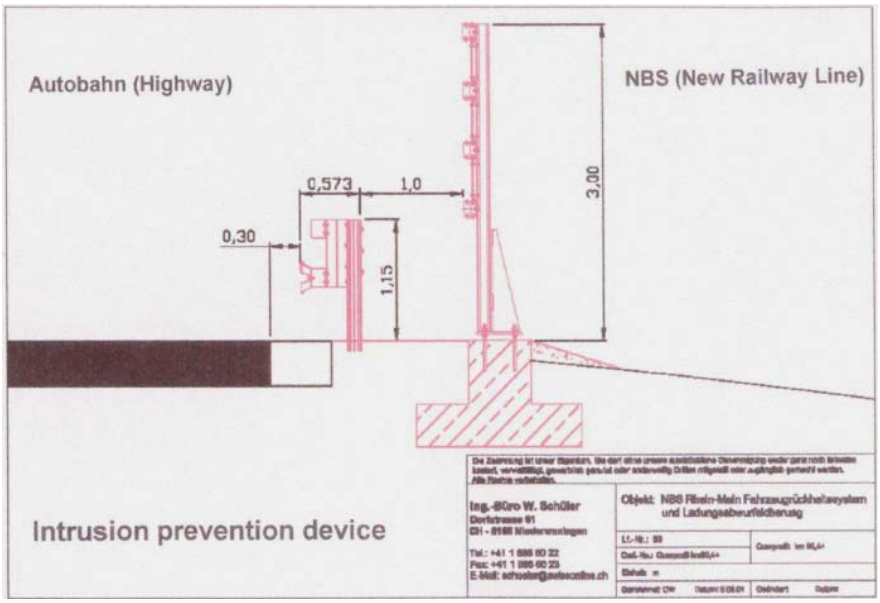

Figure 3.4-2 Autobahn Intrusion Prevention Device

Source: 2010 High-Speed Rail in the United States: An International Practicum on System Implementation, *Introduction to the Practicum on High-Speed Rail Systems Presentation*

Figure 3.4-3 High-Speed Rail and Road in Parallel along the Autobahn

Source: 2010 High-Speed Rail in the United States: An International Practicum on System Implementation, *Introduction to the Practicum on High-Speed Rail Systems Presentation*

United States. In discussion with the FRA pertaining to proposed intrusion protection of HST right-of-way in shared highway corridors, it was suggested to consider commuter railroads and transit agencies where similar conditions may already exist. The commuter operators that were suggested included Metro (Los Angeles, CA), BART (San Francisco, CA), and WMATA (Washington, DC).

Metro provides transit service through the various counties in southern California. Along the I-105 corridor, Metro's Green Line provides light rail service between the Marine/Redondo station in the South Bay region of Los Angeles and the Norwalk station in Norwalk. Based on aerial photographs (Figure 3.4-5), it appears that a standard Type 50 concrete barrier is used (2 feet – 8 inches high with a 2-foot wide base) with a chain link fence attached to the top of the concrete barrier. Freeway shoulders are provided along the I-105 corridor and vary in width.

Figure 3.4-4 Concrete Barrier along I-105 Corridor
Source: Google Maps

BART provides transit service throughout the Bay Area in northern California (San Francisco, Oakland, etc.). According to Resolution ST-77 by the Public Utilities Commission of the State of California, April 21, 2005, the minimum height of 3 feet for the concrete barrier can be raised in a few locations to prevent intrusions into BART right-of-way. The purpose of the barrier height deviation was in response to accidents along the I-580 corridor where vehicles hit the highway median strip. Between January 1995 and December 1996, there were 27 incidents where vehicles hit highway medians along BART's right-of-way. In one of these incidents, a vehicle broke a concrete barrier and nearly entered into BART's right-of-way.

The retrofitted concrete barrier was 6 feet in height and construction was completed in 1997 (Figure 3.4-5). Since the completion of the retrofitted barriers, there have been no incursions along sections of the I-580 corridor.

Figure 3.4-5 Concrete Barrier along I-580 Corridor
Source: Google Maps

The Washington Metropolitan Area Transit Authority (WMATA) provides transit service in the Washington, DC area and serves a population of approximately 3.4 million within a 1,500 square mile jurisdiction. Along the I-66 corridor, Washington Metro runs down the center median. Based on aerial photographs (Figure 3.4-6), it appears that a standard Type 50 concrete barrier is used (2 feet – 8 inches high with a 2-foot wide base) with a chain link fence approximately 10 to 15 feet from the concrete barrier. Freeway shoulders are provided along the I-66 corridor, and vary in width.

Figure 3.4-6 Concrete Barrier along I-66 Corridor
Source: Google Maps

Summary

Based on the research performed to date, and evaluation of recent examples of vehicle intrusion devices implemented in shared highway corridors with commuter/transit rail in the U.S. and HSR facilities in Germany, the following conclusions can be made:

1. In order to prevent larger vehicles (in excess of 80,000 pounds) from going over the barrier, the height of the barrier separating the vehicular and rail traffic should range between 4 feet-2 inches and 7-feet-6 inches as documented in the Safety of High-Speed Guided Ground Transportation Systems Intrusion Barrier Design Study published by the FRA.
2. The lateral separation between the edge of roadway and the barrier should range from a minimum of 9 feet to a maximum of 40 feet based on the Safety of High-Speed Guided Ground Transportation Systems Intrusion Barrier Design Study published by the FRA.
3. A barrier height of 3 feet–9 inches with a screen wall of 10 feet is currently being used to separate the HSR from the Autobahn traffic for the line between Cologne and Frankfurt.
4. Although safety performance of Caltrans standard Type 60 concrete barriers cannot be ascertained due to lack of testing or modeling that considers containment behavior of large profile vehicles, the standard concrete barrier Type 60G (4-foot-8 inches high) will satisfy height requirements recommended by the *Safety of High-Speed Guided Ground Transportation Systems Intrusion Barrier Design Study* published by the FRA.

3.4.4 Clearances and Roadside Protection

Roadside protection may be required where a HST corridor is in close proximity to a highway. Caltrans Highway Design Manual Topic 309.1 provides information on horizontal clearances to highway facilities. Clearances are measured from the edge of traveled way (ETW) to the closest point of a fixed object/obstruction. The Clear Recovery Zone (CRZ) is defined in HDM as a 30-foot unobstructed zone measured from ETW for a freeway/expressway and 20-foot for a conventional

highway. The CRZ is intended to provide errant highway motorist sufficient space to regain control of their vehicles in a safe manner. Any fixed object placed within the 30-foot CRZ requires consultation with Caltrans and preparation of a Design Exception by the designer and approval by Caltrans. As such, any HST fixed objects, such as OCS poles or HST piers or walls, shall be at least 30 feet away from the ultimate ETW or a Design Exception with proper mitigation measures shall be prepared by the Designer and submitted to Caltrans for approval.

Caltrans Traffic Manual, Chapter 7 provides guidance on roadside protection and various mitigation measures such as use of Metal Beam Guard Rails (MBGR), crash cushions, or concrete barriers depending on type of type of fixed objects, roadway characteristics, and accident history. Caltrans horizontal clearance requirements also address the CHSTS concern to protect HST operational right-of-way from intrusion by errant highway vehicles. For example, concrete barriers installed as roadside protection around HST piers within a Caltrans CRZ provide protection for HST aerial structure piers against errant highway vehicles. The type of protection for HST facilities will be specific to the location and shall take into account factors such as traffic volumes, speed, highway geometry, side slope, accident history, etc. For example, at locations where there is a high-risk of exposure for intrusion by errant vehicles, a more stringent protection measure maybe required to adequately protect HST operational right-of-way from errant cargo and tanker trucks. In a FHWA publication[1], a 7.5-foot high concrete barrier wall was recommended to contain tanker trucks with the roadway.

Although the current Caltrans minimum CRZ is 30 feet, Caltrans is requiring an additional 22 feet of clearance as discretionary Clear Recovery Zone in its November 2, 2012 update of HDM for high-speed rail corridors. Due to the advancement of the preliminary engineering and environmental studies for the CHSTS in the Central Valley, Caltrans may grant an exception to this new requirement for the segments of CHSTS with an approved environmental document prior to the November 2, 2012 date. .. Thereby, placement of any HST fixed object within 52 feet of the ultimate ETW requires preparation of a Mandatory Design Exception by the designers and their approval by Caltrans. The Design Exceptions should address why the fixed object(s) cannot be placed beyond the 30 feet and what kind of mitigation is recommended to protect motorists from hitting the fixed object(s). Therefore, for high-speed rail corridors outside the Merced to Fresno segment of CHSTS in Central Valley, Caltrans requires a minimum of 52 feet of horizontal clear distance between closest high-speed rail fixed object and the ultimate ETW of a freeway, expressway or conventional highway with posted speed of greater than 40 miles per hour. The recommendation shall be in accordance with Caltrans design guidelines and shall consider factors such as geometric conditions, collision history, traffic volumes and speeds in selection of the specific type(s) of roadside protection that may be needed. Each location will be evaluated on its own to determine the appropriate solution.

3.4.4.1 Highway Fixed Objects Adjacent to HST Tracks

Caltrans HDM Topic 309.5 provides information on horizontal clearances for Caltrans facilities crossing over railroad tracks. Clearances are measured from center of the nearest track to closest point of obstruction, which is typically an abutment or column. The minimum clearances are defined by the California Public Utilities Commission (CPUC), which Caltrans adopts, and is consistent with the American Railway Engineering and Maintenance-of-Way Association (AREMA) standards. The minimum clearance is dependent upon the track geometry at the point of obstruction (tangent track, normal curved track or curved track) in confined areas. Table 309.5B of the HDM defines these clearances.

The CHSTS requires the centerline of the HST track be located 25 feet or greater from the face of a permanent structure of a roadway overcrossing. For clear distances of 25 feet or greater, it is not anticipated that crash wall or pier protection is required. However, the minimum required horizontal clearance from the centerline of HST track is 15 feet to the face of a permanent structure. Crash walls/pier protection may be required for clear distances less than 25 feet and candidate locations will be assessed through site-specific risk assessment. Requirements for crash walls and pier protection are discussed in the Caltrans Traffic Manual Chapter 7 - Roadside Protection.

[1] *Federal Highway Administration Publication Public Record Vol. 63 No. 5, "Basics of Concrete Barriers, March/April 2000*

3.4.5 Vertical Clearance Requirements

3.4.5.1 HST Over Highways/Roadways

Per Caltrans HDM Topic 309.2, a minimum vertical clearance of 16.5 feet is required over freeways and expressways. For local roadways, a minimum vertical clearance of 15 feet may be acceptable and should be discussed with the local agency for concurrence. A minimum 20.25 feet clearance is required where HST alignments cross over the established Extra Legal Load Network (ELLN) of roadways. Information on the ELLN roadways can be found at:

http://www.dot.ca.gov/hq/traffops/permits/elln.htm

4.0 SUMMARY AND RECOMMENDATIONS

The track separation requirements and intrusion protection measures presented in this memorandum are recommended for implementation in order to maximize the level of safety for the HST system and to ensure the safety of adjacent transportation facilities. Three intrusion scenarios have been identified for alignments along the HST right-of-way. These are summarized in the following section along with protection measures.

4.1 INTRUSION OF CONVENTIONAL RAILROAD CARS INTO HSR OPERATIONAL CORRIDOR

With respect to conventional freight and passenger railroads, design criteria should minimize or eliminate the risk of intrusion of a derailed conventional train into the HSR operational corridor. This will be accomplished with physical separation between facilities or a physical barrier where separation is not practical. Physical barriers may include earth berms or swales and reinforced concrete or steel barriers designed to withstand forces from a derailed trainset. Other mitigation measures could include the use of check rails at particularly high-risk locations, such as bridge piers or switches and interlockings on elevated structures.

Figure 4.1-1 Single Check Rail within Freight Tracks

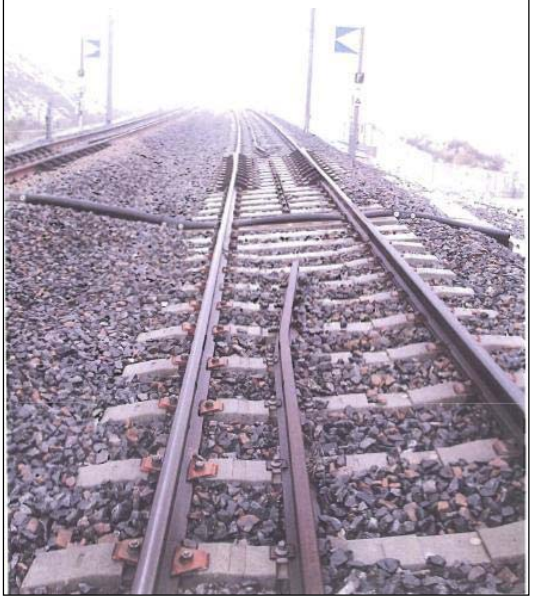

Protection Measures:

1. Locate HST infrastructure at sufficient separation distances horizontally and/or vertically to avoid intrusion.
2. Design supporting piers to mitigate impact loads and provide barriers to protect the piers.
3. Place check rails on lines in high-risk areas, especially before and after bridge structures, in order to maintain derailed freight cars within their operating envelope.
4. Install earth ditches and berms or other physical barriers between the closest tracks of the adjacent rail infrastructure.

Note that the intent of these measures is to maintain the train within its right-of-way and not to stop the train. Supplemental protection is achieved through the use of intrusion detection technology in the fencing around HST operations as recommended by FRA.

4.2 INTRUSION OF HIGH-SPEED TRAINS INTO OTHER OPERATIONAL TRANSPORTATION CORRIDORS

The objective of the design guidance is to contain a HST trainset within its operational corridor in order to reduce the potential for intrusion of the high-speed train into an adjacent transportation corridor. Strategies to ensure containment include operational and maintenance plan elements, which will ensure high-quality tracks and vehicle maintenance to reduce the risk of derailment. This approach is similar to HST systems around the world. In addition, physical elements, such as containment parapets, will be considered for specific areas with a high risk of high impact of derailment including, aerial structures, tunnels, and approaches to conventional rail and roadway crossings.

Protection Measures for At-Grade Tracks:

1. Design the HST infrastructure alignment at sufficient distances from other systems to avoid intrusion.
2. Use modern HST rolling stock, which have documented performance to mitigate the risk of the train derailment and extending beyond it operating envelope.
3. Ensure the highest appropriate level of maintenance of both infrastructure and rolling stock which will minimize the risk of derailment.
4. Install earth ditches and berms between systems where sufficient separation cannot be maintained.

Protection Measures for an Elevated Structure/Aerial Structure:

Use of cable troughs as containment parapets with appropriate structural integrity.

Protection Measures within a Tunnel:

1. Use of compliant safety walkway walls as containment parapet.
2. Provide derailment containment on the side that does not have walkways.

4.3 INTRUSION OF HIGHWAY VEHICLES INTO HST OPERATIONAL CORRIDOR

The basis of design guidance looks to minimize the potential for highway vehicles to intrude into the HST corridor.

Based on the research performed to date, and evaluation of recent examples of vehicle intrusion devices implemented in shared highway corridors with commuter/transit rail in the U.S. and HSR facilities in Germany, the following conclusions can be made:

1. In order to prevent larger vehicles (in excess of 80,000 pounds) from going over the barrier, the height of the barrier separating the vehicular and rail traffic should range between 4 feet–2 inches and 6 feet as documented in the *Safety of High-Speed Guided Ground Transportation Systems Intrusion Barrier Design Study* published by FRA.
2. The lateral separation between the edge of the 'ultimate' roadway and HST operating right-of-way shall be a minimum of 30 feet. Caltrans has increased this minimum requirement to 52 feet in its November 2, 2012 Highway Design Manual update. Due to timing of this update, the 52 feet requirement is applicable to high-speed rail corridors outside the Merced to Fresno section of CHSTS in Central Valley.
3. Where right-of-way is constrained and a 30-foot separation cannot be obtained, a concrete barrier, varying in height from 4 feet-8 inches to 7.5 feet, shall be used to avoid intrusion of highway vehicles into HST right-of-way. The higher wall height is required where there is a greater risk of intrusion by cargo and tanker trucks. A modified Caltrans Type 60G barrier, with a vertical side facing the HST right-of-way, can be used along the right-of-way for the lower barrier height and a modified Type GC can be used for the higher barrier wall height.
4. To protect the HST aerial structure piers, Caltrans Type 60GE barriers can be used when the separation between the edge of traveled way and face of HST pier is less than 30 feet.

Recommended design guidelines for intrusion protection are included in Section 6.

5.0 SOURCE INFORMATION AND REFERENCES

1. High-Speed Passenger Rail Safety Strategy (HSPRSS) published by FRA (November of 2009)
2. Federal Railroad Administration Code of Federal Regulations (CFR)
   - 49CFR Part 213 Section 316 for protection of the right-of-way for Class 8 and 9 tracks
   - 49CFR Part 214, Railroad Workplace Safety
3. DOT/FRA/ORD-95/04: Safety of High-Speed Ground Guided Transportation Systems, Intrusion Barrier Design Study (November 1994). Parsons Brinckerhoff Quade & Douglas, Inc. Boston, MA
4. Manual for Railway Engineering of the American Railway Engineering and Maintenance-of-Way Association (AREMA Manual)
5. California Department of Transportation, Highway Design Manual (May 2006 with November 2, 2012 Updates) , Traffic Manual, Chapter 7, Traffic Safety Systems, January 2012, and Standard Plans (2010 Edition)
6. AREMA Conference 2004, Corridor Design Issues For Florida High-Speed Rail, W. Robert Moore, HNTB Corporation, Chicago, IL
7. Practices and mitigation measures used on HSR systems in Europe and Asia for intrusion protection from adjacent transportation systems
8. DesertExpress Highway Interface Manual, February 8, 2011
9. Technical Guidebook GEFRA 2004: Technical guidance from National French Railways about twinning between high-speed train and road or highway infrastructures
10. SNCF Technical Standard For High Speed Train Line Construction (2007 Edition)
11. CTRL Technical Manual
12. CHSTS Technical Memorandum 6.1 - Selected Train Technologies

6.0 DESIGN MANUAL CRITERIA

6.1 INTRUSION PROTECTION

The following information applies to both shared and high-speed train corridors.

6.1.1 Protection of HST Operating Infrastructure from Intrusion

The main principle of these design criteria is to protect the HST Operational Envelope and Operational Infrastructure in order to preserve safe and reliable HST operations. The area considered as the Operating Envelope is shown in Figure 6.1-1. Operational Infrastructure includes infrastructure within the operating envelope and HST facilities such as traction power facilities, wayside power cubicles, train control cabinets, communication cabinets, cable troughs, piers and walls supporting HST structures:

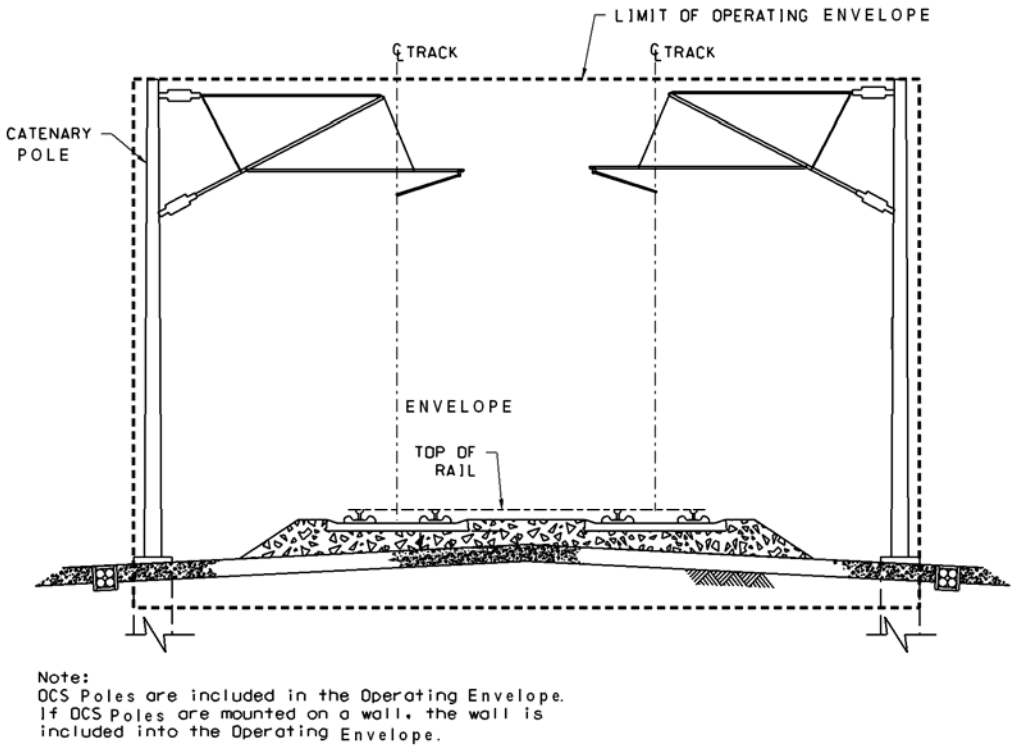

Figure 6.1-1: Limit of Operating Envelope

6.1.2 Containment of Conventional Trains

Conventional trains sharing corridors with the HST will be prevented from intruding into the HST Operational Infrastructure by lateral separation or by a physical barrier where lateral separation is not practical. Physical barriers may include earth berms or swales, and reinforced concrete crash walls designed to withstand the anticipated forces from a derailed conventional freight or passenger rail train set. Other mitigation measures such as the use of check rails at particularly high-risk locations, like bridge piers, shall be considered when HST is in shared corridors with other conventional trains.

<u>Protection Measures:</u>

- Locate HST infrastructure at sufficient separation distances to avoid intrusion
- Design supporting piers to mitigate impact loads and provide crash walls to protect the piers
- Place check rails on high-risk lines, especially before and after bridge structures, in order to maintain derailed freight cars within their operating envelope

- Install earth ditches and berms or other physical barriers between the closest tracks of the adjacent rail infrastructures

Supplemental protection is achieved through the use of intrusion detection technology in the fencing, such as trip wires, around HST operations. Intrusion protection, where required, shall be designed in conjunction with the hazard analysis and risk assessment to determine the necessity of the physical barrier.

6.1.3 Containment of HST Trains

High-speed trainsets shall be contained within the operational corridor in order to reduce the potential for intrusion into an adjacent transportation corridor. Strategies to ensure containment include:

- Design the HST infrastructure alignment at sufficient distances from other systems to avoid intrusion.
- Use modern HST rolling stock, which have documented performance to likely minimize the risk of the train derailment and extending beyond it operating envelope. These protections can include use of undercar L-shaped car guards and use of Plate Springs to prevent rails from large lateral movement.
- Physical elements, such as containment parapets, shall be considered for specific areas with a high risk of high impact of derailment including aerial structures, tunnels, and approaches to conventional rail and roadway crossings.
- Ensure the highest appropriate level of maintenance of both infrastructure and rolling stock which will minimize the risk of derailment.
- On elevated structures, it is even more imperative that HST remains within its operational envelope. Protection can be provided by containment parapets with appropriate structural integrity.
- Tunnels: For twin bore, single-track tunnels, containment will be provided by the maintenance and evacuation walkways, which function like a containment parapet.

6.1.4 Separation Distance between HST and Adjacent Railroads

A range of separation distances with the associated protection follows. Distances are measured between the centerlines of the closest conventional rail and high-speed tracks.

1. No intrusion protection is required for tracks with centerlines separated horizontally by 102 feet or greater.
2. No intrusion protection is required where the closest HST track elevation is 10 feet or higher than the rail elevation of the closest conventional track. This can be accomplished when the HST is on aerial structure, on an embankment or on a retained fill. However, protective structures may be required for piers, abutments or retaining walls if the side clearance is less than 25 feet.
3. Where intrusion protection is required, the minimum total height shall be 10 feet and may be comprised of a ditch and berm, concrete wall plus screen, or only concrete wall.
4. Use of only berms or ditches as intrusion protection requires centerline separation of 76 feet or more where half of the berm is in the HST right-of-way and the other half in adjacent railroad right-of-way, as shown on drawing TM 2.1.7-A, and 85 feet or greater where the entire berm is in HST right-of-way or 76 feet or more where the entire ditch is within HST right-of-way, as shown on drawing TM 2.1.7- E in Appendix A.
5. A physical intrusion barrier/crash wall is required when the separation between centerlines of the nearest HST and adjacent conventional railroad track is less than 76 feet, as shown on drawing TM 2.1.7-D in Appendix A. The minimum separation between the closest conventional railroad track centerline and HST track centerline is 50 feet (37 feet with railroad approval) for at grade section and 27.5 feet on a common aerial structure as shown on drawing TM 2.1.7-B.

These guidelines consider physical separation and do not include right-of-way considerations, which may introduce additional separation requirements. Additionally, separation requirements of other owners and operators must be considered in establishing separation requirements.

6.1.5 Pier Protection for Grade Separated Projects

The minimum offset between pier and the closest track shall be 25 feet per AREMA recommendations. If this distance is not feasible, a crash wall to protect the piers shall be installed. Refer to Typical Cross Sections in Appendix A for pier protection crash walls.

6.1.6 Containment of Highway Vehicles

Based on the current Caltrans Highway Design Manual (HDM), Topic 309.1, any HST fixed objects, such as OCS poles or HST piers or walls, shall be at least 30 feet away from the ultimate ETW of a freeway or expressway, or 20 feet away from the ultimate ETW of a highway. The 30-foot offset requirement has been increased by an additional 22 feet (to provide a 52-foot-wide CRZ) in the November 2, 2012 update of Caltrans HDM for high-speed corridors constructed longitudinally along a freeway, expressway, or conventional highway with a posted speed of greater than 40 miles per hour. If this clearance requirement cannot be met, the Designer shall apply for a Design Exception from Caltrans and provide proper roadside protection as mitigation measure. The roadside protections, as described in Caltrans Traffic Manual, Chapter 7 are Metal Beam Guardrail (MBGR), crash cushions or concrete barriers.

<u>Roadside Protection and Intrusion Protection Measures against Highway Vehicles:</u>

1. Locate HST infrastructure outside Caltrans CRZ. If such clearances cannot be met, provide a Metal Beam Guardrail (MBGR) or concrete barrier, as defined in Caltrans Traffic Manual, Chapter 7 to protect the highway errant vehicles from collision with HST fixed objects inside the CRZ.
2. At locations where the roadway geometry, the relative position of roadway to HST facilities, and probability of intrusion by cargo or tanker trucks dictate a more stringent protection of HST facilities, a 7.5-foot high concrete barrier wall at HST right-of-way or at HST pier locations is recommended. In areas with the same high risk of intrusion but with little or no cargo/tanker truck traffic, a minimum 4 foot-8 inch high barrier rail shall be used. The height of the barrier will depend on the probability of intrusion by larger trucks rolling over the barrier and into HST right-of-way. A modified Caltrans Type 60G barrier, with a vertical side facing the HST right-of-way, can be used along the right-of-way for the lower barrier height and modified Type GC can be used for the higher barrier wall.
3. Where HST piers are within the Caltrans CRZ, design supporting HST piers or walls to mitigate impact loads and install Caltrans Type 60 GE concrete barriers in front of the piers/walls to deflect potential errant vehicles from hitting the piers or walls.
4. At locations where roadway crosses over the HST right-of-way, the roadway aerial structure shall have a concrete bridge railing that can redirect or withstand the impact from an 80,000 pound vehicle so that the vehicle does not intrude into the HST right-of way. The concrete railing shall extend beyond the bridge limits to protect HST right-of-way from errant vehicles that may go over the embankment and intrude into HST right-of-way. Bridge railing shall have an 8-foot high screen wall and a curved fence along the HST operating right-of-way. There shall be also a solid plate behind the vertical portion of the fence that extends 25 feet beyond the centerline of the HST centerlines as shown on drawing TM 2.1.7-I in Appendix A.

Refer to Typical Cross Sections in Appendix A for intrusion protection measures.

Supplemental protection is achieved through the use of intrusion detection technology in the fencing around HST operations. When the intrusion detection system is activated, HST operation is stopped by the signaling system. Intrusion protection, if required, is designed in conjunction with the hazard analysis and risk assessment to determine the necessity of the physical barrier.

APPENDIX A

A.1 INTRUSION PROTECTION SCHEMATIC DRAWINGS

NOTES:

1. TRACK, SYSTEMS AND DRAINAGE ARE SCHEMATIC AND DO NOT REPRESENT DESIGN.
2. AR FENCE AND ITS FOUNDATION SHALL BE INSTALLED INSIDE AUTHORITY RIGHT-OF-WAY.
3. SIDE SLOPES (S:1) DETERMINED THROUGH SLOPE STABILITY ANALYSIS. FOR COMMON EMBANKMENT FILL ONLY, USE 2:1 SIDE SLOPES.

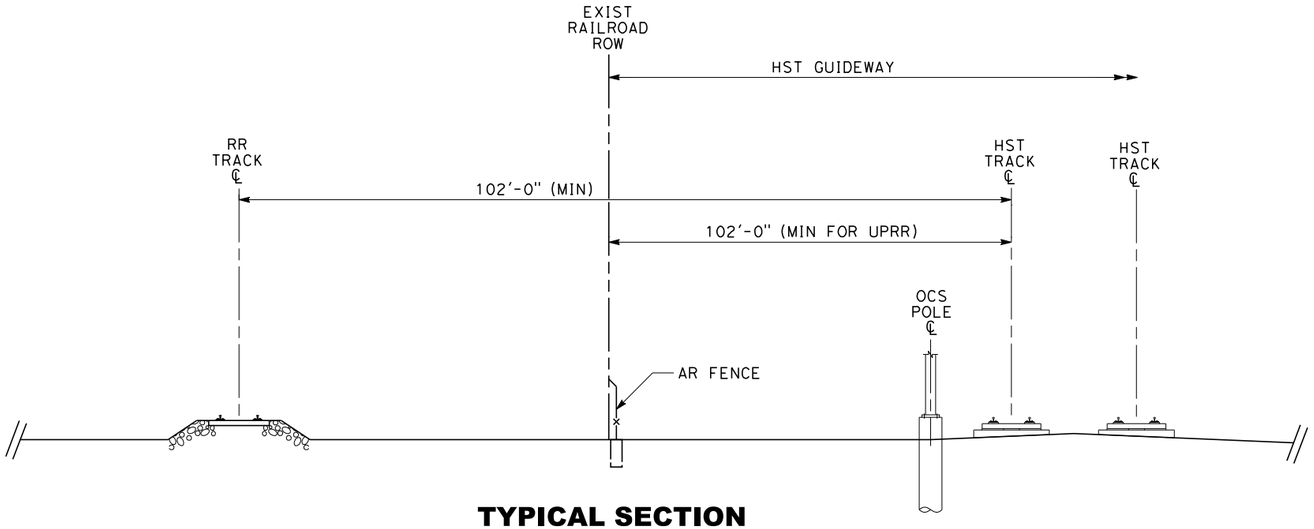

TYPICAL SECTION
102' LATERAL SEPARATION
NO INTRUSION PROTECTION REQUIRED

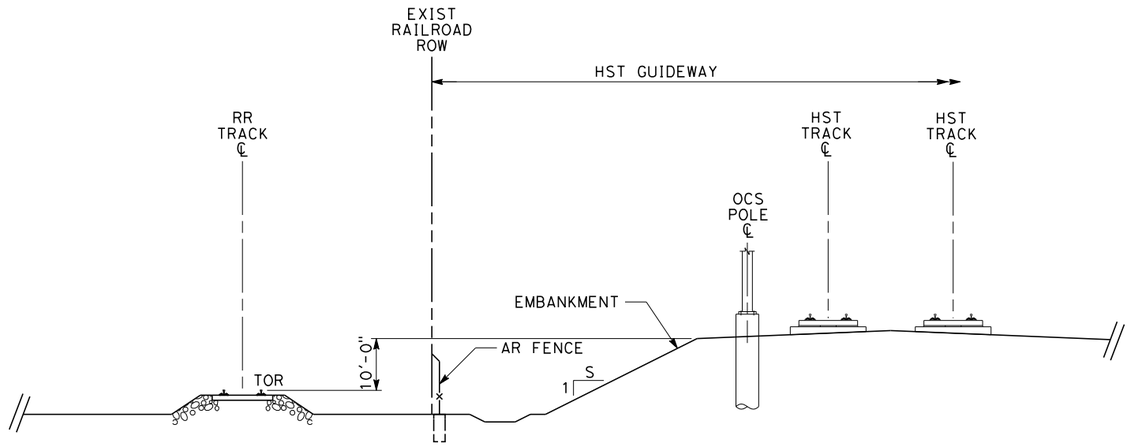

TYPICAL SECTION
10' HIGH HST EMBANKMENT
NO INTRUSION PROTECTION REQUIRED

REV	DATE	BY	CHK	APP	DESCRIPTION

DESIGNED BY A. ABTAHI
DRAWN BY H. NGUYEN
CHECKED BY S. MILITELLO
IN CHARGE G. LUSHEROVICH
DATE 06/12/2013

PARSONS BRINCKERHOFF

CALIFORNIA HIGH-SPEED RAIL AUTHORITY

CALIFORNIA HIGH-SPEED TRAIN PROJECT
TECHNICAL MEMORANDUM

INTRUSION PROTECTION
AT-GRADE WITHOUT INTRUSION PROTECTION
RAILROAD ADJACENT TO HST

CONTRACT NO.
DRAWING NO. TM 2.1.7-A
SCALE NO SCALE
SHEET NO.

Huante 6/13/2013 2:53:24 PM CAHSRP.tbl CHSR_PDF_half_black.plt c:\projectwise\pb\projectwiseint\huante\dms10616\2.1.7-A.dgn

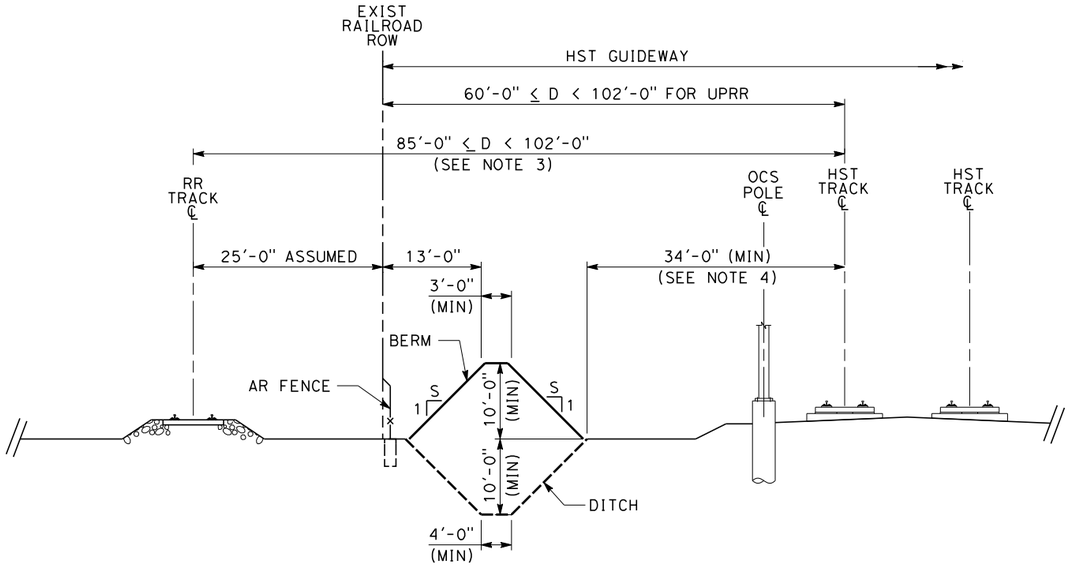

TYPICAL SECTION
EARTHEN BERM OR DITCH

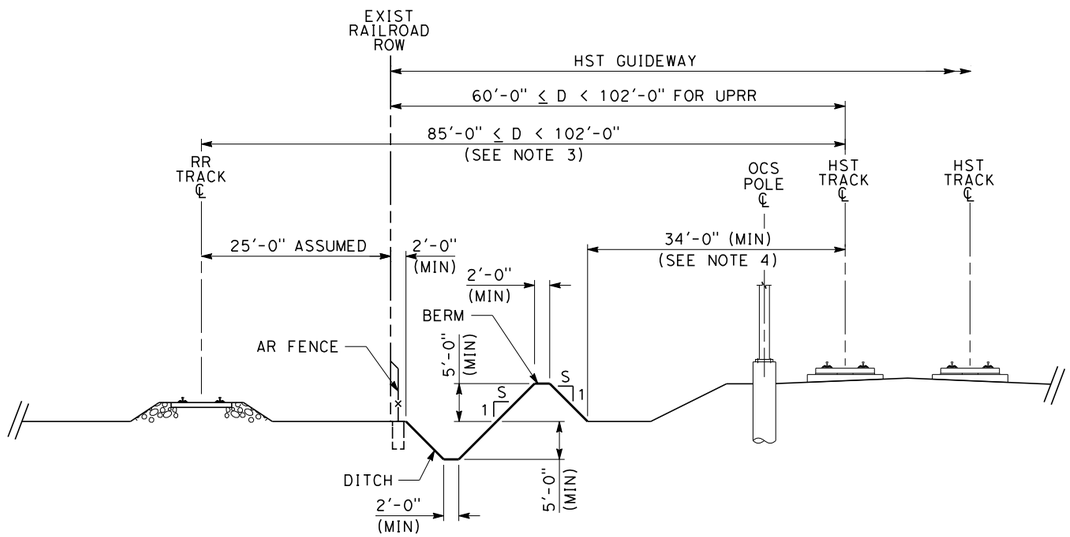

TYPICAL SECTION
EARTHEN BERM AND DITCH

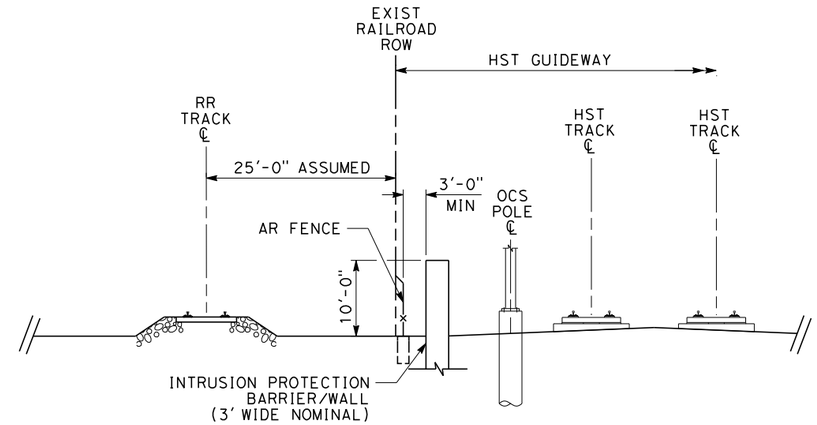

TYPICAL SECTION
CONCRETE BARRIER

NOTES:

1. TRACK, SYSTEMS AND DRAINAGE ARE SCHEMATIC AND DO NOT REPRESENT DESIGN.
2. SIDE SLOPES (S:1) DETERMINED THROUGH SLOPE STABILITY ANALYSIS. FOR COMMON EMBANKMENT FILL ONLY, USE 2:1 SIDE SLOPES.
3. 85'-0" MIN DISTANCE BETWEEN THE CLOSEST TRACK CENTERLINE IS BASED ON S=1.
4. MINIMUM DISTANCE CONSIDERS A MINIMUM OF 3'-0" HIGH EMBANKMENT AND A CONCRETE LINED DRAINAGE DITCH BETWEEN THE BERM AND TRACK BED TOE OF SLOPE.
5. BERM MATERIAL AND COMPACTION SHALL BE SIMILAR TO EMBANKMENT.

REV	DATE	BY	CHK	APP	DESCRIPTION

DESIGNED BY A. ABTAHI
DRAWN BY H. NGUYEN
CHECKED BY S. MILITELLO
IN CHARGE G. LUSHEROVICH
DATE 06/12/2013

PARSONS BRINCKERHOFF

CALIFORNIA HIGH-SPEED RAIL AUTHORITY

CALIFORNIA HIGH-SPEED TRAIN PROJECT
TECHNICAL MEMORANDUM

INTRUSION PROTECTION
RAILROAD ADJACENT TO HST AT-GRADE

CONTRACT NO.
DRAWING NO. TM 2.1.7-B
SCALE NO SCALE
SHEET NO.

Huante 6/13/2013 3:14:24 PM CAHSRP.tbl CHSR_PDF_half_black.plt c:\projectwise\pb\projectwiseint\huante\dms10616\2.1.7-B.dgn

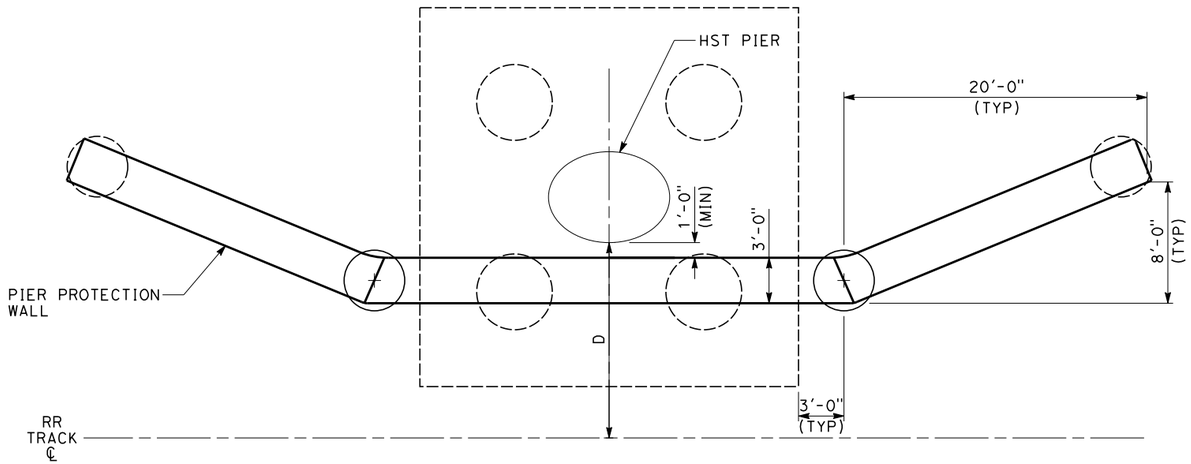

PLAN

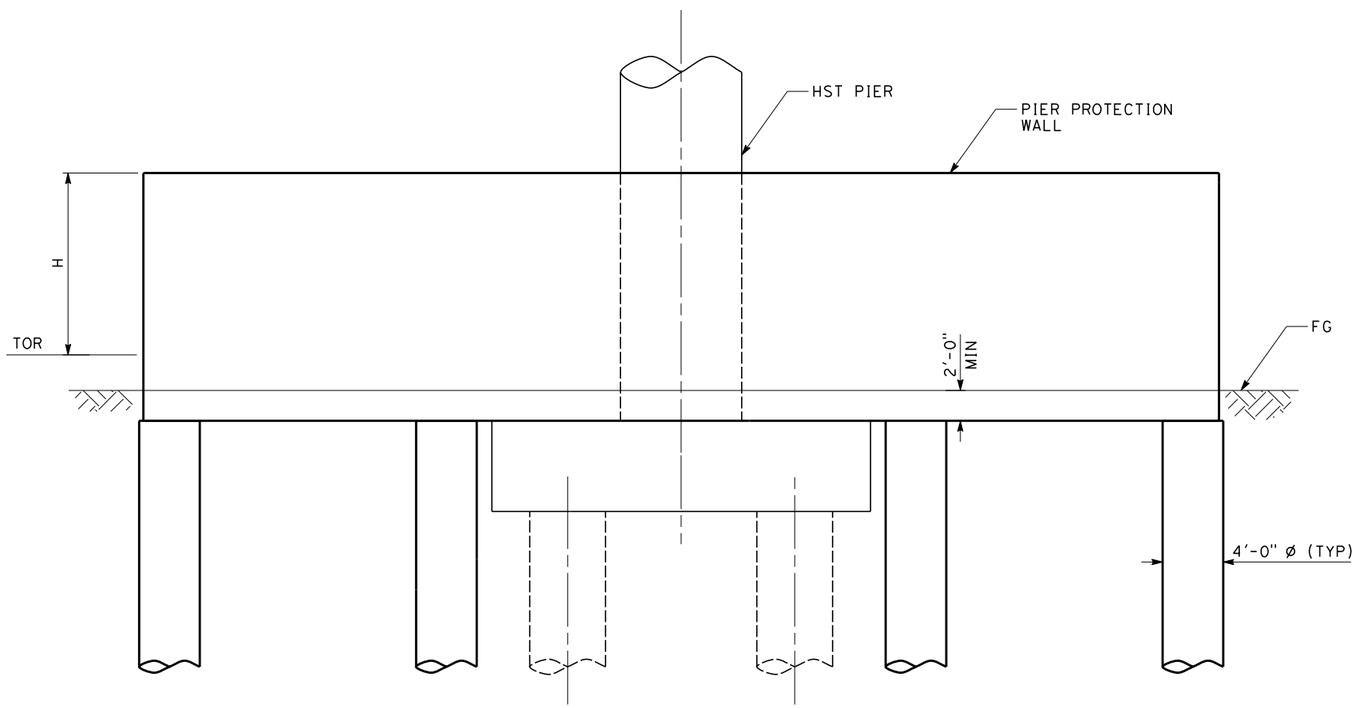

ELEVATION

NOTES:

1. TRACK, SYSTEMS AND DRAINAGE ARE SCHEMATIC AND DO NOT REPRESENT DESIGN.
2. PIER PROTECTION WALL IS REQUIRED IF CLEARANCE FROM FACE OF HST STRUCTURE TO NEAREST RAILROAD TRACK CENTERLINE IS LESS THAN 25'-0".
3. LOCATION WHERE PIER PROTECTION WALL IS REQUIRED SHALL BE DETERMINED THROUGH SITE SPECIFIC HAZARD ANALYSES.

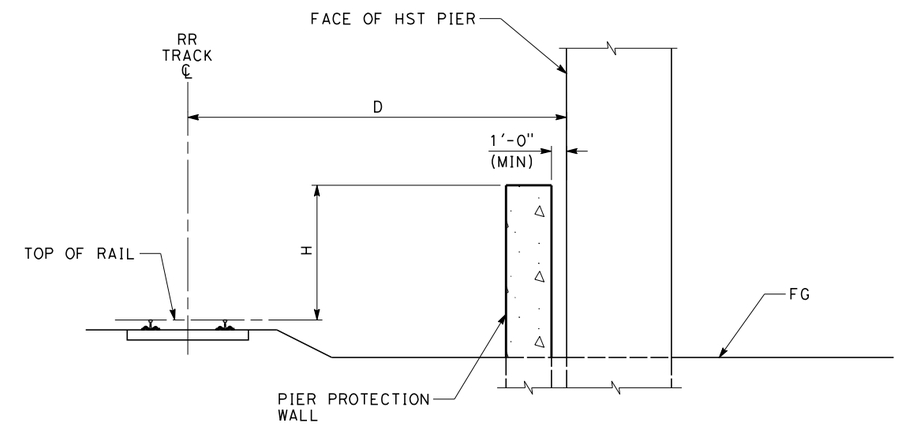

HST STRUCTURE PIER - PROTECTION WALL

CLEARANCE (D)	WALL HEIGHT ABOVE TOP OF RAIL (H)
≥ 25 FT	N/A
12 FT - 25 FT	6 FT
≤ 12 FT	12 FT

REV	DATE	BY	CHK	APP	DESCRIPTION

DESIGNED BY A. ABTAHI
DRAWN BY H. NGUYEN
CHECKED BY S. MILITELLO
IN CHARGE G. LUSHEROVICH
DATE 06/12/2013

PARSONS BRINCKERHOFF

CALIFORNIA HIGH-SPEED RAIL AUTHORITY

CALIFORNIA HIGH-SPEED TRAIN PROJECT
TECHNICAL MEMORANDUM

INTRUSION PROTECTION
HST PIER PROTECTION
IN RAILROAD RIGHT OF WAY

CONTRACT NO.
DRAWING NO. TM 2.1.7-C
SCALE NO SCALE
SHEET NO.

Huante 6/13/2013 3:16:17 PM CAHSRP.tbl CHSR_PDF_half_black.plt c:\projectwise\pb\projectwiseint\huante\dms10616\2.1.7-C.dgn

NOTES:

1. TRACK, SYSTEMS AND DRAINAGE ARE SCHEMATIC AND DO NOT REPRESENT DESIGN.
2. OFFSET TO TRACK AND LOCATION OF INTRUSION PROTECTION BARRIER WITHIN CONVENTIONAL RAILROAD RIGHT-OF-WAY REQUIRES APPROVAL FROM THE RAILROAD.
3. MINIMUM DIMENSIONS REQUIRE RAILROAD APPROVAL.

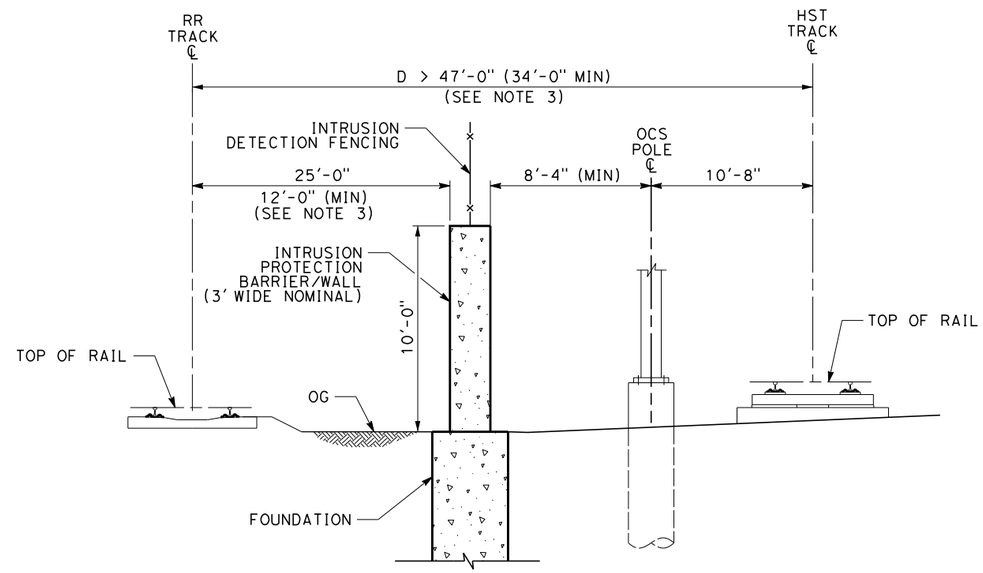

AT-GRADE SHARED CORRIDOR

REV	DATE	BY	CHK	APP	DESCRIPTION

DESIGNED BY A. ABTAHI
DRAWN BY H. NGUYEN
CHECKED BY S. MILITELLO
IN CHARGE G. LUSHEROVICH
DATE 06/12/2013

PARSONS BRINCKERHOFF

CALIFORNIA HIGH-SPEED RAIL AUTHORITY

CALIFORNIA HIGH-SPEED TRAIN PROJECT
TECHNICAL MEMORANDUM

INTRUSION PROTECTION BARRIERS IN SHARED CORRIDOR

CONTRACT NO.
DRAWING NO. TM 2.1.7-D
SCALE NO SCALE
SHEET NO.

Huante 6/13/2013 3:30:20 PM CAHSRP.tbl CHSR_PDF_half_black.plt c:\projectwise\pb\projectwiseint\huante\dms10616\2.1.7-D.dgn

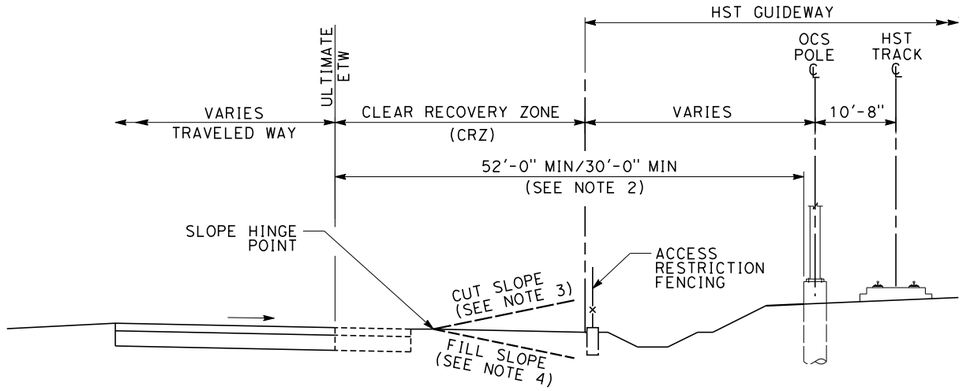

HST AT GRADE ADJACENT TO HIGHWAY/ROADWAY

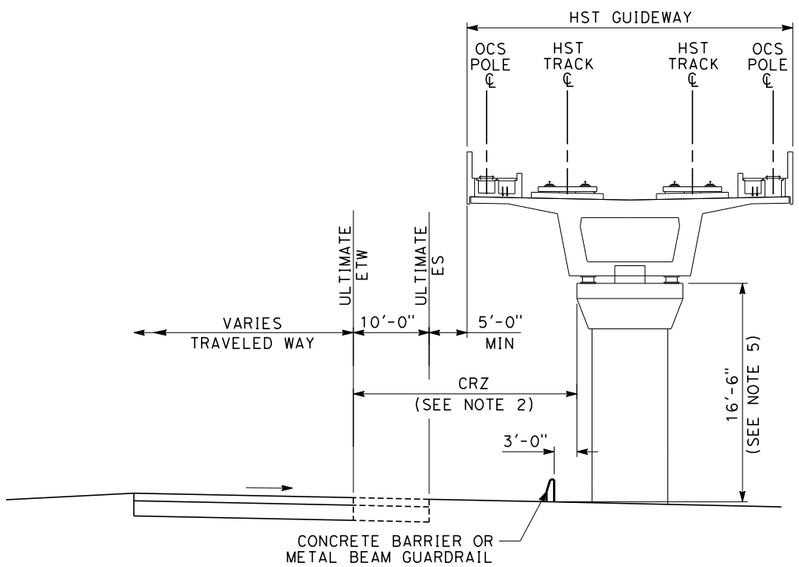

HST AERIAL STRUCTURE ADJACENT TO HIGHWAY/ROADWAY

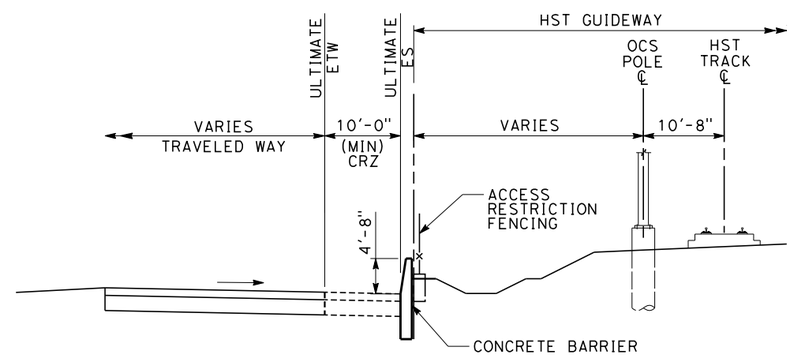

HST AT GRADE ADJACENT TO HIGHWAY/ROADWAY

WITH 10 FEET CLEAR RECOVERY ZONE (CRZ)

NOTES:

1. TRACK, SYSTEMS AND DRAINAGE ARE SCHEMATIC AND DO NOT REPRESENT DESIGN.
2. WHEN HST CORRIDOR IS CONSTRUCTED LONGITUDINALLY TO A FREEWAY, EXPRESSWAY, OR HIGHWAY, METAL BEAM GUARDRAIL OR CONCRETE BARRIER SHALL BE REQUIRED AT HST FIXED OBJECT IF THE DISTANCE FROM ULTIMATE ETW TO HST AERIAL STRUCTURE COLUMN, OR ANY HST FIXED OBJECT, IS LESS THAN 52'-0". IF HST CORRIDOR IS NOT LONGITUDINAL TO A FREEWAY, EXPRESSWAY, OR HIGHWAY, THE CLEARANCE REQUIREMENT TO A HST FIXED OBJECT IS 30'-0". REFER TO CALTRANS HDM CHAPTER 3 AND CALTRANS TRAFFIC MANUAL CHAPTER 7.
3. IF HEIGHT DIFFERENTIAL AT ROADWAY CUT SLOPE HINGE POINT AND HST ROW FENCE IS GREATER THAN 7'-0", NO GUARDRAIL OR CONCRETE BARRIER IS REQUIRED. A 7'-0" HEIGHT DIFFERENTIAL IN A 2:1 CUT SLOPE PROVIDES A GREATER EFFECTIVE SIDE SLOPE THAN A 7'-6" VERTICAL BARRIER RECOMMENDED BY FHWA.
4. IF THE HEIGHT DIFFERENTIAL AT ROADWAY FILL HINGE POINT AND HSR ROW FENCE IS GREATER THAN 10'-0", GUARDRAIL WILL BE REQUIRED AT ROADWAY FILL HINGE POINT (REFER TO CHAPTER 7 OF CALTRANS TRAFFIC MANUAL FOR RECOMMENDED PLACEMENT OF GUARDRAIL ALONG EMBANKMENT.
5. IF THE VERTICAL CLEARANCE BETWEEN THE RECOVERY AREA AND THE HST STRUCTURE BENT CAP IS LESS THAN 16'-6" FEET, METAL BEAM GUARDRAIL OR CONCRETE BARRIER WILL BE REQUIRED 3'-0" FROM EDGE OF HST BENT CAP.

REV	DATE	BY	CHK	APP	DESCRIPTION

DESIGNED BY A. ABTAHI
DRAWN BY H. NGUYEN
CHECKED BY S. MILITELLO
IN CHARGE G. LUSHEROVICH
DATE 06/12/2013

PARSONS BRINCKERHOFF

CALIFORNIA HIGH-SPEED RAIL AUTHORITY

CALIFORNIA HIGH-SPEED TRAIN PROJECT
TECHNICAL MEMORANDUM

INTRUSION PROTECTION
HST ADJACENT TO HIGHWAY/ROADWAY

CONTRACT NO.
DRAWING NO. TM 2.1.7-E
SCALE NO SCALE
SHEET NO.

Huante 6/13/2013 3:19:55 PM CAHSRP.tbl CHSR_PDF_half_black.plt c:\projectwise\pb\projectwiseint\huante\dms10616\2.1.7-E.dgn

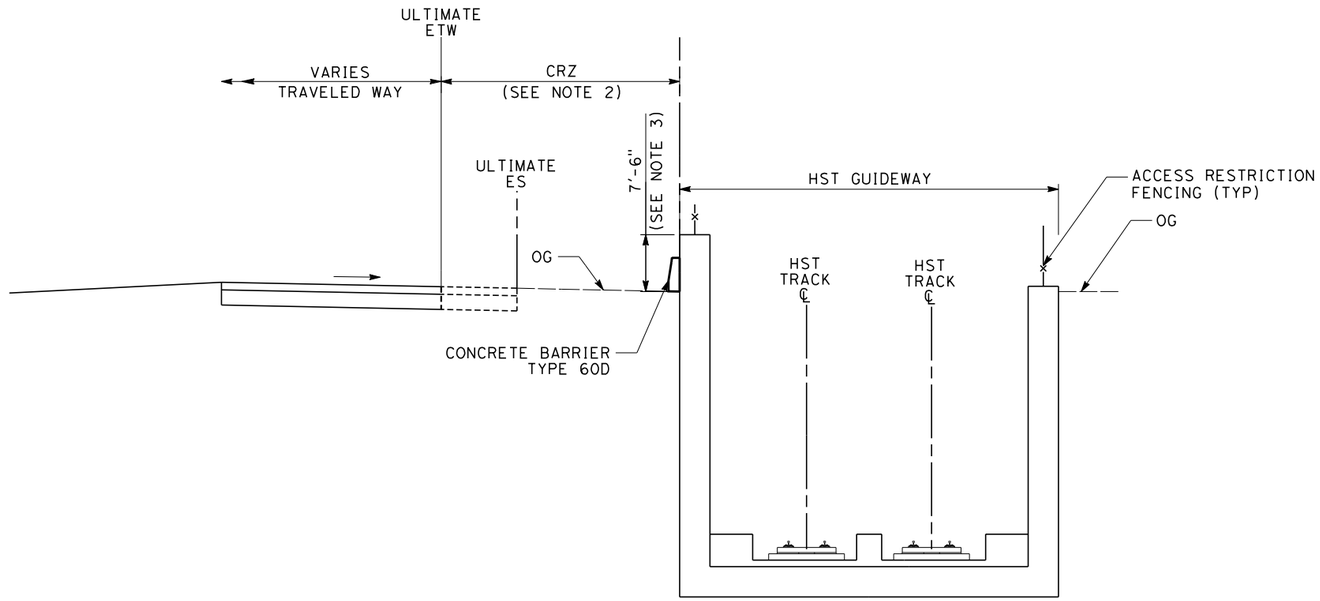

HIGHWAY/ROADWAY AT GRADE ADJACENT TO HST TRENCH

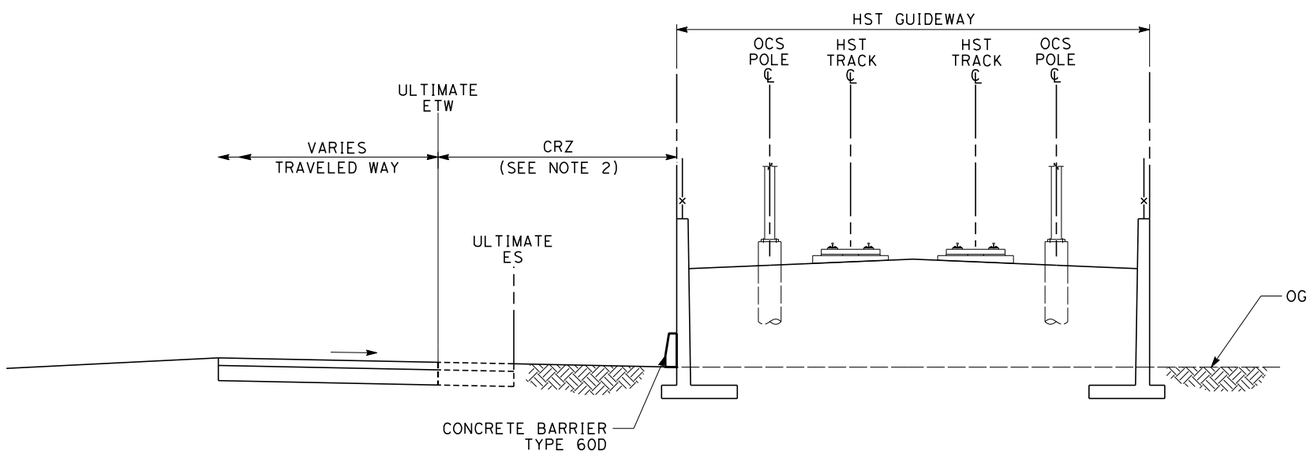

HIGHWAY/ROADWAY AT GRADE ADJACENT TO HST RETAINED FILL

NOTES:

1. TRACK, SYSTEMS AND DRAINAGE ARE SCHEMATIC AND DO NOT REPRESENT DESIGN.
2. IF THE DISTANCE BETWEEN HST WALL AND THE ULTIMATE ETW IS LESS THAN 52'-0", THE WALL HEIGHT SHALL BE 7'-6" ABOVE THE GROUND SURFACE AND CALTRANS CONCRETE BARRIER TYPE 60D SHALL BE INCLUDED IN CONSTRUCTION OF THE WALL.
3. FHWA RECOMMENDS 7'-6" FEET VERTICAL BARRIER TO CONTAIN HIGH CENTER OF GRAVITY CARGO TRUCKS WITHIN HIGHWAY RIGHT-OF-WAY.

REV	DATE	BY	CHK	APP	DESCRIPTION

DESIGNED BY A. ABTAHI
DRAWN BY H. NGUYEN
CHECKED BY S. MILITELLO
IN CHARGE G. LUSHEROVICH
DATE 06/12/2013

PARSONS BRINCKERHOFF

CALIFORNIA HIGH-SPEED RAIL AUTHORITY

CALIFORNIA HIGH-SPEED TRAIN PROJECT
TECHNICAL MEMORANDUM

INTRUSION PROTECTION
HST TRENCH AND RETAINING WALL PROTECTION

CONTRACT NO.
DRAWING NO. TM 2.1.7-F
SCALE NO SCALE
SHEET NO.

Huante 6/13/2013 3:21:22 PM CAHSRP.tbl CHSR_PDF_half_black.plt c:\projectwise\pb\projectwiseint\huante\dms10616\2.1.7-F.dgn

NOTES:

1. METAL BEAM GUARDRAIL OR CONCRETE BARRIER SHALL BE REQUIRED AT HST FIXED OBJECT IF THE DISTANCE FROM ULTIMATE ETW TO HST FIXED OBJECT IS LESS THAN 30'-0". REFER TO CHAPTER 7 OF CALTRANS TRAFFIC MANUAL AND CALTRANS STANDARD PLANS.

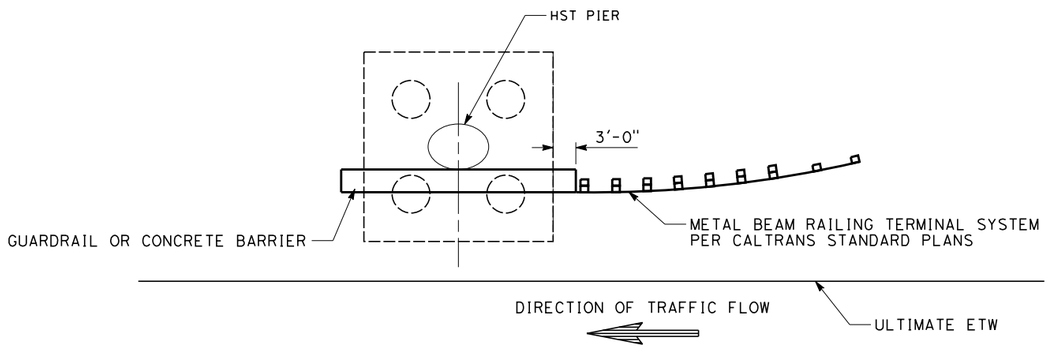

PLAN

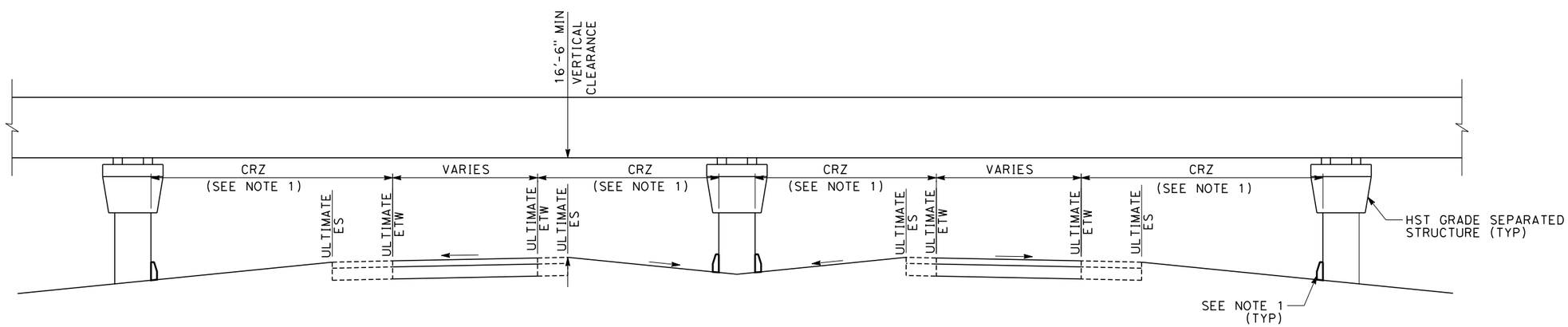

HST GRADE SEPARATED STRUCTURE OVER HIGHWAY/ROADWAY WITH MEDIAN

REV	DATE	BY	CHK	APP	DESCRIPTION

DESIGNED BY A. ABTAHI
DRAWN BY H. NGUYEN
CHECKED BY S. MILITELLO
IN CHARGE G. LUSHEROVICH
DATE 06/12/2013

PARSONS BRINCKERHOFF

CALIFORNIA HIGH-SPEED RAIL AUTHORITY

CALIFORNIA HIGH-SPEED TRAIN PROJECT
TECHNICAL MEMORANDUM

INTRUSION PROTECTION
HST PIER PROTECTION
IN HIGHWAY/ROADWAY RIGHT-OF-WAY

CONTRACT NO.
DRAWING NO. TM 2.1.7-G
SCALE NO SCALE
SHEET NO.

Huante 6/13/2013 3:22:37 PM CAHSRP.tbl CHSR_PDF_half_black.plt c:\projectwise\pb\projectwiseint\huante\dms10616\2.1.7-G.dgn

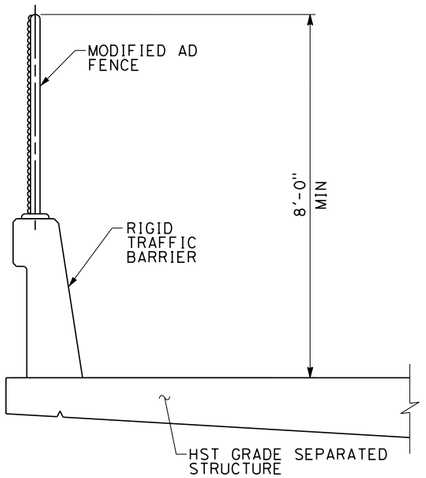

CROSS SECTION
FENCE AT GRADE SEPARATED STRUCTURES WITHOUT SIDEWALK

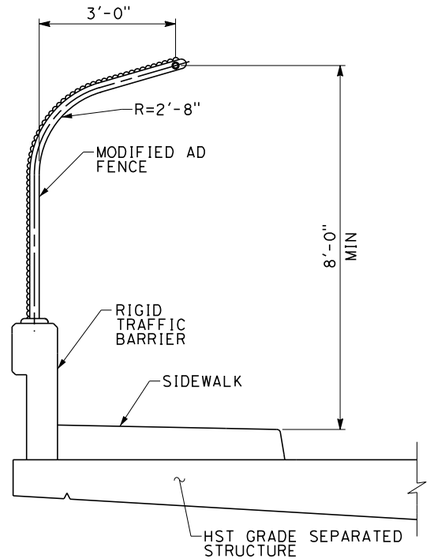

CROSS SECTION
FENCE AT GRADE SEPARATED STRUCTURES WITH SIDEWALK

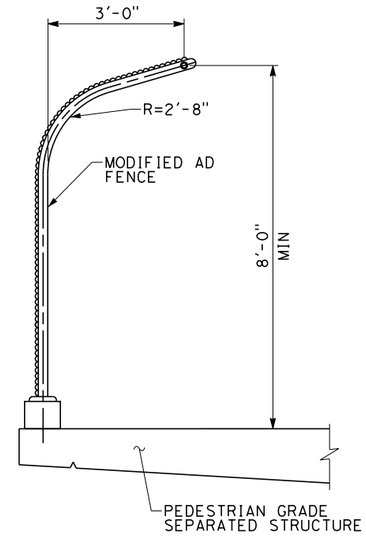

CROSS SECTION
FENCE AT PEDESTRIAN GRADE SEPARATED STRUCTURE

NOTES:

1. TRACK, SYSTEMS AND DRAINAGE ARE SCHEMATIC AND DO NOT REPRESENT DESIGN.
2. FOR SOLID BARRIER REQUIREMENT, SEE TM 3.2.6 "TES REQUIREMENTS FOR GROUNDING BONDING PROTECTION AGAINST ELECTRIC SHOCK".
3. EXTEND SOLID BARRIER 30 FEET FROM CENTERLINE OF OUTERMOST TRACK, OR 10 FEET BEYOND THE OUTERMOST ENERGIZED CONDUCTOR OR COMPONENT, WHICHEVER IS GREATER.

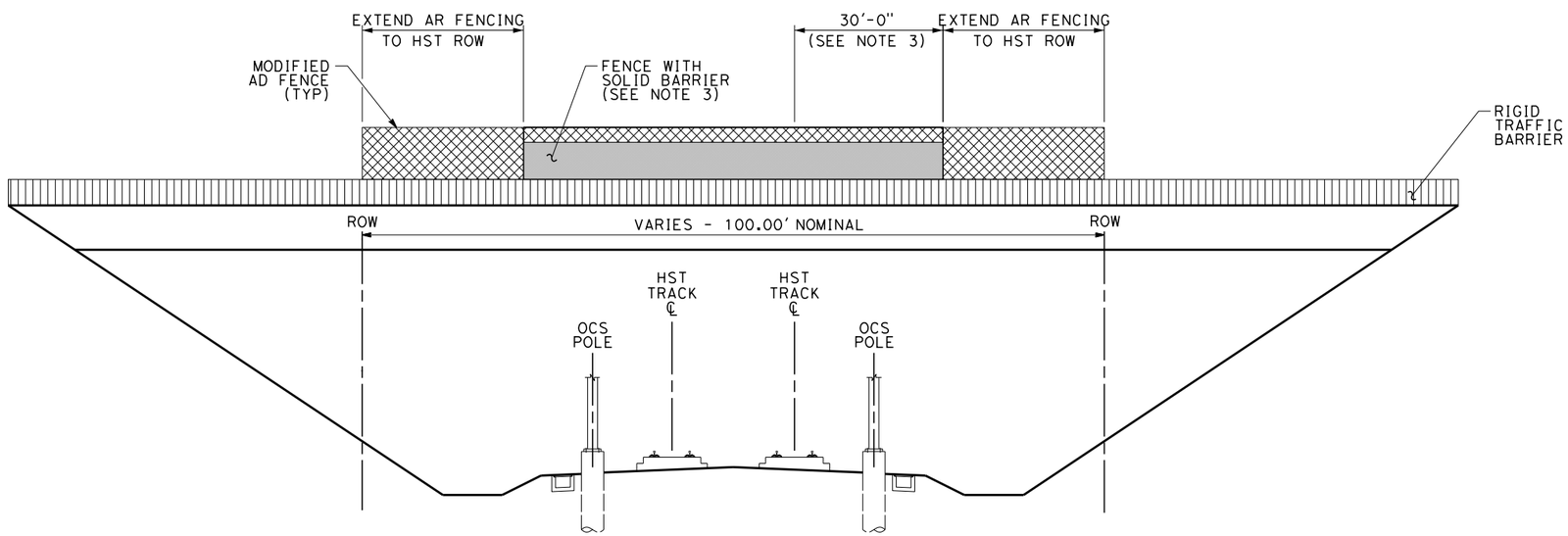

UNDERPASS STRUCTURE ELEVATION

REV	DATE	BY	CHK	APP	DESCRIPTION

DESIGNED BY A. ABTAHI
DRAWN BY H. NGUYEN
CHECKED BY S. MILITELLO
IN CHARGE G. LUSHEROVICH
DATE 06/12/2013

PARSONS BRINCKERHOFF

CALIFORNIA HIGH-SPEED RAIL AUTHORITY

CALIFORNIA HIGH-SPEED TRAIN PROJECT
TECHNICAL MEMORANDUM

INTRUSION PROTECTION
PROTECTIVE RAILING ON OVERHEAD STRUCTURES

CONTRACT NO.
DRAWING NO. TM 2.1.7-H
SCALE NO SCALE
SHEET NO.

Huante 6/13/2013 3:23:50 PM CAHSRP.tbl CHSR_PDF_half_black.plt c:\projectwise\pb\projectwiseint\huante\dms10616\2.1.7-H.dgn

PARSONS BRINCKERHOFF

Parsons Brinckerhoff
303 Second Street, Suite 700 North
San Francisco, CA 94107-1317
415-243-4600
Fax: 415-243-0113

June 17, 2013 PMT-CHSRA-03436

Frank Vacca
Chief Program Manager
California High-Speed Rail Authority
770 L Street, Suite 800
Sacramento, CA 95814

RE: Request for Authority review and concurrence of TM 2.1.7 Rolling Stock and Vehicle Intrusion Protection for High-Speed Rail and Adjacent Transportation Systems, R1

Mr. Vacca,

The California High-Speed Train System (CHSTS) will operate adjacent to, in close proximity, or within a right-of-way with other transportation systems at locations along the high-speed train (HST) alignments. These transportation systems include passenger railroads, freight railroads, and highways/roadways. HST operation within shared rights-of-way is a safety issue for both the CHSTS and the existing transportation systems. Identification and mitigation of the risk of intrusion will allow the high-speed trains to operate safely adjacent to existing transportation systems.

The purpose of this technical memorandum is to review current requirements and practices by other operators and to provide a basis of design for the safe separation of HST line from adjacent transportation systems in order to:

- Prevent errant railroad or highway vehicles from an adjacent or overhead facility from intruding into the HST facilities and its operating space
- Prevent a derailed high-speed vehicle from intruding into the operating space of an adjacent railroad or highway
- Prevent a derailed high-speed vehicle from falling from an elevated track
- Evaluate proposed HST lines located adjacent to or in proximity of right-of-way of passenger railroads, freight railroads, and highways in order to determine the level of exposure. Site-specific considerations will be required to assess the appropriateness for intrusion protection.

TM 2.1.7 Intrusion Protection, R1 is a revision to a previously released technical memorandum. It incorporates PMO review comments and following updated and new information:

- Introduces of Caltrans Clear Recovery Zone requirements along high-speed train corridors
- Introduces UPRR's requirement that the 102 feet separation be measured from their ROW line rather than to the closest track centerline
- Establishes the minimum lateral and vertical distances for a ditch to serve as an intrusion barrier

PARSONS BRINCKERHOFF

Parsons Brinckerhoff
303 Second Street, Suite 700 North
San Francisco, CA 94107-1317
415-243-4600
Fax: 415-243-0113

- Eliminates the condition for sharing an existing structure with another railroad (including the requirement for the intrusion protection wall in this condition)
- Provides a 3-foot separation between intrusion protection wall and HST ROW to allow the inspection and graffiti removal of the wall within HST ROW.

It is understood that this is a living document and will be updated as required. If this meets with your requirements, please sign below acknowledging your concurrence for adoption and use on the program.

Regards,

Brent Felker, P.E.
Program Director

California High-Speed Rail Authority
Concurrence

Frank Vacca, Chief Program Manager

Date: 6-19-2013

Enclosure: TM 2.1.7 Rolling Stock and Vehicle Intrusion Protection, R1