California High-Speed Rail Authority

RFP No.: HSR 14-32

Request for Proposals for Design-Build Services for Construction Package 4

Book III, Part B.1

Directive Drawings

RFP No. HSR 14-32 – INITIAL RELEASE - 05/27/2015

CIVIL DIRECTIVE NOTES

A. GENERAL SITE NOTES

1. FIELD VERIFY ALL EXISTING SITE CONDITIONS PRIOR TO THE COMMENCEMENT OF WORK AND REPORT ANY DISCREPANCIES TO THE AUTHORITY'S REPRESENTATIVE.

2. ALL CONSTRUCTION ACTIVITIES AFFECTING THIRD PARTY FACILITIES SHALL BE COORDINATED WITH THE PROPER JURISDICTION AUTHORITY.

3. FOR ABBREVIATIONS, SEE GENERAL DIRECTIVE DRAWINGS.

4. FOR SYMBOLS, SEE GENERAL DIRECTIVE DRAWINGS.

5. "ORIGINAL GROUND" SHOWN ON CROSS SECTIONS REFERS TO THE APPROXIMATE EXISTING GROUND LINE AT THE DESIGNATED CENTERLINE, BASELINE, LAYOUT LINE OR SECTION LINE.

6. ALL WORK SHALL CONFORM TO ALL LOCAL, STATE AND FEDERAL CODES AND ORDINANCES IN EFFECT.

7. PROVIDE AND MAINTAIN PROPER BARRICADES, RAILINGS, GUARDS, FLAGGING, LIGHTING, OR OTHER DEVICES NECESSARY FOR THE PROTECTION OF LIFE AND PROPERTY.

8. VERIFY ALL CONTROLLING FIELD DIMENSIONS BEFORE ORDERING OR FABRICATING MATERIALS.

B. GRADING

1. DO NOT PERFORM ANY GRADING OPERATION SO AS TO CAUSE FALLING ROCKS, SOIL OR DEBRIS IN ANY FORM TO FALL, SLIDE OR FLOW ONTO ADJOINING PROPERTIES, STREETS OR NATURAL WATERCOURSES. SHOULD SUCH VIOLATION OCCUR THE CONTRACTOR MAY BE CITED AND THE CONTRACTOR SHALL IMMEDIATELY MAKE ALL REMEDIAL ACTIONS NECESSARY.

2. KEEP THE PROJECT AREA AND SURROUNDING AREA FREE FROM DUST NUISANCE.

3. PROVISIONS SHALL BE MADE TO PREVENT SURFACE WATERS FROM DAMAGING THE CUT FACE OF AN EXCAVATION OR THE SLOPED SURFACES OF A FILL. FURTHERMORE, PROVISIONS SHALL BE MADE TO PREVENT SEDIMENT-LADEN RUNOFF FROM LEAVING THE SITE.

4. THE LIMITS OF THE AREA TO BE GRADED SHALL BE FLAGGED BEFORE THE COMMENCEMENT OF THE GRADING WORK.

5. ALL GRADING OPERATIONS SHALL BE PERFORMED IN CONFORMANCE WITH THE APPLICABLE PROVISIONS OF THE WATER POLLUTION CONTROL AND WATER QUALITY STANDARDS CONTAINED IN THE LATEST CALTRANS STORM WATER QUALITY HANDBOOKS.

RFP No. HSR 14-32 – INITIAL RELEASE - 05/27/2015

2/11/2014 4:59:51 PM CAHSRP.tbl CHSR_half_black.plt c:\projectwise\pb\projectwiseint\mincio\dms32160\DD-GE-001.dgn mincio

REV	DATE	BY	CHK	APP	DESCRIPTION

DESIGNED BY S. MILITELLO
DRAWN BY R. MINCIO
CHECKED BY H. NGUYEN
IN CHARGE J. CHIRCO
DATE 01/24/2014

PARSONS BRINCKERHOFF

CALIFORNIA HIGH-SPEED RAIL AUTHORITY

CALIFORNIA HIGH-SPEED TRAIN PROJECT
GENERAL DIRECTIVE

GENERAL DIRECTIVE NOTES
CIVIL

CONTRACT NO.
DRAWING NO. DD-GE-001
SCALE NO SCALE
SHEET NO.

TRACK DIRECTIVE NOTES

1. THE GENERAL BASIS FOR TRACK STANDARDS AND MATERIALS SHALL BE THE AREMA MANUAL.

2. TRACK AND TRACK COMPONENTS SHALL BE DESIGNED AND FABRICATED TO PERFORM UNDER THE PREVAILING AND EXTREME CLIMATIC AND ENVIRONMENTAL CONDITIONS OCCURRING WITHIN THE GEOGRAPHIC EXTENT OF THE SYSTEM.

3. THE PROFILE GRADE LINE IS CARRIED ON THE TOP OF LOW RAIL THROUGH HORIZONTAL CURVES AND SPIRALS FOR THE DESIGNATED TRACK.

4. THE LENGTHS OF TRACK IS BASED ON CENTER OF TRACK ALIGNMENT.

5. UNLESS SEPARATE TRACK PROFILES ARE GIVEN, TRACK PARALLEL TO THE DESIGNATED TRACK ARE AT THE SAME TOP OF RAIL ELEVATIONS PROJECTED ON EITHER PERPENDICULAR OR RADIAL LINES FROM THE DESIGNATED TRACK CENTERLINES.

6. BALLASTED TRACKS ARE GENERALLY PREFERRED FOR YARD TRACKS. DESIGNERS SHALL FOLLOW THE REQUIREMENTS ASSOCIATED WITH CONSTRUCTION OF BALLASTED TRACK IN THE CALIFORNIA HIGH SPEED TRAIN DESIGN MANUAL.

RFP No. HSR 14-32 – INITIAL RELEASE - 05/27/2015

2/11/2014 5:04:06 PM CAHSRP.tbl CHSR_half_black.plt c:\projectwise\pb\projectwiseint\mincio\dms32160\DD-GE-002.dgn mincio

REV	DATE	BY	CHK	APP	DESCRIPTION

DESIGNED BY S. MILITELLO
DRAWN BY R. MINCIO
CHECKED BY H. NGUYEN
IN CHARGE J. CHIRCO
DATE 01/24/2014

PARSONS BRINCKERHOFF

CALIFORNIA HIGH-SPEED RAIL AUTHORITY

CALIFORNIA HIGH-SPEED TRAIN PROJECT
GENERAL DIRECTIVE

GENERAL DIRECTIVE NOTES
TRACK

CONTRACT NO.
DRAWING NO. DD-GE-002
SCALE NO SCALE
SHEET NO.

STRUCTURAL DIRECTIVE NOTES:

A. SPECIFICATIONS FOR DESIGN AND CONSTRUCTION

1. CONSTRUCTION SPECIFICATION SHALL BE THE DESIGN-BUILD STANDARD SPECIFICATION, CALIFORNIA HIGH SPEED TRAIN.

2. THE STRUCTURAL DESIGN OF STRUCTURES SUPPORTING HIGH SPEED TRAINS SHALL BE BASED ON THE REQUIREMENTS OF THE CALIFORNIA HIGH SPEED RAIL AUTHORITY.

3. DESIGN CRITERIA FOR HIGHWAY BRIDGES SHALL BE THE CALIFORNIA BRIDGE DESIGN SPECIFICATION. FOR HIGHWAY BRIDGES PASSING OVER THE HIGH SPEED TRAIN THE BRIDGE DESIGN SPECIFICATION SHALL BE SUPPLEMENTED BY THE CALIFORNIA HIGH SPEED TRAIN REQUIREMENTS FOR SEISMIC DESIGN.

4. DESIGN CRITERIA FOR RAILROAD STRUCTURES NOT SUPPORTING HIGH SPEED TRAINS SHALL BE THE AMERICAN RAILWAY ENGINEERING AND MAINTENANCE-OF-WAY ASSOCIATION (AREMA) MANUAL FOR RAILWAY ENGINEERING (APRIL 2008). FOR RAILROAD BRIDGES PASSING OVER THE HIGH SPEED TRAIN THE BRIDGE DESIGN SPECIFICATION SHALL BE SUPPLEMENTED BY THE CALIFORNIA HIGH SPEED TRAIN REQUIREMENTS FOR SEISMIC DESIGN.

B. DESIGN METHOD

1. DESIGN SHALL BE PERFORMED TO THE LOAD AND RESISTANCE FACTOR (LRFD) DESIGN METHOD.

2. THE DESIGN OF PRESTRESSING AND PARTIAL PRESTRESSING SHALL CONFORM TO THE REQUIREMENTS OF SUBSECTION 5.9 OF AASHTO LRFD WITH CALIFORNIA AMENDMENTS WITH THE FOLLOWING EXCEPTION: NET TENSION STRESSES ARE NOT ALLOWED IN THE PRECOMPRESSED TENSILE ZONE AFTER ALL LOSSES HAVE OCCURRED.

C. GENERAL

1. SEE GENERAL DIRECTIVE DRAWINGS FOR ACRONYMS AND ABBREVIATIONS.

2. ALL STRUCTURAL DRAWINGS SHALL BE READ IN CONJUNCTION WITH THE SPECIFICATIONS AND ALL OTHER DRAWINGS RELATED TO THE WORK.

3. EMBEDDED ITEMS SUCH AS PIPES, INSERTS, SLEEVES AND CONDUITS, AND ANY RECESSES, NICHES OR OPENINGS REQUIRED FOR UTILITY, ARCHITECTURAL, MECHANICAL AND ELECTRICAL INSTALLATIONS ARE NOT SHOWN ON THE STRUCTURAL DRAWINGS. CONTRACTOR SHALL REFER TO THE UTILITY, ARCHITECTURAL, MECHANICAL AND ELECTRICAL DRAWINGS FOR THE LOCATIONS AND DETAILS OF THESE ITEMS. CONTRACTOR SHALL REVIEW AND APPROVE ALL PENETRATIONS PRIOR TO CONSTRUCTION. PENETRATIONS WHICH LOCAL THICKENING OF CONCRETE OR STEEL MEMBERS AND /OR SUPPLEMENTAL REINFORCING SHALL BE SHOWN ON THE STRUCTURAL DRAWINGS.

4. THE VERTICAL CONTROL OF ALL TRACK STRUCTURES IS BASED ON THE TOP OF LOW RAIL ELEVATION IN SUPERELEVATED STRUCTURES.

5. CONTRACTORS ATTENTION IS DIRECTED TO THE AREAS OF SAG VERTICAL CURVES. IN SUCH AREAS CAUTION SHOULD BE EXERCISED THAT THE DIMENSION TO THE INVERT OF CONCRETE OF GUIDEWAY IS NEVER LESS THAN THAT SHOWN FOR INVERT DETAILS.

6. ALL CONSTRUCTION JOINTS IN EARTH RETAINING STRUCTURES AND IN STRUCTURES BELOW THE FINISH GRADE SHALL CONTAIN CONTINUOUS WATERSTOPS, AND SHALL HAVE REINFORCEMENT CONTINUOUS ACROSS ALL JOINTS. HYDROSWELLING STRIPS SHALL BE INSTALLED ON ALL JOINT SURFACES WHICH WILL BE EXPOSED TO EARTH AND PERMANENTLY UNDER THE GROUNDWATER ELEVATION.

7. ALL WATERSTOPS SHALL BE INSTALLED SECURELY IN ACCORDANCE WITH THE SPECIFICATIONS. THE WATERSTOPS SHALL BE PLACED CONTINUOUSLY THROUGHOUT THE LENGTH OF THE CONSTRUCTION JOINT. LAPPING OF WATERSTOPS SHALL NOT BE PERMITTED. SPLICING SHALL BE IN ACCORDANCE WITH THE SPECIFICATIONS.

8. UNLESS INDICATED OTHERWISE, CONCRETE SURFACES LEADING TO DRAINS SHALL BE SLOPED A MINIMUM OF $\frac{1}{8}$ INCH PER FOOT TOWARD THE DRAIN AND THE ADJACENT SURFACES WARPED AS REQUIRED TO SATISFY AN ADEQUATE DRAINAGE FLOW.

D. MATERIAL PROPERTIES

1. CONCRETE 28 DAY COMPRESSIVE STRENGTH (MINIMUM)

   a) DRILLED SHAFTS: f'c=4,000 PSI

   b) PRECAST-PRESTRESSED PILES: f'c=6,000 PSI

   c) FORMED CAST-IN-PLACE STRUCTURAL CONCRETE:
   f'c (UNDER GROUND)=4000 PSI
   f'c (ABOVE GROUND)=5000 PSI

   d) PRECAST GIRDERS OR SEGMENTS OF GIRDERS:
   f'c=6,000 PSI

   e) UNLESS NOTED OTHERWISE ON THE DRAWINGS, OR SPECIFIED, MINIMUM STRUCTURAL CONCRETE SHALL HAVE A MINIMUM 28 DAY COMPRESSIVE STRENGTH OF 4,000 PSI.

   f) ALL EXPOSED CONCRETE EDGES AND CORNERS SHALL BE CHAMFERED WITH A $\frac{3}{4}$ INCH, 45 DEGREE CHAMFER UNLESS NOTED OTHERWISE.

2. REINFORCING STEEL SHALL CONFORM TO THE SPECIFICATIONS OF ASTM A 706 GRADE 60.

3. PRESTRESSING STEEL

   a) STRAND: ASTM A416/AASHTO M203,
   GRADE 270, LOW RELAXATION
   FRICTION COEFFICIENT: 0.25
   WOBBLE COEFFICIENT: 0.0002 PER FT
   ANCHOR SET: 0.375"
   APPARENT MODULUS: 28,500 KSI
   MINIMUM JACKING STRESS: 216 KSI (80% ULTIMATE)
   MAXIMUM ANCHORING STRESS: 189 KSI (70% ULTIMATE)
   MAXIMUM STRESS AFTER ANCHOR SET: 202 KSI (75% ULTIMATE)
   STRAND DIAMETER: 0.6" (AREA=0.216 SQ IN)

   b) POST TENSIONING BARS:
   ASTM A722/AASHTO M275, GRADE 150, TYPE II
   ANCHOR SET: 0.0625"
   APPARENT MODULUS: 30,000 KSI
   MAXIMUM JACKING STRESS: 113 KSI
   MAXIMUM ANCHORING STRESS: 105 KSI
   MAXIMUM STRESS AFTER LOSSES: 96 KSI

4. STRUCTURAL STEEL SHAPES SHALL CONFORM TO ASTM A6 WITH A YIELD STRENGTH OF FY = 50 KSI UNLESS NOTED OTHERWISE. THE FOLLOWING MATERIAL PROPERTIES SHALL APPLY:

   a) WIDE FLANGE SHAPES: ASTM A992

   b) M-SHAPES, S-SHAPES, HP SHAPES: ASTM A572

   c) ANGLES, CHANNELS: ASTM A572

   d) RECTANGULAR AND SQUARE HSS: ASTM A500 GR B (46 KSI)

   e) ROUND HSS: ASTM A500 GR B (42 KSI)

   f) STEEL PIPE: ASTM A53 GR B (35 KSI)

   g) PLATES, BARS: ASTM A36 (36 KSI)

   h) BOLTS: ASTM A325

   i) NUTS: ASTM A563

   j) WASHERS: ASTM F436

5. STEEL FABRICATIONS

   a) WELDING OF BUILT UP MEMBERS AND STEEL FABRICATIONS SHALL COMPLY WITH AASHTO/AWS D 1.5

   b) WELDING OF HSS SECTIONS AND PIPES SHALL COMPLY WITH AWS D 1.1

   c) MISCELLANEOUS STEEL ITEMS SHALL BE HOT-DIP GALVANIZED AFTER FABRICATION UNLESS COMPLETELY EMBEDDED IN CONCRETE AND UNLESS NOTED OTHERWISE.

6. FASTENERS

   a) ALL HIGH STRENGTH BOLTS NUTS AND WASHERS SHALL BE ZINC COATED

   b) ALL BOLTED CONNECTIONS SHALL COMPLY WITH RESEARCH COUNCIL ON STRUCTURAL CONNECTIONS (RCSC) "SPECIFICATION FOR STRUCTURAL JOINTS USING ASTM A325 OR A490 BOLTS".

   c) ALL BOLTS ARE ASTM A325 HIGH STRENGTH SLIP CRITICAL WITH THREADS EXCLUDED FROM THE SHEAR PLANE

E. CONCRETE COVER

1. UNLESS OTHERWISE NOTED, MINIMUM CONCRETE COVER SHALL CONFORM TO AASHTO LRFD WITH CALTRANS AMENDMENTS TABLE 5.12.3-1 WITH THE FOLLOWING EXCEPTIONS:

   a) UNCASED DRILLED SHAFTS: 6 INCHES

   b) CASED DRILLED SHAFTS WITH TEMPORARY CASING: 4 INCHES

F. SEISMIC LOADING AND DESIGN

1. THERE ARE TWO LEVELS OF DESIGN EARTHQUAKES:

   a) MAXIMUM CONSIDERED EARTHQUAKE (MCE): GROUND MOTIONS CORRESPONDING TO GREATER OF (1) A PROBABILISTIC SPECTRUM BASED UPON A 10% PROBABILITY OF EXCEEDANCE IN 100 YEARS (i.e., A RETURN PERIOD OF 950 YEARS) AND (2) A DETERMINISTIC SPECTRUM BASED UPON THE LARGEST MEDIAN RESPONSE RESULTING FROM THE MAXIMUM RUPTURE (CORRESPONDING TO M_{max}) OF ANY FAULT IN THE VICINITY OF THE STRUCTURE.

   b) OPERATING BASIS EARTHQUAKE (OBE): GROUND MOTIONS CORRESPONDING TO A PROBABILISTIC SPECTRUM BASED UPON AN 86% PROBABILITY OF EXCEEDANCE IN 100 YEARS (i.e., A RETURN PERIOD OF 50 YEARS).

RFP No. HSR 14-32 – INITIAL RELEASE - 05/27/2015

REV	DATE	BY	CHK	APP	DESCRIPTION

DESIGNED BY P. LIN
DRAWN BY R. MINCIO
CHECKED BY T. JACKSON
IN CHARGE J. CHIRCO
DATE 08/29/2014

PARSONS BRINCKERHOFF

CALIFORNIA HIGH-SPEED RAIL AUTHORITY

CALIFORNIA HIGH-SPEED TRAIN PROJECT
GENERAL DIRECTIVE

GENERAL DIRECTIVE NOTES
STRUCTURAL

CONTRACT NO.
DRAWING NO. DD-GE-003
SCALE NO SCALE
SHEET NO.

LoverdeV 9/30/2014 11:27:03 AM CAHSRP.tbl CHSR_PDF_half_black.plt c:\projectwise\pb\projectwiseint\laverdev\dms32160\DD-GE-003.dgn

A

@	AT
A&E	ARCHITECTURAL AND ENGINEERING
A/G	AT-GRADE
AADT	AVERAGE ANNUAL DAILY TRAFFIC
AB	AGGREGATE BASE, ANCHOR BOLT
ABBC	ASBESTOS BONDED BITUMINOUS COATED
ABM	AIR-BLOWN MORTAR
ABN	ABANDON
ABUT	ABUTMENT
ABV	ABOVE
AC	ALTERNATING CURRENT, ASPHALT CONCRETE
ACB	ASPHALT CONCRETE BASE
ACMB	AC DISTRIBUTION PANEL MAIN BREAKER
ACOUS	ACOUSTICAL
ACP	ASBESTOS CEMENT PIPE
ACS	ACCESS CONTROL ROOM
ACSR	ALUMINUM CONDUCTOR STEEL REINFORCED
AD	AREA DRAIN, ACCESS DETERRING
ADJ	ADJACENT, ADJUST, ADJUSTABLE
ADL	ADDED DEAD LOAD
ADP	AC DISTRIBUTION PANEL
ADT	AVERAGE DAILY TRAFFIC
AEC	AERIAL EARTH (GROUND) CONDUCTOR
AED	AUTOMATED EXTERNAL DEFIBRILLATOR
AFC	AUTOMATIC FARE COLLECTION
AFES	ALTERNATIVE FLARED END SECTION
AGW	AERIAL GROUND WIRE
AHD	AHEAD
AL	ALUMINUM
ALIGN	ALIGNMENT
ALT	ALTERNATE
AM	TIME FROM MIDNIGHT TO NOON
ANC	ANCHOR
ANI	AUTOMATIC NUMBER IDENTIFICATION
ANN	ANNUNCIATOR
ANS	AMBIENT NOISE SENSOR
AP	ALTERNATIVE PIPE
APC	ALTERNATIVE PIPE CULVERT
APE	AREA OF POTENTIAL EFFECTS
APEFZ	ALQUIST-PRIOLO EARTHQUAKE FAULT ZONE
API	APPLICATION PROGRAMMING INTERFACE
APPROX	APPROXIMATE
APU	ALTERNATIVE PIPE UNDERDRAIN
AR	ACCESS RESTRICTION
ARCH	ARCHITECTURAL
ARS	ACCELERATION RESPONSE SPECTRUM
AS	AGGREGATE SUBBASE
ASPH	ASPHALT
ASRP	ALUMINUM SPIRAL RIB PIPE
ASSY	ASSEMBLY
AT	AUTOTRANSFORMER, AUTOMATIC TENSION
ATC	AUTOMATIC TRAIN CONTROL
ATEL	ADMINISTRATIVE TELEPHONE
ATM	ALONG TRACK MOVEMENT
ATO	AUTOMATIC TRAIN OPERATION
ATP	AUTOMATIC TRAIN PROTECTION
ATPB	ASPHALT TREATED PERMEABLE BASE
ATPM	ASPHALT TREATED PERMEABLE MATERIAL
ATR	ABOVE TOP OF RAIL
ATS	AUTOMATIC TRAIN SUPERVISION, AUTOTENSIONED SYSTEM
AUX	AUXILARY
AVE	AVENUE
AVG	AVERAGE
AVL	AUTOMATIC VEHICLE LOCATION
AWG	AMERICAN WIRE GAUGE

B

B/SPAN	BODY SPAN
B/W	BLACK & WHITE
BAGR	BRIDGE APPROACH GUARD RAILING
BAR	BARRIER
BAT	BATTERY
BB	BEGINNING OF BRIDGE
B-B	BACK-TO-BACK
BC	BOLT CIRCLE

B CONTINUED

BCR	BEGIN CURB RETURN
BD	BOARD
BDA	BI-DIRECTIONAL AMPLIFIER
BDD	BRIDGE DESIGN DETAILS (CALTRANS)
BDP	BRIDGE DESIGN PRACTICE (CALTRANS)
BDS	BRIDGE DESIGN SPECIFICATIONS (CALTRANS)
BEC	BURIED EARTH (GROUND) CONDUCTOR
BEG	BEGIN
BFA	BY PASS FEEDER ANCHOR
BIL	BASIC IMPULSE INSULATION LEVEL
BITUM	BITUMINOUS
BK	BACK
BKF	BACKFILL
BKR	BREAKER
BL	BASE LINE
BLDG	BUILDING
BLKG	BLOCKING
BLM	BRIDGE-LOG MILE
BLST	BALLAST
BLVD	BOULEVARD
BM	BENCH MARK
BN	BACKBONE NETWORK
BND	BOUND
BOC	BOTTOM OF CURB
BOCC	BACK-UP OPERATIONAL CONTROL CENTER
BOS	BOTTOM OF SLOPE
BOT	BOTTOM
BOW	BOTTOM OF WALL
BR	BRIDGE
BRG	BEARING
BRKT	BRACKET
BRS	BROADBAND RADIO SYSTEM
BRT	BUS RAPID TRANSIT
BS	BODY SPAN WIRE
BSC	BASE STATION CONTROLLER
BT	BUS TIE
BTM	BOTTOM
BTS	BASE TRANSCEIVER STATION
BTWN	BETWEEN
BW	BARBED WIRE, BALANCE WEIGHT
BWA	BALANCE WEIGHT ANCHOR
BWLAN	BROADBAND WIRELESS LOCAL AREA NETWORK
BZ	BRONZE

C

C	CLOSE, CONTACT, CONTROL
CA	CERTIFICATION ACCEPTANCE
CAA	CABLE ANCHOR ASSEMBLY
CAB	CABINET
CADD	COMPUTER-AIDED DESIGN AND DRAFTING
CAH	CONTROLLED ACCESS HIGHWAY
CAI	CUSTOMER ASSISTANCE INTERCOM
CALP	CORRUGATED ALUMINUM PIPE
CANT	CANTILEVER
CAP	CAPACITY, CAPACITOR, CORRUGATED ALUMINUM PIPE
CAPA	CORRUGATED ALUMINUM PIPE ARCH
CAS	CONSTRUCTION AREA SIGN
CAT	CATEGORY, CATEGORY SPECIFICATION FOR TWISTED PAIR CABLING, CATENARY
CATF	CANTENARY FOUNDATION
CATP	CATENARY POLE
CB	CATCH BASIN, CIRCUIT BREAKER CONCRETE BARRIER
CBTC	COMMUNICATIONS BASED TRAIN CONTROL
CBW	CONCRETE BLOCK WALL
C-C	CENTER LINE TO CENTER LINE
CCO	CONTRACT CHANGE ORDER
CCS	CALIFORNIA COORDINATE SYSTEM
CCTV	CLOSED CIRCUIT TELEVISION
CCVT	COUPLING CAPACITOR VOLTAGE TRANSFORMER
CEG	CERTIFIED ENGINEERING GEOLOGIST

C CONTINUED

CEM	CEMENT
CER	COMMUNICATIONS EQUIPMENT ROOM
C&G	CURB & GUTTER
CG	CENTER OF GRAVITY
CGS	CALIFORNIA GEOLOGICAL SURVEY
CHNL	CHANNEL
CI	CAST IRON
CIC	COMMUNICATIONS INTERFACE CABINET
CIDH	CAST-IN-DRILLED-HOLE
CIF	COMMON INTERMEDIATE FORMAT
CIP	CAST IRON PIPE
C-I-P	CAST-IN-PLACE
CIPCP	CAST-IN-PLACE CONCRETE PIPE
CIS	CUSTOMER INFORMATION SIGN
CISS	CAST-IN-STEEL-SHELL
CJ	CONSTRUCTION JOINT
CJP	COMPLETE JOINT PENETRATION
CKT	CIRCUIT
CL	CLASS
CL2	CLASS 2
CL-6	CHAIN LINK FENCE (6 FT)
CLG	CEILING
CLK	CHAIN LINK
CLKG	CAULKING
CLO	CLOSET
CLR	CLEAR, CLEARANCE
CM	CONTROL MODULE, CORRUGATED METAL
CMP	CORRUGATED METAL PIPE
CMU	CONCRETE MASONRY UNIT
CNTR	COUNTER
CO	CLEANOUT, COUNTY
COL	COLUMN
COMM	COMMUNICATIONS
CONC	CONCRETE
COND	CONDUIT
CONN	CONNECTOR, CONNECTION
CONST	CONSTRUCT, CONSTRUCTION
CONT	CONTINUOUS, CONTINUATION
CONTR	CONTRACTOR
COORD	COORDINATE
CORR	CORRIDOR
CP	CONTROL POINT
CPT	CONE PENETRATION TEST, CONTROL POWER TRANSFORMER
CPU	CENTRAL PROCESSING UNIT
CR	CREEK, CONDUIT RISER
CRC	COMBINED RELAY AND CONTROL PANEL
CRCP	CONTINUOUS REINFORCED CONCRETE PAVEMENT
CRSP	CONCRETED ROCK SLOPE PROTECTION
CRZ	CLEAR RECOVERY ZONE
CS	CONTROL SWITCH
CSA	CONSTRUCTION STAGING AREA
CSP	CORRUGATED STEEL PIPE
CSPA	CORRUGATED STEEL PIPE ARCH
CT	CERAMIC TILE, COURT, CURRENT TRANSFORMER/TRANSDUCER
CTB	CEMENT TREATED BASE
CTPB	CEMENT TREATED PERMEABLE BASE
CTPM	CEMENT TREATED PERMEABLE MATERIAL
CTR	CENTER
CTSK	COUNTERSUNK
CTVT	COMBINED CURRENT TRANSFORMER AND VOLTAGE TRANSFORMER
CTW	COUNTERWEIGHT TAIL WIRE
CU	COPPER
CULV	CULVERT
CV	CURVE
CVR	COVER
CW	CONTACT WIRE
CWA	CONTACT WIRE ANCHOR
CWH	CONTACT WIRE HEIGHT
CWR	CONTINUOUSLY WELDED RAIL
CWT	COUNTER WEIGHT

D

D	DEPTH
DB	DESIGN-BUILD
DBE	DESIGN BASIS EARTHQUAKE
DBL	DOUBLE
DC	DIRECT CURRENT
DCMB	Dc DISTRIBUTION PANEL MAIN BREAKER
DCP	Dc DISTRIBUTION PANEL
DD	DOWNDRAIN, DEVICE DRIVER
DE	DEAD END
DEL	DELINEATOR
DEMO	DEMOLISH
DEPT	DEPARTMENT
DET	DETOUR
DF	DIRECT FIXATION, DRINKING FOUNTAIN
DGA	DOWN GUY ANCHOR
DHV	DESIGN HOURLY VOLUME
DI	DRAINAGE INLET
DIAG	DIAGONAL
DIAPH	DIAPHRAGM
DIFF	DIFFERENTIAL
DIM	DIMENSION
DIN	DROP INLET
DIR	DIRECTION
DISC	DISCONNECT
DISP	DISPENSER
DIST	DISTANCE
DISTR	DISTRIBUTION
DMBB	DOUBLE METAL BEAM BARRIER
DN	DOWN
DNS	DOMAIN NAME SYSTEM
DO	DOOR OPENING
DPDT	DOUBLE-POLE DOUBLE-THROW
DR	DRIVE
DS	DOWNSPOUT, DISCONNECT SWITCH
DSC	DIFFERING SITE CONDITIONS
DSCW	DIRECT SUSPENSION CONTACT WIRE
DSG	DISCONNECT SWITCH GROUP
DSHA	DETERMINISTIC SEISMIC HAZARD ANALYSIS
DST	DISTRICT
DTBB	DOUBLE THRIE BEAM BARRIER
DTM	DIGITAL TERRAIN MODEL
DVR	DIGITAL VIDEO RECORDERS
DWG	DRAWING
DWY	DRIVEWAY
DXO	DOUBLE CROSSOVER

E

E	EAST
EA	EACH
EB	EASTBOUND, END OF BRIDGE
EC	END HORIZONTAL CURVE, ELECTRICAL CONDUCTOR
ECR	END CURB RETURN
EE	EACH END
EF	EACH FACE
EGS	EMERGENCY GROUND SWITCH
EHS	EXTRA HIGH STRENGTH
EI	EMERGENCY INTERCOM
EJ	EXPANSION JOINT
E-LAN	ETHERNET LAN
ELAST	ELASTOMERIC
ELEC	ELECTRICAL, ELECTRIC
ELECT	ELECTROLIER
ELEV	ELEVATION
ELOCK	ELECTRONIC LOCK
EMB	EMBANKMENT
EMC	ELECTROMAGNETIC COMPATIBILITY
EMER	EMERGENCY
EMF	ELECTROMAGNETIC FIELD
EMI	ELECTRO MAGNETIC INTERFERENCE
EMS	ELEMENT MANAGEMENT SYSTEM
EMU	ELECTRIC MULTIPLE UNIT
ENCL	ENCLOSURE
ENGR	ENGINEER, ENGINEERING
EOB	END OF BRIDGE

RFP No. HSR 14-32 – INITIAL RELEASE - 05/27/2015

REV	DATE	BY	CHK	APP	DESCRIPTION

DESIGNED BY R. MINCIO
DRAWN BY V. LAVERDE
CHECKED BY S. MILITELLO
IN CHARGE G. LUSHEROVICH
DATE 08/29/2014

PARSONS BRINCKERHOFF

CALIFORNIA HIGH-SPEED RAIL AUTHORITY

CALIFORNIA HIGH-SPEED TRAIN PROJECT
DIRECTIVE DRAWING

ACRONYMS AND ABBREVIATIONS 1

CONTRACT NO.
DRAWING NO. DD-GE-100
SCALE NO SCALE
SHEET NO.

9/30/2014 11:20:29 AM CAHSRP.tbl CHSR_PDF_half_black.plt c:\projectwise\pb\projectwise\dms32160\DD-GE-100.dgn LaverdeV

E CONTINUED

EOD	EDGE OF DECK
EOS	ELECTRICAL OPERATED SWITCH
EOW	END OF WALL
EP	EDGE OF PAVEMENT
EPBM	EARTH PRESSURE BALANCING MACHINE
EPR	ETHYLENE PROPYLENE RUBBER
EQ	EQUAL, EQUILATERAL
EQN	EQUATION
EQUIP	EQUIPMENT
ES	EDGE OF SHOULDER, EXTRA STRENGTH, ELECTRICAL SECTION
ESA	ENVIRONMENTALLY SENSITIVE AREA
ESC	ESCALATOR
ESEW	EMERGENCY SHOWER / EYE WASH
ESMT	EASEMENT
ETCS	EUROPEAN TRAIN CONTROL SYSTEM
ETEL	EMERGENCY TELEPHONE
ETS	EMERGENCY TRIP SYSTEM
ETW	EDGE OF TRAVELED WAY
EW	EACH WAY, ENDWALL
EXC	EXCAVATION
EXIST	EXISTING
EXP	EXPANSION
EXPO	EXPOSED
EXWY	EXPRESSWAY
EXT	EXTERIOR

F

F/F	FACE TO FACE
F&C	FRAME AND COVER
F&G	FRAME AND GRATE
FA	FIRE ALARM
FACP	FIRE ALARM CONTROL PANEL
FAS	FIRE ALARM SYSTEM
FB	FLAT BAR, FLOOR BEAM, FEEDER BREAKER
FBO	FURNISHED BY OTHERS
FC	FARE COLLECTION
FD	FLOOR DRAIN
FDC	FIRE DEPARTMENT CONNECTION
FDN	FOUNDATION
FDP	FIBER DISTRIBUTION PANEL
FDR	FEEDER
FDU	FIBER DISTRIBUTION UNIT
FE	FIRE EXTINGUISHER
FES	FLARED END SECTION
FF	FILTER FABRIC
FFJ	FULL FEEDING JUMPER
FFL	FINISHED FLOOR LEVEL
FG	FINISHED GRADE
FH	FIRE HYDRANT
FHC	FIRE HOSE CABINET
FID	FIRE INITIATING DEVICE
FIG	FIGURE
FIN	FINISH
FIRM	FLOOD INSURANCE RATE MAPS
FJ	FEEDER JUMPER
FL	FLOW LINE
FLB	FLOOR BEAM
FLH	FLAT HEAD
FLR	FLOOR
FNA	FIRE NOTIFICATION APPLIANCE
FO	FIBER OPTIC
FOC	FIBER OPTIC CABLE, FACE OF CURB
FOCN	FIBER OPTIC CABLING NETWORK
FOF	FACE OF FINISH
FOP	FACE OF POLE
FOS	FACE OF STUDS, FACTOR OF SAFETY
FP	FULL PENETRATION
FPLM	FULL SPAN PRECAST LAUNCHING
FPRF	FIREPROOF
FPS	FRAMES PER SECOND
FR	FRAME
FREQ	FREQUENCY
FS	FINISHED SURFACE

F CONTINUED

FTEL	FIRE TELEPHONE
FTG	FOOTING
FTP	FILE TRANSFER PROTOCOL
FTW	FIXED END TAIL WIRE
FUT	FUTURE
FW	FEEDER WIRE
FWY	FREEWAY

G

G1	ENTRANCE GRADE
G2	EXIT GRADE
G/L	GROUND LINE
GALV	GALVANIZED
GCL	GRADING CONTROL LINE
GD	GRADE
GHS	GALVANIZED HIGH STRENGTH
GIGE	GIGABIT ETHERNET
GIS	GAS INSULATED SWITCH, GEOGRAPHIC INFORMATION SYSTEM
GL	GLASS
GMA	GROUND MOTION ANALYSIS
GND	GROUND
GO-95	PUC GENERAL ORDER 95
GP	GRADING PLANE
GPS	GLOBAL POSITIONING SYSTEM
GR	GUARDRAIL, GROUND ROD
GRP	GLASS REINFORCED PLASTIC ROD
GRS	GALVANIZED RIGID STEEL
GRX	GRADE CROSSING
GSHA	GEOLOGIC AND SEISMIC HAZARDS ANALYSIS
GSP	GALVANIZED STEEL PIPE
GT	GENERAL INFORMATION
GTGM	GEOTECHNICAL TECHNICAL GUIDANCE MANUAL (FHWA)
GTR	GUTTER
GW	GUY WIRE
GYP	GYPSUM
GYPBD	GYPSUM BOARD

H

H/SPAN	HEADSPAN
HAZ	HAZARDOUS
HB	HARDNESS BRINELL, HOSE BIBB
HC	HANDICAP
HD	HARD DRAWN, HORIZONTAL DRAIN
HDG	HOT DIP GALVANIZED
HDPE	HIGH DENSITY POLYETHYLENE
HDWE	HARDWARE
HDWL	HEADWALL
HEX	HEXAGONAL
HH	HANDHOLE, HEAD HARDENED
HI	HIGH
HI-RAIL	HIGHWAY TO RAILROAD VEHICLE
HM	HOLLOW METAL
HMA	HOT MIXED ASPHALT
HMI	HUMAN MACHINE INTERFACE
HO	HAND OPERATED
HOR	HORIZONTAL
HOV	HIGH-OCCUPANCY VEHICLE
HP	HIGH POINT, HINGE POINT
HP&R	HIGHWAY PLANTING AND RESTORATION
HPS	HIGH PERFORMANCE STEEL
HR	HANDRAIL
HRL	HIGH RAIL LEVEL
HS	HIGH STRENGTH
HSR	HIGH-SPEED RAIL
HST	HIGH-SPEED TRAIN
HT	HIGH TEMPERATURE
HTR	HEATER
HV	HIGH VOLTAGE

H CONTINUED

HVAC	HEATING VENTILATION AND AIR CONDITIONING
HW	HIGH WATER
HWM	HIGH WATER MARK
HWY	HIGHWAY

I

I/O	INPUT/OUTPUT
IB	IMPEDANCE BOND
IBC	INTERNATIONAL BUILDING CODE
IDS	INTRUSTION DETECTION CODE
IIMP	INTEGRATED INFORMATION MANAGEMENT PLATFORM
IJ	INSULATED JOINT
IJP	INSULATED JOINT PLUG
INSR	INSULATOR
INST	INSTANTANEOUS
INSUL	INSULATION
INT	INTERIOR
Inter-LATA	INTER-LOCAL ACCESS AND TRANSPORT AREA
INV	INVERT
IR	IN-RUNNING (RIDING CONTACT WIRE)
IRR	IRRIGATION
I/S	IN-SPAN
I/SJ	IN-SPAN JUMPER

J

J	JUMPER
JAN	JANITOR
JB	JUNCTION BOX
JCT	JUNCTION
JP	JOINT POLE
JT(S)	JOINT(S)

L

LA	LANDSCAPE ARCHITECT, LIGHTNING ARRESTER
LAM	LAMINATE
LAN	LOCAL AREA NETWORK
LAT	LATITUDE
LAV	LAVATORY
LC	LANDSCAPE CONTRACTOR
LCB	LEAN CONCRETE BASE
LCX	LOWER-LEVEL DESIGN BASIS EARTHQUAKE
LDBE	LEAKY COAXIAL RADIO CABLE
LED	LIGHT EMITTING DIODE
LF	LINEAR FEET
LG	LONG
LGT	LIGHT, LIGHTING
LH	LEFT-HAND
LKR	LOCKER
LL	LIGHT LOADING
LLT	LAST LONG TIE
LN	LANE
LO	LOCKOUT
LOC	LOCATION
LOL	LAYOUT LINE
LONG	LONGITUDE, LONGITUDINAL
LOS	LEVEL OF SERVICE
LOTB	LOGS OF TEST BORINGS
LP	LOW POINT, LOW PROFILE
LPL	LIGHT POLE
LR	LOW RAIL
LRFD	LOAD AND RESISTANCE FACTOR DESIGN
LRT	LIGHT RAIL TRANSIT
LRV	LIGHT RAIL VEHICLE
LS	LANDSCAPING, LUMP SUM
LT	LEFT
LV	LOW VOLTAGE
LVL	LEVEL
LVT	LOW VIBRATION TRACK
LWP	LOWER WORKING POINT

M

M	MEDIUM LOADING
MAINT	MAINTENANCE
MAT	MATERIAL
MAX	MAXIMUM
MB	METAL BEAM
MBB	METAL BEAM BARRIER
MBGR	METAL BEAM GUARD RAILING
MCC	MAINTENANCE CONTROL CENTER
MCE	MAXIMUM CONSIDERED EARTHQUAKE
MCR	MASTER CONTROL ROOM
MDS	MOBILE DATA SYSTEM
MECH	MECHANICAL
MED	MEDIAN
MEM	MEMBRANE
MESSGR	MESSENGER WIRE
MET	METAL
MFR	MANUFACTURER
MH	MANHOLE
MHHW	MEAN HIGHEST HIGH WATER
MI	MILD IRON
MIN	MINIMUM
MISC	MISCELLANEOUS
MKR	MARKER
ML	MAIN LINE
MLLW	MEAN LOWER LOW WATER
MMIS	MAINTENANCE MANAGEMENT INFORMATION SYSTEM
MO	MASONRY OPENING
MOC	MOTOR OPERATED CONTRACTOR
MOD	MODIFIED, MODIFY
MODC	MOTOR OPERATED DISCONNECT SWITCH
MOI	MAINTENANCE OF INFRASTRUCTURE
MON	MONUMENT
MOP	MOTOR OPERATED
MOS	MANUALLY OPERATED SWITCH
MOV	METAL-OXIDE VARISTOR
MOW	MAINTENANCE OF WAY
MP	MILEPOST
MPA	MIDPOINT ANCHOR
MPLS	MULTI-PROTOCOL LABEL SWITCHING
MR	MOVEMENT RATING
MSE	MECHANICALLY STABILIZED EMBANKMENT
MSF	MAINTENANCE AND STORAGE FACILITY
MSL	MEAN SEA LEVEL
MTD	MEMO TO DESIGNERS (CALTRANS), MOUNTED
MUL	MULLION
MVC	MINIMUM VERTICLE CLEARANCE
MW	MESSENGER WIRE

N

N	NORTH
N/A	NOT APPLICABLE
NAVD	NORTH AMERICAN VERTICAL DATUM
NB	NORTHBOUND
NBR	NONBRIDGING
NCL	NO COLLAPSE PERFORMANCE LEVEL
NDP	NONLINEAR DYNAMIC PROCEDURE
NEC	NATIONAL ELECTRICAL CODE
NEG	NEGATIVE
NEUT	NEUTRAL
NF	NEGATIVE FEEDER, NEAR FACE
NGVD	NATIONAL GEODETIC VERTICAL DATUM
NI	NETWORK INTERFACE
NIC	NOT IN CONTRACT
NMS	NETWORK MANAGEMENT SYSTEM
NO.	NUMBER
NO	NORMALLY OPEN
NOM	NOMINAL
NP	NETWORK PORT
NPRM	NOTICE OF PROPOSED RULE MAKING
NPS	NOMINAL PIPE SIZE
NR	NOT REGISTERED
NS	NOT SUPPORTED
NT	NETWORK
NTP	NETWORK TIME PROTOCOL, NOTICE TO PROCEED
NTS	NETWORK TIME SERVER, NOT TO SCALE

RFP No. HSR 14-32 – INITIAL RELEASE - 05/27/2015

REV	DATE	BY	CHK	APP	DESCRIPTION

DESIGNED BY R. MINCIO
DRAWN BY V. HUANTE
CHECKED BY S. MILITELLO
IN CHARGE J. CHIRCO
DATE 01/24/2014

PARSONS BRINCKERHOFF

CALIFORNIA HIGH-SPEED RAIL AUTHORITY

CALIFORNIA HIGH-SPEED TRAIN PROJECT
DIRECTIVE DRAWING

ACRONYMS AND ABBREVIATIONS 2

CONTRACT NO.
DRAWING NO. DD-GE-101
SCALE NO SCALE
SHEET NO.

2/11/2014 5:13:14 PM mincio c:\projectwise\pb\projectwise\mincio\dms32160\DD-GE-101.dgn CAHSRP.tbl CHSR_half_black.plt

O

O&M	OPERATIONS AND MAINTENANCE
OA	OVERALL
OBLR	OBLITERATE
OC	ON CENTER, OVERCROSSING
OCC	OPERATIONS CONTROL CENTER
OCS	OVERHEAD CONTACT SYSTEM
OF	OUTSIDE FACE
OFF	OFFSET
OG	ORIGINAL GROUND
OH	OVERHEAD
O-O	OUT TO OUT
OOR	OUT-OF-RUNNING (NONRIDING CONTACT WIRE)
OP	OVERPASS
OPL	OPERABILITY PERFORMANCE LEVEL
OPNG	OPENING
OPP	OPPOSITE
ORS	OPERATIONS RADIO SYSTEM
OSP	OUTSIDE PLANT
OVERTEMP	OVERTEMPERATURE

P

P/L	PROPERTY LINE
PA	PUBLIC ADDRESS
PACIS	PUBIC ADDDRESS / CUSTOMER INFORMATION SYSTEM
PAN	PANTOGRAPH
PAP	PERFORATED ALUMINUM PIPE
PB	PULL BOX, PUSH BUTTON (ON ELECTRICAL DIAGRAMS)
PBX	PRIVATE BRANCH EXCHANGE
PC	PRECAST CONCRETE
PCC	PORTLAND CEMENT CONCRETE
PCP	PERFORATED CONCRETE PIPE
PCPT	PIEZOCONE PENETROMETER TEST
PE	PORCELAIN ENAMEL
PED	PEDESTRIAN
PERF	PERFORATED
PERM	PERMEABLE
PET	POTENTIAL EQUALIZING JUMPER
PF	POWER FACTOR
PFDHA	PROBABILISTIC FAULT DISPLACEMENT HAZARD ANALYSIS
PG	PROFILE GRADE
PH	PHASE
PHE	POTHOLE
PID	PASSENGER INFORMATION DISPLAY
PITO	POINT OF INTERSECTION TURNOUT
PJP	PARTIAL JOINT PENETRATION
PL	PLATE
PLAM	PLASTIC LAMINATE
PLAS	PLASTER
PLC	PROGRAMMABLE LOGIC CONTROLLER
PLYWD	PLYWOOD
PM	POST MILE, TIME FROM NOON TO MIDNIGHT
PMS	PAVEMENT MANAGEMENT SYSTEM
PN	PAVING NOTCH
PNL	PANEL
PNT	POINT
PO	PULL OFF
POC	POINT OF CONNECTION
POE	POINT OF ENDING
POS	POSITIVE
POTS	PLAIN ORDINARY TELEPHONE SERVICE
PP	PLASTIC PIPE, POWER POLE
PPL	PREFORMED PERMEABLE LINER
PPP	PERFORATED PLASTIC PIPE
PR	PAIR
PRI	PRIMARY RATE INTERFACE (ISDN SERVICE)
PROP	PROPOSED
PS	PARALLELING STATION
P/S	PRESTRESSED, PERFORATED STEEL PIPE
PSP	PRODUCT SAFETY PLAN
PSTN	PUBLIC SWITCHED TELEPHONE NETWORK
PSTTWS	PUBLIC SAFETY TRENCH AND TUNNEL WIRELESS SYSTEM
PSU	POWER SUPPLY UNIT
PT	POTENTIAL TRANSFORMER
PTC	POSITIVE TRAIN CONTROL

P CONTINUED

PTD/R	PAPER TOWEL DISPENSER & RECEPTACLE
PTEL	PASSENGER ASSISTANCE TELEPHONE
PTM	PARKING TICKET MACHINE
PTT	PUSH TO TALK
PTZ	PAN-TILT-ZOOM
PUE	PUBLIC UTILITY EASEMENT
PVC	POLYVINYL CHLORIDE
PVMT	PAVEMENT
PWR	POWER

Q

QOS	QUALITY OF SERVICE
QT	QUARRY TILE
QTY	QUANTITY

R

R	RADIUS, RED
R/A	ROCK ANCHOR
R/W, ROW	RIGHT OF WAY
R&D	REMOVE AND DISPOSE
R&S	REMOVE AND SALVAGE
RA	REMOTE ANNUNCIATOR
RAID	REDUNDANT ARRAY OF INDEPENDENT DISKS
RB	RESILIENT BASE
RBM	RAILBOUND MANGANESE FROG
RC	REGIONAL CONSULTANT, REINFORCED CONCRETE
RCA	REINFORCED CONCRETE ARCH
RCB	REINFORCED CONCRETE BOX
RCC	REGIONAL CONTROL CENTER
RCE	REGISTERED CIVIL ENGINEER
RCP	REINFORCED CONCRETE PIPE
RCPA	REINFORCED CONCRETE PIPE ARCH
RD	ROAD, ROOF DRAIN
RDWY	ROADWAY
RE	RUNNING EDGE OF RAIL
REBAR	CONCRETE REINFORCING BAR
RECT	RECTANGULAR
REF	REFERENCE
REFP	REFERENCE POINT
REINF	REINFORCED, REINFORCEMENT, REINFORCING
REL	RELOCATE, RELOCATED
REM	REMOTE
REPL	REPLACEMENT
REQD	REQUIRED
RESIL	RESILIENT
RET	RETAINING
REV	REVISED, REVISION
RF	RADIO FREQUENCY
RFI	REQUEST FOR INFORMATION
RGS	RIGID GALVANIZED STEEL
RH	RIGHT-HAND
R-M	ROAD-MIXED
RM	RESTRICTED MANUAL, ROOM
RO	ROUGH OPENING
RP	RADIUS POINT
RR	RAILROAD, RUNNING RAIL
RRR	RESURFACING, RESTORATION, REHABILITATION (3R)
RRRR	RESURFACING, RESTORATION, REHABILITATION, RECONSTRUCTION (4R)
RRX	RAILROAD GRADE CROSSING
RSP	ROCK SLOPE PROTECTION
RT	RESILIENT TILE, RIGHT
RTE	ROUTE
RTU	REMOTE TERMINAL UNIT
RW	RETAINING WALL
RWL	RAIN WATER LEADER
RWY	RAILWAY

S

S	SOUTH, SLOPE
SAE	STRUCTURE APPROACH EMBANKMENT
SALV	SALVAGE
SAPP	STRUCTURAL ALUMINUM PLATE PIPE
SB	SOUTHBOUND
SC	SWITCH CABLE
SCADA	SUPERVISORY CONTROL AND DATA ACQUISITION
SCAT	SIMPLE CATENARY-AUTO TENSION
SCB	SUBSTATION CONTROL BUILDING
SCC	STATION CONTROL CENTER
SCD	SEAT COVER DISPENSER
SCFT	SIMPLE CATENARY-FIXED TENSION
SCHD	SCHEDULE
SCN	SECURITY CLASSIFICATION NUMBERS
SCPE	SEISMIC CAPACITY AND PERFORMANCE EVALUATION
SCSP	SLOTTED CORRUGATED STEEL PIPE
SD	STORM DRAIN
SDB	SYSTEM DUCT BANK
SDC	SEISMIC DESIGN CRITERIA
SDOF	SINGLE DEGREE OF FREEDOM
SE	SUPER ELEVATION
SECTLEG	SECTIONALIZING
SECT	SECTION
SEP	SEPARATION
SERV	SERVICE
SF	SPRING FROG
SG	SUBGRADE
SHA	SEISMIC HAZARDS ANALYSIS
SHLD	SHOULDER
SHS	STATE HIGHWAY SYSTEM
SHT	SHEET
SI	SECTION INSULATOR, SITE INVESTIGATION
SIG	SIGNAL
SIM	SIMILAR
SLAN	PASSENGER STATION LOCAL AREA NETWORK
SM	SELECTED MATERIAL
SMF	SOLID MANGANESE FROG, SINGLE MODE FIBER
SNF	SWING NOSE FROG
SNTP	SIMPLE NETWORK TIME PROTOCOL
SP	SPARE
SPC	SPECIAL
SPEC	SPECIFICATION
SPKR	SPEAKER
SPL	SAFETY PERFORMANCE LEVEL
SPS	SMALL PART STEELWORK
SPST	SINGLE POLE SINGLE THROW
SPT	STANDARD PENETRATION TEST
SQ	SQUARE
SR	SYSTEM REQUIREMENT, STATE ROUTE
SRRA	SAFETY ROADSIDE REST AREA
SRSS	SQUARE ROOT OF SUM OF SQUARES
S/SPAN	STEADY SPAN
SS	SLOPE STAKE, SUB STATION
SSCOM	SEISMIC SAFETY COMMISSION
SSI	SOIL STRUCTURE INTERACTION
SSK	SERVICE SINK
SSPA	STRUCTURAL STEEL PLATE ARCH
SSPP	STRUCTURAL STEEL PLATE PIPE
SSPPA	STRUCTURAL STEEL PLATE PIPE ARCH
SSRP	STEEL SPIRAL RIB PIPE
SST	STAINLESS STEEL
SSW	STEADY SPAN WIRE
SSWR	SANITARY SEWER
ST	STREET
STA	STATION, STATIONING
STBB	SINGLE THRIE BEAM BARRIER
STD	STANDARD
STC	SINGLE TRACK CANTILEVER
STIFF	STIFFENER
STL	STEEL
STOR	STORAGE
STP	SHIELDED TWISTED PAIR CABLE
STR	STRUCTURAL, STRUCTURE
STS	SPIRAL TANGENT SPIRAL
STW	STATIC WIRE
SUPV	SUPERVISORY

S CONTINUED

SURF	SURFACING
SUSP	SUSPENDED
SWK	SIDEWALK
SW	SOUND WALL, SOFTWARE
SWA	SINGLE WIRE ANCHOR
SWAT	SINGLE WIRE AUTO TENSIONED
SWFT	SINGLE WIRE-FIXED TERMINATION
SWGR	SWITCHGEAR
SWT	SWITCH
SWPPP	STORM WATER POLLUTION PREVENTION PLAN
SWR	SEWER
SWS	SWITCHING STATION
SYM	SYMMETRICAL

T

T	TREAD
T&B	TOP AND BOTTOM
TAN	TANGENT
TASAS	TRAFFIC ACCIDENT SURVEILLANCE ANALYSIS SYSTEM
TBD	TO BE DETERMINED
TBM	TUNNEL BORING MACHINE
TCL	TRACK CENTERLINE
TC	TRAIN CONTROL
TCB	TRAFFIC CONTROL BOX
TCC	TRAIN CONTROL AND COMMUNICATIONS
TCCR	TRAIN CONTROL AND COMMUNICATIONS ROOM
TCCT	TRACK CIRCUIT
TCE	TEMPORARY CONSTRUCTION EASEMENT
TCP/IP	TRANSMISSION CONTROL PROTOCOL/ INTERNET PROTOCOL
TCR	TRANSMISSION COMMUNICATIONS ROOM
TD	TRENCH DRAIN, TIME DELAY
TDA	TIRE DERIVED AGGREGATE
TDD	TELECOMMUNICATIONS DEVICE FOR THE DEAF
TDM	TIME DIVISION MULTIPLEXING
TEL	TELEPHONE
TEMP	TEMPORARY
TERM	TERMINATION
TES	TRACTION ELECTRIFICATION SYSTEM
TESC	TEMPORARY EROSION AND SETTLEMENT CONTROL
TETEL	TRAIN EMERGENCY TELEPHONE/SPEAKERPHONE
TFE	TETRAFLOUROETHYLENE
TG	TOP OF GRADE
THK	THICK
TIS	TELEPHONE AND INTERCOM SYSTEM
TL	TENSION LENGTH
TM	TECHNICAL MEMORANDUM
TMP	TEMPERATURE
TO	TURNOUT, TELECOM OUTLET
TOC	TOP OF CURB
TOG	TOP OF GRATE
TOL	TOLERANCE
TOLR	TOP OF LOW RAIL
TOF	TOP OF FOUNDATION
TOFG	TOP OF FINISH GRADE
TOP	TOP OF PAVEMENT
TOR	TOP OF RAIL
TOS	TOP OF SLOPE
TOT	TOP OF TIE, TOTAL
TOW	TOP OF WALL
TP	TELEPHONE POLE, TRACTION POWER
TPB	TREATED PERMEABLE BASE
TPD	TOILET PAPER DISPENSER
TPF	TRACTION POWER FACILITY
TPM	TREATED PERMEABLE MATERIAL
TPS	TRACTION POWER SUPPLY SYSTEM
TRANS	TRANSVERSE, TRANSITION
TRK	TRACK
TS	TRAFFIC SIGNAL TUBULAR STEEL
TSI	TECHNICAL SPECIFICATIONS FOR INTEROPERABILITY
TSM	TRAFFIC SYSTEMS MANAGEMENT
TSMP	TRAFFIC SYSTEMS MANAGEMENT PLAN

RFP No. HSR 14-32 – INITIAL RELEASE - 05/27/2015

REV	DATE	BY	CHK	APP	DESCRIPTION

DESIGNED BY R. MINCIO
DRAWN BY V. HUANTE
CHECKED BY S. MILITELLO
IN CHARGE J. CHIRCO
DATE 01/24/2014

PARSONS BRINCKERHOFF

CALIFORNIA HIGH-SPEED RAIL AUTHORITY

CALIFORNIA HIGH-SPEED TRAIN PROJECT
DIRECTIVE DRAWING

ACRONYMS AND ABBREVIATIONS 3

CONTRACT NO.
DRAWING NO. DD-GE-102
SCALE NO SCALE
SHEET NO.

c:\projectwise\pb\projectwiseint\mincio\dms32160\DD-GE-102.dgn
CHSR_half_black.plt
CAHSRP.tbl
2/11/2014 5:14:14 PM
mincio

T CONTINUED

TTC	TWO TRACK CANTILEVER
TTEL	TRAIN EMERGENCY SPEAKERPHONE
TV	TELEVISION
TVM(S)	TICKET VENDING MACHINE(S)
TW	TIE WIRE
TYP	TYPICAL

U

U/S	UNDERSIDE
UB	UTILITY BOX
UC	UNDERCROSSING
UD	UNDERDRAIN
UG	UNDERGROUND, UNDER GRADE
UGB	UNDERGRADE BRIDGE
UI	USER INTERFACE
UNF	UNFINISHED
UNINS	UNINSULATED
UON	UNLESS OTHERWISE NOTED
UP	UNDERPASS
UPS	UNINTERRUPTIBLE POWER SUPPLY
UR	URINAL
UrEDAS	URGENT EARTHQUAKE DETECTION AND ALARM SYSTEM
USCS	UNITED SOIL CLASSIFICATION SYSTEM
UTIL	UTILITY
UTP	UNSHIELDED TWISTED PAIR
UWP	UPPER WORKING POINT

V

V	DESIGN SPEED, VALVE
VAC	VOLTS ALTERNATING CURRENT
VAR	VARIABLE, VARIES, VOLT-AMPERE REACTIVE
VCAT	VIRTUAL CONCATENATION
VCP	VITRIFIED CLAY PIPE
VCT	VINYL COMPOSITION TILE
VDC	VOLT DC
VE	VALUE ENGINEERING
VERT	VERTICAL
VEST	VESTIBULE
VIA	VIADUCT
VLAN	VIRTUAL LOCAL AREA NETWORK
VMS	VARIABLE MESSAGE SIGN, VARIABLE MESSAGE SYSTEM,
VOL	VOLTIMETER VOLUME
VOIP	VOICE OVER INTERNET PROTOCOL
VPN	VIRTUAL PRIVATE NETWORK
VRCS	VOICE RADIO COMMUNICATIONS SYSTEM
VS	VOLTAGE SWITCH
VT	VOLTAGE TRANSFORER/TRANSDUCER

W

W	WEST, WIDTH
W/	WITH
W/O	WITHOUT
WA	WORK AREA
WB	WESTBOUND
WC	WATER CLOSET
WCS	WIRELESS COMMUNICATIONS SYSTEM
WD	WOOD
WLAN	WIRELESS LOCAL AREA NETWORK
WM	WIRE MESH
WP	WORK POINT, WOOD POLE
WPF	WATERPROOF
WPC	WAYSIDE POWER CUBICLES
WR	WIRE RUN
WRT	WITH RESPECT TO

W CONTINUED

WS	WATER SURFACE, WORK STATION
WSP	WELDED STEEL PIPE
WT	WEIGHT
WV	WATER VALVE
WW	WINGWALL, WALKWAY
WWF	WELDED WIRE FABRIC
WWLOL	WINGWALL LAYOUT LINE
WWM	WELDED WIRE MESH

X

X/CAT	CROSS CANTENARY
X/SPAN	CROSS SPAN
XD	TRANSDUCER
XFMR	TRANSFORMER
XO	CROSSOVER
XO ST	CROSSOVER SPRING TENSIONER
XSEC	CROSS SECTION
XING	CROSSING
XMITTER	TRANSMITTER

TRACK GEOMETRY - HORIZONTAL

BC	BEGIN HORIZONTAL CURVE
CC	COMPOUND CURVE
CS	POINT OF CHANGE FROM CIRCULAR CURVE TO SPIRAL
K1	TANGENT DISTANCE PF SHIFT PC REFERENCE TO THE TS
K2	TANGENT DISTANCE PF SHIFT PT REFERENCE TO THE ST
Lc	LENGTH OF CIRCULAR CURVE
Ls1	LENGTH OF SPIRAL
Ls2	LENGTH OF SPIRAL FROM TS TO SC
LSc	LENGTH OF SPIRAL FROM CS TO ST
LVC	LENGTH OF COMPOUND SPIRAL FROM CS TO SC
p1	OFFSET FROM INITIAL TANGENT TO PC OF THE SHIFTED CIRCLE OF SPIRALIZED CURVE
p2	OFFSET FROM INITIAL TANGENT TO PT OF THE SHIFTED CIRCLE OF SPIRALIZED CURVE
PC	POINT OF CURVATURE
PCC	POINT OF COMPOUND CURVE
PF	POINT OF FROG
PI	POINT OF INTERSECTION
PITO	POINT OF INTERSECTION TURNOUT
POC	POINT ON HORIZONTAL CURVE
POE	POINT OF ENDING
POS	POINT ON SPIRAL,
POVC	POINT ON VERTICAL CURVE
POVT	POINT ON VERTICAL TANGENT
PRC	POINT OF REVERSE CURVE
PRVC	POINT OF REVERSE VERTICAL CURVE
PS	POINT OF SWITCH
PT	POINT OF TANGENT
SC	POINT OF CHANGE FROM SPIRAL TO CIRCULAR CURVE
SPO	POINT ON ORIGIN OF COMPOUND SPIRAL
SS	POINT OF CHANGE BETWEEN SPIRALS
SSC	SPIRAL TO SPIRAL POINT OF CURVATURE
ST	POINT OF CHANGE FROM SPIRAL TO TANGENT
TC	POINT OF CHANGE FROM TANGENT TO CURVE
TS	POINT OF CHANGE FROM TANGENT TO SPIRAL
Ts1	TANGENT DISTANCE FROM TS TO PI
Ts2	TANGENT DISTANCE FROM ST TO PI
Xs1	TANGENT OFFSET AT THE SC
Xs2	TANGENT OFFSET AT THE CS
Ys1	TANGENT DISTANCE AT THE SC
Ys2	TANGENT DISTANCE AT THE CS
Δ	TOTAL CENTRAL ANGLE OF THE SPIRALIZED CURVE
Δc	CENTRAL ANGLE OF CIRCULAR CURVE (Lc) FROM SC TO CS
Δc1	CENTRAL ANGLE OF FIRST CIRCULAR CURVE OF COMPOUND CURVATURE
Δc2	CENTRAL ANGLE OF SECOND CIRCULAR CURVE OF COMPOUND CURVATURE
θs1	CENTRAL ANGLE OF SPIRAL LENGTH Ls1 OR SPIRAL ANGLE OF FIRST SPIRAL IN SPIRALIZED CURVE
θs2	CENTRAL ANGLE OF SPIRAL LENGTH Ls2 OR SPIRAL ANGLE OF SECOND SPIRAL IN SPIRALIZED CURVE
θsc	CENTRAL ANGLE OF COMPOUND SPIRAL OR COMPOUND SPIRAL ANGLE FROM CS TO SC

TRACK GEOMETRY - VERTICAL

BVC	BEGIN VERTICAL CURVE
Ea	ACTUAL SUPERELEVATION
EVC	END VERTICAL CURVE
PCVC	POINT OF COMPOUND VERTICAL CURVE
POVC	POINT OF VERTICAL INTERSECTION
POVT	POINT ON VERTICAL CURVE
PVI	POINT ON VERTICAL TANGENT
VC	VERTICAL CURVE
VPI	VERTICAL POINT OF INTERSECTION

UNITS OF MEASUREMENT

Ac	ACRES
AMP	AMPERES
BTU	BRITISH THERMAL UNIT
CAL	CALIPER
CF	CUBIC FEET
CP	CANDLE POWER
CY	CUBIC YARD
dB	DECIBEL
DEG	DEGREE
DIA	DIAMETER
Eu	UNBALANCED SUPERELEVATION
F	FARENHEIT
FT	FOOT, FEET
g	ACCELERATION DUE TO GRAVITY
GA	GAUGE
GAL	GALLON
GB	GIGABYTE
GBPS	GIGABITS PER SECOND
GHz	GIGAHERTZ
HR	HOUR
HT	HEIGHT
Hz	HERTZ
ID	INSIDE DIAMETER
IF	INSIDE FACE
IN	INCHES
IR	INSIDE RADIUS
K	KIPS (1000 POUNDS)
KCMIL	THOUSAND CIRCULAR MILS
KHz	KILOHERTZ
KSF	KIPS PER SQAURE FOOT
KSI	KIPS PER SQUARE INCH
kV	KILOVOLTS
KVA	KILOVOLT-AMPERE
KVAR	KILOVOLT-AMPERE REACTIVE
KW	KILOWATT
KWH/D	KILOWATT HOUR / DEMAND
L	LENGTH
LB	POUNDS
LB/FT	POUNDS PER FOOT
LF	LINEAR FEET
m	METER
MBPS	MEGA-BITS PER SECOND
MCM	THOUSAND CIRCULAR MILS
MHz	MEGAHERTZ
mm	MILLIMETER
MPH	MILES PER HOUR
MVA	MEGAVOLT-AMPERE
MW	MEGA WATT
OD	OUTSIDE DIAMETER
PSF	POUNDS PER SQUARE FOOT
PSI	POUNDS PER SQUARE INCH
PSIG	POUNDS PER SQUARE INCH GAUGE
SEC	SECOND
SF	SQUARE FEET
SY	SQUARE YARD
TF	TRACK FEET
VA	VOLTS
VAC	VOLT-AMPERE
Y	YARDS
YR(S)	YEAR(S)

RFP No. HSR 14-32 – INITIAL RELEASE - 05/27/2015

REV	DATE	BY	CHK	APP	DESCRIPTION

DESIGNED BY R. MINCIO
DRAWN BY V. HUANTE
CHECKED BY S. MILITELLO
IN CHARGE J. CHIRCO
DATE 01/24/2014

PARSONS BRINCKERHOFF

CALIFORNIA HIGH-SPEED RAIL AUTHORITY

CALIFORNIA HIGH-SPEED TRAIN PROJECT
DIRECTIVE DRAWING

ACRONYMS AND ABBREVIATIONS 4

CONTRACT NO.
DRAWING NO. DD-GE-103
SCALE NO SCALE
SHEET NO.

2/11/2014 5:15:13 PM c:\projectwise\pb\projectwiseint\mincio\dms32160\DD-GE-103.dgn CAHSRP.tbl CHSR_half_black.plt mincio

AGENCIES/ORGANIZATIONS/REFERENCE

AAR	ASSOCIATION OF AMERICAN RAILROADS
AASHTO	AMERICAN ASSOCIATION OF STATE HIGHWAY TRANSPORTATION OFFICIALS
ACI	AMERICAN CONCRETE INSTITUTE
AISC	AMERICAN INSTITUTE OF STEEL CONSTRUCTION
AMTRAK	NATIONAL RAILROAD PASSENGER CORPORATION
ANSI	AMERICAN NATIONAL STANDARDS INSTITUTE
ANSS	ADVANCED NATIONAL SEISMIC SYSTEM
APWA	AMERICAN PUBLIC WORKS ASSOCIATION
AREA	AMERICAN RAILWAY ENGINEERING ASSOCIATION
AREMA	AMERICAN RAILWAY ENGINEERING AND MAINTENANCE-OF-WAY ASSOCIATION
ASCE	AMERICAN SOCIETY OF CIVIL ENGINEERS
ASTM	ASTM INTERNATIONAL, AMERICAN SOCIETY OF TESTING & MATERIALS
ATC	APPLIED TECHNOLOGY COUNCIL
AWS	AMERICAN WELDING SOCIETY
BART	BAY AREA RAPID TRANSIT DISTRICT
BDA	BRIDGE DESIGN AIDS (CALTRANS)
BDD	BRIDGE DESIGN DETAILS (CALTRANS)
BDP	BRIDGE DESIGN PRACTICE (CALTRANS)
BDS	BRIDGE DESIGN SPECIFICATIONS (CALTRANS)
BNSF	BURLINGTON NORTHERN SANTA FE RAILWAY
CALNET	CALIFORNIA INTEGRATED TELECOMMUNICATIONS NETWORK
CALTRANS	CALIFORNIA DEPARTMENT OF TRANSPORTATION
CBC	CALIFORNIA BUILDING CODE
CBDM	CALIFORNIA DEPARTMENT OF TRANSPORTATION - BRIDGE DESIGN MANUAL
CCR	CALIFORNIA CODE OF REGULATIONS
CDC	CALIFORNIA HIGH-SPEED TRAIN DESIGN CRITERIA
CEC	CALIFORNIA ELECTRIC CODE
CEQA	CALIFORNIA ENVIRONMENTAL QUALITY ACT
CFR	CODE OF FEDERAL REGULATIONS
CHD	COUNTY HEALTH DEPARTMENT
CHP	CALIFORNIA DEPARTMENT OF HIGHWAY PATROL (STATE)
CHST	CALIFORNIA HIGH-SPEED TRAIN
CHSTP	CALIFORNIA HIGH-SPEED TRAIN PROJECT
CIWMB	CALIFORNIA INTEGRATED WASTE MANAGEMENT BOARD (STATE)
CPH	CALIFORNIA PERMIT HANDBOOK
CPUC	CALIFORNIA PUBLIC UTILITIES COMMISSION
CRR	COMMUTER RAIL PROGRAM (STATE)
DOD	DEPARTMENT OF DEFENSE (FEDERAL)
DOT	DEPARTMENT OF TRANSPORTATION (FEDERAL)
DTX	DOWNTOWN EXTENSION (CALTRAIN)
EIRENE	EUROPEAN INTEGRATED RADIO ENHANCED NETWORK
ERTMS	EUROPEAN RAIL TRAFFIC MANAGEMENT SYSTEM
FAA	FEDERAL AVIATION ADMINISTRATION
FCC	FEDERAL COMMUNICATIONS COMMISSION
FEMA	FEDERAL EMERGENCY MANAGEMENT AGENCY
FHWA	FEDERAL HIGHWAY ADMINISTRATION
FMFCD	FRESNO METROPOLITAN FLOOD CONTROL DISTRICT
FRA	FEDERAL RAILROAD ADMINISTRATION
FSTIP	FEDERAL STATEWIDE TRANSPORTATION IMPROVEMENT PROGRAM
FTA	FEDERAL TRANSIT ADMINISTRATION
GBR	GEOTECHNICAL BASELINE REPORT
GBR-B	GEOTECHNICAL BASELINE REPORT FOR BIDDING
GBR-C	GEOTECHNICAL BASELINE REPORT FOR CONSTRUCTION
GDR	GEOTECHNICAL DATA REPORT
IEEE	INSTITUTE OF ELECTRICAL AND ELECTRONICS ENGINEERS
ISO	INTERNATIONAL ORGANIZATION FOR STANDARDIZATION
LADWP	LOS ANGELES DEPARTMENT OF WATER AND POWER
LAUS	LOS ANGELES UNION STATION
LTC	LOCAL TRANSPORTATION COMMISSION
MUTCD	MANUAL OF UNIFORM TRAFFIC CONTROL DEVICES
NAAQS	NATIONAL AMBIENT AIR QUALITY STANDARDS
NAC	NOISE ABATEMENT CRITERIA
NBSSR	NOISE BARRIER SCOPE SUMMARY REPORT
NEMA	NATIONAL ELECTRICAL MANUFACTURERS ASSOCIATION
NENA	NATIONAL EMERGENCY NUMBER ASSOCIATION
NESC	NATIONAL ELECTRICAL SAFETY CODE
NFPA	NATIONAL FIRE PROTECTION ASSOCIATION
NIST	NATIONAL INSTITUTE OF STANDARDS AND TECHNOLOGY
OSHA	OCCUPATIONAL SAFETY AND HEALTH ADMINISTRATION
PEER	PACIFIC EARTHQUAKE ENGINEER RESEARCH

AGENCIES/ORGANIZATIONS/REFERENCE CONTINUED

PG&E	PACIFIC GAS & ELECTRIC COMPANY
PUC	PUBLIC UTILITIES COMMISSION (STATE)
RSIA	RAIL SAFETY IMPROVEMENT ACT (2008)
RWQCB	REGIONAL WATER QUALITY CONTROL BOARD (STATE)
SDG&E	SAN DIEGO GAS & ELECTRIC COMPANY
SDNR	SAN DIEGO NORTHERN RAILWAY
SAVE	SOCIETY OF AMERICAN VALUE ENGINEERS
SHOPP	STATE HIGHWAY OPERATION AND PROTECTION PROGRAM (FORMERLY HSOPP)
SHPO	STATE HISTORIC PRESERVATION OFFICER (STATE)
SJRRA	SAN JOAQUIN REGIONAL RAIL AUTHORITY
SMUD	SACRAMENTO MUNICIPAL UTILITY DISTRICT
SPTC	SOUTHERN PACIFIC TRANSPORTATION COMPANY
SSORC	SAFETY AND SECURITY OVERSIGHT AND REVIEW COMMITTEE
SVBX	SILICON VALLEY BERRYESSA EXTENSION
SVRT	SILICON VALLEY RAPID TRANSIT
UPRR	UNION PACIFIC RAILROAD
US	UNITED STATES
USCE	UNITED STATES (ARMY) CORPS OF ENGINEERS
USCG	UNITED STATES COAST GUARD
USCS	UNITED SOIL CLASSIFICATION SYSTEM
VTA	VALLEY TRANSPORTATION AUTHORITY (OF SANTA CLARA COUNTY)

SEGMENT/COUNTY CODES AND SUBDIVISIONS

A-J	ALTAMONT PASS
B-P	BAKERSFIELD TO PALMDALE
F-B	FRESNO TO BAKERSFIELD
F-J	SAN FRANCISCO TO SAN JOSE
J-M	SAN JOSE TO MERCED
L-D	LOS ANGELES TO SAN DIEGO
L-O	LOS ANGELES TO ANAHEIM
M-F	MERCED TO FRESNO
P-L	PALMDALE TO LOS ANGELES
S-M	SACRAMENTO TO MERCED
B	BAY SUBDIVISION
C	CAPITAL SUBDIVISION
D	DESERT SUBDIVISION
J	SAN JACINTO SUBDIVISION
P	PACHECO SUBDIVISION
S	SIERRA SUBDIVISION
T	TONGVA SUBDIVISION
ALA	ALAMEDA
ALP	ALPINE
AMA	AMADOR
BUT	BUTTE
CAL	CALAVERAS
CC	CONTRA COSTA
COL	COLUSA
DN	DEL NORTE
ED	EL DORADO
FRE	FRESNO
GLE	GLENN
HUM	HUMBOLDT
IMP	IMPERIAL
INY	INYO
KER	KERN
KIN	KINGS
LA	LOS ANGELES
LAK	LAKE
LAS	LASSEN
MAD	MADERA
MEN	MENDOCINO
MER	MERCED
MNO	MONO
MOD	MODOC
MON	MONTEREY
MPA	MARIPOSA
MRN	MARIN
NAP	NAPA
NEV	NEVADA
ORA	ORANGE
PLA	PLACER
PLU	PLUMAS
RIV	RIVERSIDE
SAC	SACRAMENTO
SB	SANTA BARBARA
SBD	SAN BERNADINO
SBT	SAN BENITO
SCL	SANTA CLARA
SCR	SANTA CRUZ
SD	SAN DIEGO
SF	SAN FRANCISCO
SHA	SHASTA
SIE	SIERRA
SIS	SISKIYOU
SJ	SAN JOAQUIN
SLO	SAN LUIS OBISPO
SM	SAN MATEO
SOL	SOLANO
SON	SONOMA
STA	STANISLAUS
SUT	SUTTER
TEH	TEHAMA
TRI	TRINITY
TUL	TULARE
TUO	TUOLUMNE
VEN	VENTURA
YOL	YOLO
YUB	YUBA

RFP No. HSR 14-32 – INITIAL RELEASE - 05/27/2015

REV	DATE	BY	CHK	APP	DESCRIPTION

DESIGNED BY R. MINCIO
DRAWN BY V. HUANTE
CHECKED BY S. MILITELLO
IN CHARGE J. CHIRCO
DATE 01/24/2014

PARSONS BRINCKERHOFF

CALIFORNIA HIGH-SPEED RAIL AUTHORITY

CALIFORNIA HIGH-SPEED TRAIN PROJECT
DIRECTIVE DRAWING

ACRONYMS AND ABBREVIATIONS 5

CONTRACT NO.
DRAWING NO. DD-GE-104
SCALE NO SCALE
SHEET NO.

mincio 2/11/2014 5:16:45 PM CAHSRP.tbl CHSR_half_black.plt c:\projectwise\pb\projectwiseint\mincio\dms32160\DD-GE-104.dgn

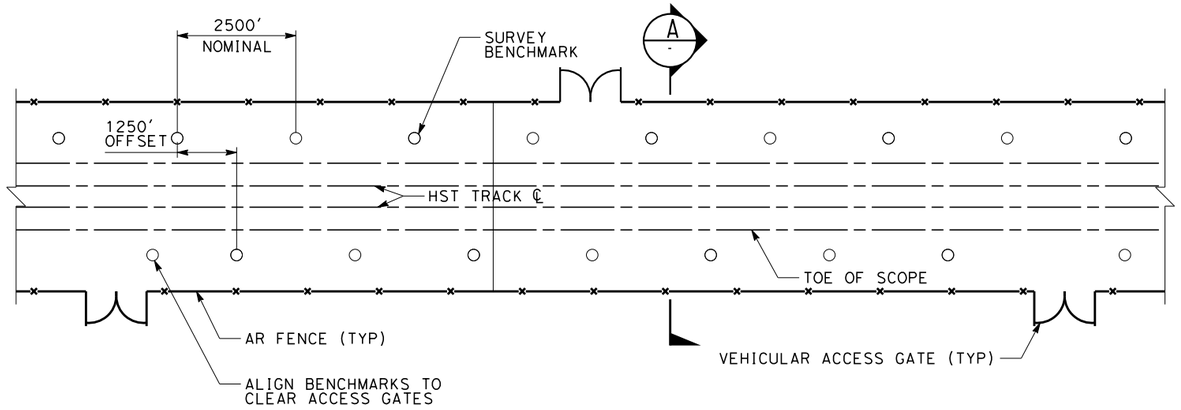

SURVEY BENCHMARK LOCATION ALONG HST TRACKWAY

EMBANKMENT

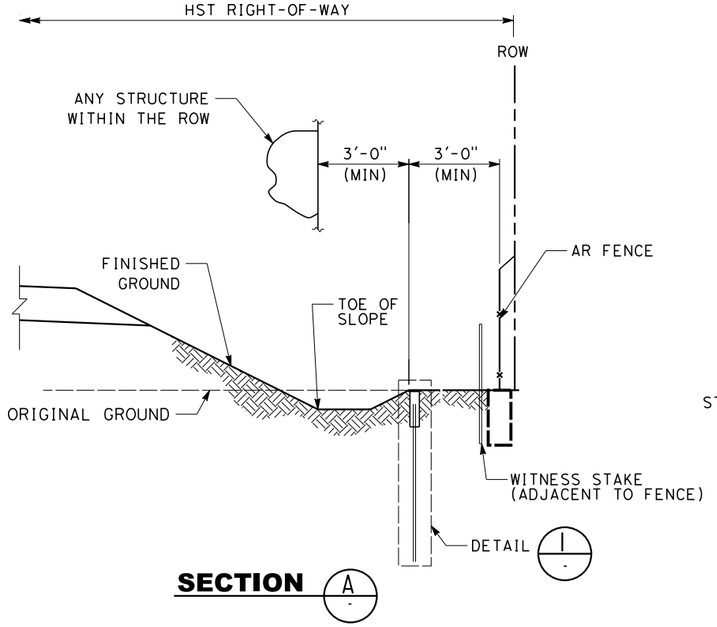

SECTION A -

SURVEY BENCHMARK

EMBANKMENT

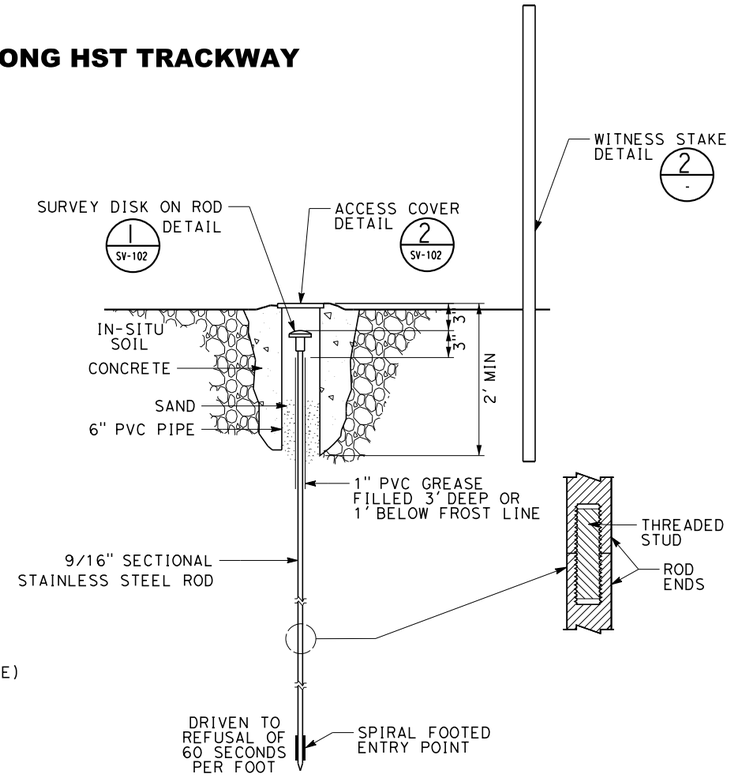

DETAIL 1 -

TYPE B SURVEY BENCHMARK DEEP ROD

NOTES:

1. THIS DRAWING DEPICTS THE REQUIREMENTS OF PLACING SURVEY BENCHMARKS WITHIN THE AUTHORITIES ROW DUE TO THE POSSIBLE PRESENCE OF GROUND SUBSIDENCE. BENCHMARKS TO BE PLACED ON EACH SIDE OF THE EMBANKMENT APPROXIMATELY 2500' WITH 1250' OFFSET ON EACH SIDE OF THE EMBANKMENT.
2. FOR ADDITIONAL INFORMATION ON BENCHMARK INSTALLATION REFER TO SURVEY MARKERS AND DOCUMENTATION, US ARMY CORPS OF ENGINEERS, EM 1110-1-1002,TYPE B MONUMENT-DEEP ROD.
3. PROIVDE A GPS BASED SURVEY FOR MONITORING SURVEY BENCHMARKS.
4. EASTABLISH NON-MOVING BENCHMARK CONTROL POINT, SPME OF WHICH WILL BE LOCATED OUTSIDE OF ROW.
5. SUBMIT AS-BUILTS OF THE MONUMENTS GIVING EXACT COORDINATE LOCATIONS, NUMBERING, INSTALLATION DATES, LENGTH OF RODS INSTALLED, AND OTHER PERTAINENT DATA.
6. INSTALL SURVEY BENCHMARKS AND OBTAIN BASELINE READINGS AGREED BY THE AUTHORITY AT LEAST 90 CALENDAR DAYS BEFORE THE START OF ANY CONSTRUCTION.
7. PROVIDE A WEB-BASED USER INTERFACE THAT CAN BE RUN FROM ANY WEB BROSWER TO ALLOW A COMPLETE REVIEW OF THE SURVEY DATA IN GRAPHICAL FORMAT. TABULATED DATA SHALL BE PRESENTED AS SHOWN ON DETAIL 3 ON DIRECTIVE DRAWINGS TITLED "SURVEY BENCHMARK DETAILS."
8. DO NOT DISCLOSE ANY SURVEY DATA TO ANY THIRD PARTIES OTHERN THAN THE AUTHORITY OR OTHER APPROVED THIRD PARTIEES AND DO NOT PUBLISH DATA FOR OTHER THAN PROJECT USE WITHOUT PRIOR WRITTEN CONSENT OF THE AUTHORITY. SEE DIRECTIVE DRAWING TITLED "SURVEY BENCHMARK" FOR CONTROL POINT TABLE REQUIREMENTS.

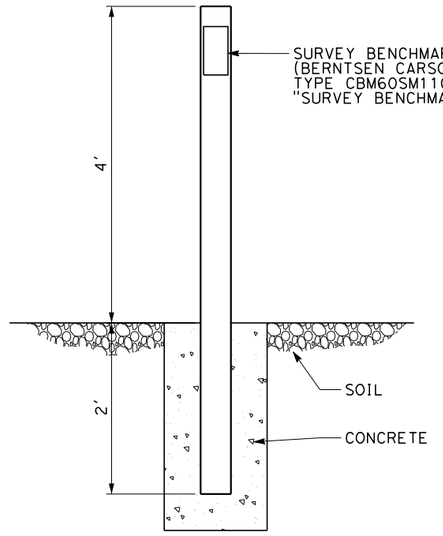

DETAIL 2 -

WITNESS STAKE

RFP No. HSR 14-32 – INITIAL RELEASE - 05/27/2015

REV	DATE	BY	CHK	APP	DESCRIPTION

DESIGNED BY: B. VALENTI
DRAWN BY: V. LAVERDE
CHECKED BY: T. LEE
IN CHARGE: J. ELLIOT
DATE: 04/20/2015

PARSONS BRINCKERHOFF

CALIFORNIA HIGH-SPEED RAIL AUTHORITY

CALIFORNIA HIGH-SPEED TRAIN PROJECT
SURVEY DIRECTIVE

SURVEY BENCHMARK

CONTRACT NO.
DRAWING NO. DD-SV-101
SCALE NO SCALE
SHEET NO.

4/20/2015 1:17:52 PM CAHSRP.tbl CHSR_PDF_half_black.plt c:\projectwise\pb\projectwiseint\mincio\dms93184\DD-SV-101.dgn Mincio

SURVEY DATA

POINT NAME	LATITUDE	LONGITUDE	NORTHING	EASTING	GRID FACTOR	COMBINED FACTOR	CONERERGENCE	POINT ELEVATION	DESCRIPTION

COMPARSION DATA

SURVEY DATA FROM YYYY/MM/DD*				DELTA		
POINT NAME	POINT ELEVATION	NORTHING	EASTING	ELEV	X SHIFT	Y SHIFT

•SURVEY DATA SHALL BE COMPILED EVERY SIX MONTHS

XXXX INDICATES POINT DESIGNATION (NAME)
YYYY LAND SURVEYOR NUMBER
20XX INDICATES YEAR

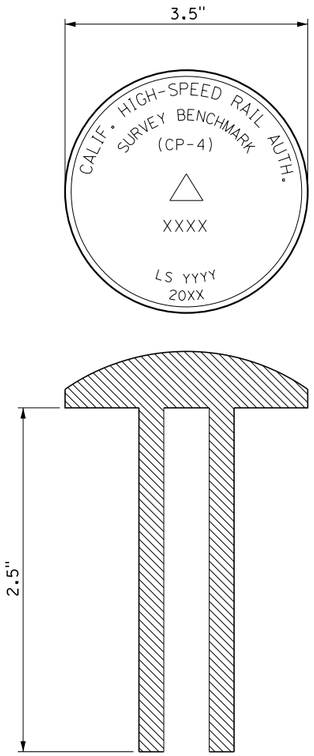

DETAIL 1 / SV-101

SURVEY DISK ON ROD

DETAIL 3

SAMPLE BENCHMARK SURVEY DATA TABLE

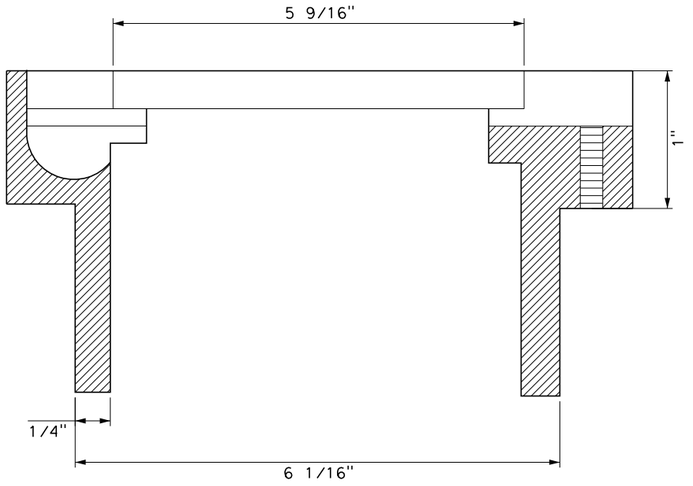

SECTION A-A

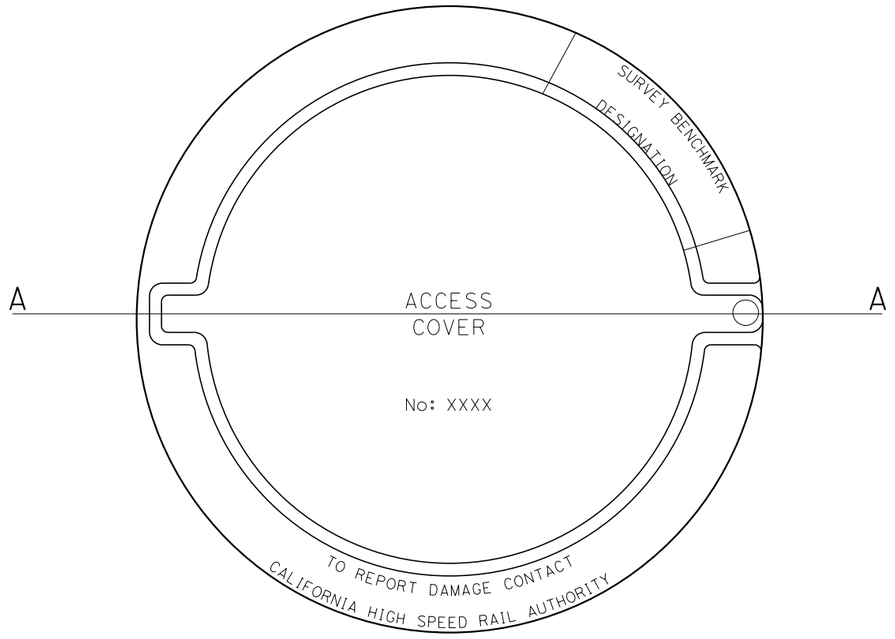

DETAIL 2 / SV-101

ACCESS COVER

NOTES:

1. THIS DRAWING DEPICTS THE REQUIREMENTS OF PLACING SURVEY BENCHMARKS WITHIN THE AUTHORITIES ROW DUE TO THE POSSIBLE PRESENCE OF GROUND SUBSIDENCE.
2. FOR ADDITIONAL INFORMATION ON BENCHMARK INSTALLATION REFER TO SURVEY MARKERS AND DOCUMENTATION, US ARMY CORPS OF ENGINEERS, EM 1110-1-1002,TYPE B MONUMENT-DEEP ROD.

RFP No. HSR 14-32 – INITIAL RELEASE - 05/27/2015

REV	DATE	BY	CHK	APP	DESCRIPTION

DESIGNED BY B. VALENTI
DRAWN BY V. LAVERDE
CHECKED BY T. LEE
IN CHARGE J. ELLIOT
DATE 04/20/2015

PARSONS BRINCKERHOFF

CALIFORNIA HIGH-SPEED RAIL AUTHORITY

CALIFORNIA HIGH-SPEED TRAIN PROJECT
SURVEY DIRECTIVE

SURVEY BENCHMARK DETAILS

CONTRACT NO.
DRAWING NO. DD-SV-102
SCALE NO SCALE
SHEET NO.

Minicio 4/20/2015 2:40:41 PM CAHSRP.tbl CHSR_PDF_half_black.plt c:\projectwise\pb\projectwiseint\minicio\dms93184\DD-SV-102.dgn

NOTES:

1. TRACK, SYSTEMS AND DRAINAGE ARE SCHEMATIC AND DO NOT REPRESENT DESIGN.
2. SUBGRADE THICKNESS SHALL BE DETERMINED BASED ON THE EXISTING GROUND CONDITION.
3. THE CONTROL POINT (CP) SHALL BE 2'-6" ABOVE THE TOP OF SUBBALLAST.
4. FOR EMBANKMENT SLOPE GRADING, S=2 (MIN).
5. PROTECTIVE BARRIER, SUCH AS A BERM OR A DIKE, SHALL BE INSTALLED AT THE RIGHT-OF-WAY BOUNDARY TO INTERCEPT STORM WATER RUN OFF, WHERE THERE IS A POTENTIAL FOR STORM WATER RUN OFF TO ENTER CHST RIGHT-OF-WAY FROM ADJACENT PROPERTY.

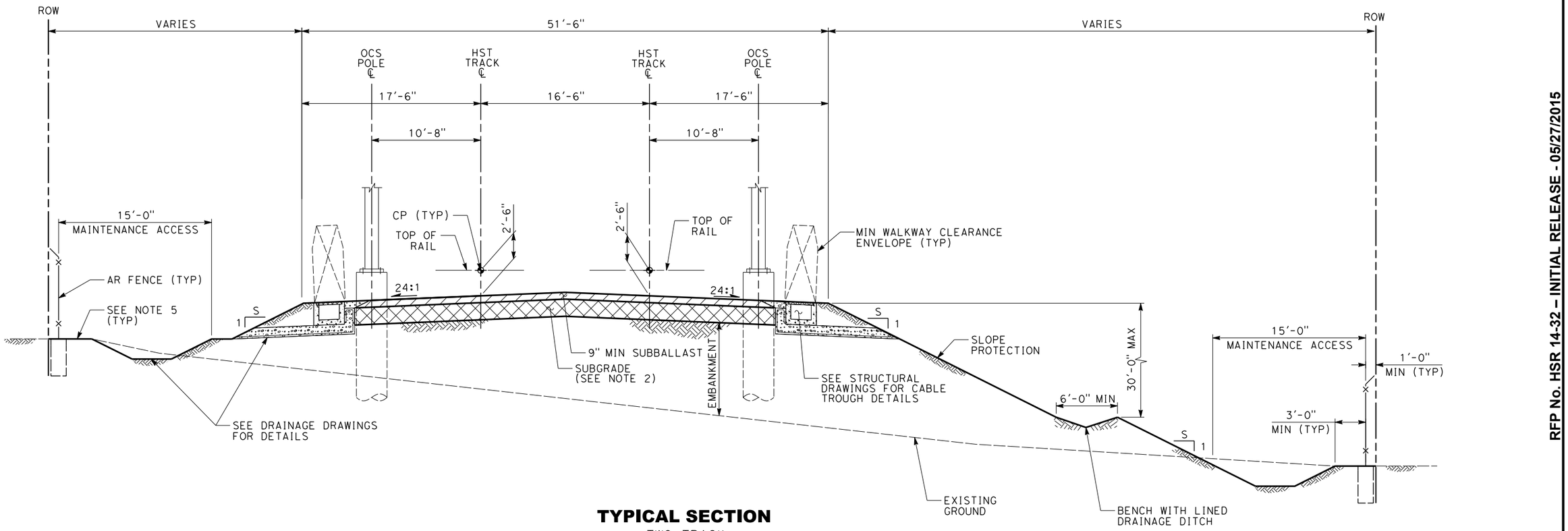

TYPICAL SECTION
TWO TRACK
EMBANKMENT

5 0 5 10
1"=5'

REV	DATE	BY	CHK	APP	DESCRIPTION

DESIGNED BY D. MANITI
DRAWN BY V. HUANTE
CHECKED BY G. HARRIS
IN CHARGE G. LUSHEROVICH
DATE 01/24/2014

PARSONS BRINCKERHOFF

CALIFORNIA HIGH-SPEED RAIL AUTHORITY

CALIFORNIA HIGH-SPEED TRAIN PROJECT
CIVIL DIRECTIVE

TYPICAL CROSS SECTION
TWO TRACK
EMBANKMENT

CONTRACT NO.
DRAWING NO. DD-CV-100
SCALE AS SHOWN
SHEET NO.

RFP No. HSR 14-32 – INITIAL RELEASE - 05/27/2015

mincio 3/28/2014 3:21:43 PM CAHSRP.tbl CHSR_half_black.plt c:\projectwise\pb\projectwise\int\mincio\dms32166\DD-CV-100.dgn

NOTES:

1. TRACK, SYSTEMS AND DRAINAGE ARE SCHEMATIC AND DO NOT REPRESENT DESIGN.
2. SUBGRADE THICKNESS SHALL BE DETERMINED BASED ON THE EXISTING GROUND CONDITION.
3. THE CONTROL POINT (CP) SHALL BE 2'-6" ABOVE THE TOP OF SUBBALLAST.
4. FOR EMBANKMENT SLOPE GRADING, S=2 (MIN).
5. PROTECTIVE BARRIER, SUCH AS A BERM OR A DIKE, SHALL BE INSTALLED AT THE RIGHT-OF-WAY BOUNDARY TO INTERCEPT STORM WATER RUN OFF, WHERE THERE IS A POTENTIAL FOR STORM WATER RUN OFF TO ENTER CHST RIGHT-OF-WAY FROM ADJACENT PROPERTY.
6. A 20-FOOT MAINTENANCE ACCESS IS REQUIRED FOR CUT SLOPES HIGHER THAN 30 FEET.

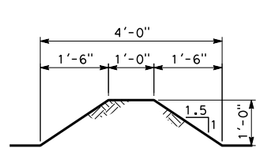

BERM

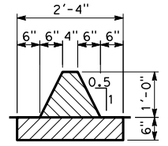

AC DIKE

PROTECTIVE BARRIER DETAILS
(SEE NOTE 5)

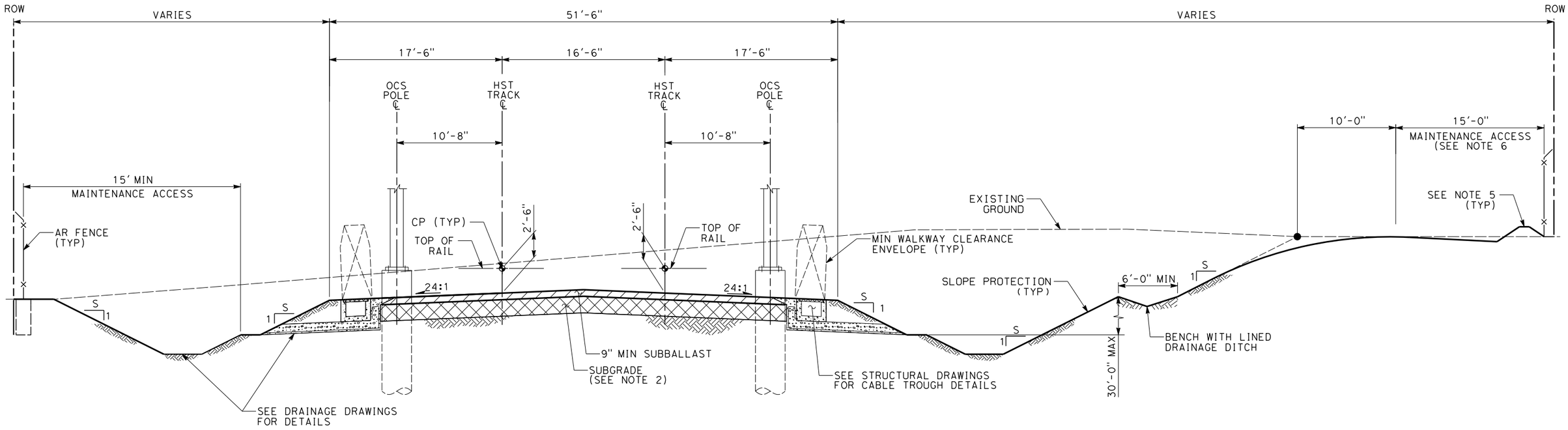

TYPICAL SECTION
TWO TRACK
OPEN CUT

5 0 5 10
1"=5'

RFP No. HSR 14-32 – INITIAL RELEASE - 05/27/2015

REV	DATE	BY	CHK	APP	DESCRIPTION

DESIGNED BY D. MANITI
DRAWN BY R. MINCIO
CHECKED BY G. HARRIS
IN CHARGE G. LUSHEROVICH
DATE 01/24/2014

PARSONS BRINCKERHOFF

CALIFORNIA HIGH-SPEED RAIL AUTHORITY

CALIFORNIA HIGH-SPEED TRAIN PROJECT
CIVIL DIRECTIVE

TYPICAL CROSS SECTION
TWO TRACK
OPEN CUT

CONTRACT NO.
DRAWING NO. DD-CV-101
SCALE AS SHOWN
SHEET NO.

3/28/2014 4:41:30 PM CAHSRP.tbl CHSR_half_black.plt c:\projectwise\pb\projectwiseint\mincio\dms32166\DD-CV-101.dgn mincio

9/30/2014 12:28:14 PM CAHSRP.tbl CHSR_PDF_half_black.plt c:\projectwise\pb\projectwise\pb\dms32166\DD-CV-102.dgn Mincio

NOTES:

1. TRACK, SYSTEMS AND DRAINAGE ARE SCHEMATIC AND DO NOT REPRESENT DESIGN.
2. SUBGRADE THICKNESS SHALL BE DETERMINED BASED ON THE EXISTING GROUND CONDITION.
3. THE CONTROL POINT (CP) SHALL BE 2'-6" ABOVE THE TOP OF SUBBALLAST.
4. PROTECTIVE BARRIER, SUCH AS A BERM OR A DIKE, SHALL BE INSTALLED AT THE RIGHT-OF-WAY BOUNDARY TO INTERCEPT STORM WATER RUN OFF, WHERE THERE IS A POTENTIAL FOR STORM WATER RUN OFF TO ENTER CHST RIGHT-OF-WAY FROM ADJACENT PROPERTY.
5. 10' MIN MAINTENANCE ACCESS REQUIRED WHEN THERE IS NO FENCE OR CONTINUOUS OBSTRUCTION.
6. PROVIDE APPROPRIATE DRAINAGE SYSTEM FOR THE TYPE OF RETAINING WALL.

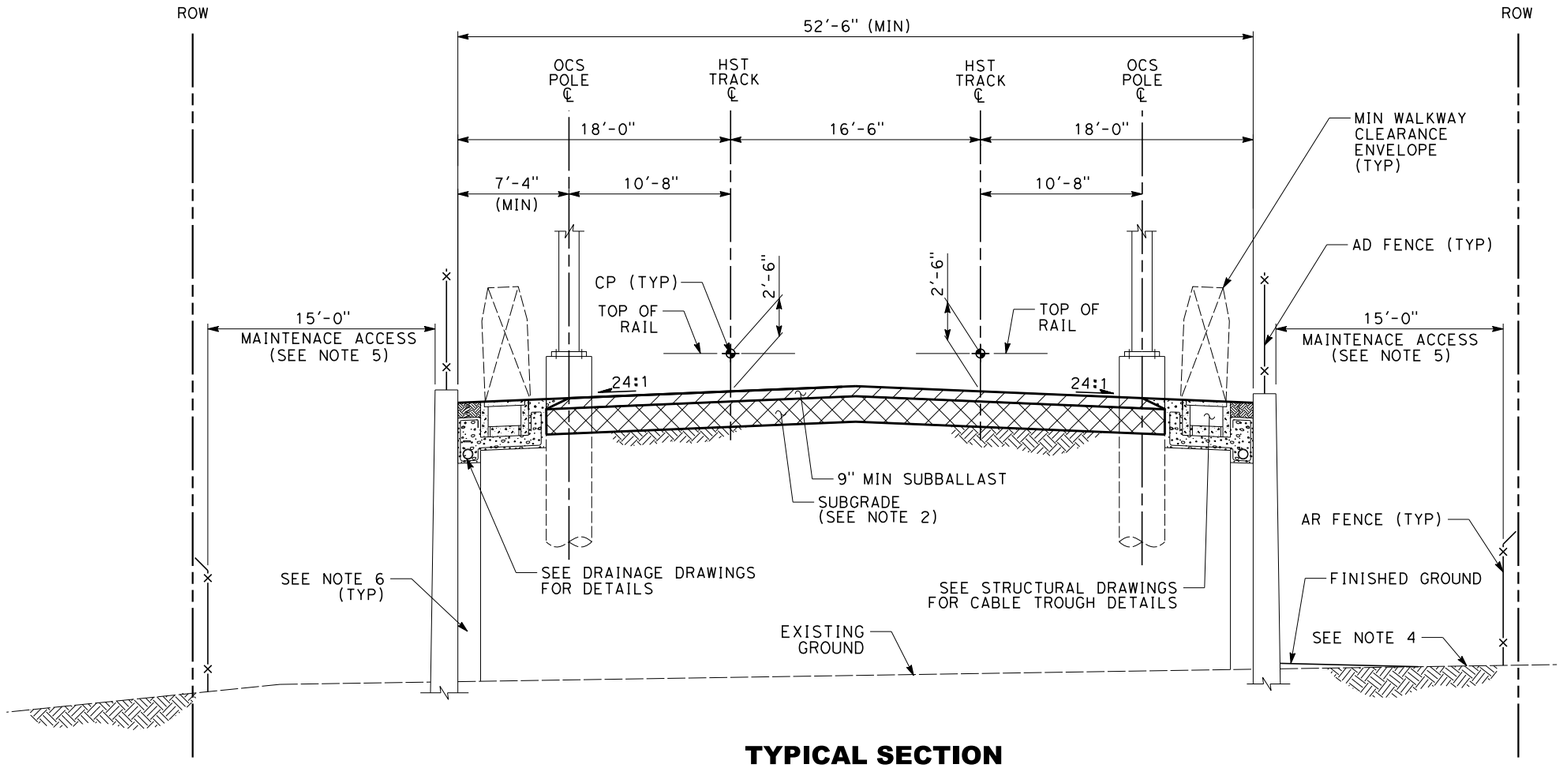

TYPICAL SECTION

TWO TRACK
RETAINED FILL

5 0 5 10
1"=5'

RFP No. HSR 14-32 – INITIAL RELEASE - 05/27/2015

REV	DATE	BY	CHK	APP	DESCRIPTION

DESIGNED BY S. MILITELLO
DRAWN BY R. MINCIO
CHECKED BY G. HARRIS
IN CHARGE G. LUSHEROVICH
DATE 08/29/2014

PARSONS BRINCKERHOFF

CALIFORNIA HIGH-SPEED RAIL AUTHORITY

CALIFORNIA HIGH-SPEED TRAIN PROJECT
CIVIL DIRECTIVE

TYPICAL CROSS SECTION
TWO TRACK
RETAINED FILL

CONTRACT NO.
DRAWING NO. DD-CV-102
SCALE AS SHOWN
SHEET NO.

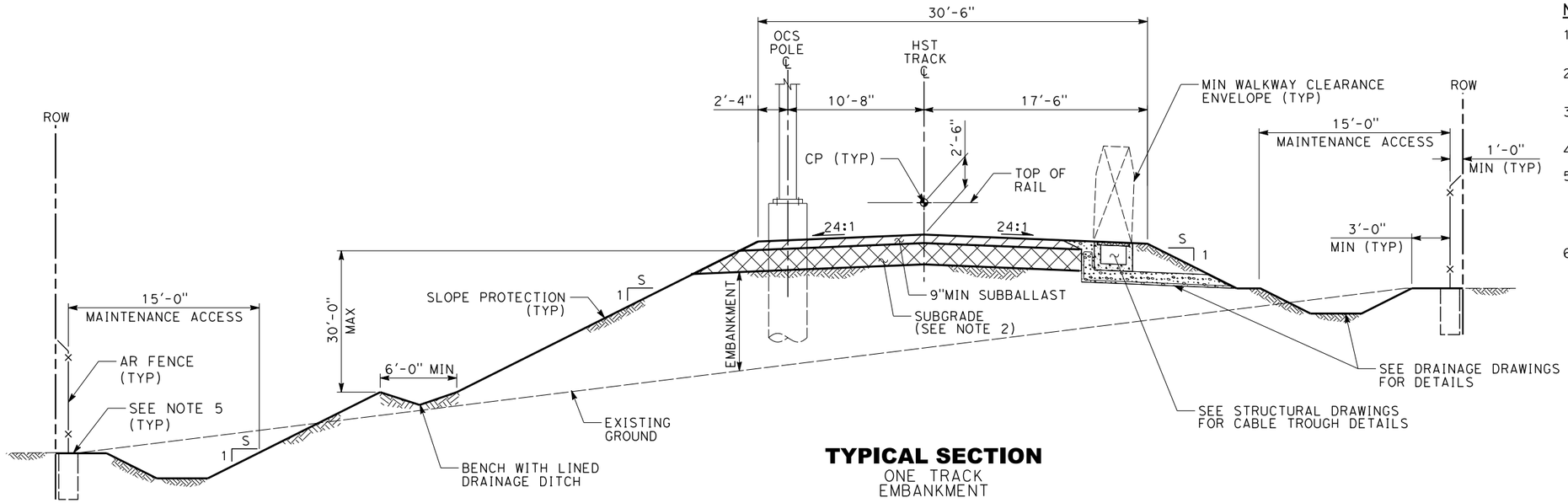

TYPICAL SECTION
ONE TRACK
EMBANKMENT

NOTES:

1. TRACK, SYSTEMS AND DRAINAGE ARE SCHEMATIC AND DO NOT REPRESENT DESIGN.
2. SUBGRADE THICKNESS SHALL BE DETERMINED BASED ON THE EXISTING GROUND CONDITION.
3. THE CONTROL POINT (CP) SHALL BE 2'-6" ABOVE THE TOP OF SUBBALLAST.
4. FOR EMBANKMENT SLOPE GRADING, S=2 (MIN).
5. PROTECTIVE BARRIER, SUCH AS A BERM OR A DIKE, SHALL BE INSTALLED AT THE RIGHT-OF-WAY BOUNDARY TO INTERCEPT STORM WATER RUN OFF, WHERE THERE IS A POTENTIAL FOR STORM WATER RUN OFF TO ENTER CHST RIGHT-OF-WAY FROM ADJACENT PROPERTY.
6. A 20-FOOT MAINTENANCE ACCESS IS REQUIRED FOR CUT SLOPES HIGHER THAN 30 FEET.

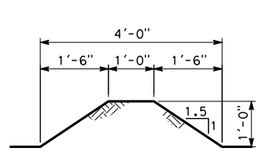

BERM

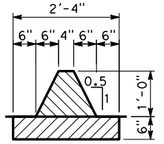

AC DIKE

PROTECTIVE BARRIER DETAILS
(SEE NOTE 5)

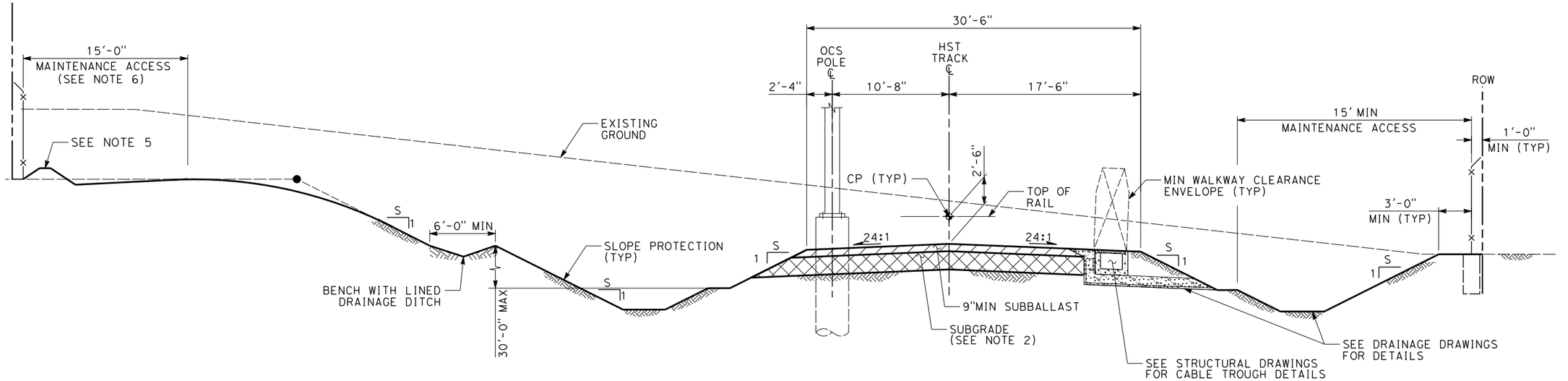

TYPICAL SECTION
ONE TRACK
OPEN CUT

5 0 5 10
1"=5'

RFP No. HSR 14-32 – INITIAL RELEASE - 05/27/2015

REV	DATE	BY	CHK	APP	DESCRIPTION

DESIGNED BY D. MANITI
DRAWN BY R. MINCIO
CHECKED BY G. HARRIS
IN CHARGE G. LUSHEROVICH
DATE 01/24/2014

PARSONS BRINCKERHOFF

CALIFORNIA HIGH-SPEED RAIL AUTHORITY

CALIFORNIA HIGH-SPEED TRAIN PROJECT
CIVIL DIRECTIVE

TYPICAL CROSS SECTION
ONE TRACK
EMBANKMENT AND OPEN CUT

CONTRACT NO.
DRAWING NO. DD-CV-103
SCALE AS SHOWN
SHEET NO.

mincio 3/28/2014 4:43:17 PM CAHSRP.tbl CHSR_half_black.plt c:\projectwise\pb\projectwise\int\mincio\dms32166\DD-CV-103.dgn

NOTES:

1. TRACK, SYSTEMS AND DRAINAGE ARE SCHEMATIC AND DO NOT REPRESENT DESIGN.
2. SUBGRADE THICKNESS SHALL BE DETERMINED BASED ON THE EXISTING GROUND CONDITION.
3. THE CONTROL POINT (CP) SHALL BE 2'-6" ABOVE THE TOP OF SUBBALLAST.
4. FOR EMBANKMENT SLOPE GRADING, S=2 (MIN).
5. PROTECTIVE BARRIER, SUCH AS A BERM OR A DIKE, SHALL BE INSTALLED AT THE RIGHT-OF-WAY BOUNDARY TO INTERCEPT STORM WATER RUN OFF, WHERE THERE IS A POTENTIAL FOR STORM WATER RUN OFF TO ENTER CHST RIGHT-OF-WAY FROM ADJACENT PROPERTY.

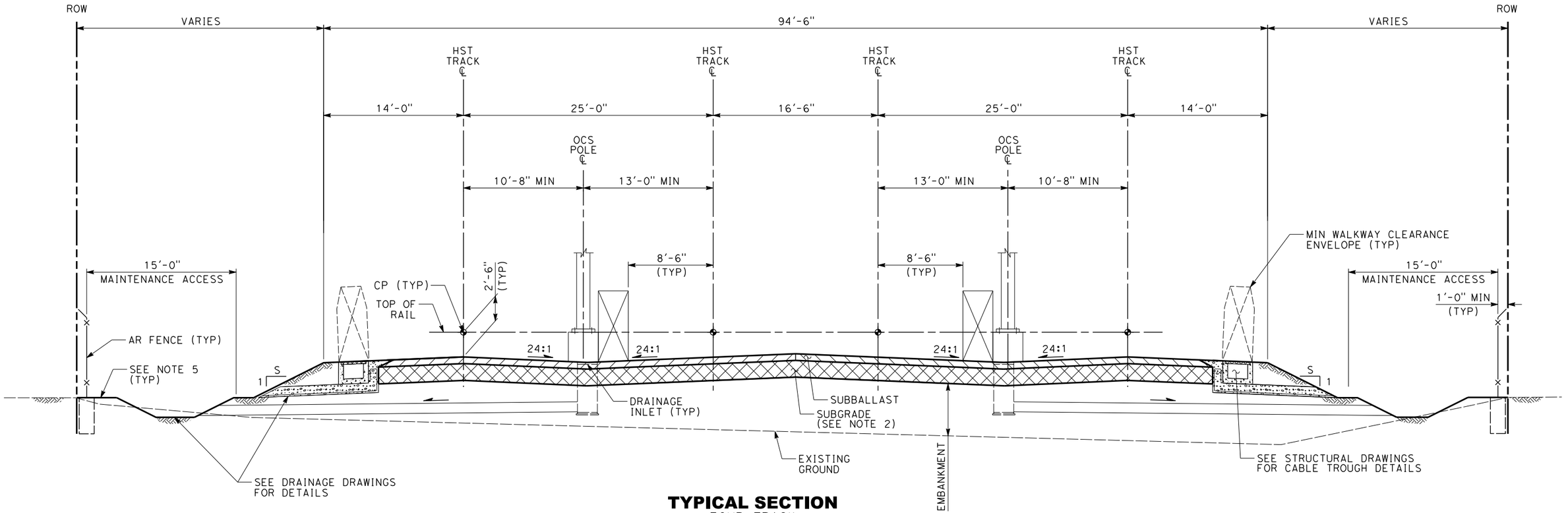

TYPICAL SECTION
FOUR TRACK
EMBANKMENT

5 0 5 10
1"=5'

REV	DATE	BY	CHK	APP	DESCRIPTION

DESIGNED BY D. MANITI
DRAWN BY R. MINCIO
CHECKED BY G. HARRIS
IN CHARGE G. LUSHEROVICH
DATE 01/24/2014

PARSONS BRINCKERHOFF

CALIFORNIA HIGH-SPEED RAIL AUTHORITY

CALIFORNIA HIGH-SPEED TRAIN PROJECT
CIVIL DIRECTIVE

TYPICAL CROSS SECTION
FOUR TRACK
EMBANKMENT

CONTRACT NO.
DRAWING NO. DD-CV-104
SCALE AS SHOWN
SHEET NO.

RFP No. HSR 14-32 – INITIAL RELEASE - 05/27/2015

mincio 3/28/2014 3:32:46 PM CAHSRP.tbl CHSR_half_black.plt c:\projectwise\pb\projectwiseint\mincio\dms32166\DD-CV-104.dgn

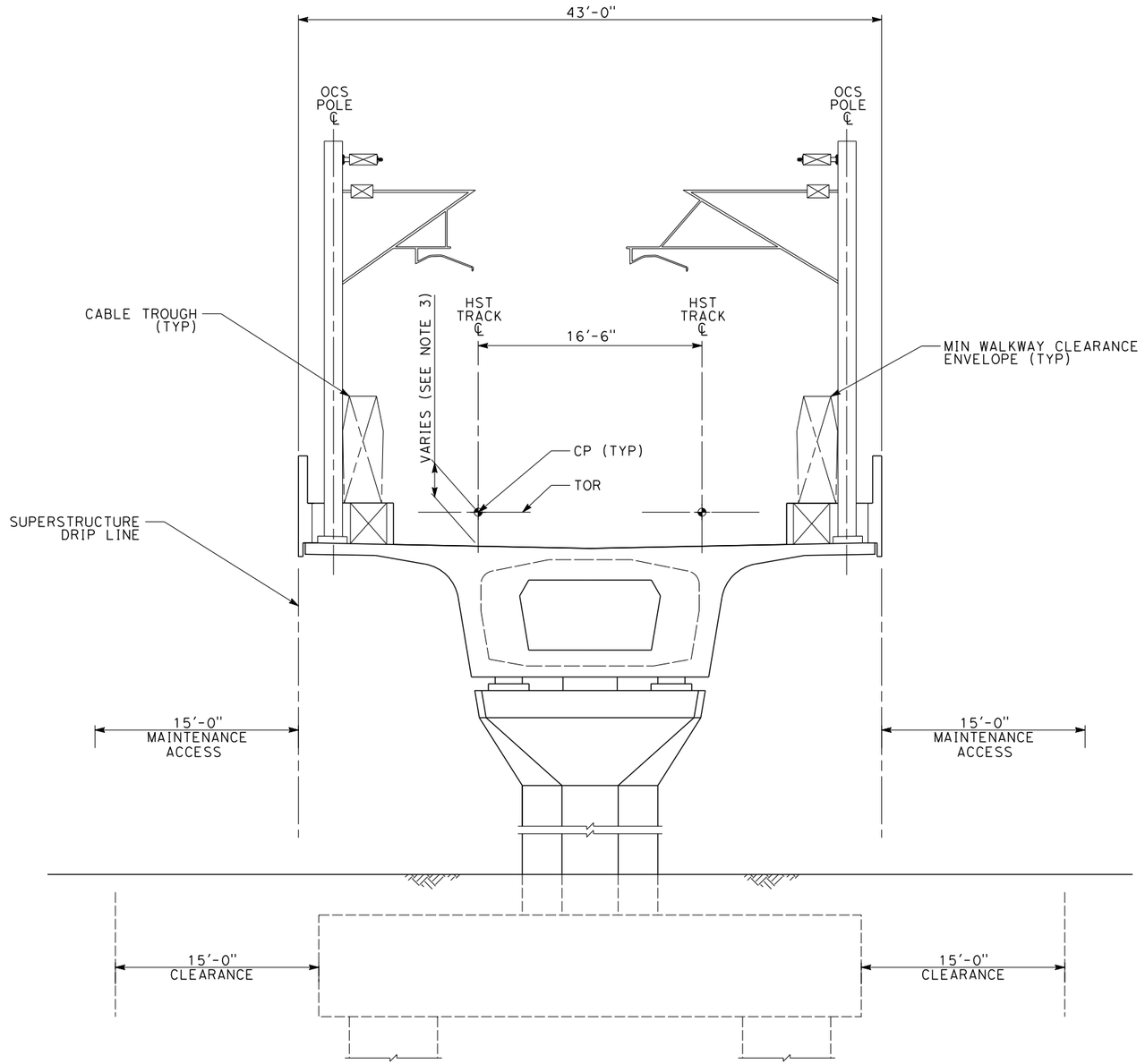

TYPICAL SECTION
AERIAL TRACKWAY

NOTES:

1. STRUCTURE, TRACK, SYSTEMS AND DRAINAGE ARE SCHEMATIC AND DO NOT REPRESENT DESIGN.
2. SUBGRADE THICKNESS SHALL BE DETERMINED BASED ON THE EXISTING GROUND CONDITION.
3. THE CONTROL POINT (CP) SHALL BE 2'-6" ABOVE THE TOP OF STRUCTURE WITH NON-BALLASTED TRACK. FOR BALLASTED TRACK THE CONTROL POINT (CP) SHALL BE LOCATED ABOVE STRUCTURE DECK AT A DISTANCE 2'-9" PLUS ALLOWANCE FOR WATER PROOFING MEMBRANE AND PROTECTION LAYER (IF REQUIRED).
4. PROTECTIVE BARRIER, SUCH AS A BERM OR A DIKE, SHALL BE INSTALLED AT THE RIGHT-OF-WAY BOUNDARY TO INTERCEPT STORM WATER RUN OFF, WHERE THERE IS A POTENTIAL FOR STORM WATER RUN OFF TO ENTER CHST RIGHT-OF-WAY FROM ADJACENT PROPERTY.

RFP No. HSR 14-32 – INITIAL RELEASE - 05/27/2015

REV	DATE	BY	CHK	APP	DESCRIPTION

DESIGNED BY D. MANITI
DRAWN BY R. MINCIO
CHECKED BY G. HARRIS
IN CHARGE G. LUSHEROVICH
DATE 01/24/2014

PARSONS BRINCKERHOFF

CALIFORNIA HIGH-SPEED RAIL AUTHORITY

CALIFORNIA HIGH-SPEED TRAIN PROJECT
CIVIL DIRECTIVE

TYPICAL CROSS SECTION
TWO TRACK
AERIAL TRACKWAY

CONTRACT NO.
DRAWING NO. DD-CV-105
SCALE AS SHOWN
SHEET NO.

2/27/2014 4:27:12 PM CAHSRP.tbl CHSR_half_black.plt c:\projectwise\pb\projectwise\int\mincio\dms32166\DD-CV-105.dgn mincio

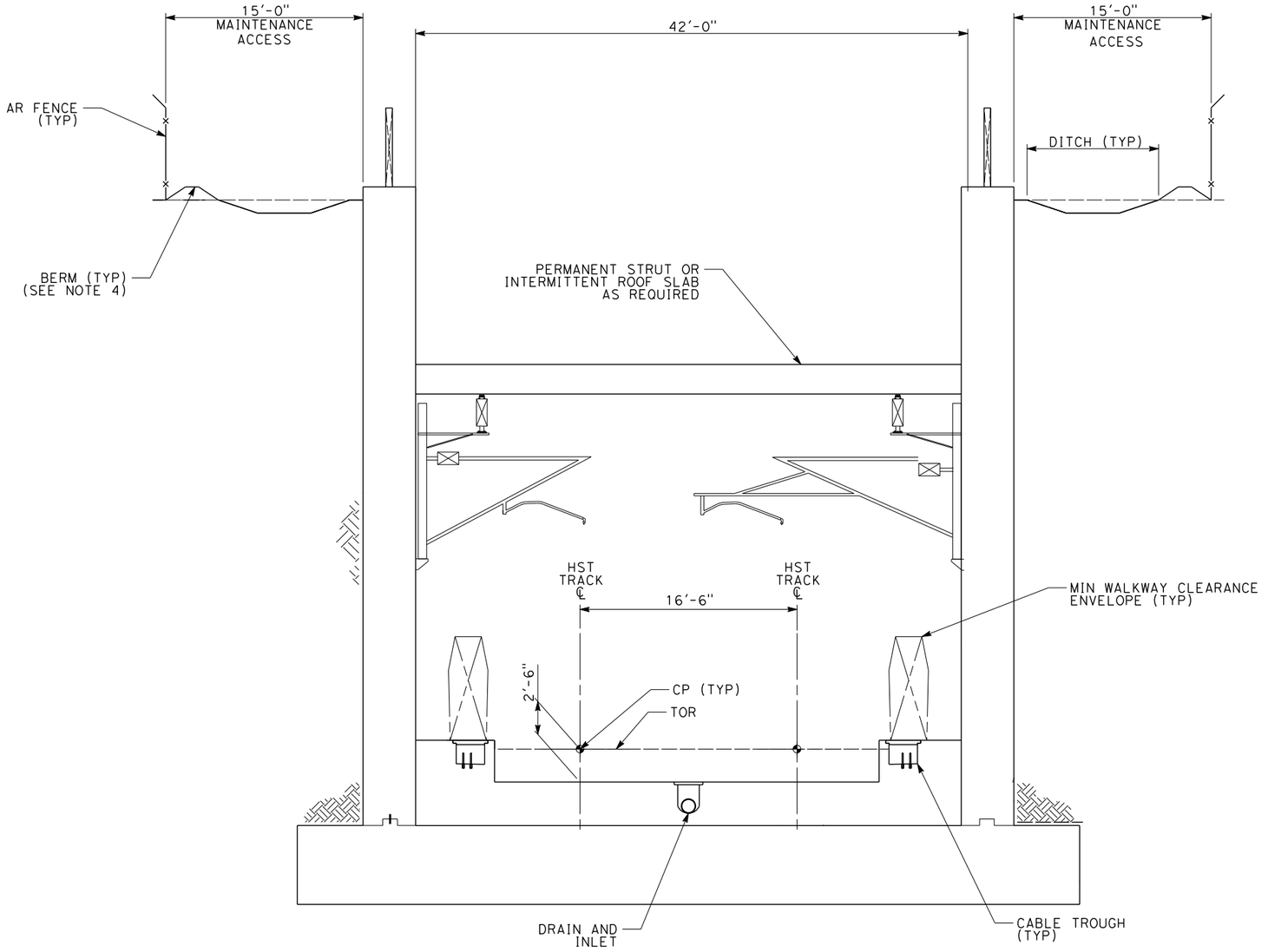

TYPICAL SECTION
TRENCH

NOTES:

1. STRUCTURE, TRACK, SYSTEMS AND DRAINAGE ARE SCHEMATIC AND DO NOT REPRESENT DESIGN.
2. SUBGRADE THICKNESS SHALL BE DETERMINED BASED ON THE EXISTING GROUND CONDITION.
3. THE CONTROL POINT (CP) SHALL BE 2'-6" ABOVE THE TOP OF SUBBALLAST.
4. PROTECTIVE BARRIER, SUCH AS A BERM OR A DIKE, SHALL BE INSTALLED AT THE RIGHT-OF-WAY BOUNDARY TO INTERCEPT STORM WATER RUN OFF, WHERE THERE IS A POTENTIAL FOR STORM WATER RUN OFF TO ENTER CHST RIGHT-OF-WAY FROM ADJACENT PROPERTY.

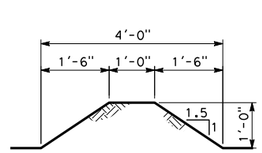

BERM

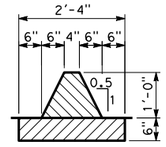

AC DIKE

PROTECTIVE BARRIER DETAILS
(SEE NOTE 5)

RFP No. HSR 14-32 – INITIAL RELEASE - 05/27/2015

REV	DATE	BY	CHK	APP	DESCRIPTION

DESIGNED BY D. MANITI
DRAWN BY R. MINCIO
CHECKED BY G. HARRIS
IN CHARGE G. LUSHEROVICH
DATE 01/24/2014

PARSONS BRINCKERHOFF

CALIFORNIA HIGH-SPEED RAIL AUTHORITY

CALIFORNIA HIGH-SPEED TRAIN PROJECT
CIVIL DIRECTIVE

TYPICAL CROSS SECTION
TWO TRACK
TRENCH STRUCTURE

CONTRACT NO.
DRAWING NO. DD-CV-106
SCALE AS SHOWN
SHEET NO.

mincio 3/28/2014 4:45:31 PM CAHSRP.tbl CHSR_half_black.plt c:\projectwise\pb\projectwise\mincio\dms32166\DD-CV-106.dgn

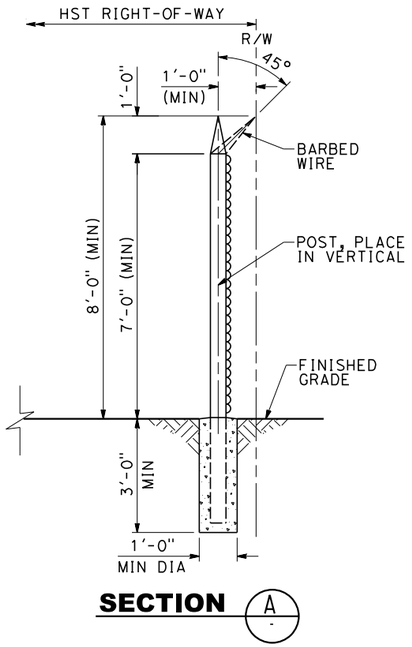

SECTION A

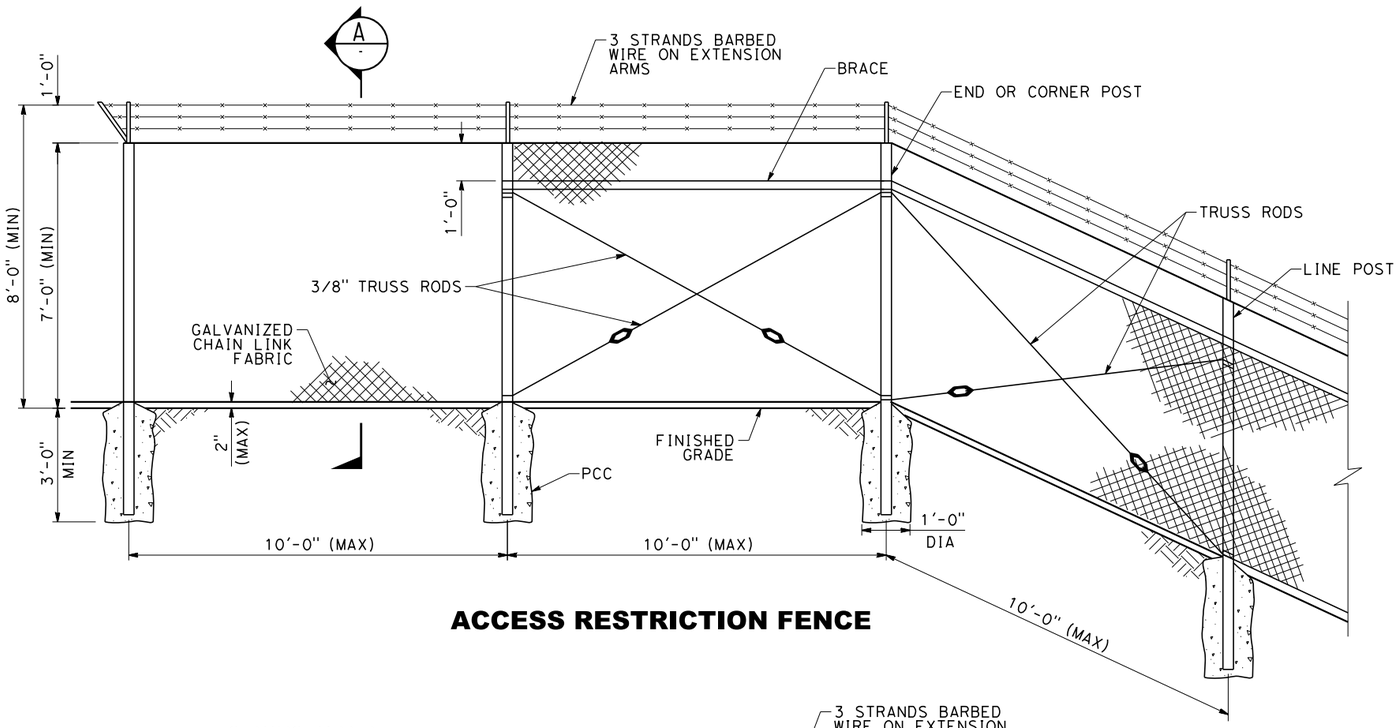

ACCESS RESTRICTION FENCE

NOTES:

1. ALL PERMANENT FENCING AND GATES SHALL BE BONDED, GROUNDED AND INSULATED TO PREVENT ELECTRIC SHOCK.
2. ACCESS RESTRICTION (AR) FENCING SHALL BE 8 FEET HIGH MINIMUM (AS SHOWN HERE). ACCESS DETERRING (AD) FENCING (NOT SHOWN) SHALL BE 6 FEET HIGH, WITH NO BARBED WIRE.
3. GATES FOR VEHICULAR ACCESS (DRIVING GATES) SHALL BE SIZED IN COORDINATION WITH EMERGENCY RESPONDERS AND MAINTENANCE EQUIPMENT. IF NO OTHER INFORMATION IS AVAILABLE THESE GATES SHOULD HAVE A MINIMUM WIDTH OF 12 FEET.
4. GATES CAN EITHER BE SWINGING OR SLIDING TYPE. VEHICULAR ACCESS SWINGING GATES SHALL BE A PAIR AND SHALL BE HINGED FROM THE INSIDE. PROVISIONS SHALL BE MADE FOR SWINGING GATES TO SWING NOT LESS THAN 90 DEGREES AWAY FROM THE HST FACILITIES.
5. THIS DRAWING DEPICTS MINIMUM STANDARDS FOR RIGHT-OF-WAY FENCING AND GATE. ALTERNATIVE FENCE TYPE OF EQUIVALENT OR ENHANCED KIND MAY BE ALLOWED UPON APPROVAL OF THE AUTHORITY.
6. FENCE AND GATES SHALL BE DESIGNED AND INSTALLED TO NOT PRECLUDE FUTURE INSTALLATION OF TYPICAL FENCE MOUNTED ELECTRONIC ACCESS CONTROL.
7. FOR ADDITIONAL FENCE INSTALLATION DETAILS SEE CALTRANS STANDARD PLANS.

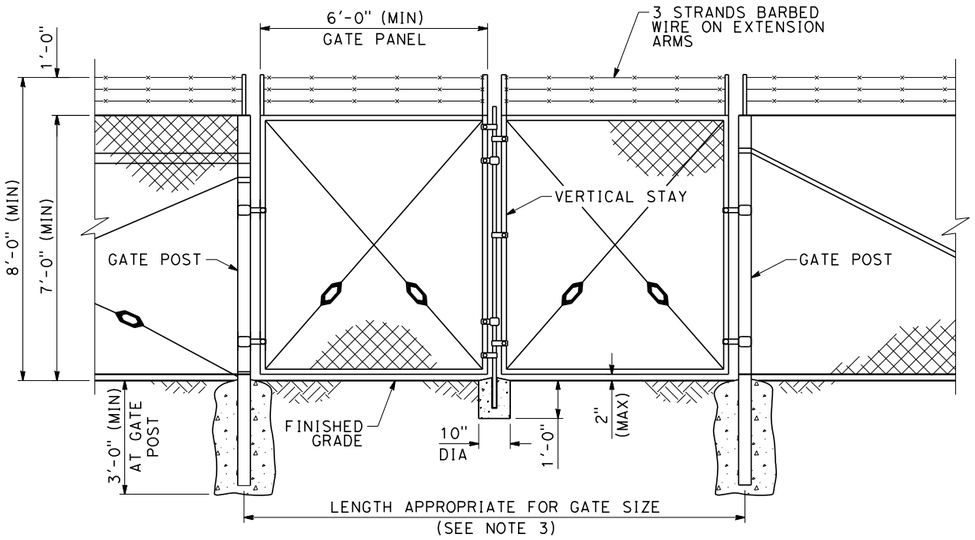

VEHICLE ACCESS GATE ALONG AR FENCE

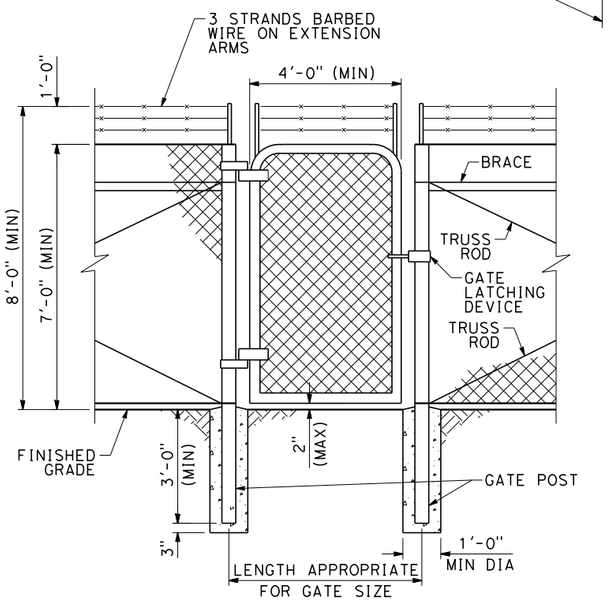

PEDESTRIAN ACCESS GATE ALONG AR FENCE

2 0 2 4
1/2"=1'-0"

REV	DATE	BY	CHK	APP	DESCRIPTION

DESIGNED BY S. MILITELLO
DRAWN BY V. LAVERDE
CHECKED BY A. ABTAHI
IN CHARGE G. LUSHEROVICH
DATE 08/29/2014

PARSONS BRINCKERHOFF

CALIFORNIA HIGH-SPEED RAIL AUTHORITY

CALIFORNIA HIGH-SPEED TRAIN PROJECT
CIVIL DIRECTIVE

ACCESS RESTRICTION
FENCE AND GATE DETAILS

CONTRACT NO.
DRAWING NO. DD-CV-900
SCALE AS SHOWN
SHEET NO.

RFP No. HSR 14-32 – INITIAL RELEASE - 05/27/2015

LaverdeV 9/30/2014 11:40:16 AM CAHSRP.tbl CHSR_PDF_half_black.plt c:\projectwise\pb\projectwise\int\laverdev\dms32166\DD-CV-900.dgn

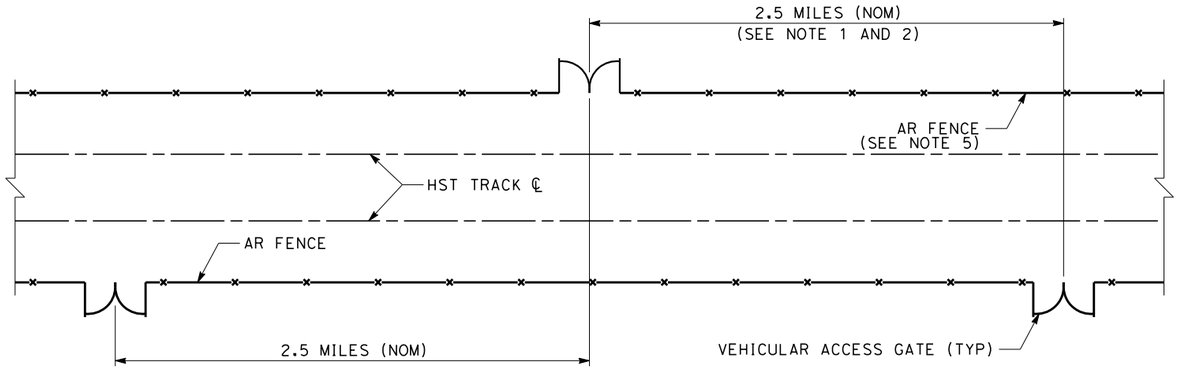

GATE LOCATIONS ALONG HST TRACKWAY
AT GRADE

NOTES:

1. LOCATION OF GATES ALONG RIGHT-OF-WAY FENCING MAY REQUIRE COORDINATION WITH THE LOCAL FIRE PROTECTION AGENCY AND EMERGENCY RESPONDERS.
2. IN GENERAL VEHICULAR ACCESS GATE ALONG AT-GRADE TRACKWAY, SHALL BE LOCATED NOMINALLY AT 2.5 MILE INTERVALS AND COORDINATED WITH THE LOCATION OF HST WAYSIDE FACILITIES.
3. GATE LOCATIONS ALONG FENCING WITHIN FREEWAY RIGHT-OF-WAY REQUIRE CALTRANS APPROVAL.
4. VEHICULAR ACCESS GATES SHALL BE PROVIDED IN CONJUNCTION WITH EITHER ACCESS ROADS OR AT LOCATIONS WHERE EXISTING ROADS MAKE IT PRACTICABLE FOR MAINTENANCE AND EMERGENCY VEHICLE TO ACCESS THE TRACKWAY.
5. FOR ADDITIONAL DETAILS SEE CIVIL DRAWING "ACCESS RESTRICTION FENCE AND GATE DETAILS".
6. AD FENCE CAN BE USED IF AR FENCE IS PLACED ALONG THE RIGHT-OF-WAY OR THE HEIGHT OF THE WALL IS GREATER THAN 10 FEET. 15 FOOT MINIMUM REQUIRED TO THE FENCE WHEN AD FENCE IS PLACED ALONG THE RIGHT-OF-WAY.

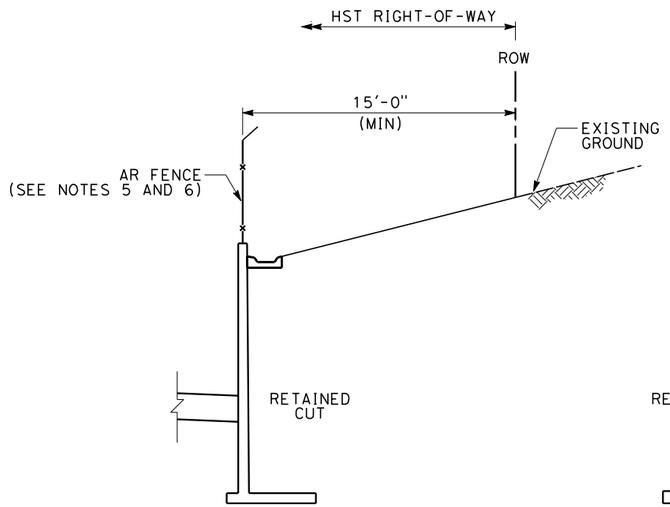

FENCE LOCATION ALONG HST TRACKWAY
RETAINED CUT SECTION

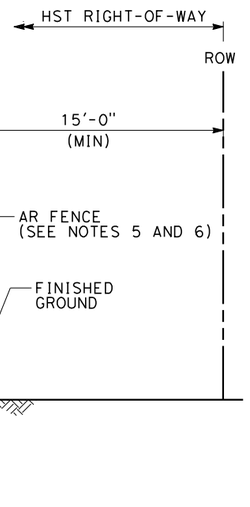

FENCE LOCATION ALONG HST TRACKWAY
RETAINED FILL SECTION

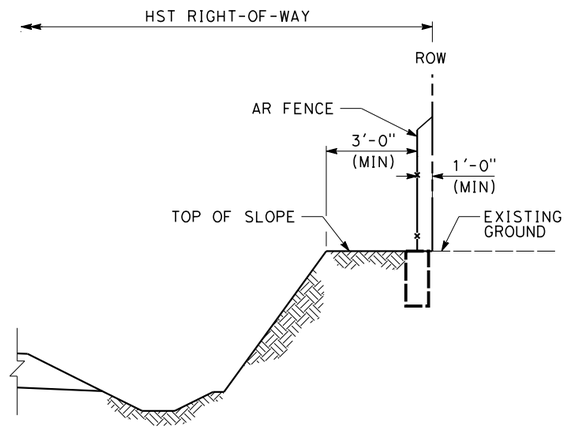

FENCE LOCATION ALONG HST TRACKWAY
OPEN CUT SECTION

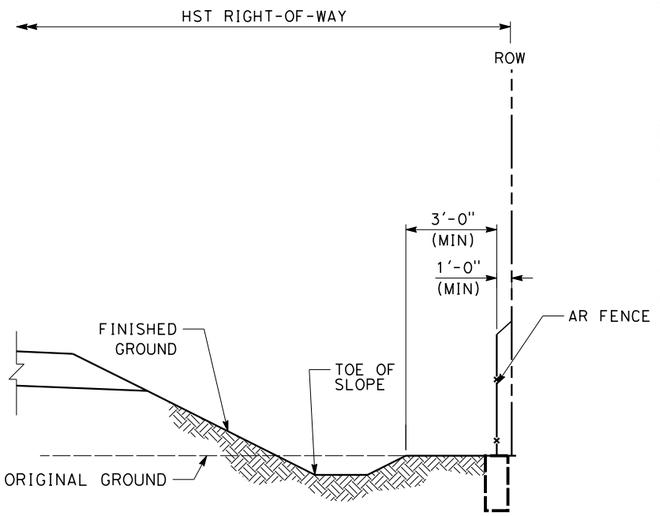

FENCE LOCATION ALONG HST TRACKWAY
EMBANKMENT SECTION

REV	DATE	BY	CHK	APP	DESCRIPTION

DESIGNED BY: S. MILITELLO
DRAWN BY: V. LAVERDE
CHECKED BY: A. ABTAHI
IN CHARGE: G. LUSHEROVICH
DATE: 08/29/2014

PARSONS BRINCKERHOFF

CALIFORNIA HIGH-SPEED RAIL AUTHORITY

CALIFORNIA HIGH-SPEED TRAIN PROJECT
CIVIL DIRECTIVE

ACCESS RESTRICTION
FENCE AND GATE LOCATIONS

CONTRACT NO.
DRAWING NO. DD-CV-901
SCALE NO SCALE
SHEET NO.

RFP No. HSR 14-32 – INITIAL RELEASE - 05/27/2015

Mincio 9/30/2014 12:26:43 PM CAHSRP.tbl CHSR_PDF_half_black.plt c:\projectwise\pb\projectwise\dms32166\DD-CV-901.dgn

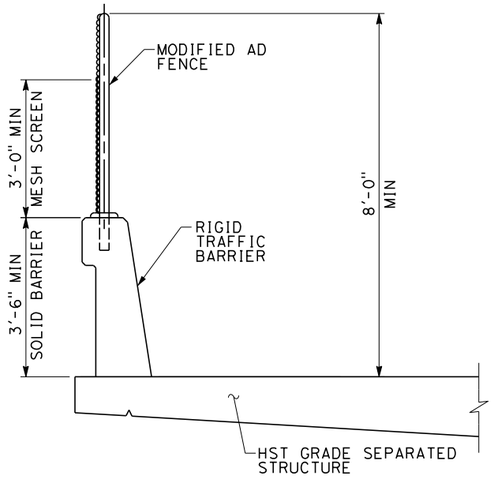

CROSS SECTION
FENCE AT GRADE SEPARATED STRUCTURES
WITHOUT SIDEWALK

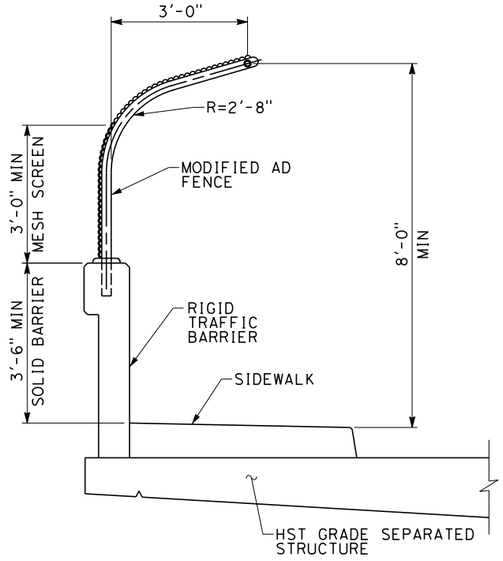

CROSS SECTION
FENCE AT GRADE SEPARATED STRUCTURES
WITH SIDEWALK

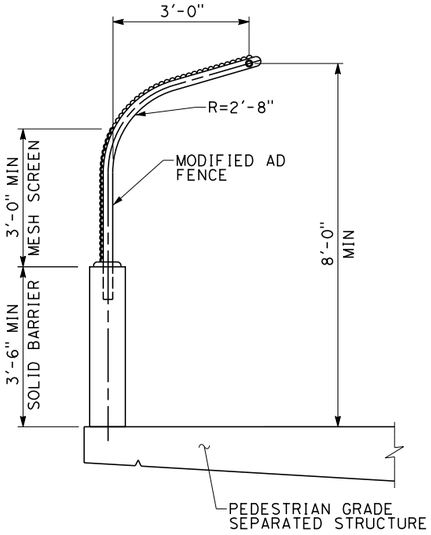

CROSS SECTION
FENCE AT PEDESTRIAN
GRADE SEPARATED STRUCTURE

NOTES:

1. TRACK, SYSTEMS, STRUCTURES AND DRAINAGE ARE SCHEMATIC AND DO NOT REPRESENT DESIGN.
2. FOR MESH SCREEN REQUIREMENT, SEE OVERHEAD CONTACT SYSTEM AND TRACTION POWER RETURN SYSTEM CHAPTER OF THE DESIGN CRITERIA.
3. EXTEND MESH SCREEN 30 FEET FROM CENTERLINE OF OUTERMOST TRACK, OR 10 FEET BEYOND THE OUTERMOST ENERGIZED CONDUCTOR OR COMPONENT, WHICHEVER IS GREATER.

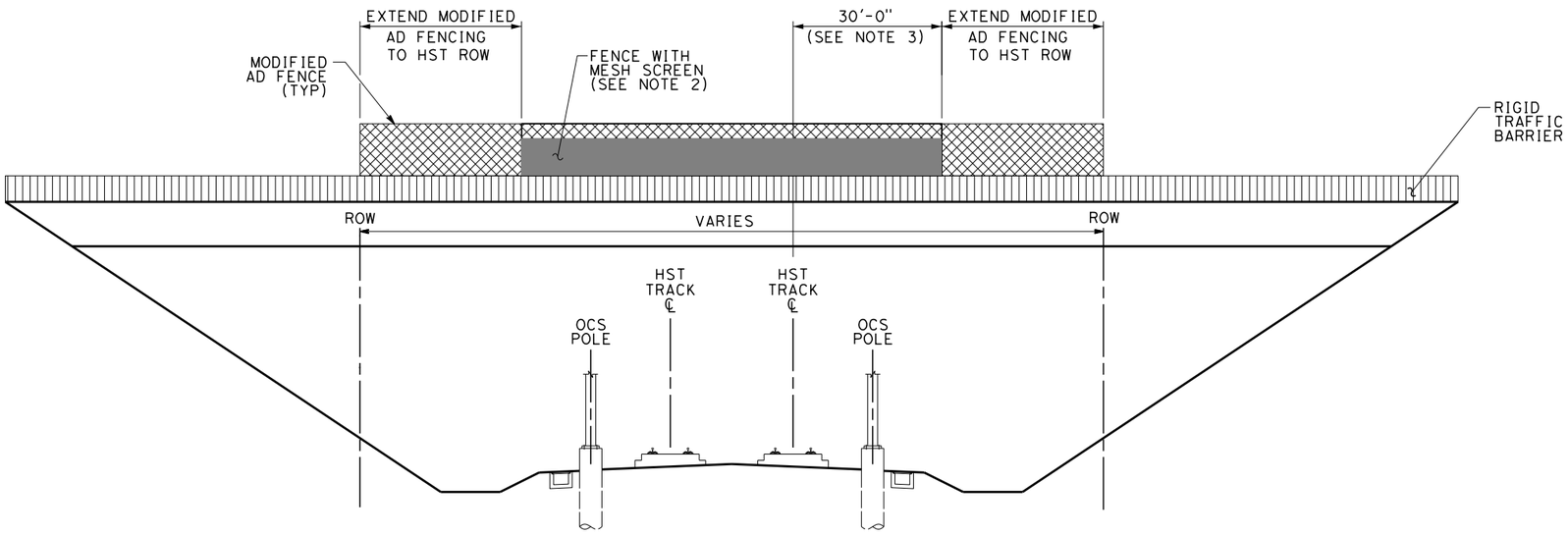

OVERHEAD STRUCTURE ELEVATION

REV	DATE	BY	CHK	APP	DESCRIPTION

DESIGNED BY A. ABTAHI
DRAWN BY V. LAVERDE
CHECKED BY S. MILITELLO
IN CHARGE G. LUSHEROVICH
DATE 08/29/2014

PARSONS BRINCKERHOFF

CALIFORNIA HIGH-SPEED RAIL AUTHORITY

CALIFORNIA HIGH-SPEED TRAIN PROJECT
CIVIL DIRECTIVE

ACCESS DETERRING
FENCING ON GRADE SEPARATED STRUCTURES

CONTRACT NO.
DRAWING NO. DD-CV-902
SCALE NO SCALE
SHEET NO.

RFP No. HSR 14-32 – INITIAL RELEASE - 05/27/2015

LaverdeV 9/30/2014 11:41:34 AM CAHSRP.tbl CHSR_PDF_half_black.plt c:\projectwise\pb\projectwise\int\laverdev\dms32166\DD-CV-902.dgn

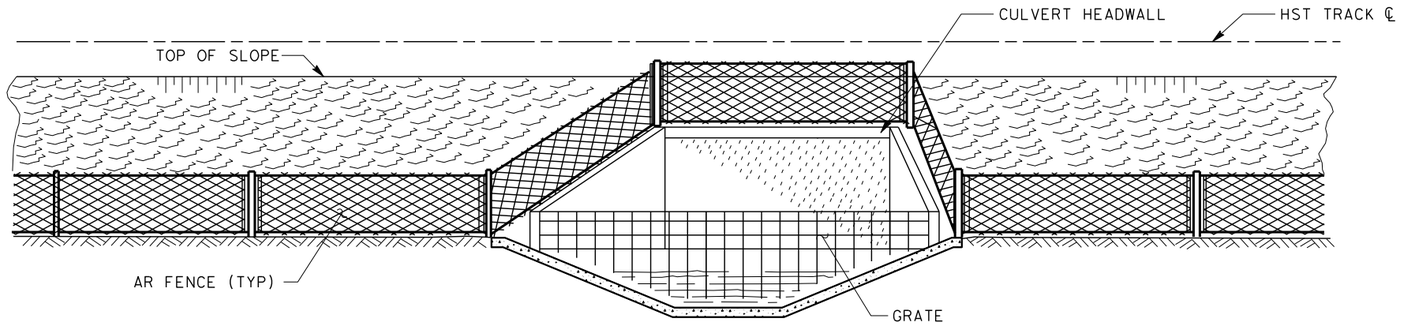

ELEVATION

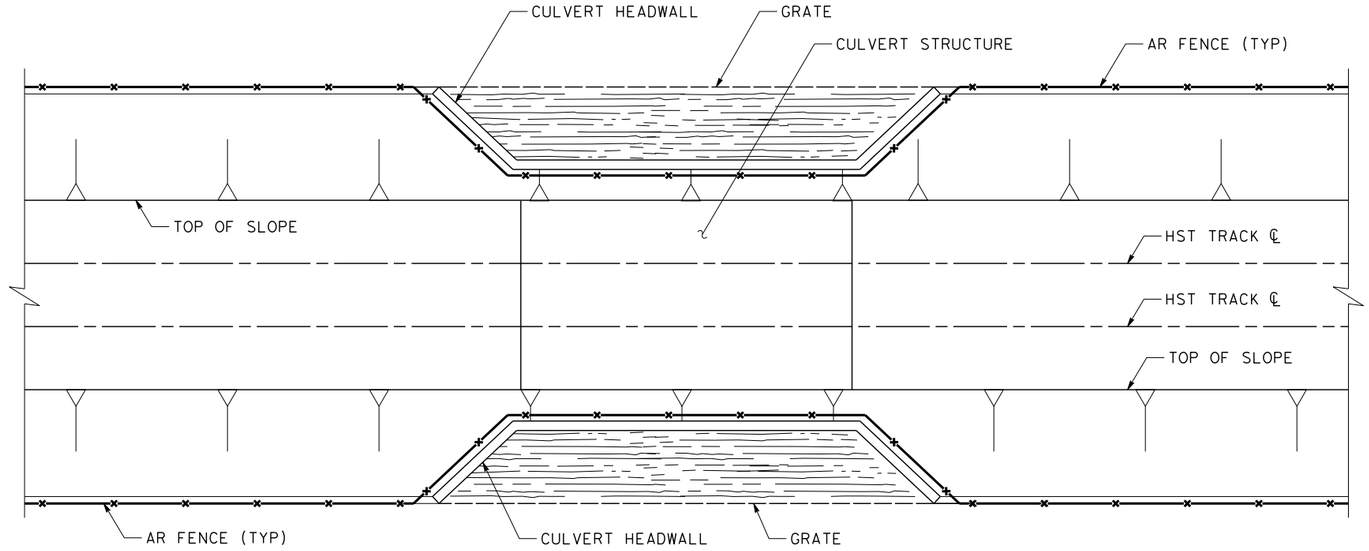

PLAN

NOTES:

1. CULVERT STRUCTURE IS SCHEMATIC AND DOES NOT REPRESENT DESIGN.
2. INSTALL GRATE IN THE CULVERT IF REQUIRED BY THREAT AND VULNERABILITY ANALYSIS, USING THE FOLLOWING CRITERIA:
   - A. GRATES SHALL BE INSTALLED UPSTREAM AND DOWNSTREAM OF CULVERT HEADWALLS.
   - B. GRATES SHALL HAVE BARS SPACED 6 INCHES APART AND SHALL BE DESIGNED TO WITHSTAND MAXIMUM IMPACT FROM LARGEST EXPECTED FLOATING DEBRIS.
   - C. THE MAXIMUM DISTANCE FROM THE BOTTOM OF THE GRATE TO THE BOTTOM AND SIDE SLOPES OF THE WATERWAY CROSSING SHALL BE 6 INCHES.
   - D. THE MINIMUM HEIGHT OF THE GRATES SHALL BE SUCH THAT IT RESTRICTS ACCESS DURING ALL CONDITIONS (DRY, HIGH WATER, ETC).
   - E. GRATE INSTALLATIONS SHALL BE COORDINATED WITH THE HYDRAULIC ENGINEER TO ENSURE PRESERVATION OF THE CULVERT FLOW CAPACITY.
3. INSTALLATION OF GRATES IN DESIGNATED WILDLIFE CORRIDORS ARE SUBJECT TO APPROVAL BY THE APPROPRIATE REGULATORY AGENCY.

RFP No. HSR 14-32 – INITIAL RELEASE - 05/27/2015

REV	DATE	BY	CHK	APP	DESCRIPTION

DESIGNED BY S. MILITELLO
DRAWN BY V. HUANTE
CHECKED BY A. ABTAHI
IN CHARGE G. LUSHEROVICH
DATE 01/24/2014

PARSONS BRINCKERHOFF

CALIFORNIA HIGH-SPEED RAIL AUTHORITY

CALIFORNIA HIGH-SPEED TRAIN PROJECT
CIVIL DIRECTIVE

FENCE AT CULVERT CROSSINGS

CONTRACT NO.
DRAWING NO. DD-CV-903
SCALE NO SCALE
SHEET NO.

3/28/2014 5:11:43 PM mincio CAHSRP.tbl CHSR_half_black.plt c:\projectwise\pb\projectwiseint\mincio\dms32166\DD-CV-903.dgn

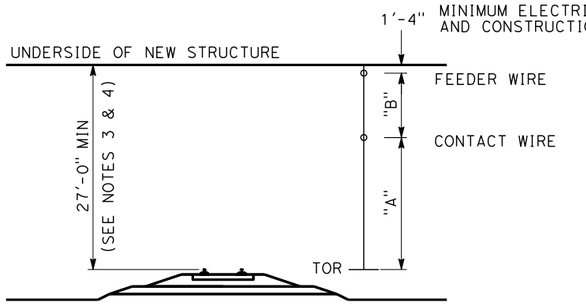

NEW STRUCTURE OVER HST TRACKS

	HEIGHT "A"	HEIGHT "B"	MIN VERTICAL CLEARANCE
DEDICATED HST TRACK	17'-5"	8'-3"	27'-0"
SHARED USE TRACK	18'-9"	6'-11"	27'-0"

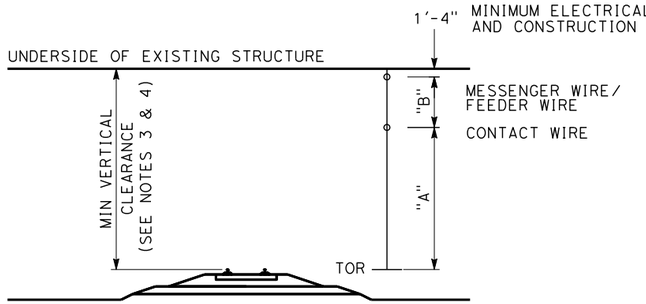

EXISTING STRUCTURE OVER HST TRACKS

	HEIGHT "A"	HEIGHT "B"	MIN VERTICAL CLEARANCE
DEDICATED HST TRACK	17'-5"	8'-3"	27'-0"
DEDICATED HST TRACK (V ≤ 125 MPH)	17'-5"	5'-3"	24'-0"*
SHARED USE TRACK	18'-9"	4'-0"	24'-6"**

* SEE NOTE 4
** PER CALTRAIN

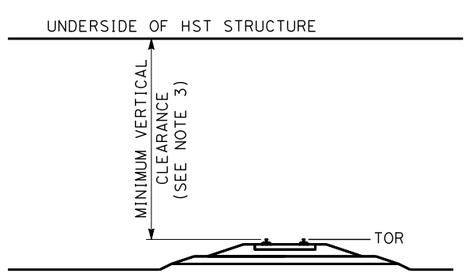

NEW HST STRUCTURE OVER TRACK

	MIN VERTICAL CLEARANCE
FREIGHT TRACKS	
BNSF	23'-4"
UPRR	23'-0"
NON-FREIGHT TRACKS	
METROLINK	24'-0"
CALTRAIN	24'-6"

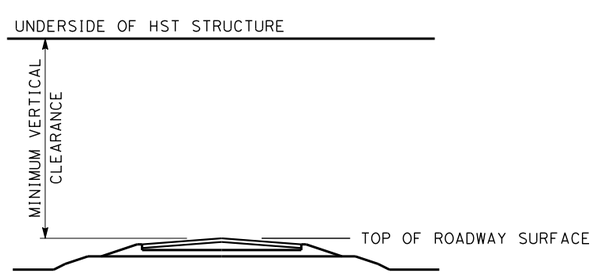

NEW HST STRUCTURE OVER ROADWAY

	MIN VERTICAL CLEARANCE
FREEWAY/EXPRESSWAY	16'-6"
LOCAL ROADWAY	15'-0" *
EXTRA LEGAL LOAD NETWORK(ELLN)	20'-3"

* SEE NOTE 6

NOTES:

1. TOLERANCES ARE NOT ADDITIVE FOR INCREMENTAL DISTANCES.
2. HST TRACKFORM IS SCHEMATIC AND DOES NOT REPRESENT THE DESIGN.
3. AT LOCATIONS WHERE SUPERELEVATION IS PRESENT, VERTICAL CLEARANCES SHALL BE MEASURED FROM THE HIGH RAIL.
4. DEFINED CLEARANCES ASSUMES GRADE SEPARATED STRUCTURE LENGTH ALONG TRACK IS NO MORE THAN 160 FEET FOR HST TRACK OVER 125 MPH. THE OCS SHALL BE FREE RUNNING UNDER GRADE SEPARATED STRUCTURES WITH NO SUPPORTS. STRUCTURES WIDER THAN 160 FEET REQUIRE FURTHER APPROVAL.
5. PROTECTIVE PANEL IS REQUIRED FOR VERTICAL CLEARANCES LESS THAN THE PANTOGRAPH ZONE HEIGHT (26 FEET - 3 INCHES) FOR STRUCTURES OVER HST TRACKS.
6. FOR LOCAL ROADWAYS, 15 FEET MINIMUM VERTICAL CLEARANCE SHALL BE CONFIRMED BY AGENCY HAVING JURISDICTION.
7. PROTECTIVE STRUCTURE IS REQUIRED IF SIDE CLEARANCE IS LESS THAN 25 FEET. SEE THE AREMA MANUAL FOR RAILWAY ENGINEERING FOR PIER PROTECTION REQUIREMENTS.
8. PROTECTIVE TRAFFIC BARRIER REQUIREMENTS SHALL BE CONFIRMED BY AGENCY HAVING JURISDICTION.
9. SIDE CLEARANCE DESIGN CRITERIA SHALL BE CONFIRMED BY AGENCY HAVING JURISDICTION.

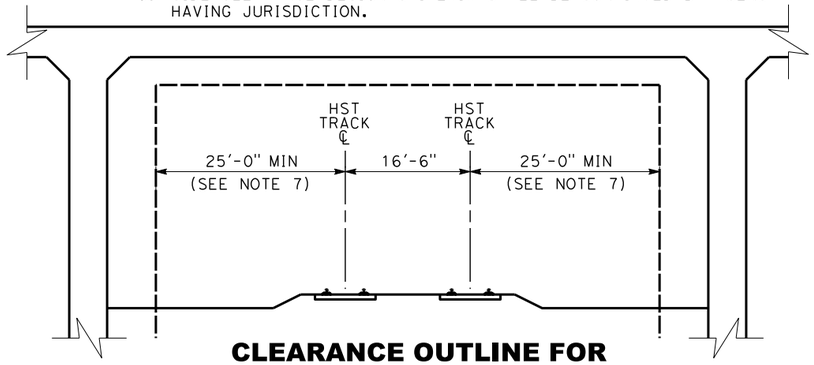

CLEARANCE OUTLINE FOR NEW STRUCTURE OVER HST

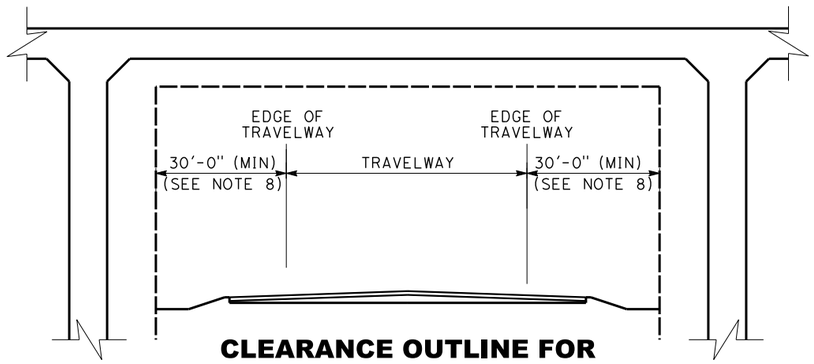

CLEARANCE OUTLINE FOR NEW HST STRUCTURE OVER ROADWAY

	MIN SIDE CLEARANCE
FREEWAY/EXPRESSWAY	30'-0"
OTHER	SEE NOTE 9

RFP No. HSR 14-32 – INITIAL RELEASE - 05/27/2015

REV	DATE	BY	CHK	APP	DESCRIPTION

DESIGNED BY S. MILITELLO
DRAWN BY V. HUANTE
CHECKED BY H. NGUYEN
IN CHARGE G. LUSHEROVICH
DATE 01/24/2014

PARSONS BRINCKERHOFF

CALIFORNIA HIGH-SPEED RAIL AUTHORITY

CALIFORNIA HIGH-SPEED TRAIN PROJECT
CIVIL DIRECTIVE

MINIMUM CLEARANCE
GRADE SEPARATED STRUCTURES

CONTRACT NO.
DRAWING NO. DD-CV-904
SCALE NO SCALE
SHEET NO.

mincio 3/28/2014 5:17:45 PM CAHSRP.tbl CHSR_half_black.plt c:\projectwise\pb\projectwiseint\mincio\dms32166\DD-CV-904.dgn

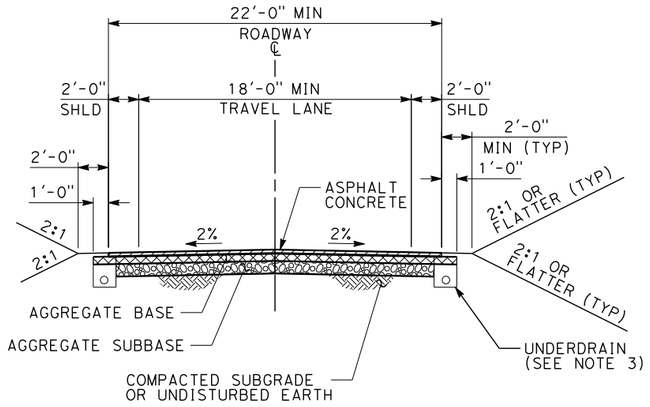

TYPICAL 22 FT ROADWAY SECTION-PAVED

CLOSED DRAINAGE

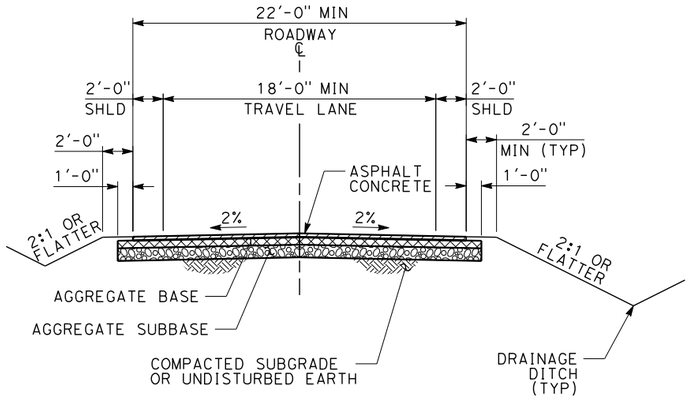

TYPICAL 22 FT ROADWAY SECTION-PAVED

OPEN DRAINAGE

NOTES:

1. AUTHORITY ROADWAYS ARE REFERRED TO AS ACCESS ROADS AND SERVICE ROADS.
2. UNPAVED ROADWAYS CAN BE USED AS TEMPORARY ACCESS TO SITES.
3. REFER TO CALTRANS STANDARD PLANS FOR:

   A) CURBS AND DRIVEWAYS (A87A)
   B) UNDERDRAINS (D102)
4. IF FIRE HYDRANT IS LOCATED ON ROAD, MINIMUM ROADWAY WIDTH SHALL BE 26 FEET.
5. TWO-WAY SERVICE ROADS SHALL BE 24 FEET WIDE WITH NO SHOULDERS.
6. COMPACT SUBGRADE TO 95% COMPACTION.

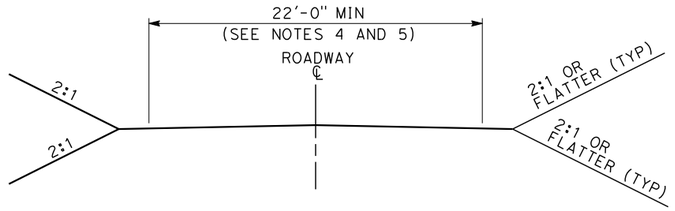

AUTHORITY ROADWAYS WIDTH

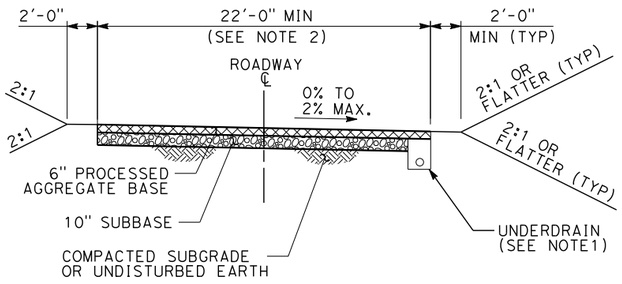

TYPICAL 22 FT ROADWAY SECTION-UNPAVED

CLOSED DRAINAGE

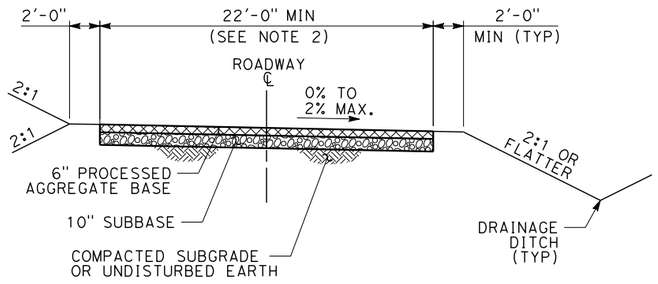

TYPICAL 22 FT ROADWAY SECTION-UNPAVED

OPEN DRAINAGE

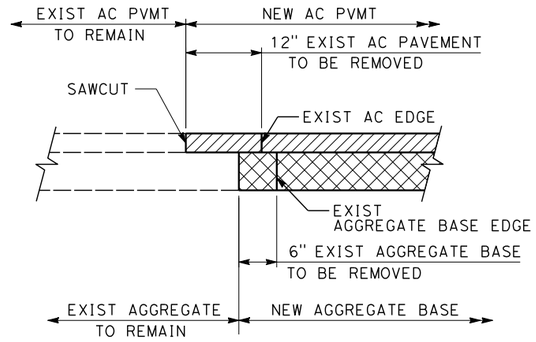

PAVEMENT CONNECTION DETAIL

SCALE: 1"=1'-0"

5 0 5 10
1"=5'

RFP No. HSR 14-32 – INITIAL RELEASE - 05/27/2015

REV	DATE	BY	CHK	APP	DESCRIPTION

DESIGNED BY: S. MILITELLO
DRAWN BY: V. HUANTE
CHECKED BY: A. ABTAHI
IN CHARGE: G. LUSHEROVICH
DATE: 01/24/2014

PARSONS BRINCKERHOFF

CALIFORNIA HIGH-SPEED RAIL AUTHORITY

CALIFORNIA HIGH-SPEED TRAIN PROJECT
CIVIL DIRECTIVE

AUTHORITY ROADWAYS

CONTRACT NO.
DRAWING NO. DD-CV-905
SCALE AS SHOWN
SHEET NO.

mincio 3/28/2014 11:13:31 AM CAHSRP.tbl CHSR_half_black.plt c:\projectwise\pb\projectwiseint\mincio\dms32166\DD-CV-905.dgn

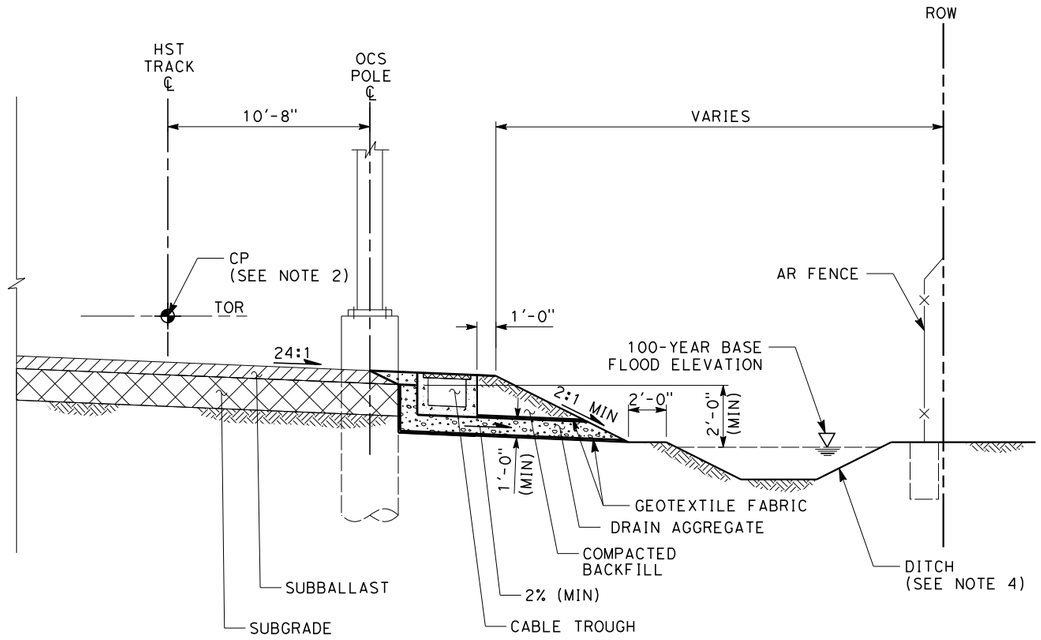

TYPICAL SECTION
AT GRADE TRACK OPEN DRAINAGE SYSTEM

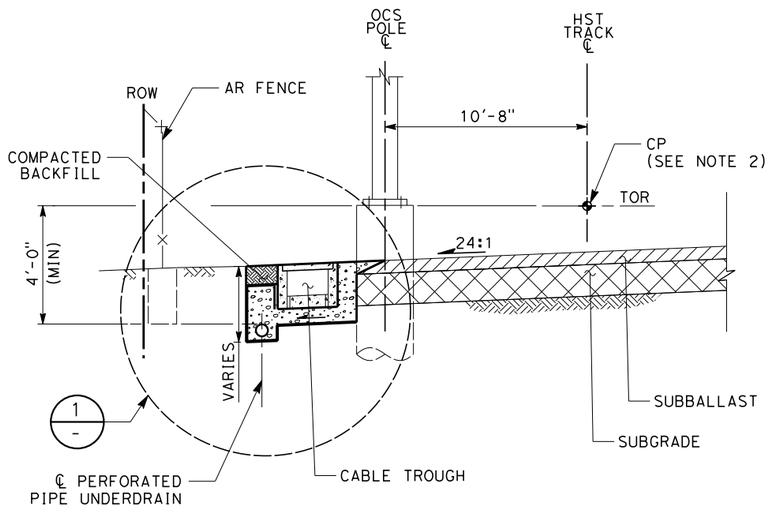

TYPICAL SECTION
AT GRADE TRACK CLOSED DRAINAGE SYSTEM

NOTES:

1. TRACK AND SYSTEMS ARE SCHEMATIC AND DO NOT REPRESENT DESIGN.
2. THE CONTROL POINT (CP) IS THE INTERSECTION OF THE CENTERLINE OF TRACK AND THE TOP OF THE RAIL, FOR SUPERELEVATED TRACK SECTIONS THE CP IS THE INTERSECTION OF THE CENTERLINE OF THE TRACK AND THE TOP OF THE LOW RAIL.
3. TRACK DRAINAGE SYSTEM SHALL BE CONNECTED AND DISCHARGE TO THE LOCAL STORM DRAIN SYSTEM.
4. DITCH SHALL CONFORM TO THE FOLLOWING REQUIREMENTS:
   DEPTH OF DITCH = 1' MINIMUM
   SIDE SLOPE =
   2:1 MAXIMUM FOR CONCRETE LINED DITCH AND
   3:1 MAXIMUM FOR GRASS LINED DITCH
   WIDTH OF FLAT BOTTOM = 4' MINIMUM

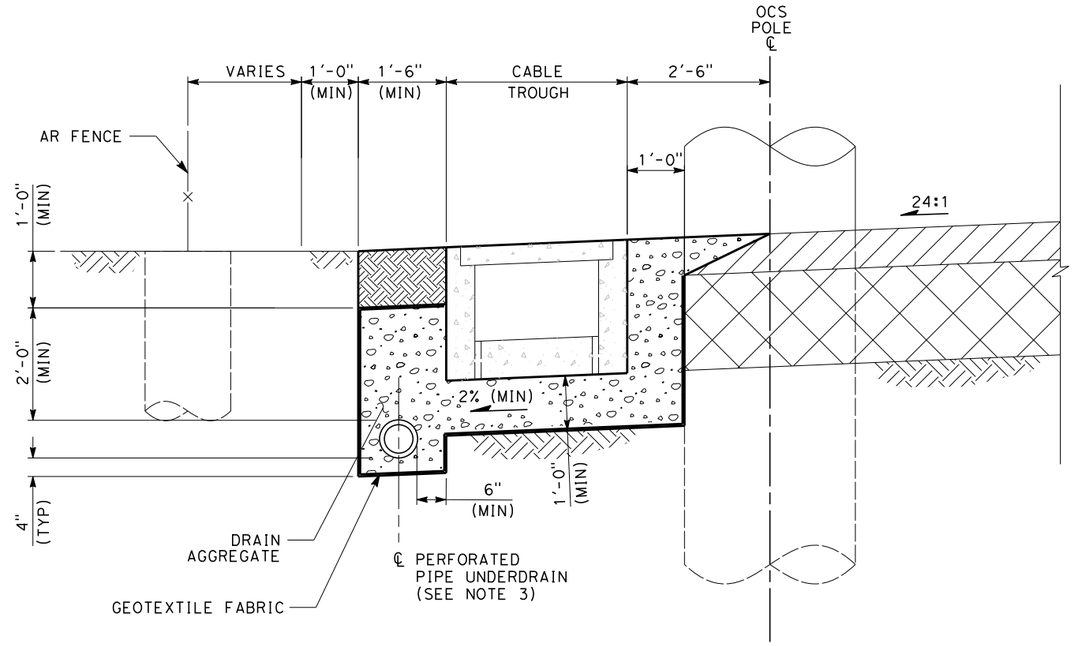

DETAIL
NO SCALE — 1 / -

RFP No. HSR 14-32 – INITIAL RELEASE - 05/27/2015

REV	DATE	BY	CHK	APP	DESCRIPTION

DESIGNED BY K. SISTLA
DRAWN BY V. HUANTE
CHECKED BY A. ABTAHI
IN CHARGE G. LUSHEROVICH
DATE 05/09/2014

PARSONS BRINCKERHOFF

CALIFORNIA HIGH-SPEED RAIL AUTHORITY

CALIFORNIA HIGH-SPEED TRAIN PROJECT
DRAINAGE DIRECTIVE

AT-GRADE TRACK
DRAINAGE SYSTEM

CONTRACT NO.
DRAWING NO. DD-CD-003
SCALE NO SCALE
SHEET NO.

LayerDev 5/21/2014 5:05:36 PM CAHSRP.tbl CHSR_PDF_half_black.plt c:\projectwise\pb\projectwiseint\layerdev\dms32168\DD-CD-003.dgn

NOTES:

1. TRACK, SYSTEMS AND STRUCTURES ARE SCHEMATIC AND DO NOT REPRESENT DESIGN.
2. CLEANOUTS AND PIPE PENETRATIONS FROM THE COLUMNS SHALL BE OUTSIDE OF THE PLASTIC HINGE ZONE.

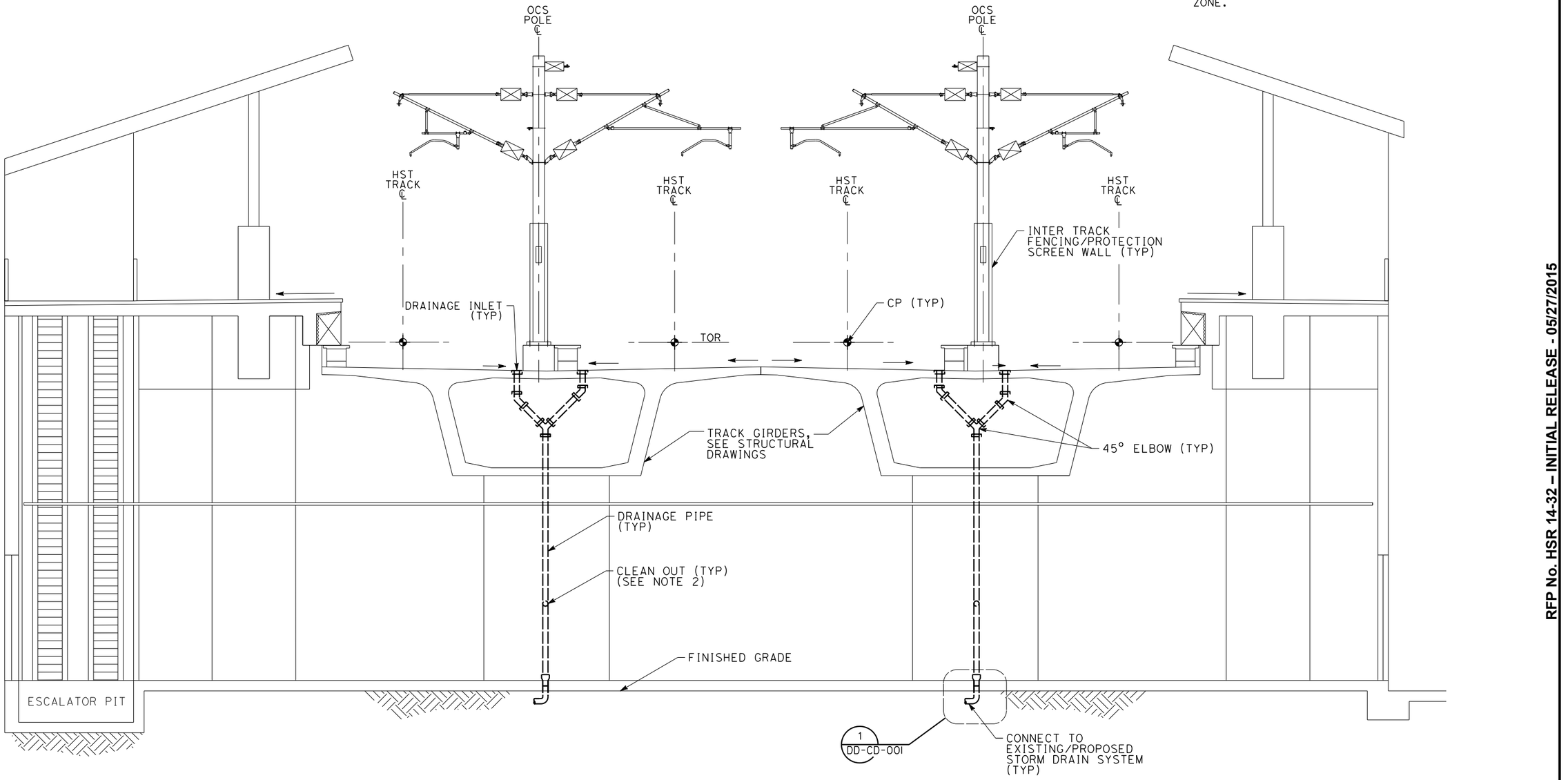

5 0 5 10
1"=5'

REV	DATE	BY	CHK	APP	DESCRIPTION

DESIGNED BY K. SISTLA
DRAWN BY V. HUANTE
CHECKED BY A. ABTAHI
IN CHARGE G. LUSHEROVICH
DATE 01/24/2014

PARSONS BRINCKERHOFF

CALIFORNIA HIGH-SPEED RAIL AUTHORITY

CALIFORNIA HIGH-SPEED TRAIN PROJECT
DRAINAGE DIRECTIVE

ELEVATED STATION PLATFORM
DRAINAGE SYSTEM

CONTRACT NO.
DRAWING NO. DD-CD-010
SCALE AS SHOWN
SHEET NO.

RFP No. HSR 14-32 – INITIAL RELEASE - 05/27/2015

mincio 3/28/2014 11:20:42 AM CAHSRP.tbl CHSR_half_black.plt c:\projectwise\pb\projectwiseint\mincio\dms32168\DD-CD-010.dgn

NOTES:

1. TRACK, SYSTEMS AND STRUCTURES ARE SCHEMATIC AND DO NOT REPRESENT DESIGN.
2. FOR DRAINAGE SYSTEM DETAILS SEE DD-CD-001.
3. THE 8" HALF CIRCLE PERFORATED PIPE SHALL BE INSTALLED ALONG THE ENTIRE INVERTED CROWN OF THE BRIDGE DECK, EXCEPT AT THE EXPANSION JOINT.

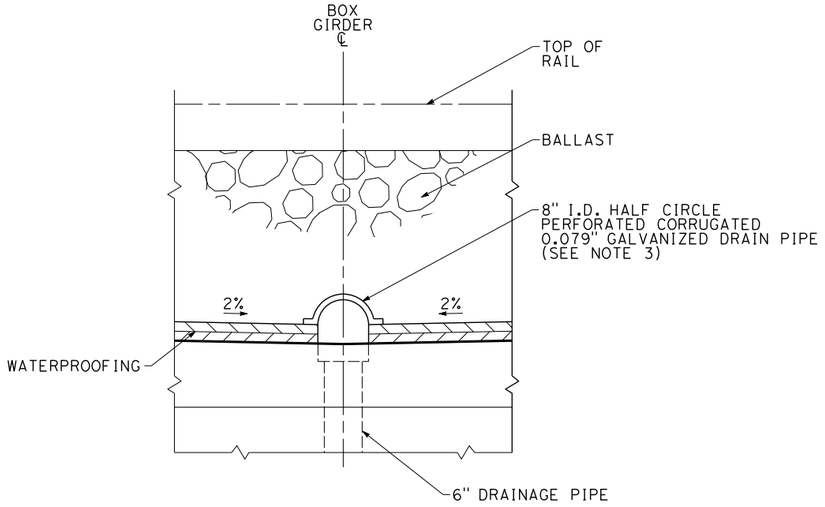

1 **DRAIN DETAIL**
ON CONCRETE DECK

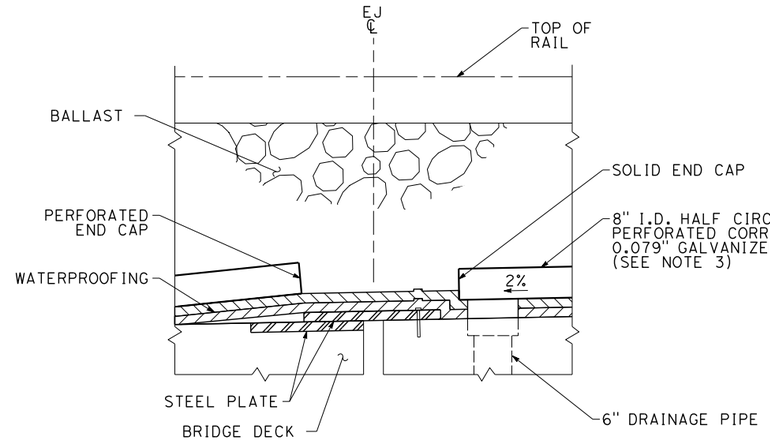

2 **EXPANSION JOINT DETAIL**
ON BALLASTED AERIAL STRUCTURE

RFP No. HSR 14-32 – INITIAL RELEASE - 05/27/2015

REV	DATE	BY	CHK	APP	DESCRIPTION

DESIGNED BY A. ABTAHI
DRAWN BY V. HUANTE
CHECKED BY H. NGUYEN
IN CHARGE G. LUSHEROVICH
DATE 01/24/2014

PARSONS BRINCKERHOFF

CALIFORNIA HIGH-SPEED RAIL AUTHORITY

CALIFORNIA HIGH-SPEED TRAIN PROJECT
DRAINAGE DIRECTIVE

BALLASTED AERIAL STRUCTURE
DECK DRAINAGE SYSTEM DETAILS

CONTRACT NO. 13259
DRAWING NO. DD-CD-901
SCALE NO SCALE
SHEET NO.

3/28/2014 11:22:32 AM mincio c:\projectwise\pb\projectwise\int\mincio\dms32168\DD-CD-901.dgn CAHSRP.tbl CHSR_half_black.plt

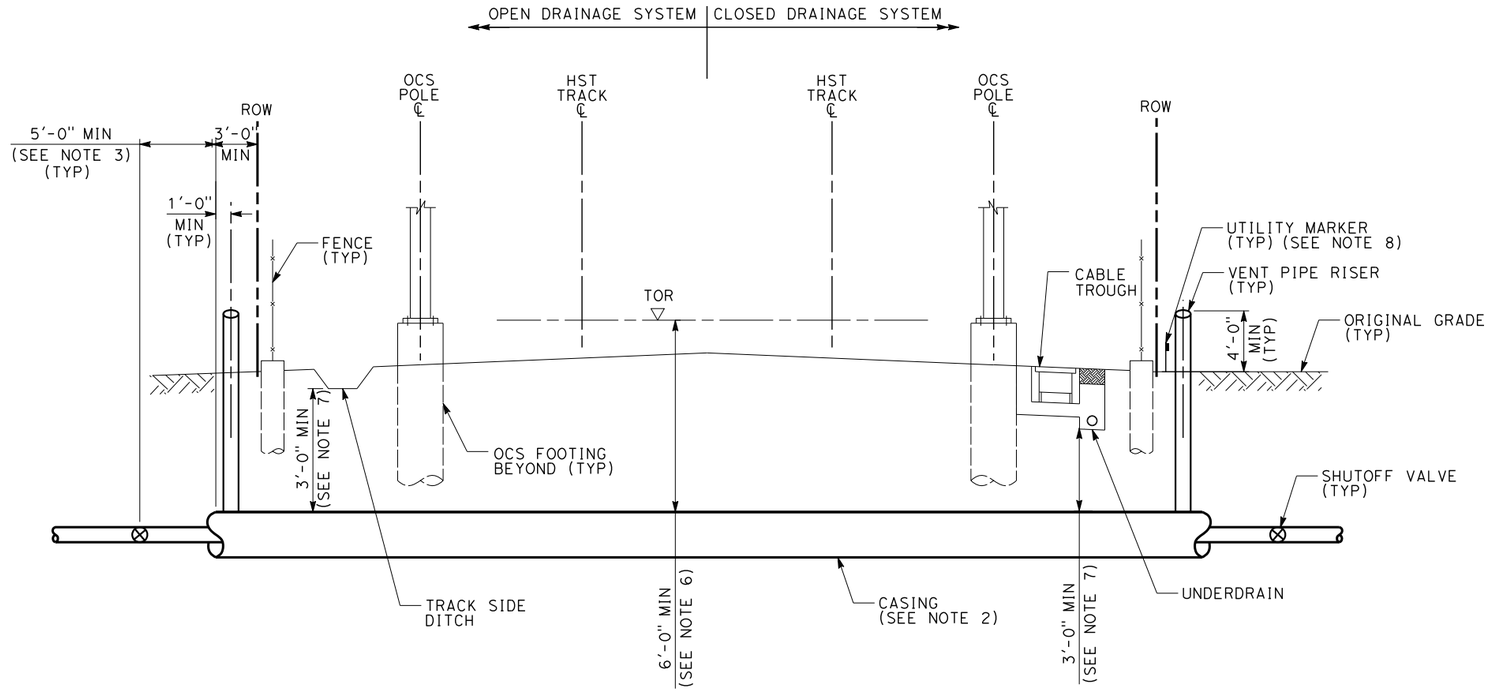

NOTES:

1. TRACK, SYSTEMS, DRAINAGE, AND STRUCTURES ARE SCHEMATIC AND DO NOT REPRESENT DESIGN.
2. FOR ADDITIONAL REQUIREMENTS, SEE AREMA MANUAL.
3. SHUTOFF VALVE MUST BE ACCESSIBLE FROM OUTSIDE THE RIGHT OF WAY. IT MAY NOT BE REQUIRED ON BOTH SIDES.
4. THE CASING SHALL CONTINUE 3'-0" BEYOND THE RIGHT OF WAY.
5. TRANSVERSE UTILITIES SHALL BE LOCATED AWAY FROM MANHOLES, OCS FOOTINGS, AND OTHER HST SUBSURFACE ELEMENTS.
6. MINIMUM CLEARANCE FOR GAS TRANSMISSION PIPELINE CROSSING SHALL BE 10'-6" BELOW TOP OF RAIL.
7. MINIMUM CLEARANCE FOR UNDERGROUND WIRE LINE CROSSING, OVER 750 VOLTS, SHALL BE 4'-0" AND FOR GAS TRANSMISSION PIPELINE CROSSING SHALL BE 6'-0" BELOW DRAINAGE FACILITIES.
8. UTILITY MARKER TO INDICATE LOCATION OF UTILITY CROSSING AT RIGHT-OF-WAY.

RFP No. HSR 14-32 – INITIAL RELEASE - 05/27/2015

REV	DATE	BY	CHK	APP	DESCRIPTION

DESIGNED BY A. ABTAHI
DRAWN BY V. HUANTE
CHECKED BY H. NGUYEN
IN CHARGE G. LUSHEROVICH
DATE 01/24/2014

PARSONS BRINCKERHOFF

CALIFORNIA HIGH-SPEED RAIL AUTHORITY

CALIFORNIA HIGH-SPEED TRAIN PROJECT
UTILITIES DIRECTIVE

UTILITY CROSSING CLEARANCES AT GRADE

CONTRACT NO.
DRAWING NO. DD-UT-001
SCALE NO SCALE
SHEET NO.

mincio 3/28/2014 11:52:47 AM CAHSRP.tbl CHSR_half_black.plt c:\projectwise\pb\projectwise\mincio\dms32170\DD-UT-001.dgn

NOTES:

1. TRACK, SYSTEMS, DRAINAGE, AND STRUCTURES ARE SCHEMATIC AND DO NOT REPRESENT DESIGN.
2. NO UTILITIES ABOVE THE WALL FOOTINGS.
3. FOR ADDITIONAL REQUIREMENTS, SEE AREMA MANUAL.
4. TRANSVERSE UTILITIES SHALL BE LOCATED AWAY FROM MANHOLES, OCS FOOTINGS, AND OTHER HST SUBSURFACE ELEMENTS.

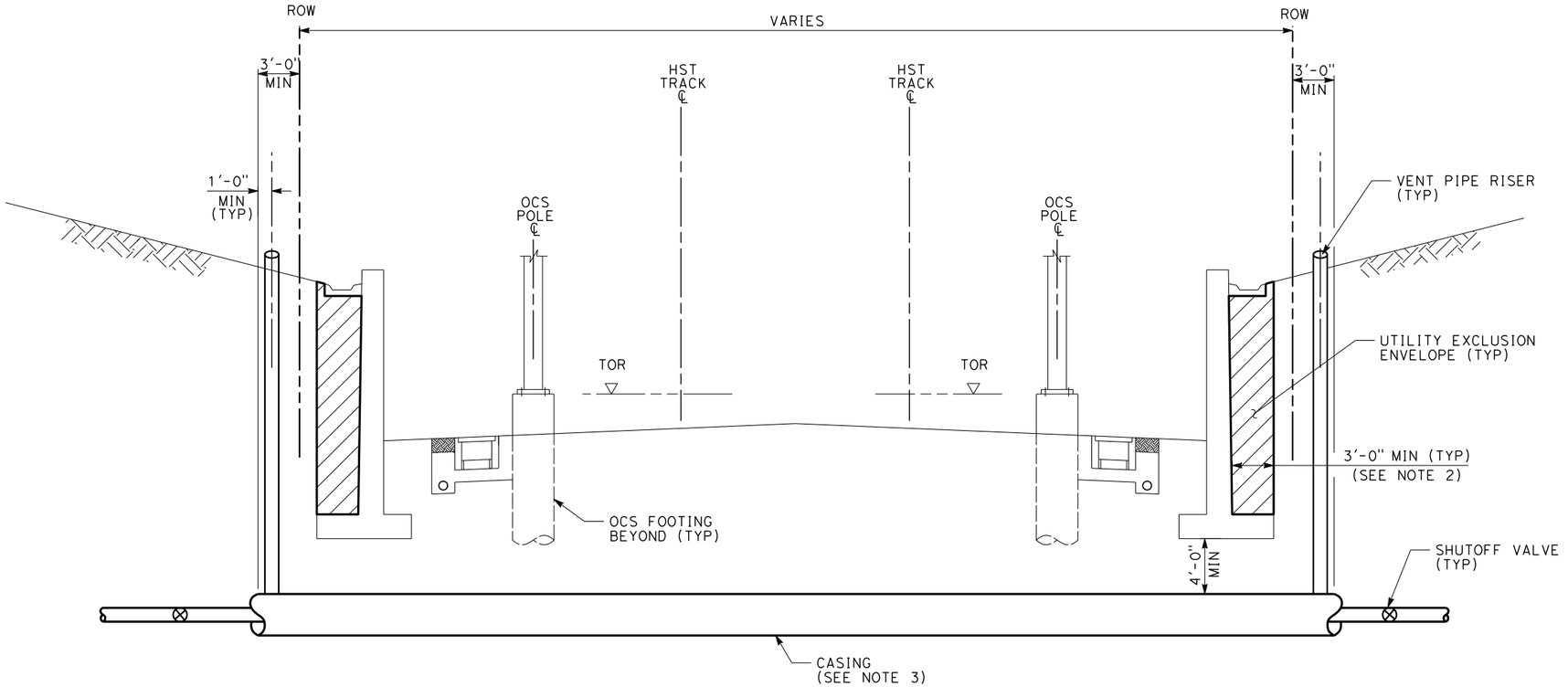

RFP No. HSR 14-32 – INITIAL RELEASE - 05/27/2015

REV	DATE	BY	CHK	APP	DESCRIPTION

DESIGNED BY: A. ABTAHI
DRAWN BY: V. HUANTE
CHECKED BY: H. NGUYEN
IN CHARGE: G. LUSHEROVICH
DATE: 01/24/2014

PARSONS BRINCKERHOFF

CALIFORNIA HIGH-SPEED RAIL AUTHORITY

CALIFORNIA HIGH-SPEED TRAIN PROJECT
UTILITIES DIRECTIVE

UTILITIES CROSSING CLEARANCES
RETAINED CUT TRENCH

CONTRACT NO.
DRAWING NO. DD-UT-002
SCALE NO SCALE
SHEET NO.

mincio 3/28/2014 11:53:57 AM CAHSRP.tbl CHSR_half_black.plt c:\projectwise\pb\projectwise\mincio\dms32170\DD-UT-002.dgn

NOTES:

1. TRACK, SYSTEMS AND DRAINAGE ARE SCHEMATIC AND DO NOT REPRESENT DESIGN.
2. AR FENCE AND ITS FOUNDATION SHALL BE INSTALLED INSIDE AUTHORITY RIGHT-OF-WAY.
3. FOR COMMON EMBANKMENT FILL ONLY, USE 2:1 SIDE SLOPES.

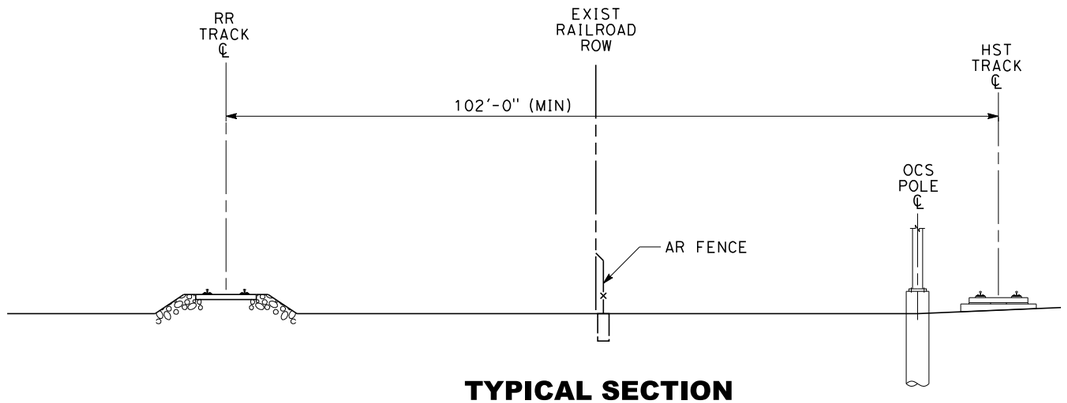

TYPICAL SECTION
102' LATERAL SEPARATION
NO INTRUSION PROTECTION REQUIRED

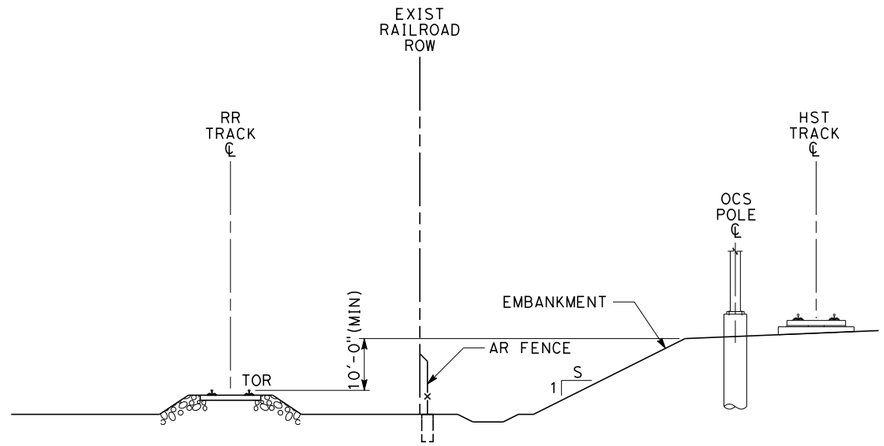

TYPICAL SECTION
MINIMUM 10' HIGH HST EMBANKMENT
NO INTRUSION PROTECTION REQUIRED

RFP No. HSR 14-32 – INITIAL RELEASE - 05/27/2015

REV	DATE	BY	CHK	APP	DESCRIPTION

DESIGNED BY: A. ABTAHI
DRAWN BY: V. HUANTE
CHECKED BY: H. NGUYEN
IN CHARGE: G. LUSHEROVICH
DATE: 05/09/2014

PARSONS BRINCKERHOFF

CALIFORNIA HIGH-SPEED RAIL AUTHORITY

CALIFORNIA HIGH-SPEED TRAIN PROJECT
INTRUSION PROTECTION DIRECTIVE

RAILROAD ADJACENT TO HST
AT-GRADE WITHOUT INTRUSION PROTECTION

CONTRACT NO.
DRAWING NO. DD-IP-100
SCALE NO SCALE
SHEET NO.

LaverdeV 5/22/2014 4:02:18 PM CAHSRP.tbl CHSR_PDF_half_black.plt c:\projectwise\pb\projectwiseint\laverdev\dms32164\DD-IP-100.dgn

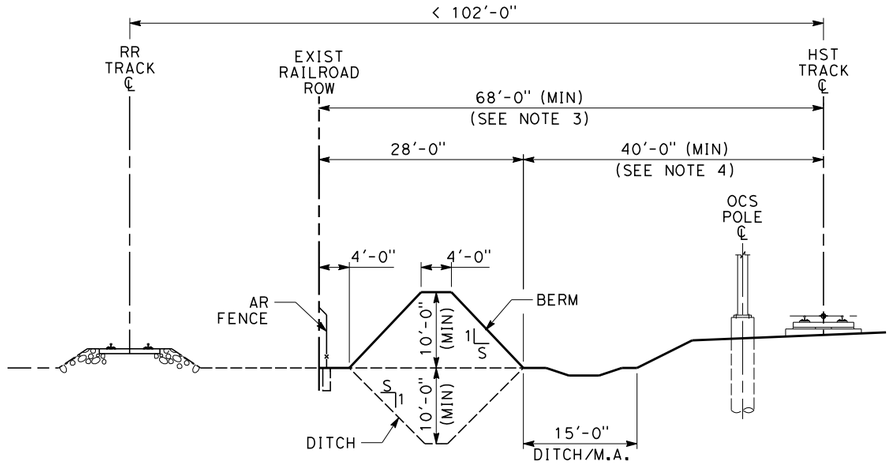

TYPICAL SECTION
EARTHEN BERM OR DITCH

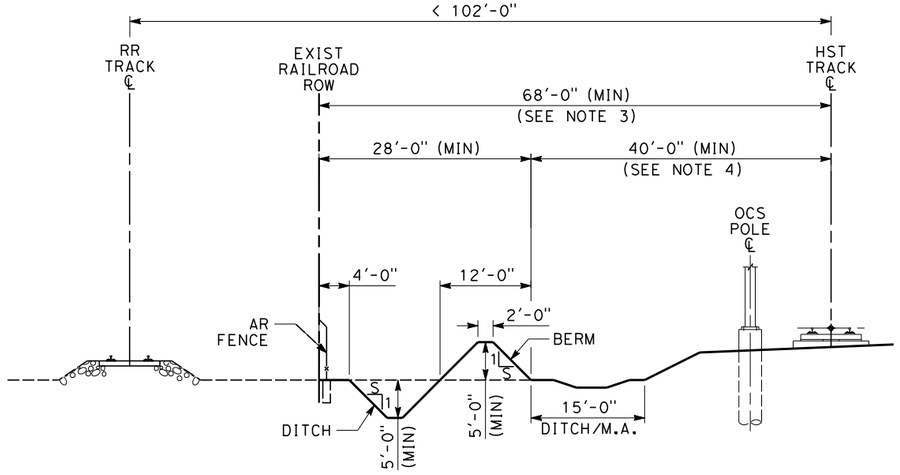

TYPICAL SECTION
EARTHEN BERM AND DITCH

NOTES:

1. TRACK, SYSTEMS AND DRAINAGE ARE SCHEMATIC AND DO NOT REPRESENT DESIGN.
2. SIDE SLOPES (S:1) DETERMINED THROUGH SLOPE STABILITY ANALYSIS. FOR COMMON EMBANKMENT FILL ONLY, USE 2:1 SIDE SLOPES.
3. MINIMUM DISTANCE IS BASED ON S=1.
4. MINIMUM DISTANCE CONSIDERS A MINIMUM OF 3'-6" HIGH EMBANKMENT, INCLUSIVE OF SUBBALLAST.
5. BERM MATERIAL AND COMPACTION SHALL BE SIMILAR TO EMBANKMENT.

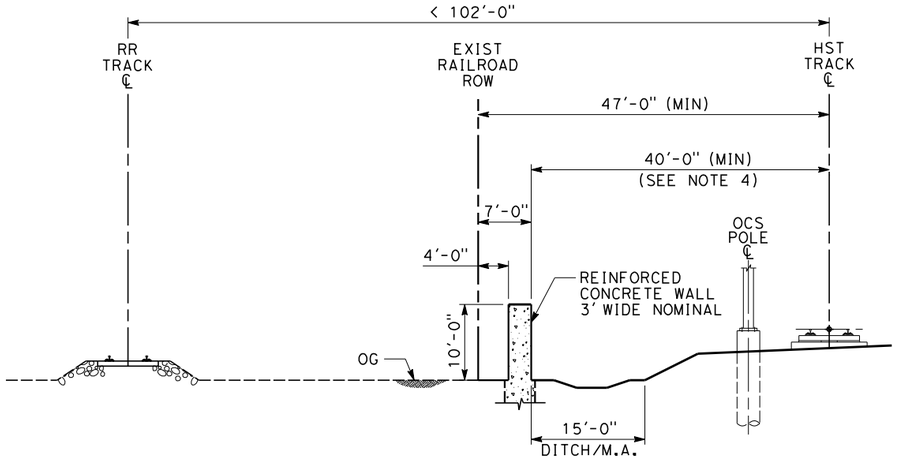

TYPICAL SECTION
CONCRETE WALL BARRIER

RFP No. HSR 14-32 – INITIAL RELEASE - 05/27/2015

REV	DATE	BY	CHK	APP	DESCRIPTION

DESIGNED BY A. ABTAHI
DRAWN BY V. HUANTE
CHECKED BY H. NGUYEN
IN CHARGE G. LUSHEROVICH
DATE 05/09/2014

PARSONS BRINCKERHOFF

CALIFORNIA HIGH-SPEED RAIL AUTHORITY

CALIFORNIA HIGH-SPEED TRAIN PROJECT
INTRUSION PROTECTION DIRECTIVE

RAILROAD ADJACENT TO HST
AT-GRADE WITH INTRUSION PROTECTION

CONTRACT NO.
DRAWING NO. DD-IP-101
SCALE NO SCALE
SHEET NO.

LoverdeV 5/21/2014 4:45:16 PM CAHSRP.tbl CHSR_PDF_half_black.plt c:\projectwise\pb\projectwiseint\loverdev\dms32164\DD-IP-101.dgn

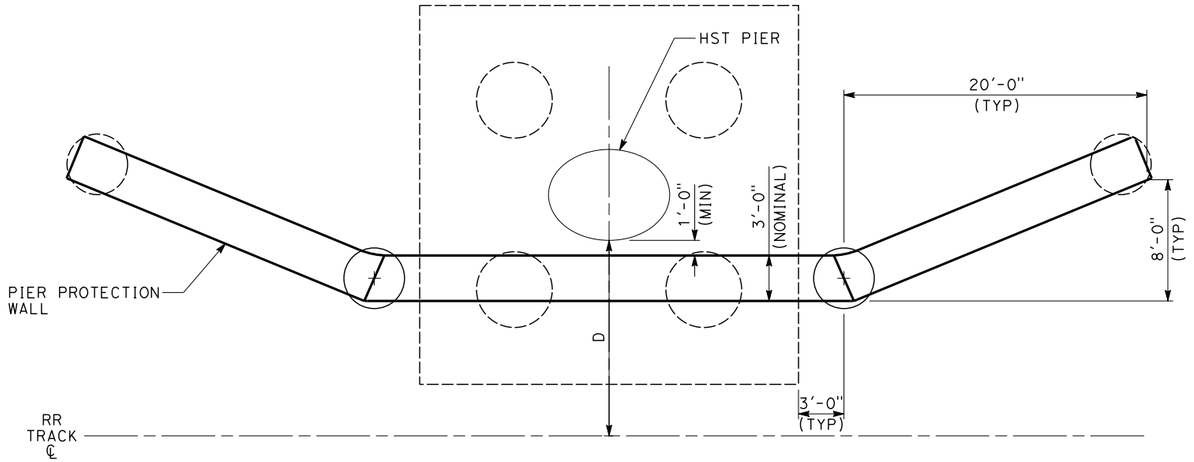

PLAN

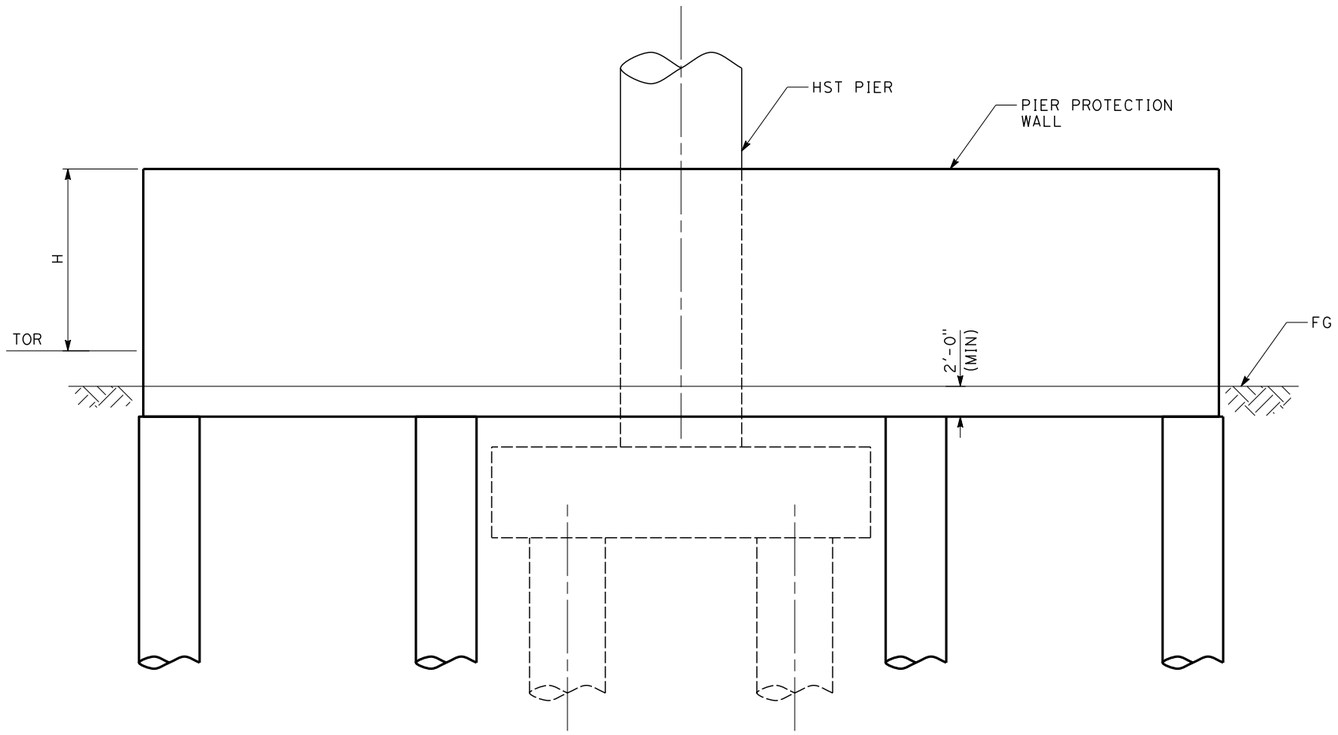

ELEVATION

NOTES:

1. TRACK, SYSTEMS AND DRAINAGE ARE SCHEMATIC AND DO NOT REPRESENT DESIGN.
2. PIER PROTECTION WALL IS REQUIRED IF CLEARANCE FROM FACE OF HST STRUCTURE TO NEAREST RAILROAD TRACK CENTERLINE IS LESS THAN 25'-0".
3. LOCATION WHERE PIER PROTECTION WALL IS REQUIRED SHALL BE DETERMINED THROUGH SITE SPECIFIC HAZARD ANALYSES.

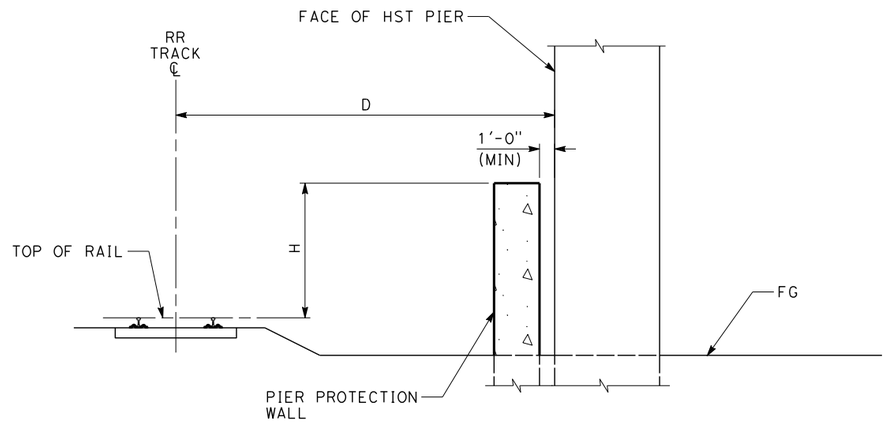

HST STRUCTURE PIER - PROTECTION WALL

CLEARANCE (D)	WALL HEIGHT ABOVE TOP OF RAIL (H)
≥ 25 FT	N/A
12 FT - 25 FT	6 FT
≤ 12 FT	12 FT

RFP No. HSR 14-32 – INITIAL RELEASE - 05/27/2015

REV	DATE	BY	CHK	APP	DESCRIPTION

DESIGNED BY: A. ABTAHI
DRAWN BY: V. HUANTE
CHECKED BY: H. NGUYEN
IN CHARGE: G. LUSHEROVICH
DATE: 01/24/2014

PARSONS BRINCKERHOFF

CALIFORNIA HIGH-SPEED RAIL AUTHORITY

CALIFORNIA HIGH-SPEED TRAIN PROJECT
INTRUSION PROTECTION DIRECTIVE

HST PIER PROTECTION
IN RAILROAD RIGHT OF WAY

CONTRACT NO.
DRAWING NO. DD-IP-102
SCALE NO SCALE
SHEET NO.

mincio 3/30/2014 11:31:13 AM CAHSRP.tbl CHSR_half_black.plt c:\projectwise\pbprojectwiseint\mincio\dms32164\DD-IP-102.dgn

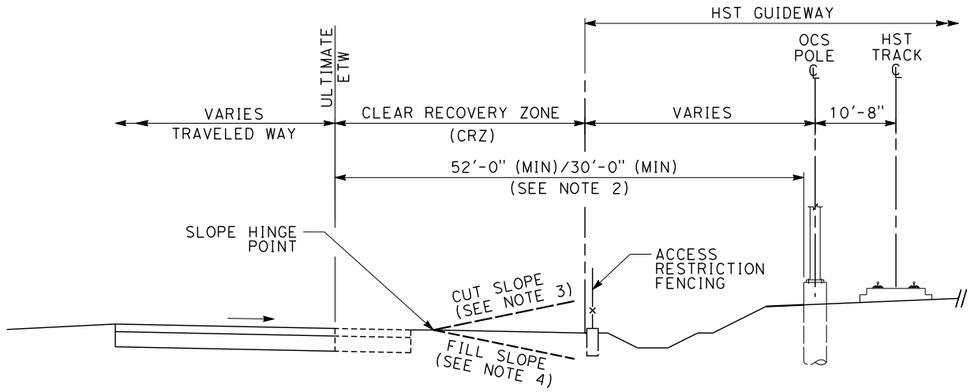

HST AT GRADE ADJACENT TO HIGHWAY/ROADWAY

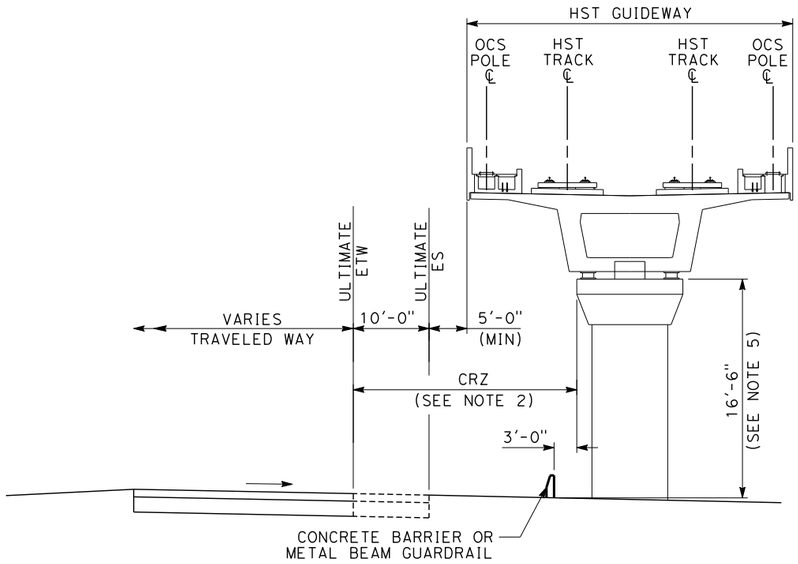

HST AERIAL STRUCTURE ADJACENT TO HIGHWAY/ROADWAY

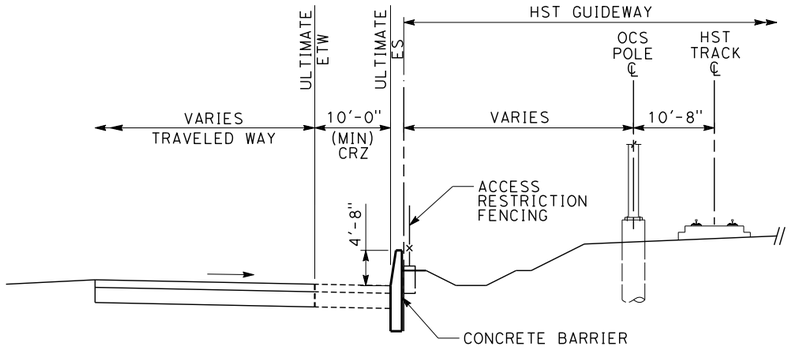

HST AT GRADE ADJACENT TO HIGHWAY/ROADWAY

WITH 10 FEET CLEAR RECOVERY ZONE (CRZ)

NOTES:

1. TRACK, SYSTEMS AND DRAINAGE ARE SCHEMATIC AND DO NOT REPRESENT DESIGN.
2. WHEN HST CORRIDOR IS CONSTRUCTED LONGITUDINALLY TO A FREEWAY, EXPRESSWAY, OR HIGHWAY, METAL BEAM GUARDRAIL OR CONCRETE BARRIER SHALL BE REQUIRED AT HST FIXED OBJECT IF THE DISTANCE FROM ULTIMATE ETW TO HST AERIAL STRUCTURE COLUMN, OR ANY HST FIXED OBJECT IS LESS THAN 52'-0". IF HST CORRIDOR IS NOT LONGITUDINAL TO A FREEWAY, EXPRESSWAY, OR HIGHWAY, THE CLEARANCE REQUIREMENT TO A HST FIXED OBJECT IS 30'-0".
3. IF HEIGHT DIFFERENTIAL AT ROADWAY CUT SLOPE HINGE POINT AND HST ROW FENCE IS GREATER THAN 7'-0", NO GUARDRAIL OR CONCRETE BARRIER IS REQUIRED.
4. IF THE HEIGHT DIFFERENTIAL AT ROADWAY FILL HINGE POINT AND HST ROW FENCE IS GREATER THAN 10'-0", GUARDRAIL WILL BE REQUIRED AT ROADWAY FILL HINGE POINT.
5. IF THE VERTICAL CLEARANCE BETWEEN THE RECOVERY AREA AND THE HST STRUCTURE BENT CAP IS LESS THAN 16'-6", METAL BEAM GUARDRAIL OR CONCRETE BARRIER WILL BE REQUIRED 3'-0" FROM EDGE OF HST BENT CAP.

RFP No. HSR 14-32 – INITIAL RELEASE - 05/27/2015

REV	DATE	BY	CHK	APP	DESCRIPTION

DESIGNED BY A. ABTAHI
DRAWN BY V. HUANTE
CHECKED BY H. NGUYEN
IN CHARGE G. LUSHEROVICH
DATE 01/24/2014

PARSONS BRINCKERHOFF

CALIFORNIA HIGH-SPEED RAIL AUTHORITY

CALIFORNIA HIGH-SPEED TRAIN PROJECT
INTRUSION PROTECTION DIRECTIVE

HST ADJACENT TO HIGHWAY/ROADWAY

CONTRACT NO.
DRAWING NO. DD-IP-103
SCALE NO SCALE
SHEET NO.

mincio 3/30/2014 11:31:58 AM CAHSRP.tbl CHSR_half_black.plt c:\projectwise\pb\projectwiseint\mincio\dms32164\DD-IP-103.dgn

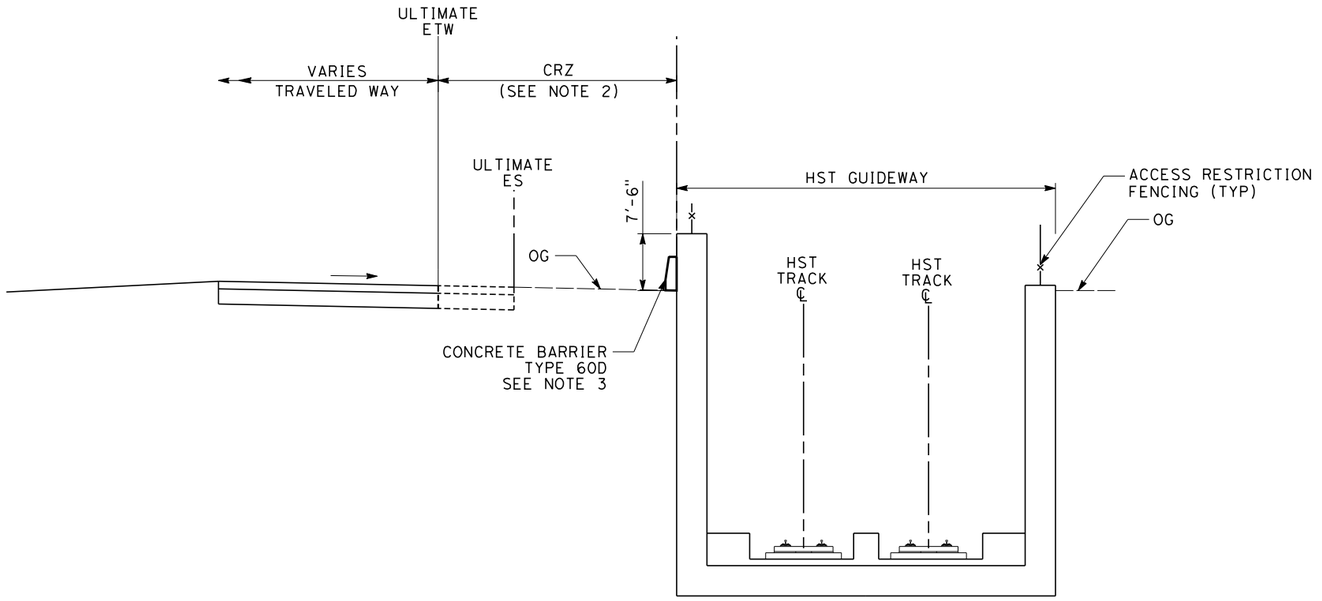

HIGHWAY/ROADWAY AT GRADE ADJACENT TO HST TRENCH

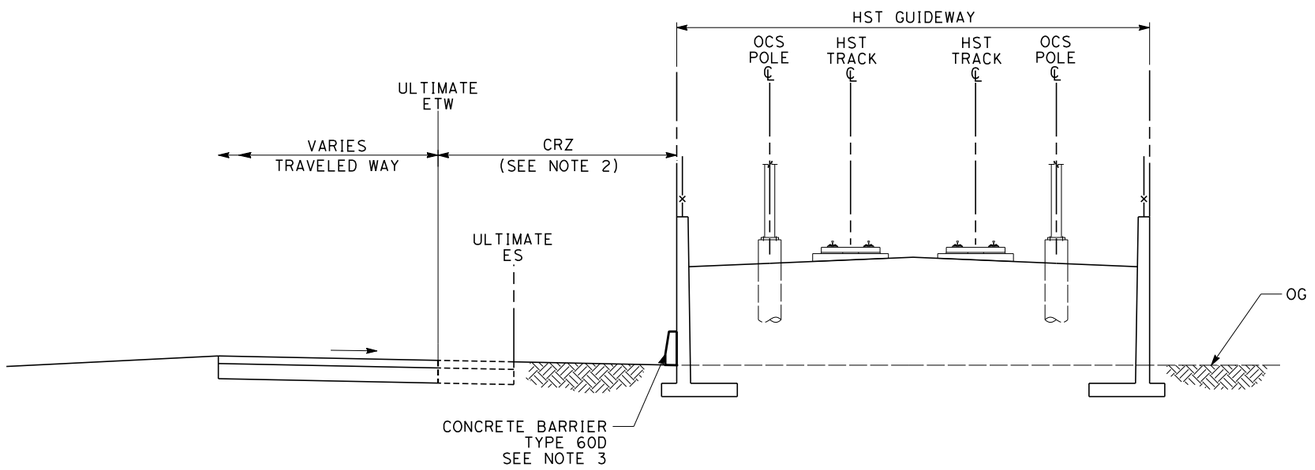

HIGHWAY/ROADWAY AT GRADE ADJACENT TO HST RETAINED FILL

NOTES:

1. TRACK, SYSTEMS AND DRAINAGE ARE SCHEMATIC AND DO NOT REPRESENT DESIGN.
2. IF THE DISTANCE BETWEEN HST WALL AND THE ULTIMATE ETW IS LESS THAN 52'-0", THE WALL HEIGHT SHALL BE 7'-6" ABOVE THE GROUND SURFACE AND CALTRANS CONCRETE BARRIER TYPE 60D SHALL BE INCLUDED IN CONSTRUCTION OF THE WALL.
3. FOR CONCRETE BARRIER TYPE AND THE END TREATMENT OF THE CONCRETE BARRIER REFER TO CHAPTER 7 OF CALTRANS TRAFFIC MANUAL AND CALTRANS STANDARD PLANS.

RFP No. HSR 14-32 – INITIAL RELEASE - 05/27/2015

REV	DATE	BY	CHK	APP	DESCRIPTION

DESIGNED BY: A. ABTAHI
DRAWN BY: V. HUANTE
CHECKED BY: H. NGUYEN
IN CHARGE: G. LUSHEROVICH
DATE: 08/29/2014

PARSONS BRINCKERHOFF

CALIFORNIA HIGH-SPEED RAIL AUTHORITY

CALIFORNIA HIGH-SPEED TRAIN PROJECT
INTRUSION PROTECTION DIRECTIVE

HST TRENCH AND RETAINING WALL PROTECTION

CONTRACT NO.
DRAWING NO. DD-IP-104
SCALE NO SCALE
SHEET NO.

LaverdeV 9/30/2014 11:29:32 AM CAHSRP.tbl CHSR_PDF_half_black.plt c:\projectwise\pb\projectwiseint\laverdev\dms32164\DD-IP-104.dgn

NOTES:

1. METAL BEAM GUARDRAIL OR CONCRETE BARRIER SHALL BE REQUIRED AT HST FIXED OBJECT IF THE DISTANCE FROM ULTIMATE ETW TO HST FIXED OBJECT IS LESS THAN 30'-0". REFER TO CHAPTER 7 OF CALTRANS TRAFFIC MANUAL AND CALTRANS STANDARD PLANS.

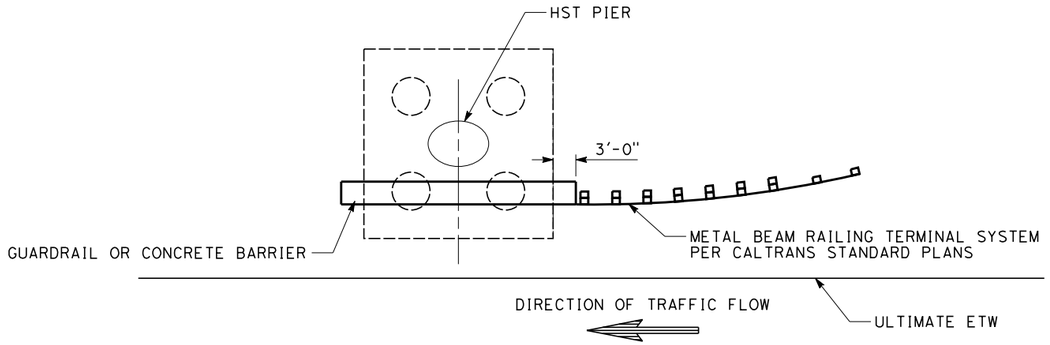

PLAN

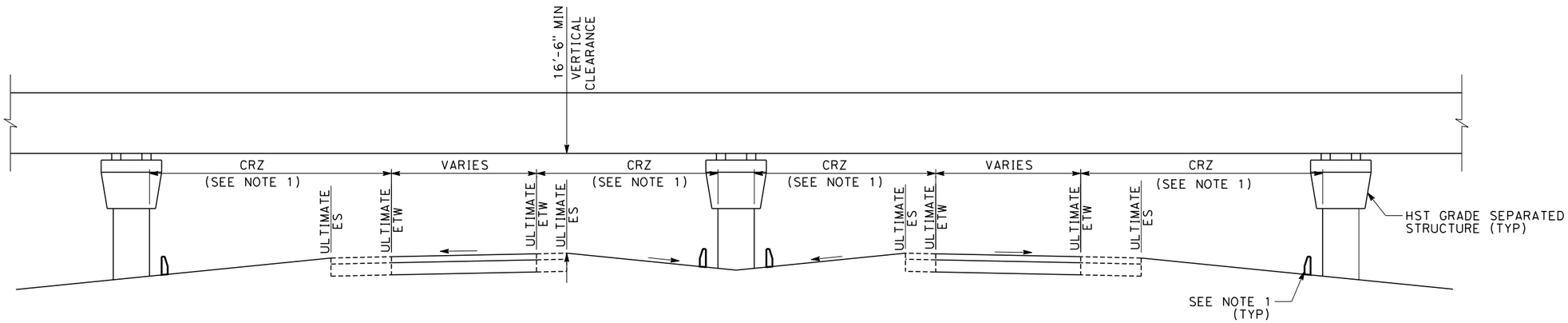

HST GRADE SEPARATED STRUCTURE OVER HIGHWAY/ROADWAY WITH MEDIAN

RFP No. HSR 14-32 – INITIAL RELEASE - 05/27/2015

REV	DATE	BY	CHK	APP	DESCRIPTION

DESIGNED BY: A. ABTAHI
DRAWN BY: V. HUANTE
CHECKED BY: H. NGUYEN
IN CHARGE: G. LUSHEROVICH
DATE: 08/29/2014

PARSONS BRINCKERHOFF

CALIFORNIA HIGH-SPEED RAIL AUTHORITY

CALIFORNIA HIGH-SPEED TRAIN PROJECT
INTRUSION PROTECTION DIRECTIVE

HST PIER PROTECTION
IN HIGHWAY/ROADWAY RIGHT-OF-WAY

CONTRACT NO.
DRAWING NO. DD-IP-105
SCALE NO SCALE
SHEET NO.

LaverdeV 9/30/2014 11:30:51 AM CAHSRP.tbl CHSR_PDF_half_black.plt c:\projectwise\pb\projectwiseint\laverdev\dms32164\DD-IP-105.dgn

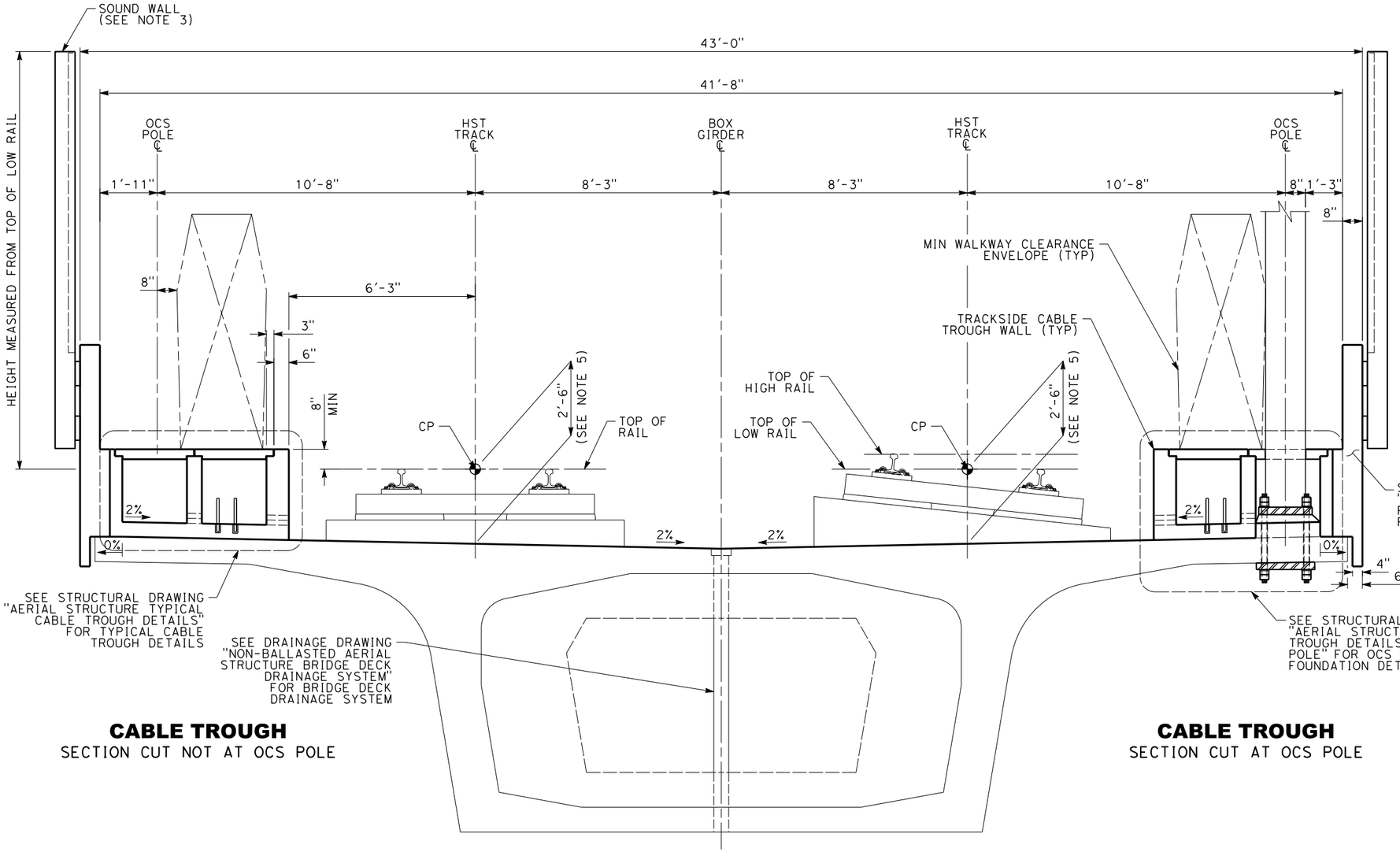

CABLE TROUGH
SECTION CUT NOT AT OCS POLE

CABLE TROUGH
SECTION CUT AT OCS POLE

FOR TANGENT TRACK **FOR SUPERELEVATED TRACK**

2 0 2 4
1/2"=1'-0"

NOTES:

1. TRACK, SYSTEMS AND DRAINAGE ARE SCHEMATIC AND DO NOT REPRESENT DESIGN.
2. ON CURVED ALIGNMENT, THE RELATIVE DIMENSIONS BETWEEN BRIDGE DECK AND BOX GIRDER SHALL BE ADJUSTED PROPERLY. IF A STRAIGHT DECK EDGE IS SELECTED, THE WIDER DECK WIDTH MAY BE REQUIRED.
3. THE HEIGHT OF SOUND WALLS SHALL BE AS DEFINED IN THE TABLE 12-1 OF THE DESIGN CRITERIA. THE STRUCTURE AND CONNECTION BETWEEN PARAPET AND STRUCTURE DECK SHALL BE DESIGNED TO RESIST THE LOAD COMBINATIONS AS DESCRIBED IN TABLE 12-4 OF THE DESIGN CRITERIA TO ACCOMMODATE INSTALLATION OF SOUND WALLS. NO LONGITUDINAL GAPS SHALL BE PERMITTED BETWEEN THE BOTTOM OF SOUND WALL AND THE PARAPET OR DECK, NOR ANY VERTICAL GAPS BETWEEN ADJACENT SOUND WALL PANELS.
4. THE DIRECT FIXATION RAIL SYSTEM AND THE TRACK SLAB SHOWN ARE FOR ILLUSTRATION ONLY. THE CONTRACTOR SHALL DESIGN AND INSTALL SHEAR REINFORCEMENTS OR CONNECTORS, WHICH ARE CAPABLE OF TRANSFERRING THE TRACTION OR BRAKING FORCES AS DESCRIBED IN THE STRUCTURES CHAPTER OF THE DESIGN CRITERIA, IN THE STRUCTURAL DECK BELOW THE TRACK SLAB IN ACCORDANCE WITH THE PROVISIONS PROVIDED BY THE TRACK WORK DESIGNER THROUGH SYSTEM INTERFACE WORKSHOP MEETINGS. THE TOP SURFACE OF STRUCTURAL DECK BELOW THE TRACK SLAB SHALL BE PROPERLY ROUGHENED BY THE CONTRACTOR. SHEAR REINFORCEMENTS OR CONNECTORS SHALL BE HOT-DIP GALVANIZED. THE DESIGN AND INSTALLATION OF SHEAR REINFORCEMENTS OR CONNECTORS SHALL BE CONSIDERED AS PART OF THE CONTRACTOR'S SCOPE OF WORK.
5. FOR BALLASTED STRUCTURES, THE DESIGN DEPTH FROM TOP OF RAIL TO THE STRUCTURE DECK OR INVERT SHALL BE SET EQUAL TO 2'-9" PLUS ALLOWANCE FOR WATER PROOFING MEMBRANE AND PROTECTION LAYER.

RFP No. HSR 14-32 – INITIAL RELEASE - 05/27/2015

REV	DATE	BY	CHK	APP	DESCRIPTION

DESIGNED BY P. LIN
DRAWN BY V. HUANTE
CHECKED BY K. PUGASAP
IN CHARGE G. LUSHEROVICH
DATE 07/18/2014

PARSONS BRINCKERHOFF

CALIFORNIA HIGH-SPEED RAIL AUTHORITY

CALIFORNIA HIGH-SPEED TRAIN PROJECT
STRUCTURAL DIRECTIVE
TYPICAL CROSS SECTION
AERIAL STRUCTURE
TWO TRACK NON-BALLASTED
TYPICAL CONFIGURATION ON TOP OF DECK

CONTRACT NO.
DRAWING NO. DD-ST-100
SCALE AS SHOWN
SHEET NO.

Mincio 7/30/2014 11:40:27 AM CAHSRP.tbl CHSR_half_black.plt c:\projectwise\pb\projectwiseint\mincio\dms32172\DD-ST-100.dgn

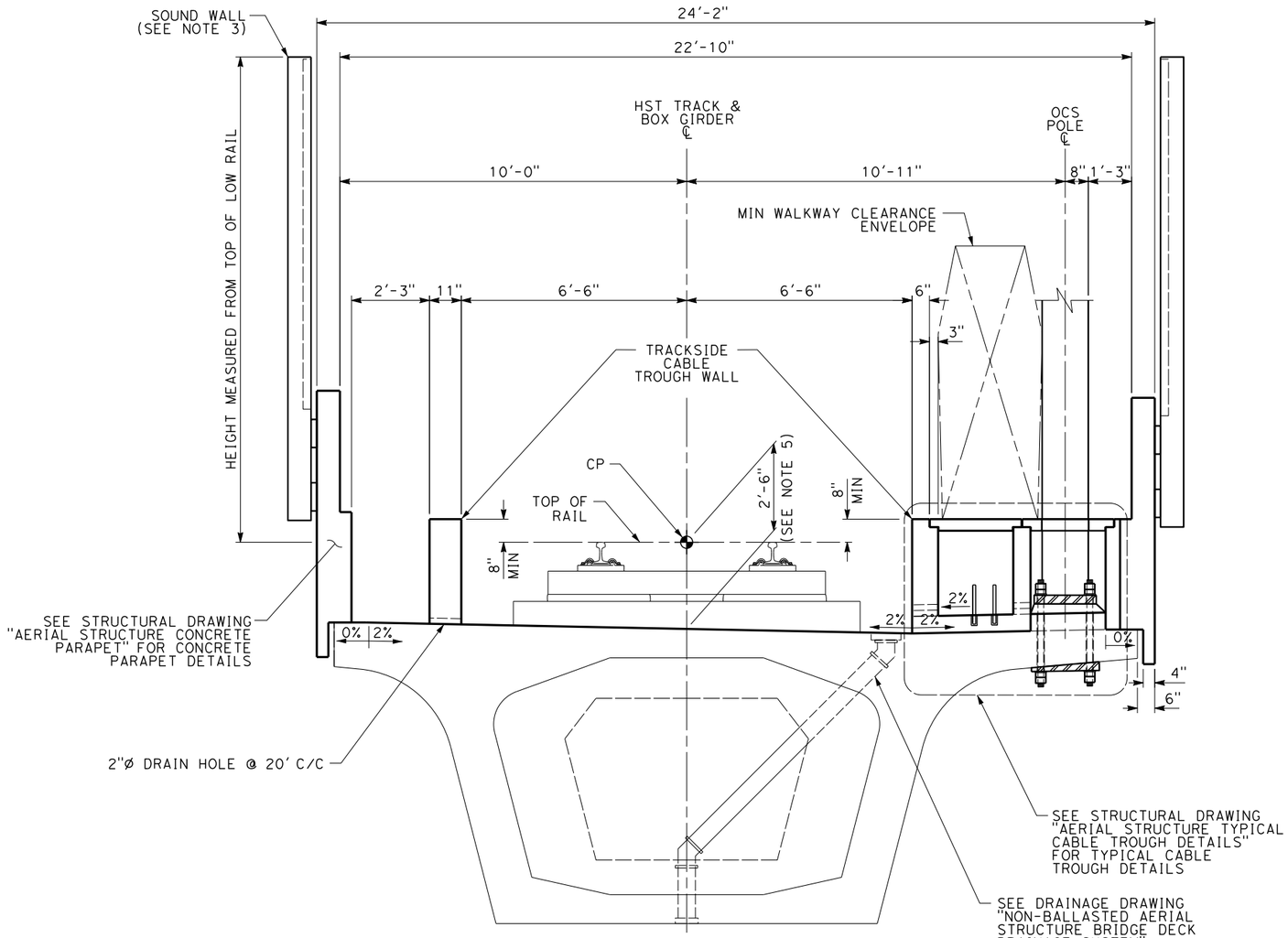

TANGENT TRACK
SECTION CUT AT OCS POLE (SHOWN)
SUPERELEVATED TRACK (SIMILAR)

2 0 2 4
1/2"=1'-0"

NOTES:

1. TRACK, SYSTEMS AND DRAINAGE ARE SCHEMATIC AND DO NOT REPRESENT DESIGN.
2. ON CURVED ALIGNMENT, THE RELATIVE DIMENSIONS BETWEEN BRIDGE DECK AND BOX GIRDER SHALL BE ADJUSTED PROPERLY. IF A STRAIGHT DECK EDGE IS SELECTED, THE WIDER DECK WIDTH MAY BE REQUIRED.
3. THE HEIGHT OF SOUND WALLS SHALL BE AS DEFINED IN THE TABLE 12-1 OF THE DESIGN CRITERIA. THE STRUCTURE AND CONNECTION BETWEEN PARAPET AND STRUCTURE DECK SHALL BE DESIGNED TO RESIST THE LOAD COMBINATIONS AS DESCRIBED IN TABLE 12-4 OF THE DESIGN CRITERIA TO ACCOMMODATE INSTALLATION OF SOUND WALLS. NO LONGITUDINAL GAPS SHALL BE PERMITTED BETWEEN THE BOTTOM OF SOUND WALL AND THE PARAPET OR DECK, NOR ANY VERTICAL GAPS BETWEEN ADJACENT SOUND WALL PANELS.
4. THE DIRECT FIXATION RAIL SYSTEM AND THE TRACK SLAB SHOWN ARE FOR ILLUSTRATION ONLY. THE CONTRACTOR SHALL DESIGN AND INSTALL SHEAR REINFORCEMENTS OR CONNECTORS, WHICH ARE CAPABLE OF TRANSFERRING THE TRACTION OR BRAKING FORCES AS DESCRIBED IN THE STRUCTURES CHAPTER OF THE DESIGN CRITERIA, IN THE STRUCTURAL DECK BELOW THE TRACK SLAB IN ACCORDANCE WITH THE PROVISIONS PROVIDED BY THE TRACK WORK DESIGNER THROUGH SYSTEM INTERFACE WORKSHOP MEETINGS. THE TOP SURFACE OF STRUCTURAL DECK BELOW THE TRACK SLAB SHALL BE PROPERLY ROUGHENED BY THE CONTRACTOR. SHEAR REINFORCEMENTS OR CONNECTORS SHALL BE HOT-DIP GALVANIZED. THE DESIGN AND INSTALLATION OF SHEAR REINFORCEMENTS OR CONNECTORS SHALL BE CONSIDERED AS PART OF THE CONTRACTOR'S SCOPE OF WORK.
5. FOR BALLASTED STRUCTURES, THE DESIGN DEPTH FROM TOP OF RAIL TO THE STRUCTURE DECK OR INVERT SHALL BE SET EQUAL TO 2'-9" PLUS ALLOWANCE FOR WATER PROOFING MEMBRANE AND PROTECTION LAYER.

RFP No. HSR 14-32 – INITIAL RELEASE - 05/27/2015

REV	DATE	BY	CHK	APP	DESCRIPTION

DESIGNED BY: P. LIN
DRAWN BY: V. HUANTE
CHECKED BY: K. PUGASAP
IN CHARGE: G. LUSHEROVICH
DATE: 07/18/2014

PARSONS BRINCKERHOFF

CALIFORNIA HIGH-SPEED RAIL AUTHORITY

CALIFORNIA HIGH-SPEED TRAIN PROJECT
STRUCTURAL DIRECTIVE
TYPICAL CROSS SECTION
AERIAL STRUCTURE
ONE TRACK NON-BALLASTED
TYPICAL CONFIGURATION ON TOP OF DECK

CONTRACT NO.
DRAWING NO. DD-ST-101
SCALE AS SHOWN
SHEET NO.

Mincio 8/1/2014 10:17:31 AM CAHSRP-AD.tbEHSR_half_black.plt c:\projectwise\pb\projectwiseint\mincio\dms32172\DD-ST-101.dgn

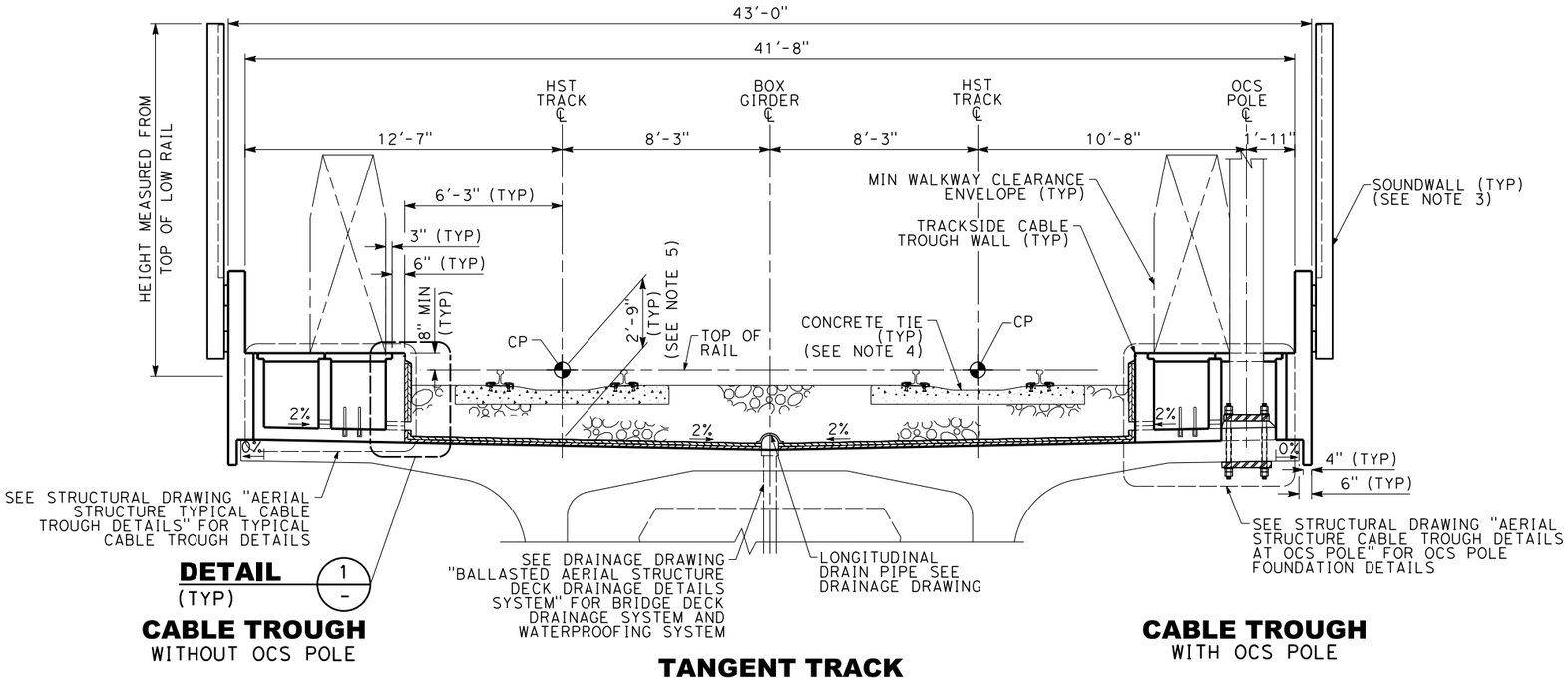

DETAIL 1/- (TYP)

CABLE TROUGH
WITHOUT OCS POLE

CABLE TROUGH
WITH OCS POLE

TANGENT TRACK

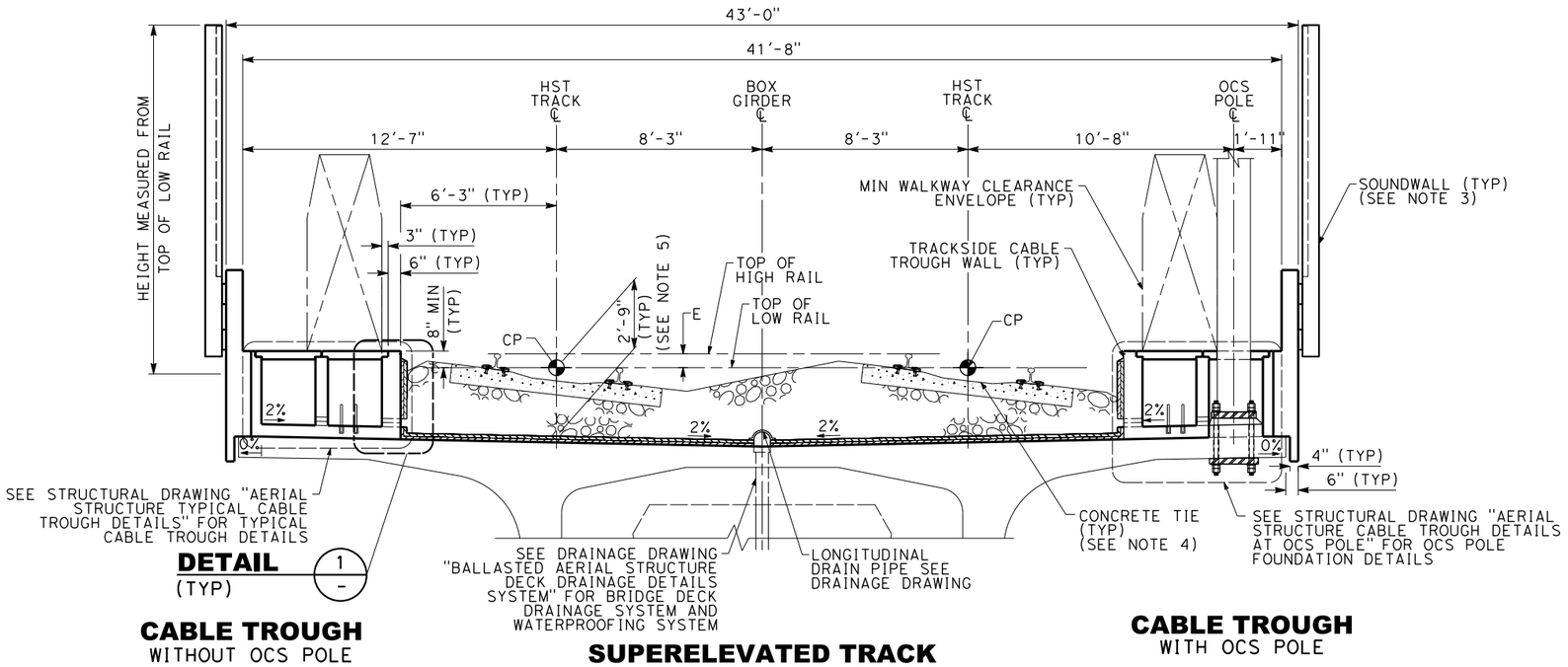

DETAIL 1/- (TYP)

CABLE TROUGH
WITHOUT OCS POLE

CABLE TROUGH
WITH OCS POLE

SUPERELEVATED TRACK

NOTES:

1. TRACK, SYSTEMS AND DRAINAGE ARE SCHEMATIC AND DO NOT REPRESENT DESIGN.
2. ON CURVED ALIGNMENT, THE RELATIVE DIMENSIONS BETWEEN BRIDGE DECK AND BOX GIRDER SHALL BE ADJUSTED PROPERLY. IF A STRAIGHT DECK EDGE IS SELECTED, THE WIDER DECK WIDTH MAY BE REQUIRED.
3. THE HEIGHT OF SOUND WALLS SHALL BE AS DEFINED IN THE TABLE 12-1 OF THE DESIGN CRITERIA. THE STRUCTURE AND CONNECTION BETWEEN PARAPET AND STRUCTURE DECK SHALL BE DESIGNED TO RESIST THE LOAD COMBINATIONS AS DESCRIBED IN TABLE 12-4 OF THE DESIGN CRITERIA TO ACCOMMODATE INSTALLATION OF SOUND WALLS. NO LONGITUDINAL GAPS SHALL BE PERMITTED BETWEEN THE BOTTOM OF SOUND WALL AND THE PARAPET OR DECK, NOR ANY VERTICAL GAPS BETWEEN ADJACENT SOUND WALL PANELS.
4. CONCRETE TIES SHOWN ARE FOR ILLUSTRATION ONLY.
5. FOR BALLASTED STRUCTURES, THE DESIGN DEPTH FROM TOP OF RAIL TO THE STRUCTURE DECK OR INVERT SHALL BE SET EQUAL TO 2'-9" PLUS ALLOWANCE FOR WATER PROOFING MEMBRANE AND PROTECTION LAYER.

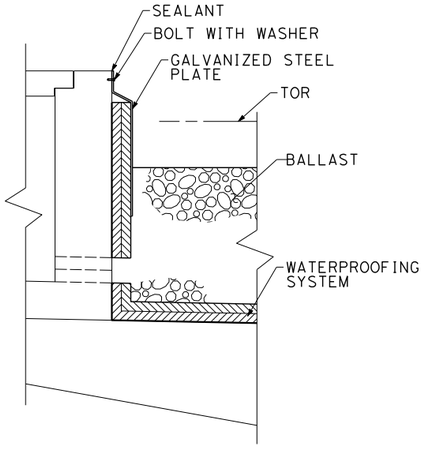

1/- **WATERPROOFING SYSTEM**
ON CONCRETE DECK

RFP No. HSR 14-32 – INITIAL RELEASE - 05/27/2015

REV	DATE	BY	CHK	APP	DESCRIPTION

DESIGNED BY P. LIN
DRAWN BY V. HUANTE
CHECKED BY G. HARRIS
IN CHARGE G. LUSHEROVICH
DATE 07/18/2014

PARSONS BRINCKERHOFF

CALIFORNIA HIGH-SPEED RAIL AUTHORITY

CALIFORNIA HIGH-SPEED TRAIN PROJECT
STRUCTURAL DIRECTIVE
TYPICAL CROSS SECTION
AERIAL STRUCTURE
TWO TRACK BALLASTED
TYPICAL CONFIGURATION ON TOP OF DECK

CONTRACT NO.
DRAWING NO. DD-ST-102
SCALE NO SCALE
SHEET NO.

Mincio 8/1/2014 10:22:04 AM CAHSRP-AD.tbl CHSR_half_black.plt c:\projectwise\pb\projectwiseint\mincio\dms32172\DD-ST-102.dgn

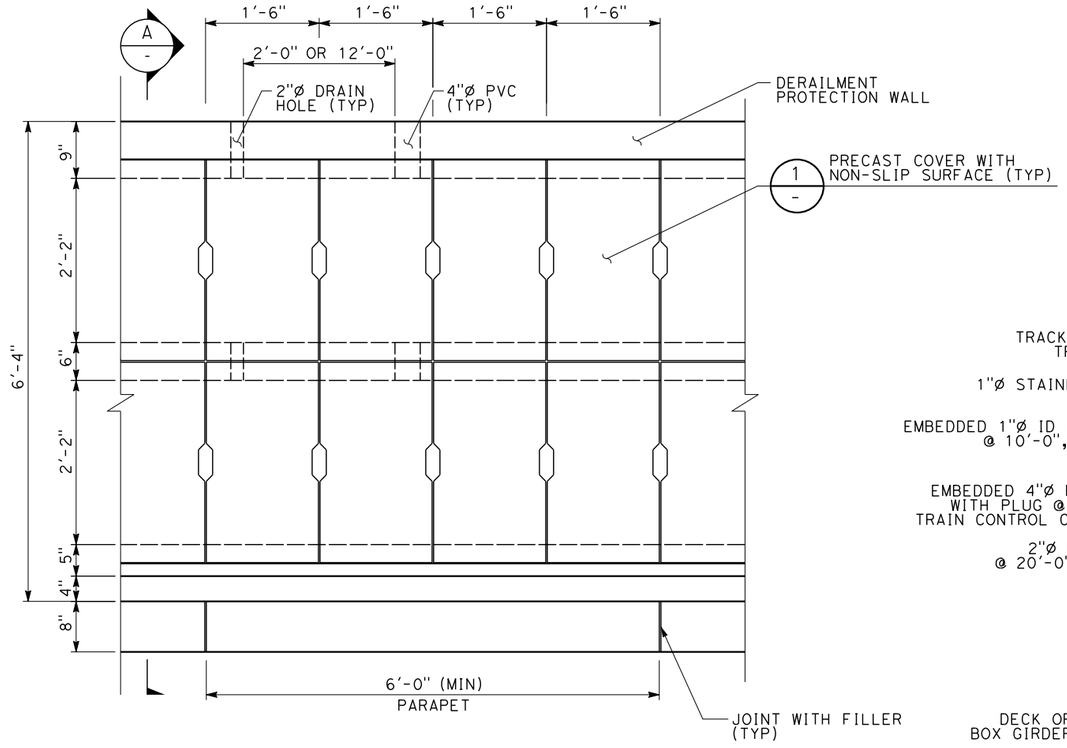

CABLE TROUGH PLAN
SCALE: 1"=1'-0"

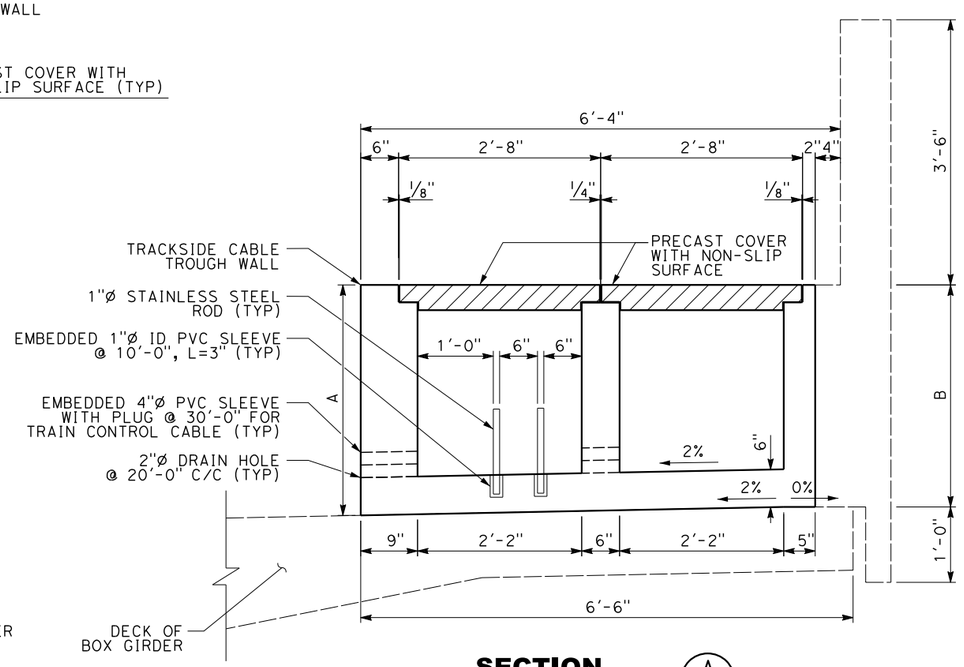

SECTION A
SCALE: 1"=1'-0"

NOTES:

1. TRACK, SYSTEMS AND DRAINAGE ARE SCHEMATIC AND DO NOT REPRESENT DESIGN.
2. THE CABLE TROUGH DETAIL IS FOR STANDARD TWO TRACK. FOR CABLE TROUGH INFORMATION IN SPECIAL TRACK AREA, THE CONTRACTOR SHALL COORDINATE WITH THE INTERFACED TRACK WORK DESIGNER FOR DETAILED INFORMATION.

	NON-BALLASTED TRACK		BALLASTED TRACK	
	TWO TRACK	ONE TRACK	TWO TRACK	ONE TRACK
A	3'-1/2"	3'-3 9/16"	3'-3 1/2" + T*	3'-6 9/16" + T*
B	2'-11 1/8"	3'-2 1/4"	2'-2 1/8" + T*	3'-5 1/4" + T*

T* = SUM OF WATERPROOFING MEMBRANE THICKNESS AND PROTECTION LAYER THICKNESS

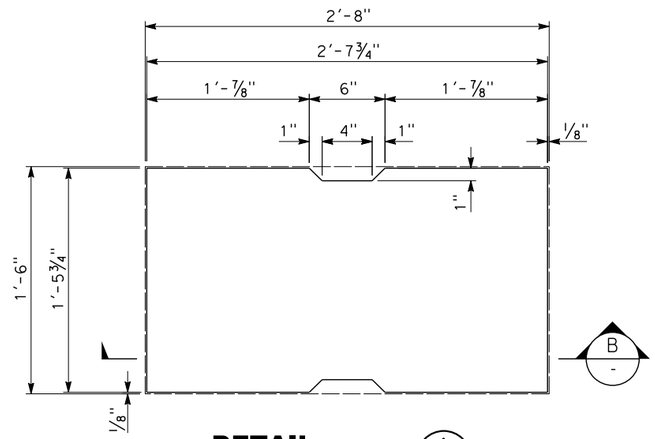

DETAIL 1
SCALE: 1/2"=1'-0"

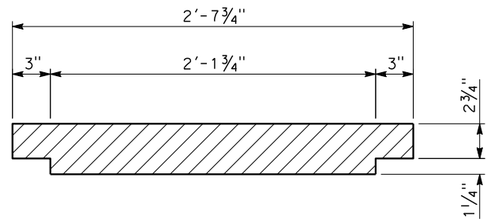

SECTION B
SCALE: 1/2"=1'-0"

REV	DATE	BY	CHK	APP	DESCRIPTION

DESIGNED BY P. LIN
DRAWN BY V. HUANTE
CHECKED BY K. PUGASAP
IN CHARGE G. LUSHEROVICH
DATE 01/24/2014

PARSONS BRINCKERHOFF

CALIFORNIA HIGH-SPEED RAIL AUTHORITY

CALIFORNIA HIGH-SPEED TRAIN PROJECT
STRUCTURAL DIRECTIVE

AERIAL STRUCTURE
TYPICAL CABLE TROUGH DETAILS

CONTRACT NO.
DRAWING NO. DD-ST-900
SCALE AS SHOWN
SHEET NO.

RFP No. HSR 14-32 – INITIAL RELEASE - 05/27/2015

mincio 3/30/2014 11:38:40 AM CAHSRP.tbl CHSR_half_black.plt c:\projectwise\pb\projectwiseint\mincio\dms32172\DD-ST-900.dgn

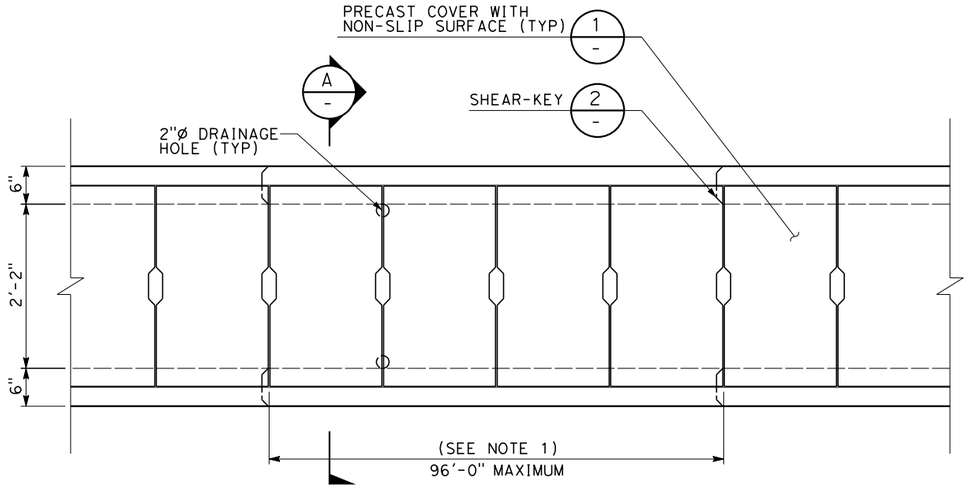

PRECAST CABLE TROUGH PLAN
SCALE: 1"=1'-0"

NOTES:

1. CONTRACTOR SHALL DETERMINE WORK SEGMENT LENGTH BASED ON CONSTRUCTION METHOD.

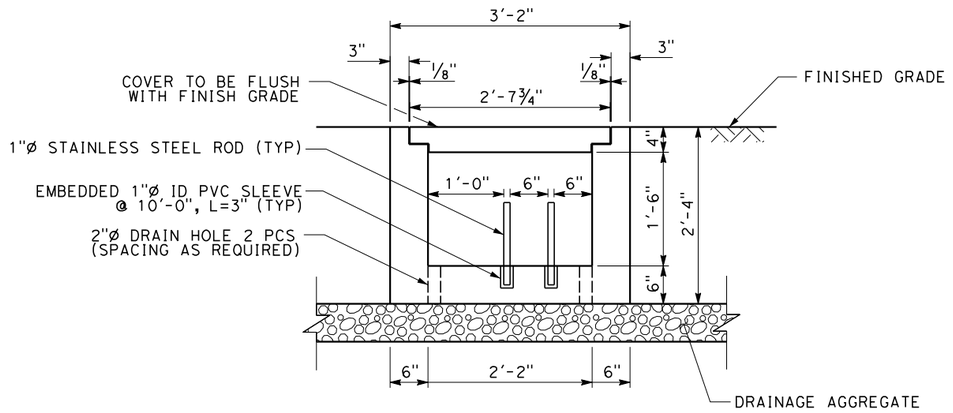

SECTION A
SCALE: 1"=1'-0"

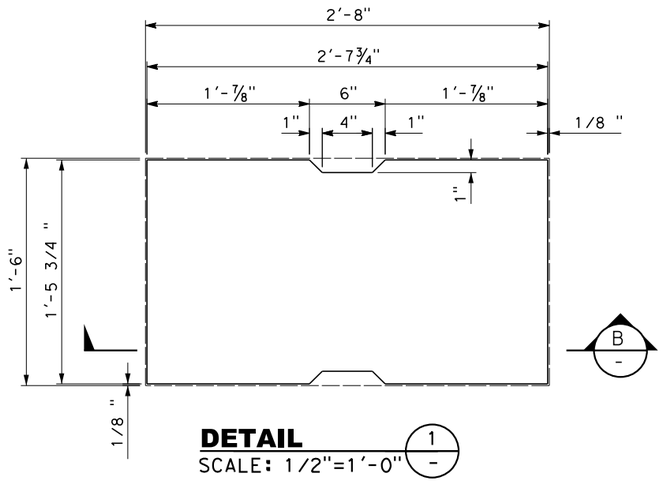

DETAIL 1
SCALE: 1/2"=1'-0"

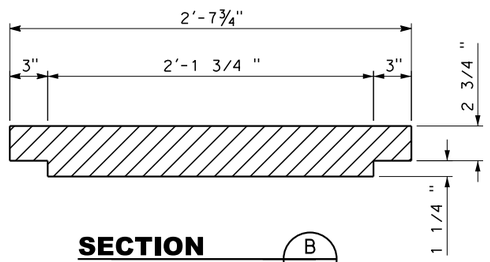

SECTION B
SCALE: 1/2"=1'-0"

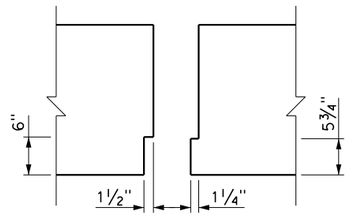

DETAIL 2
SCALE: 1"=1'-0"

RFP No. HSR 14-32 – INITIAL RELEASE - 05/27/2015

REV	DATE	BY	CHK	APP	DESCRIPTION

DESIGNED BY B. VALENTI
DRAWN BY V. LAVERDE
CHECKED BY P. LIN
IN CHARGE G. LUSHEROVICH
DATE 08/29/2014

PARSONS BRINCKERHOFF

CALIFORNIA HIGH-SPEED RAIL AUTHORITY

CALIFORNIA HIGH-SPEED TRAIN PROJECT
STRUCTURAL DIRECTIVE

TYPICAL CABLE TROUGH DETAILS
EMBANKMENT/CUT

CONTRACT NO.
DRAWING NO. DD-ST-901
SCALE AS SHOWN
SHEET NO.

LaverdeV 9/30/2014 11:45:08 AM CAHSRP.tbl CHSR_PDF_half_black.plt c:\projectwise\pbprojectwiseint\laverdev\dms32172\DD-ST-901.dgn

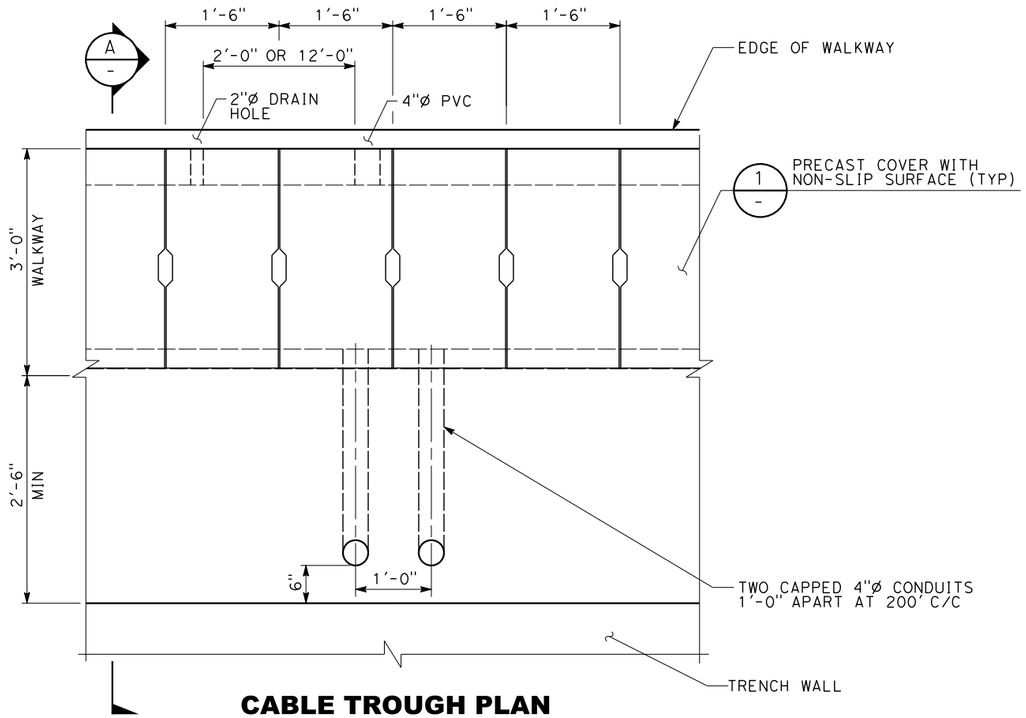

CABLE TROUGH PLAN AND CONDUIT DETAIL

SCALE: 1"=1'-0"

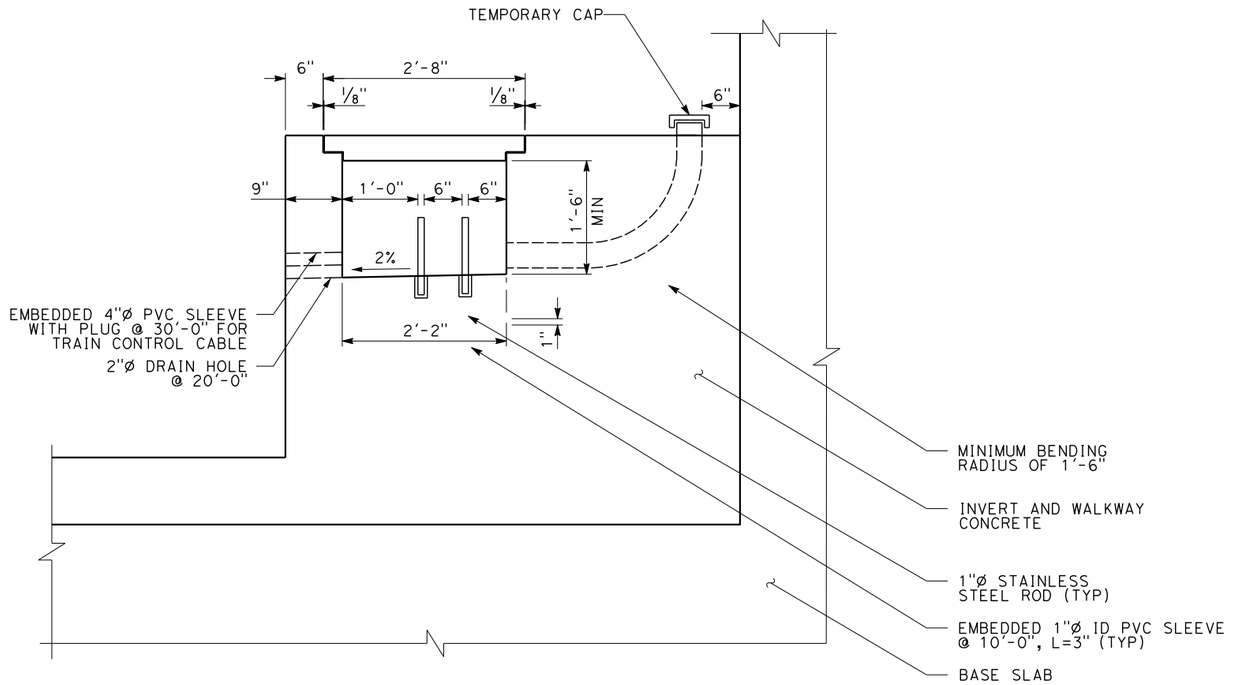

SECTION A

SCALE: 1"=1'-0"

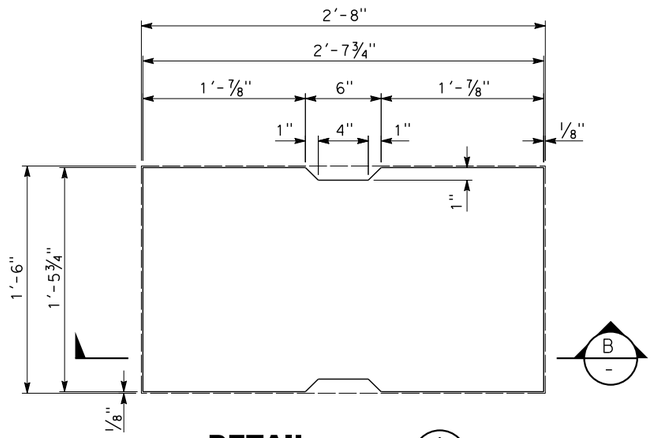

DETAIL 1

SCALE: 1/2"=1'-0"

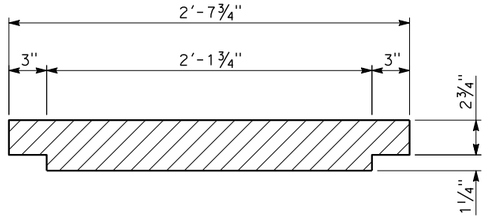

SECTION B

SCALE: 1/2"=1'-0"

RFP No. HSR 14-32 – INITIAL RELEASE - 05/27/2015

REV	DATE	BY	CHK	APP	DESCRIPTION

DESIGNED BY: B. VALENTI
DRAWN BY: V. HUANTE
CHECKED BY: P. LIN
IN CHARGE: J. CHIRCO
DATE: 01/24/2014

PARSONS BRINCKERHOFF

CALIFORNIA HIGH-SPEED RAIL AUTHORITY

CALIFORNIA HIGH-SPEED TRAIN PROJECT
STRUCTURAL DIRECTIVE

CABLE TROUGH DETAILS
TRENCH/CUT AND COVER TUNNEL

CONTRACT NO.:
DRAWING NO.: DD-ST-902
SCALE: AS SHOWN
SHEET NO.:

3/30/2014 11:40:10 AM CAHSRP.tbl CHSR_half_black.plt c:\projectwise\pb\projectwiseint\mincio\dms32172\DD-ST-902.dgn mincio

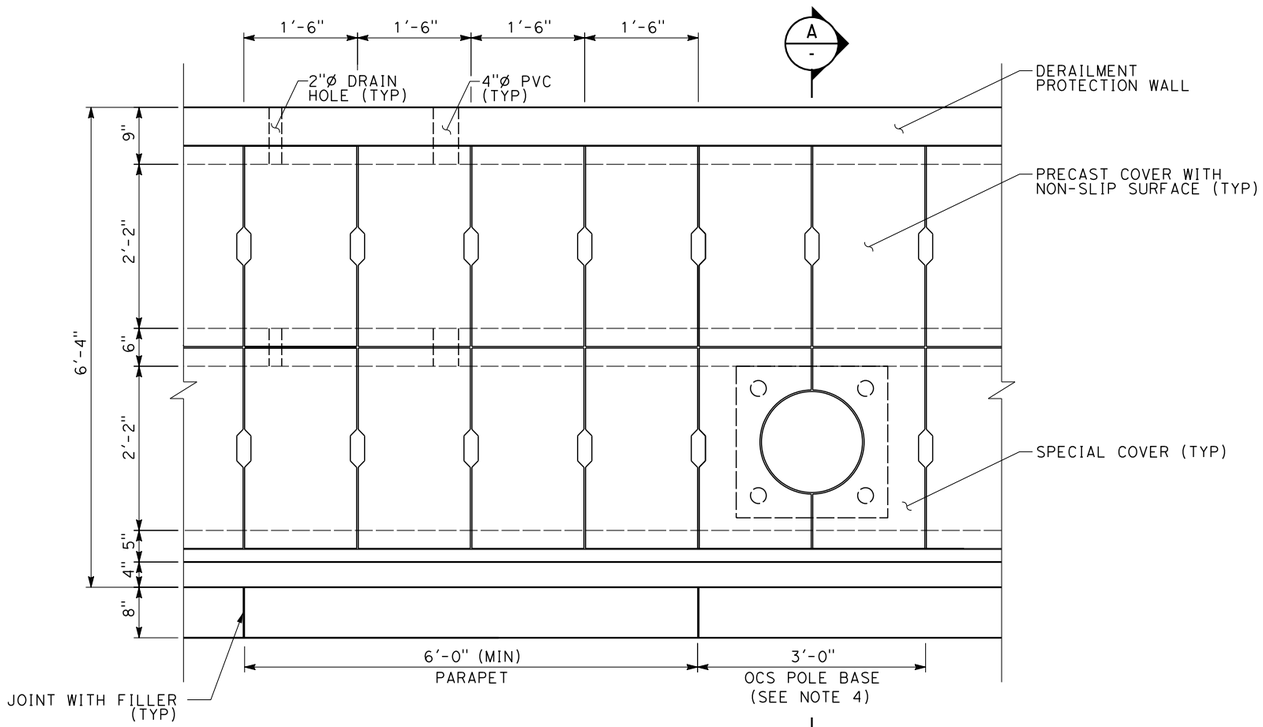

CABLE TROUGH AT OCS POLE PLAN

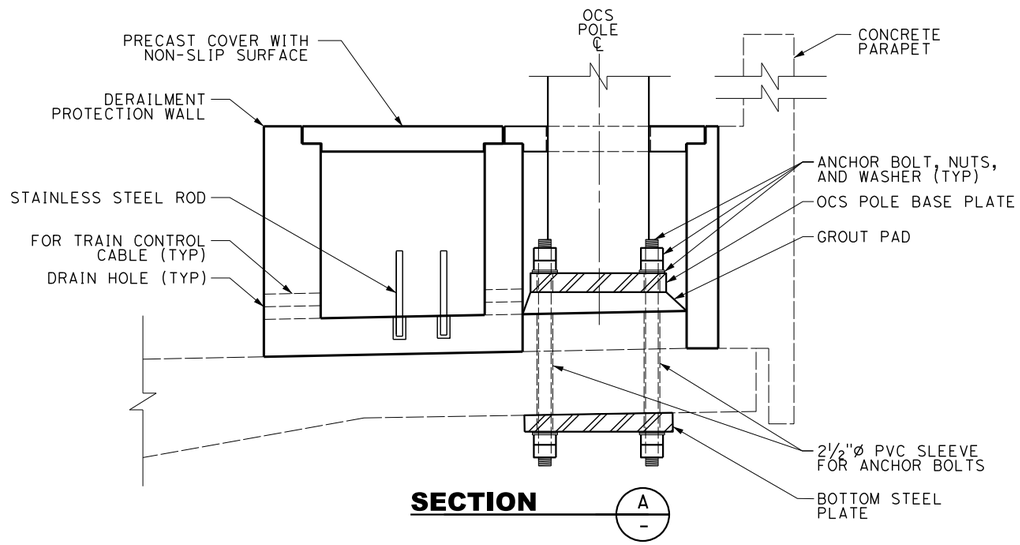

SECTION A-A

NOTES:

1. TRACK, SYSTEMS AND DRAINAGE ARE SCHEMATIC AND DO NOT REPRESENT DESIGN.
2. FOR PRECAST COVER DETAIL, SEE DRAWING "AERIAL STRUCTURE TYPICAL CABLE TROUGH DETAILS".
3. SEE STRUCTURAL DRAWING "AERIAL STRUCTURE TYPICAL CABLE TROUGH DETAILS" FOR DIMENSIONS NOT SHOWN.
4. OCS POLE, ANCHOR BOLT ASSEMBLIES, BASE PLATES, AND GROUT PAD FOR OCS POLE FOUNDATION ARE SHOWN FOR ILLUSTRATION ONLY. THE LOCATION OF EMBEDDED PVC SLEEVES AND LOADS FOR DESIGN OF OCS POLE FOUNDATION SHALL CONFORM TO THE REQUIREMENTS IN THE STRUCTURAL CHAPTER OF THE DESIGN CRITERIA.

0 1 2
1"=1'-0

RFP No. HSR 14-32 – INITIAL RELEASE - 05/27/2015

REV	DATE	BY	CHK	APP	DESCRIPTION

DESIGNED BY P. LIN
DRAWN BY V. HUANTE
CHECKED BY K. PUGASAP
IN CHARGE G. LUSHEROVICH
DATE 01/24/2014

PARSONS BRINCKERHOFF

CALIFORNIA HIGH-SPEED RAIL AUTHORITY

CALIFORNIA HIGH-SPEED TRAIN PROJECT
STRUCTURAL DIRECTIVE

AERIAL STRUCTURE
CABLE TROUGH DETAILS
AT OCS POLE

CONTRACT NO.
DRAWING NO. DD-ST-903
SCALE AS SHOWN
SHEET NO.

mincio 3/30/2014 11:40:54 AM CAHSRP.tbl CHSR_half_black.plt c:\projectwise\pb\projectwise\mincio\dms32172\DD-ST-903.dgn

NOTES:

1. BOTH HORIZONTAL AND VERTICAL TRANSITION OF THE CABLE TROUGH SHALL OCCUR WITHIN THE LONGITUDINAL STRUCTURAL TRANSITION ZONE.

2. SPECIAL TRANSITION TROUGH AND COVER WILL BE REQUIRED AT ANGLE POINTS. MAXIMIZE EXTENT OF STANDARD PIECES.

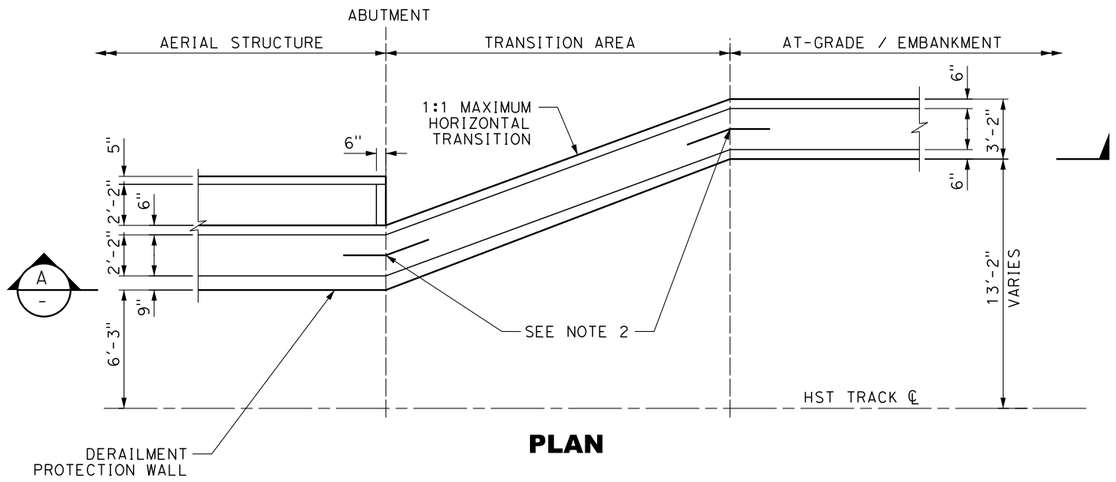

PLAN

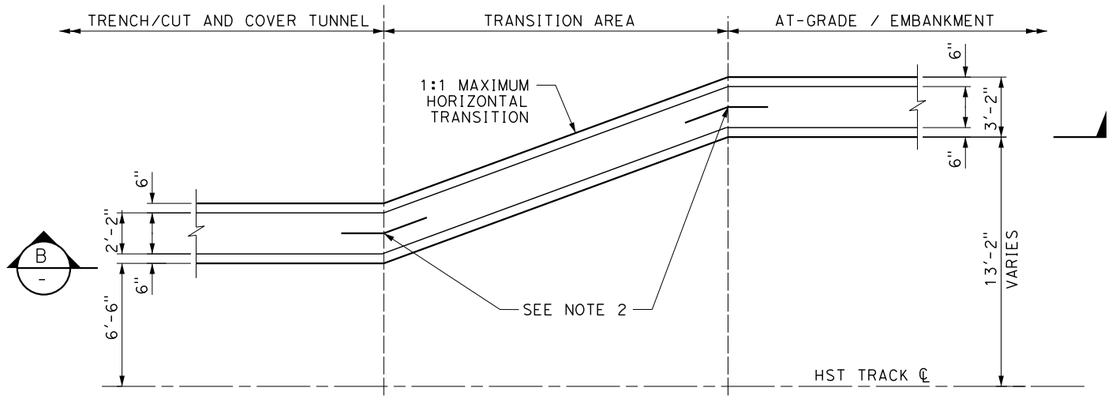

PLAN

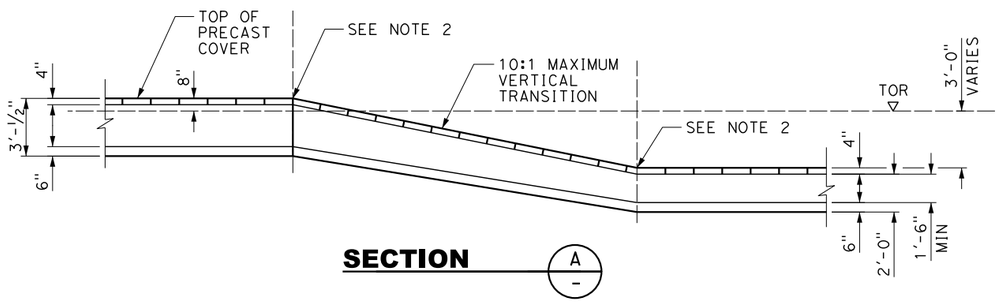

AERIAL STRUCTURE TO AT-GRADE/EMBANKMENT

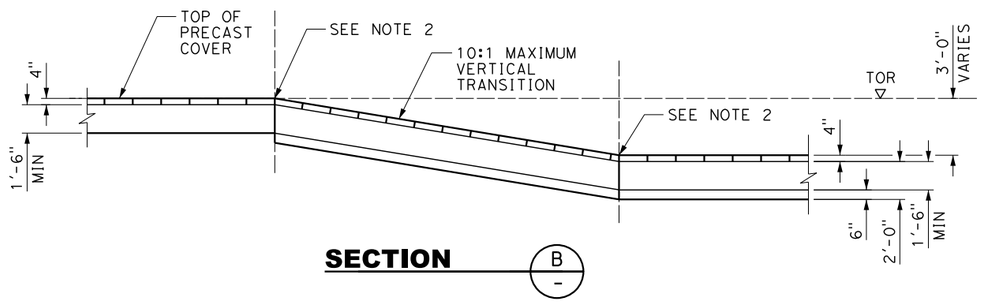

TRENCH/CUT AND COVER TUNNEL TO AT-GRADE/EMBANKMENT

4 0 4 8

1/4"=1'-0"

REV	DATE	BY	CHK	APP	DESCRIPTION

DESIGNED BY P. LIN
DRAWN BY V. HUANTE
CHECKED BY B. VALENTI
IN CHARGE G. LUSHEROVICH
DATE 01/24/2014

PARSONS BRINCKERHOFF

CALIFORNIA HIGH-SPEED RAIL AUTHORITY

CALIFORNIA HIGH-SPEED TRAIN PROJECT
STRUCTURAL DIRECTIVE

CABLE TROUGH LAYOUT TRANSITION AREAS

CONTRACT NO.
DRAWING NO. DD-ST-904
SCALE AS SHOWN
SHEET NO.

RFP No. HSR 14-32 – INITIAL RELEASE - 05/27/2015

3/30/2014 11:41:40 AM CAHSRP.tbl CHSR_half_black.plt c:\projectwise\pb\projectwise\mincio\dms32172\DD-ST-904.dgn mincio

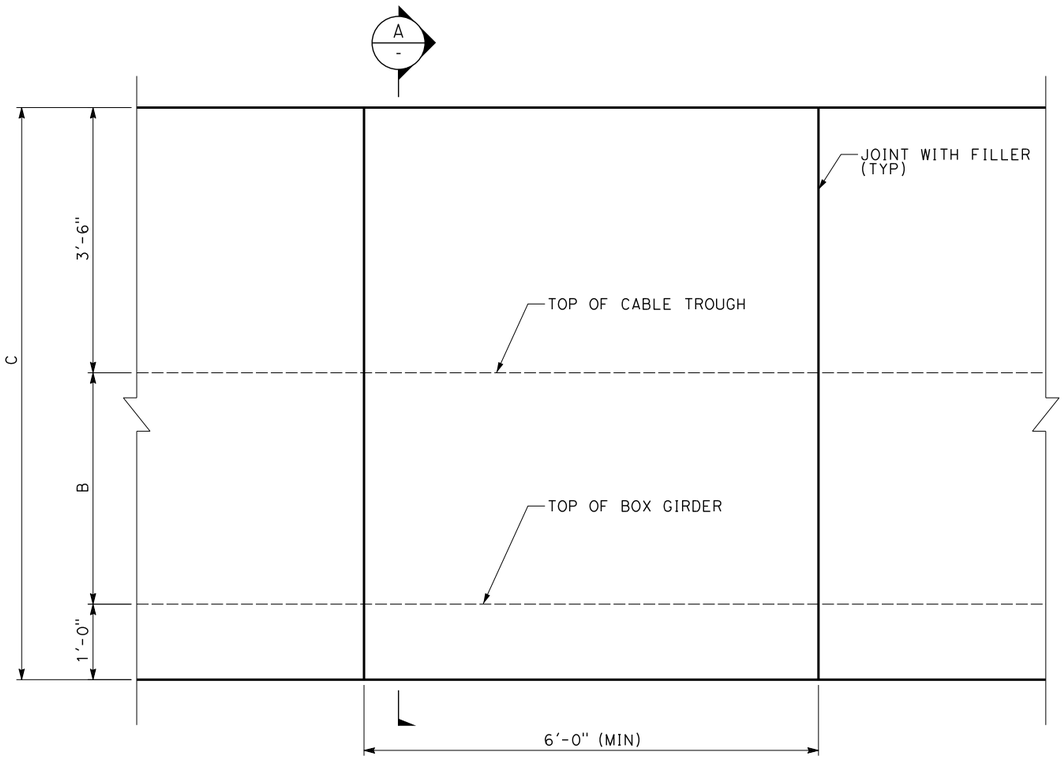

CONCRETE PARAPET
ELEVATION VIEW

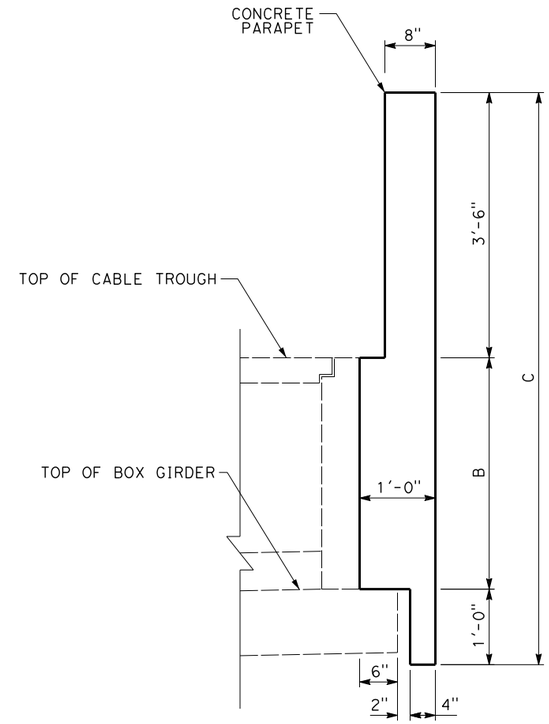

SECTION A -

NOTES:

1. PARAPETS SHALL BE PROVIDED ALONG EDGES OF AERIAL STRUCTURES, BRIDGES, AND HST GRADE SEPARATIONS.
2. PARAPETS SHALL BE DESIGNED FOR WIND LOADS, SLIPSTREAM EFFECTS, AND OTHER LOADS REQUIRED IN THE STRUCTURES CHAPTER OF THE DESIGN CRITERIA.
3. PARAPETS SHALL BE DESIGNED TO ACCOMMODATE FUTURE INSTALLATION OF SOUND WALLS.
4. AT CONSTRUCTION JOINTS OF CONCRETE PARAPETS, A JOINT WITH FILLER SHALL BE PROVIDED. IN ADDITION, A PARAPET EXPANSION JOINT SHALL BE DESIGNED AND PROVIDED AT EVERY AERIAL STRUCTURE AND BRIDGE EXPANSION JOINT LOCATION. THE INSIDE FACE OF JOINT OPENING SHALL BE COVERED WITH A GALVANIZED STEEL PLATE SECURELY FASTENED TO THE INSIDE FACE OF THE PARAPET ON ONE SIDE OF THE EXPANSION JOINT WITH A LENGTH OF THREE INCHES MORE THAN THE MAXIMUM JOINT MOVEMENT LENGTH.

	NON-BALLASTED TRACK		BALLASTED TRACK	
	TWO TRACK	ONE TRACK	TWO TRACK	ONE TRACK
B	2'-11 1/8"	3'-2 1/4"	3'-2 1/8" + T*	3'-5 1/4" + T*
C	7'-5 5/8"	7'-8 1/4"	7'-8 5/8" + T*	7'-11 1/4" + T*

T* = SUM OF WATERPROOFING MEMBRANE THICKNESS AND PROTECTION LAYER THICKNESS

0 1 2
1"=1'-0

RFP No. HSR 14-32 – INITIAL RELEASE - 05/27/2015

REV	DATE	BY	CHK	APP	DESCRIPTION

DESIGNED BY P. LIN
DRAWN BY V. HUANTE
CHECKED BY K. PUGASAP
IN CHARGE G. LUSHEROVICH
DATE 01/24/2014

PARSONS BRINCKERHOFF

CALIFORNIA HIGH-SPEED RAIL AUTHORITY

CALIFORNIA HIGH-SPEED TRAIN PROJECT
STRUCTURAL DIRECTIVE

AERIAL STRUCTURE
CONCRETE PARAPET

CONTRACT NO.
DRAWING NO. DD-ST-910
SCALE AS SHOWN
SHEET NO.

mincio 3/30/2014 11:42:59 AM CAHSRP.tbl CHSR_half_black.plt c:\projectwise\pb\projectwise\mincio\dms32172\DD-ST-910.dgn

c:\projectwise\pb\projectwiseint\mincio\dms32172\DD-ST-911.dgn
CHSR_half_black.plt
CAHSRP.tbl
3/30/2014 11:44:00 AM
mincio

NOTES:

1. THE SHEAR KEY DETAILS SHOWN ARE FOR ILLUSTRATION ONLY. THE CONTRACTOR SHALL DEVELOP A SHEAR KEY SYSTEM THAT CONFORMS TO THE REQUIREMENTS IN THE STRUCTURES CHAPTER OF THE DESIGN CRITERIA.
2. BEARINGS SHALL BE EASILY ACCESSIBLE FOR INSPECTION AND MAINTENANCE. BEARINGS SHALL BE ADJUSTABLE AND REPLACEABLE AT ANYTIME DURING THE LIFE OF STRUCTURES WITHOUT INTERFERENCE TO NORMAL TRAIN OPERATIONS.
3. THE PROCEDURES FOR BEARING REPLACEMENT, INCLUDING THE LOCATIONS OF JACKS AND THE ALLOWED JACKING FORCES SHALL BE SPECIFIED ON THE DRAWINGS.

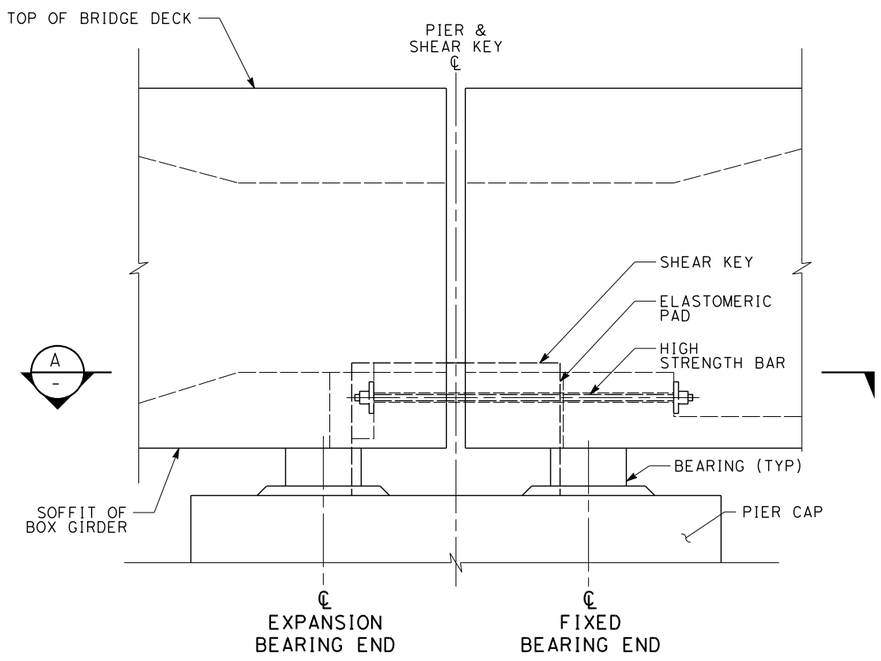

ELEVATION
CONCRETE PARAPET NOT SHOWN

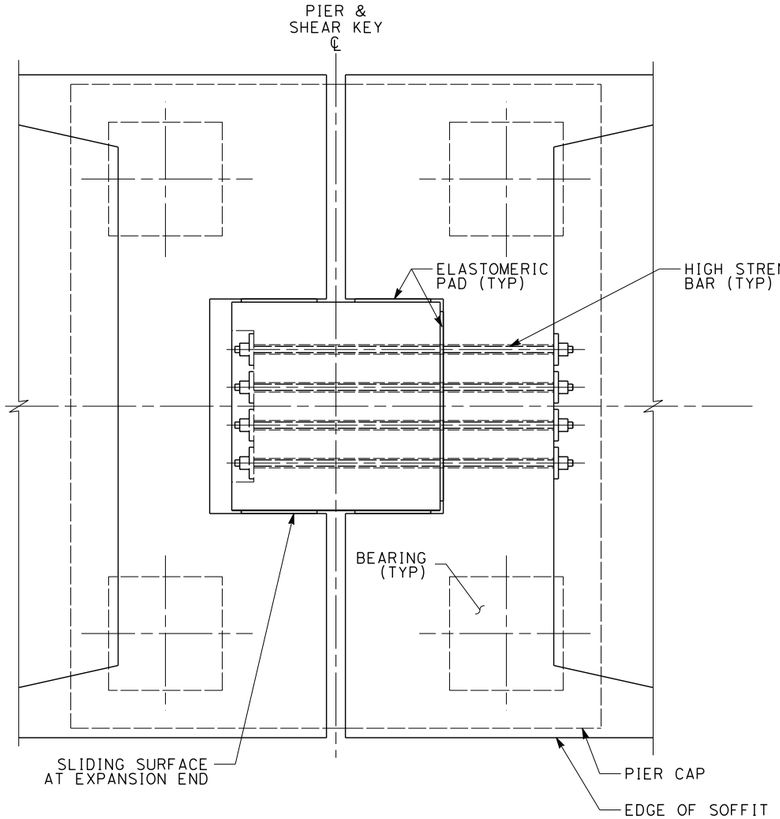

SECTION A -
1/2" = 1'-0"

2 0 2 4
1/2"=1'-0"

RFP No. HSR 14-32 – INITIAL RELEASE - 05/27/2015

REV	DATE	BY	CHK	APP	DESCRIPTION

DESIGNED BY P. LIN
DRAWN BY V. HUANTE
CHECKED BY K. PUGASAP
IN CHARGE G. LUSHEROVICH
DATE 01/24/2014

PARSONS BRINCKERHOFF

CALIFORNIA HIGH-SPEED RAIL AUTHORITY

CALIFORNIA HIGH-SPEED TRAIN PROJECT
STRUCTURAL DIRECTIVE

AERIAL STRUCTURE
TYPICAL SPAN
SHEAR KEY DETAILS

CONTRACT NO.
DRAWING NO. DD-ST-911
SCALE AS SHOWN
SHEET NO.

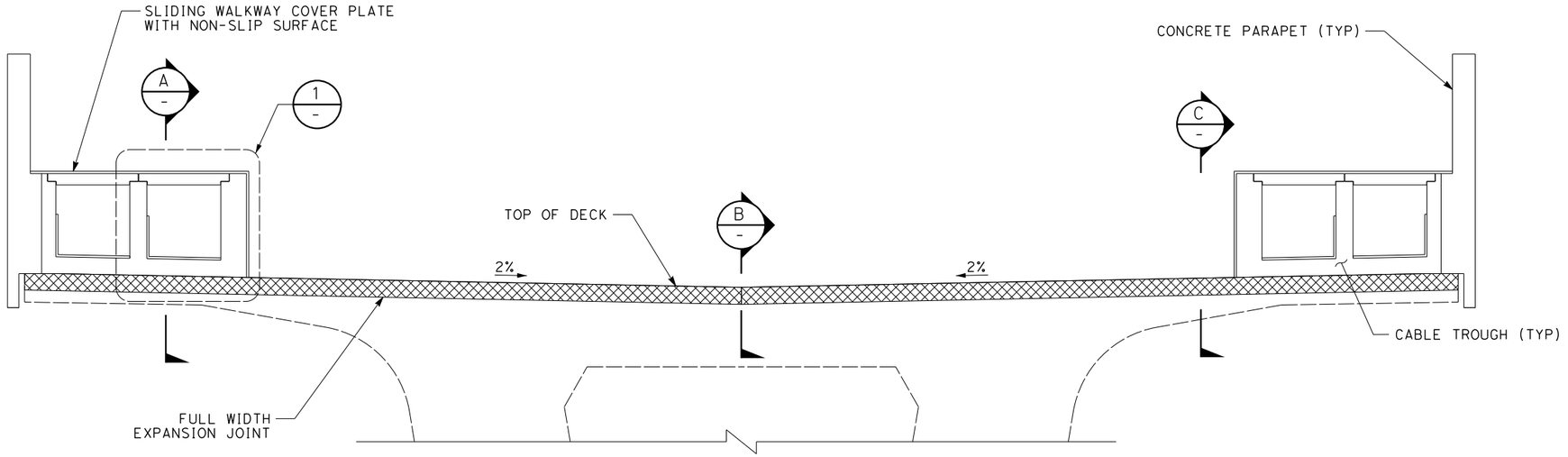

EXPANSION JOINT SECTION

NOTES:

1. THE EXPANSION JOINT DETAILS SHOWN ARE FOR ILLUSTRATION ONLY. THE CONTRACTOR SHALL DEVELOP AN EXPANSION JOINT SYSTEM THAT CONFORMS TO THE REQUIREMENTS IN THE STRUCTURES CHAPTER OF THE DESIGN CRITERIA.
2. THE EXPANSION OPENING BETWEEN THE ENDS OF BRIDGE DECK AND ABUTMENT SHALL ACCOMMODATE THE MOVEMENT RANGE AS SPECIFIED.
3. EXPANSION JOINTS SHALL BE EASILY ACCESSIBLE FOR INSPECTION AND MAINTENANCE. EXPANSION JOINTS SHALL BE REPLACEABLE AT ANYTIME DURING THE LIFE OF STRUCTURES WITHOUT INTERFERENCE TO NORMAL TRAIN OPERATIONS.
4. THE EXPANSION JOINT SHALL BE WATERTIGHT.
5. ALL STRUCTURAL STEEL PLATES SHALL BE GALVANIZED.

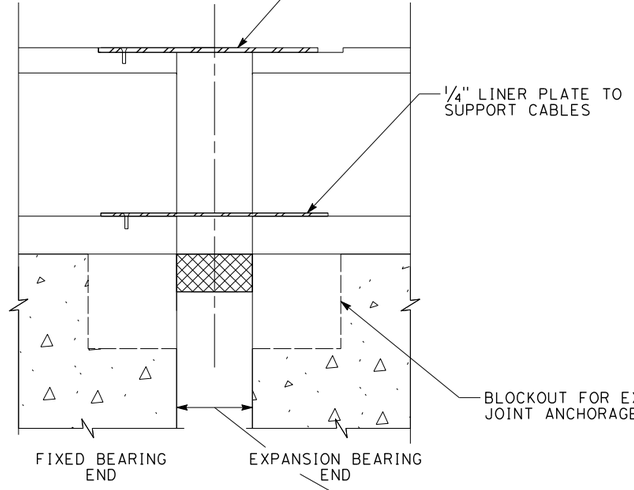

SECTION A -

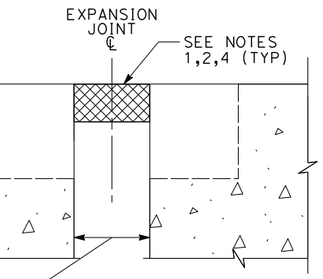

SECTION B -

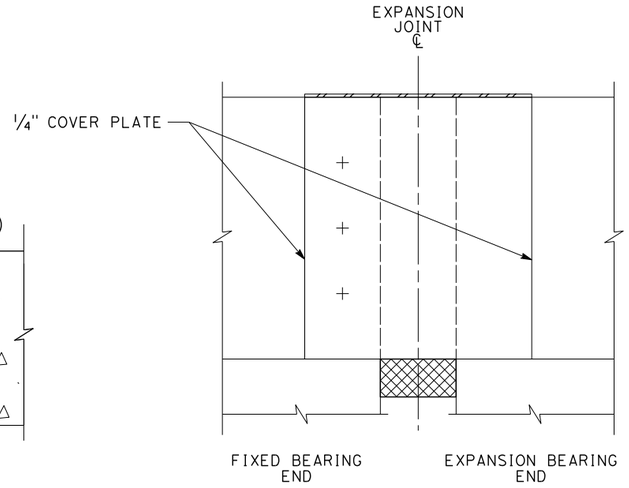

SECTION C -

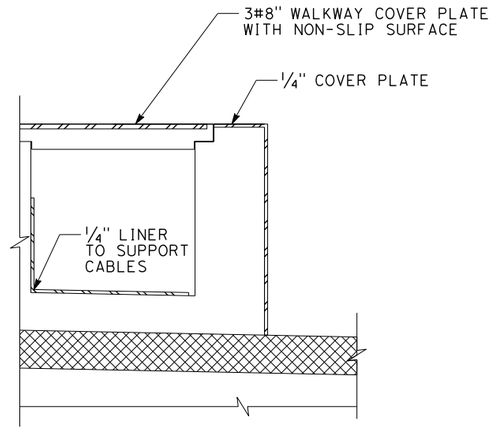

DETAIL 1 -

RFP No. HSR 14-32 – INITIAL RELEASE - 05/27/2015

REV	DATE	BY	CHK	APP	DESCRIPTION

DESIGNED BY: P. LIN
DRAWN BY: V. HUANTE
CHECKED BY: K. PUGASAP
IN CHARGE: G. LUSHEROVICH
DATE: 01/24/2014

PARSONS BRINCKERHOFF

CALIFORNIA HIGH-SPEED RAIL AUTHORITY

CALIFORNIA HIGH-SPEED TRAIN PROJECT
STRUCTURAL DIRECTIVE

AERIAL STRUCTURE
TYPICAL SPAN
EXPANSION JOINT DETAILS

CONTRACT NO.
DRAWING NO. DD-ST-912
SCALE NO SCALE
SHEET NO.

3/30/2014 11:44:41 AM CAHSRP.tbl CHSR_half_black.plt c:\projectwise\pb\projectwiseint\mincio\dms32172\DD-ST-912.dgn mincio

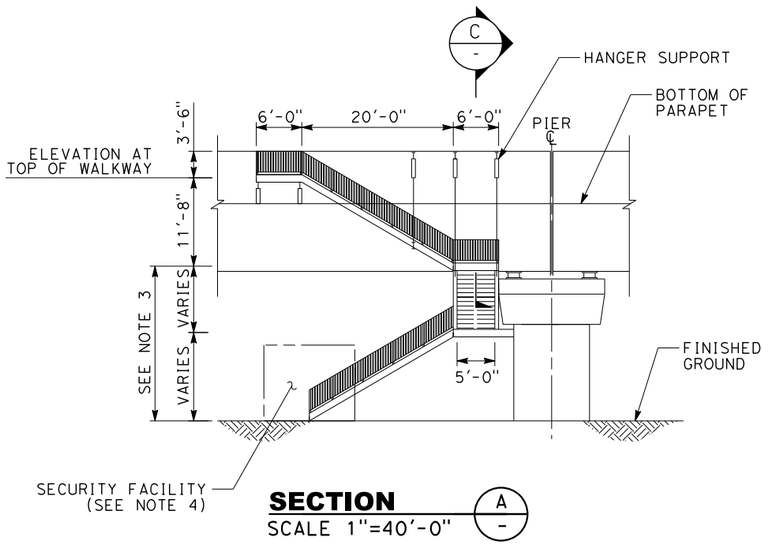

SECTION A
SCALE 1"=40'-0"

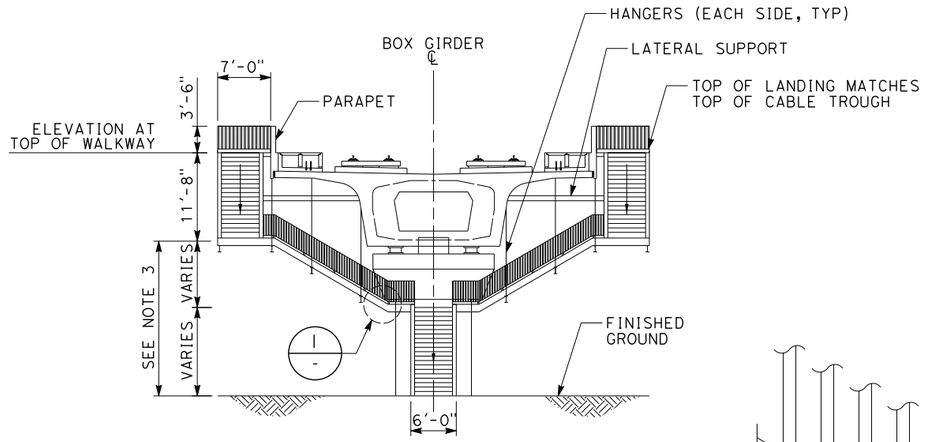

SECTION B
SCALE 1"=40'-0"

NOTES:

1. TRACK, SYSTEMS AND DRAINAGE ARE SCHEMATIC AND DO NOT REPRESENT DESIGN.
2. THE STAIRWAY STRUCTURAL SYSTEM SHOWN IS FOR ILLUSTRATION ONLY. THE CONTRACTOR MAY DESIGN AN EQUIVALENT STAIRWAY SYSTEM TO FIT THE SITE CONDITION.
3. WHERE VERTICAL DISTANCE BETWEEN LANDING EXCEEDS 12'-0", INTERMEDIATE LANDINGS MUST BE PROVIDED.
4. THE DESIGN OF THE SECURITY FACILITY SHALL MEET THE REQUIREMENTS OF THE EMERGENCY ACCESS/EGRESS POINTS, AS SPECIFIED IN THE SYSTEM SAFETY AND SECURITY CHAPTER OF THE DESIGN CRITERIA.
5. THE ACCESS ROAD FROM THE GATE OF SECURITY FACILITY TO THE LOCAL ROAD SHALL BE PROVIDED. THE CONTRACTOR SHALL COORDINATE WITH THE PERTINENT AUTHORITIES FOR REQUIRED EASEMENT ALONG THE AERIAL STRUCTURES.
6. THE CONTRACTOR SHALL CONSIDER THE LOADS DUE TO THE STAIRWAY IN THE DESIGN OF AERIAL STRUCTURES.

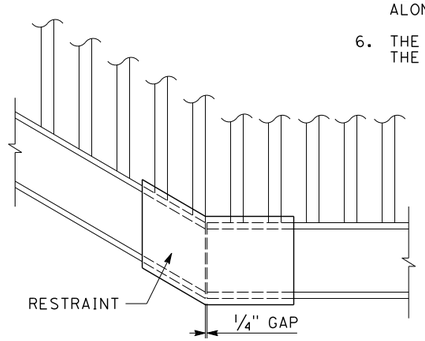

DETAIL 1
SCALE 1"=1'-0"

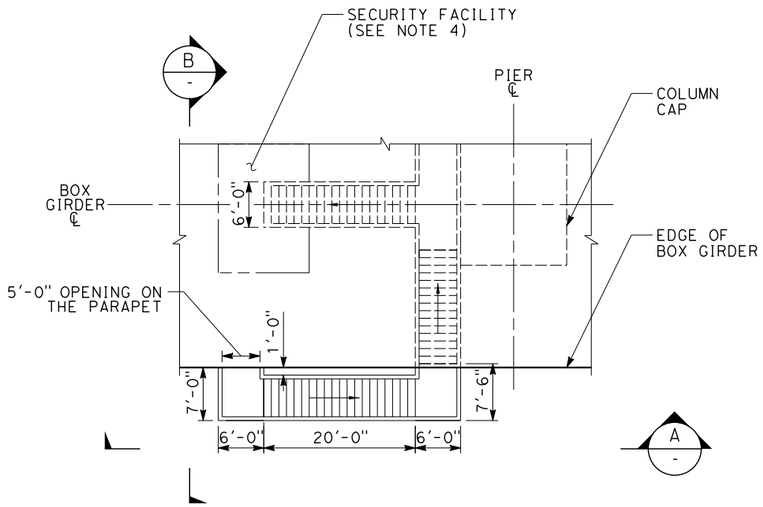

PLAN
SCALE: 1"=40'-0"

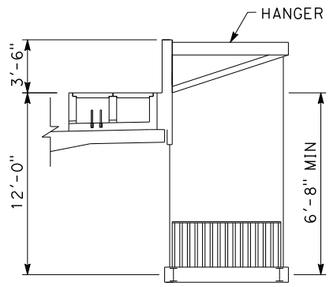

SECTION C
SCALE 1"=5'-0"

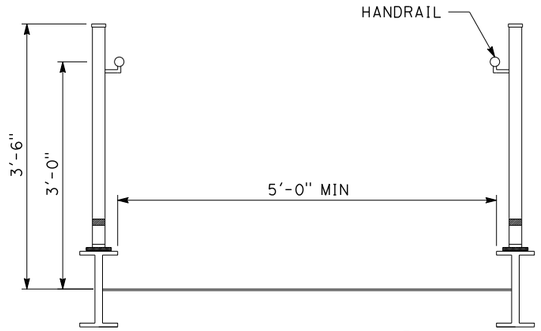

SECTION D
SCALE 1"=1'-0"

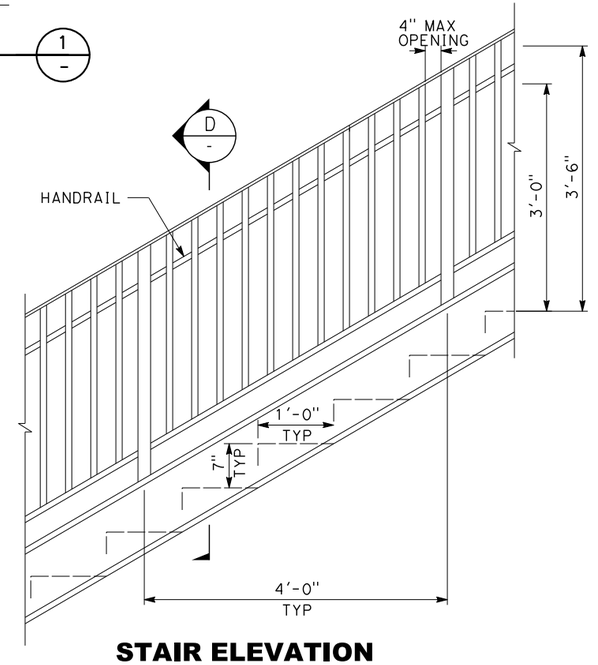

STAIR ELEVATION
SCALE: 1"=1'-0"

RFP No. HSR 14-32 – INITIAL RELEASE - 05/27/2015

REV	DATE	BY	CHK	APP	DESCRIPTION

DESIGNED BY P. LIN
DRAWN BY V. HUANTE
CHECKED BY K. PUGASAP
IN CHARGE G. LUSHEROVICH
DATE 01/24/2014

PARSONS BRINCKERHOFF

CALIFORNIA HIGH-SPEED RAIL AUTHORITY

CALIFORNIA HIGH-SPEED TRAIN PROJECT
STRUCTURAL DIRECTIVE

AERIAL STRUCTURE
EMERGENCY EXIT STAIRWAY DETAILS 1

CONTRACT NO.
DRAWING NO. DD-ST-913
SCALE AS SHOWN
SHEET NO.

mincio 3/30/2014 11:45:26 AM CAHSRP.tbl CHSR_half_black.plt c:\projectwise\pb\projectwiseint\mincio\dms32172\DD-ST-913.dgn

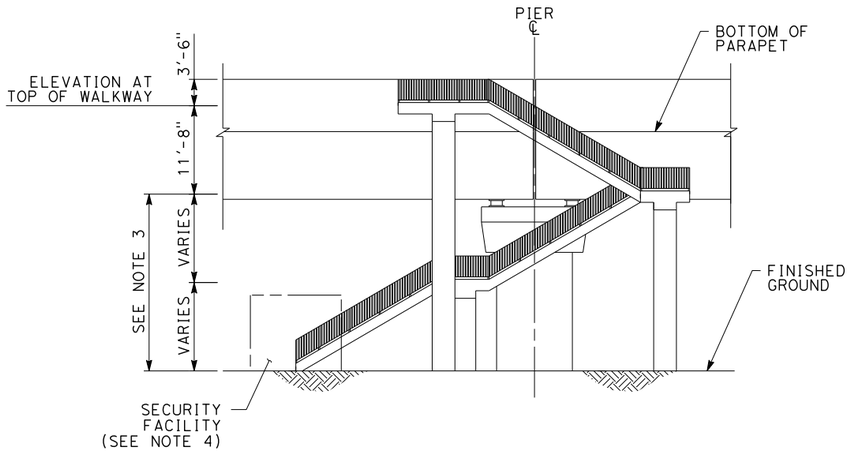

SECTION A
SCALE 1"=40'-0"

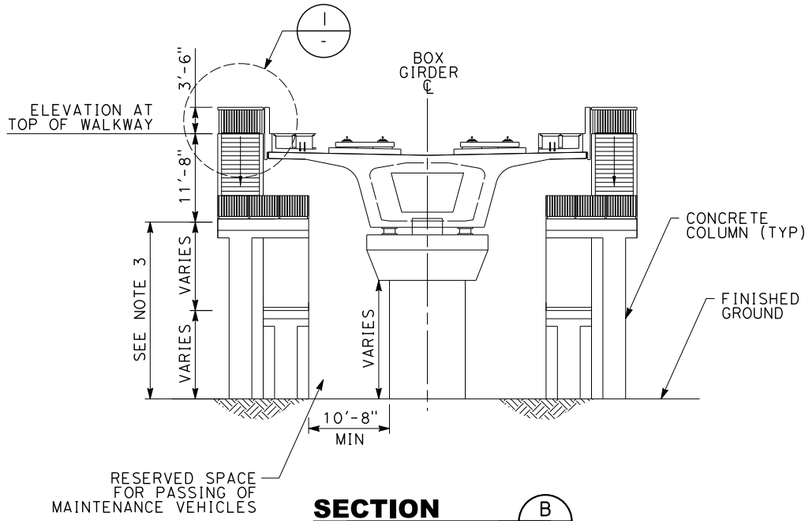

SECTION B
SCALE 1"=40'-0"

NOTES:

1. TRACK, SYSTEMS AND DRAINAGE ARE SCHEMATIC AND DO NOT REPRESENT DESIGN.
2. THE STAIRWAY STRUCTURAL SYSTEM SHOWN IS FOR ILLUSTRATION ONLY. THE CONTRACTOR MAY DESIGN AN EQUIVALENT STAIRWAY SYSTEM TO FIT THE SITE CONDITION.
3. WHERE VERTICAL DISTANCE BETWEEN LANDING EXCEEDS 12'-0", INTERMEDIATE LANDINGS SHALL BE PROVIDED.
4. THE DESIGN OF THE SECURITY FACILITY SHALL MEET THE REQUIREMENTS OF THE EMERGENCY ACCESS/EGRESS POINTS, AS SPECIFIED IN THE SYSTEM SAFETY AND SECURITY CHAPTER OF THE DESIGN CRITERIA.
5. THE ACCESS ROAD FROM THE GATE OF SECURITY FACILITY TO THE LOCAL ROAD SHALL BE PROVIDED. THE CONTRACTOR SHALL COORDINATE WITH THE PERTINENT AUTHORITIES FOR REQUIRED EASEMENT ALONG THE AERIAL STRUCTURES.
6. THE CONTRACTOR SHALL CONSIDER THE LOADS DUE TO THE STAIRWAY IN THE DESIGN OF AERIAL STRUCTURES.

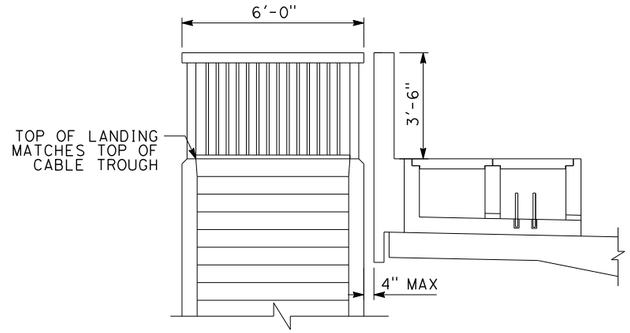

DETAIL 1
SCALE 1"=4'-0"

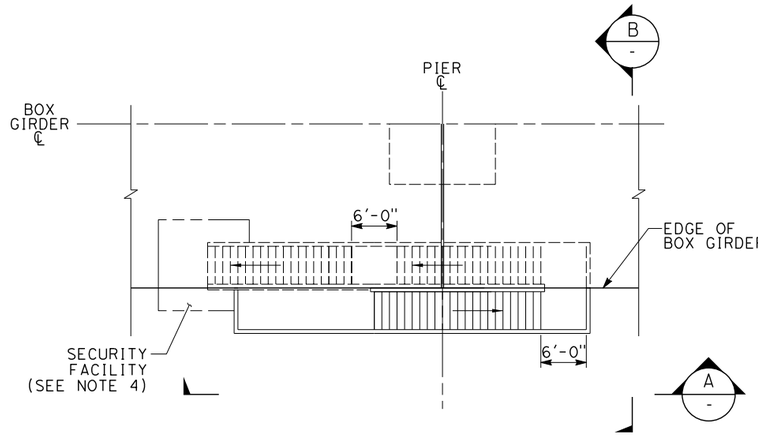

PLAN
SCALE: 1"=40'-0"

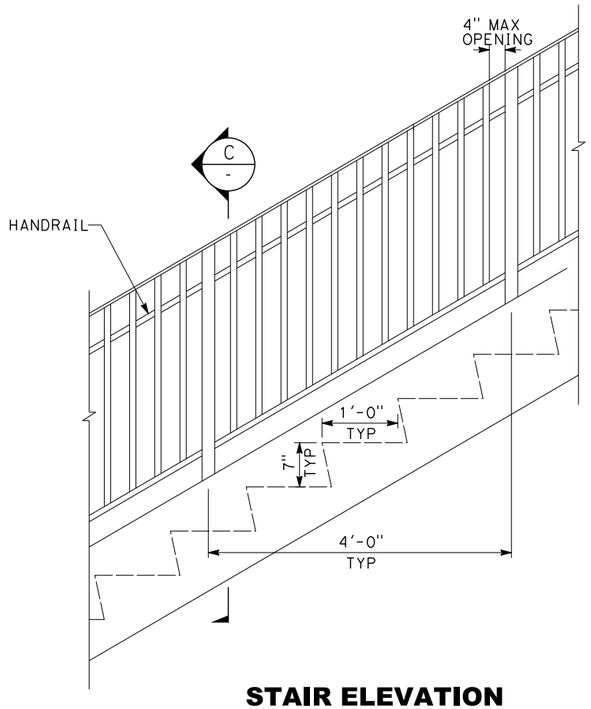

STAIR ELEVATION
SCALE: 1"=1'-0"

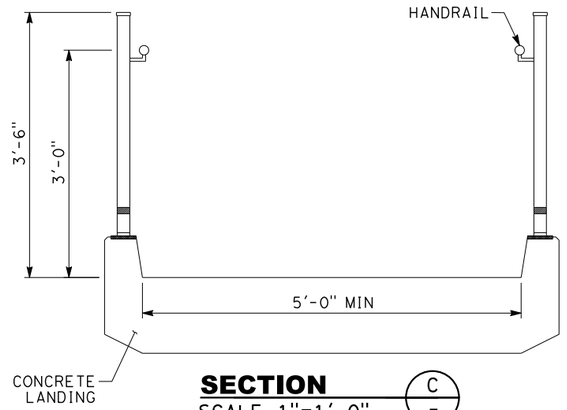

SECTION C
SCALE 1"=1'-0"

RFP No. HSR 14-32 – INITIAL RELEASE - 05/27/2015

REV	DATE	BY	CHK	APP	DESCRIPTION

DESIGNED BY P. LIN
DRAWN BY V. HUANTE
CHECKED BY K. PUGASAP
IN CHARGE G. LUSHEROVICH
DATE 01/24/2014

PARSONS BRINCKERHOFF

CALIFORNIA HIGH-SPEED RAIL AUTHORITY

CALIFORNIA HIGH-SPEED TRAIN PROJECT
STRUCTURAL DIRECTIVE

AERIAL STRUCTURE
EMERGENCY EXIT STAIRWAY DETAILS 2

CONTRACT NO.
DRAWING NO. DD-ST-914
SCALE AS SHOWN
SHEET NO.

minicio 3/30/2014 11:51:16 AM CAHSRP.tbl CHSR_half_black.plt c:\projectwise\pb\projectwiseint\minicio\dms32172\DD-ST-914.dgn

NOTES:

1. ELEVATION OF TOP OF WALL AND BOTTOM OF FOOTING SHALL BE AS SHOWN ON OTHER CONTRACT DRAWINGS, VALUES OF H ARE DESIGN HEIGHTS ONLY.
2. WALL OFFSET SHALL BE DETERMINED BY THE PROJECT STRUCTURAL ENGINEER IN CONSULTATION WITH THE PROJECT GEOTECHNICAL ENGINEER BASED ON THE CONSTRUCTION METHOD AND SEQUENCING AND IN ACCORDANCE WITH PROJECT DESIGN CRITERIA.
3. WHEN A RETAINING WALL IS USED AS A CUT WALL (INCLUDING TRENCH WALLS) ALL JOINTS INCLUDING THE WEAKENED PLANE JOINTS SHALL CONTAIN A WATER STOP.

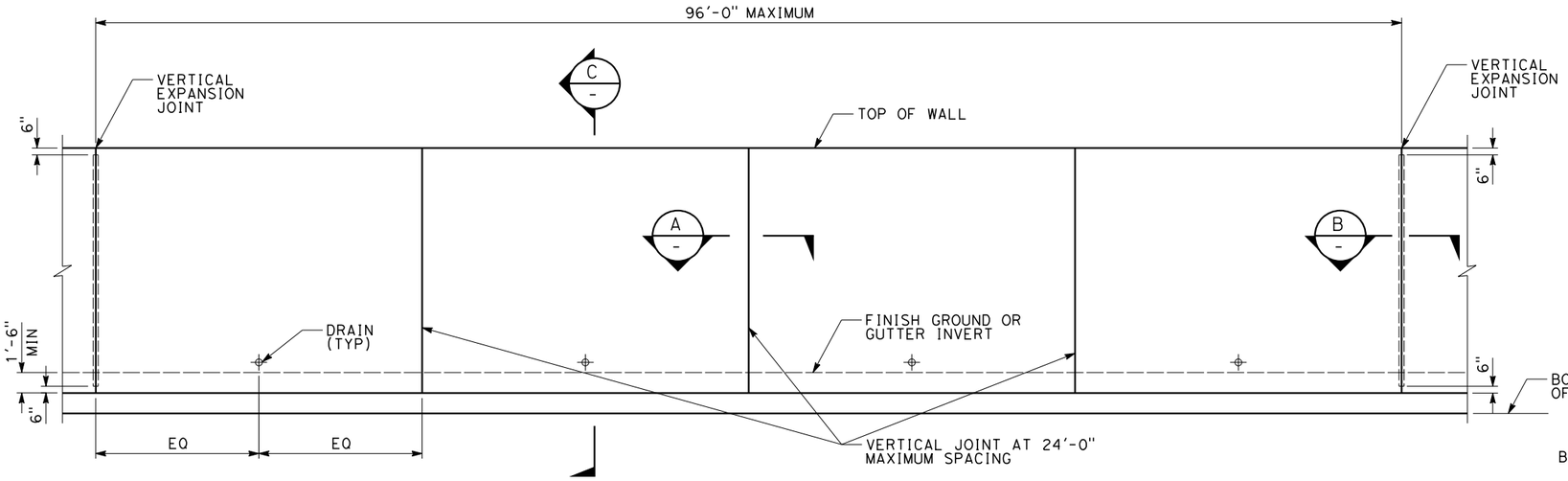

RETAINING WALL ELEVATION

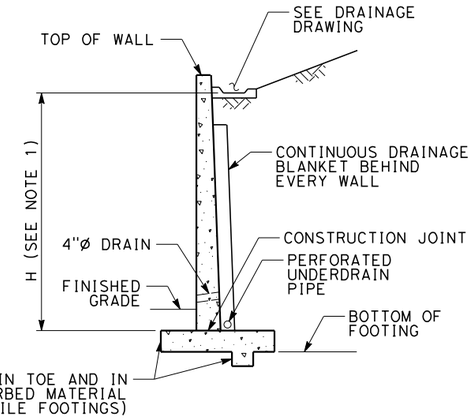

TYPICAL SECTION (C)

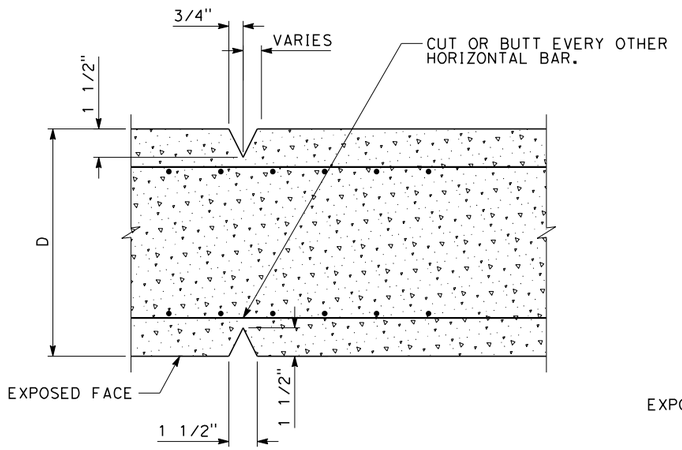

TYPICAL WEAKEND PLANE JOINT (A)

(SEE NOTE 3)

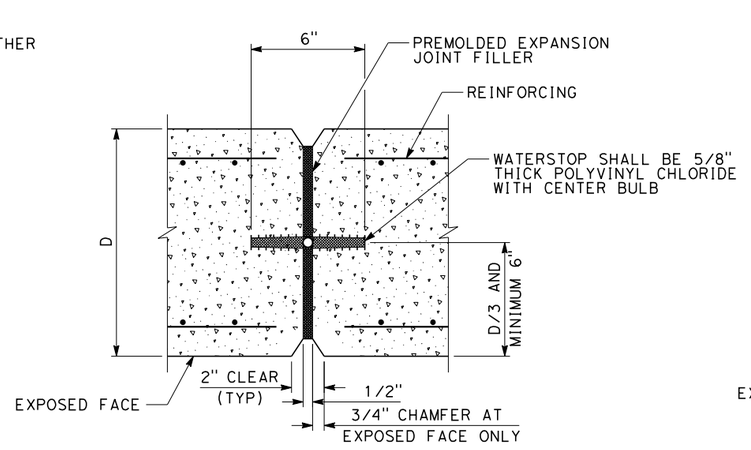

TYPICAL EXPANSION JOINT (B)

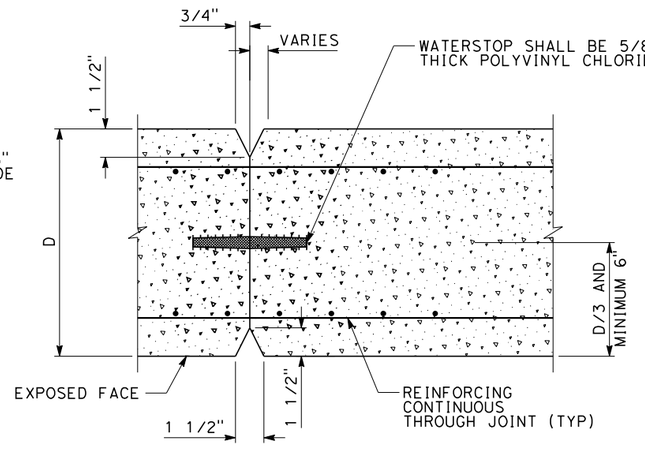

TYPICAL CONSTRUCTION JOINT

LOCATE AS REQUIRED TO SUITE CONSTRUCTION SEQUENCE

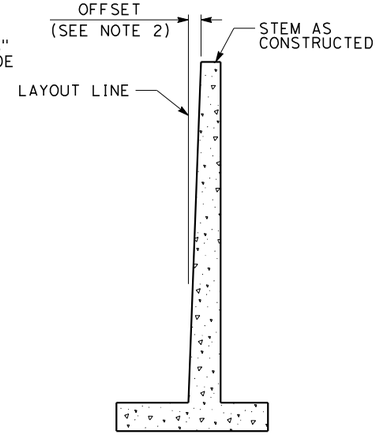

WALL OFFSET VALUES

RFP No. HSR 14-32 – INITIAL RELEASE - 05/27/2015

REV	DATE	BY	CHK	APP	DESCRIPTION

DESIGNED BY B. VALENTI
DRAWN BY V. LAVERDE
CHECKED BY P. LIN
IN CHARGE G. LUSHEROVICH
DATE 08/29/2014

PARSONS BRINCKERHOFF

CALIFORNIA HIGH-SPEED RAIL AUTHORITY

CALIFORNIA HIGH-SPEED TRAIN PROJECT
STRUCTURAL DIRECTIVE

RETAINING WALL
LAYOUT AND DETAILS

CONTRACT NO.
DRAWING NO. DD-ST-920
SCALE NO SCALE
SHEET NO.

LaverdeV 9/30/2014 11:46:22 AM CAHSRP.tbl CHSR_PDF_half_black.plt c:\projectwise\pb\projectwiseint\laverdev\dms32172\DD-ST-920.dgn

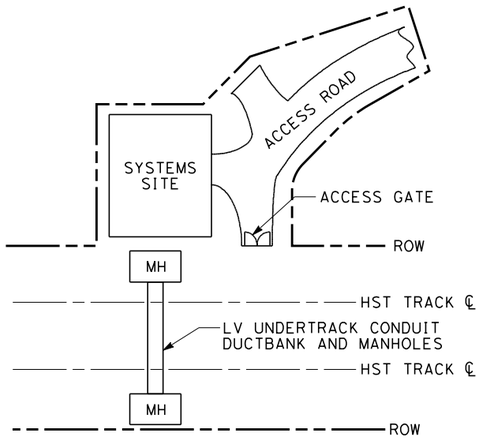

DIAGRAM A

AT-GRADE LOW-VOLTAGE UNDERTRACK CONDUIT DUCTBANK, ACCESS ROADS AND GATES AT SYSTEMS SITE

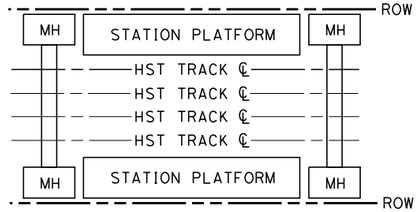

DIAGRAM B

LOW-VOLTAGE UNDERTRACK DUCTBANK AT STATION PLATFORMS

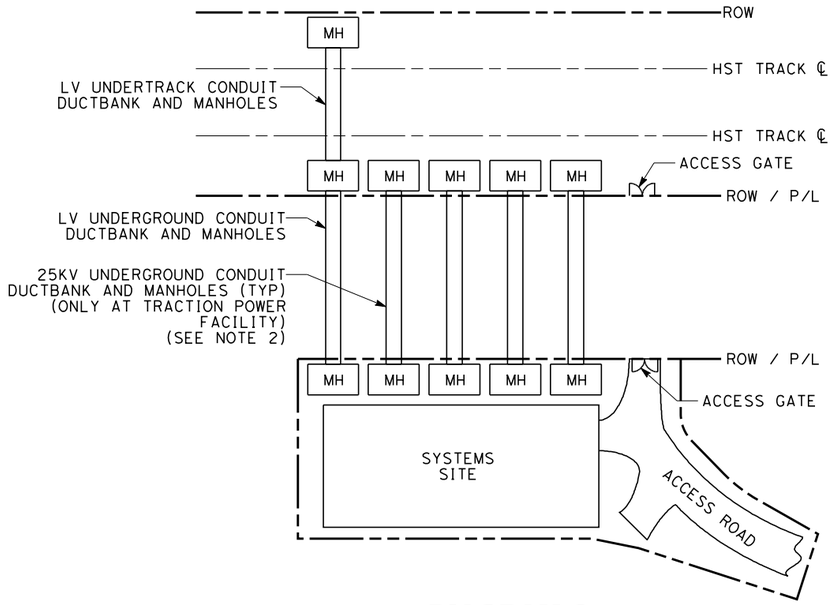

DIAGRAM C

AT-GRADE LOW-VOLTAGE UNDERTRACK AND UNDERGROUND CONDUIT DUCT BANK, 25KV UNDERGROUND CONDUIT DUCT BANK, ACCESS ROADS AND GATES AT SYSTEMS SITE LOCATED AWAY FROM HSR ROW

NOTES:

1. SYSTEM SITES INCLUDE TRACTION POWER FACILITIES, TRAIN CONTROL HOUSES, STANDALONE RADIO SITES.
2. TYPICALLY THERE ARE FOUR 25KV UNDERGROUND CONDUIT DUCTBANKS AND ACCOMPANYING MANHOLES PER TRACTION POWER SITE.
3. ACCESS ROADS AND ACCESS GATES ARE SHOWN FOR INFORMATION ONLY. CONSULT CIVIL DESIGN CRITERIA AND PRELIMINARY DESIGN PLANS FOR REQUIREMENTS AND DETAILS.
4. SEE TRACTION POWER AND COMMUNICATIONS DRAWINGS FOR DUCTBANK, MANHOLE CROSS SECTIONS, DETAILS AND ELEVATIONS.
5. FOR NUMBERS OF CONDUITS SEE COMMUNICATION DESIGN CRITERIA AND DRAWING "TYPICAL CROSS SECTION SYSTEMS LOW-VOLTAGE CONDUIT DUCTBANK".
6. INTERMEDIATE MANHOLES TO BE INCLUDED BASED UPON APPLICABLE STANDARDS, REGULATIONS AND CODES.

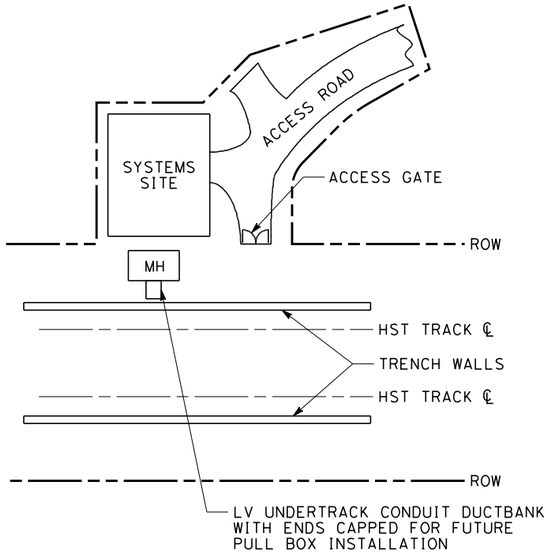

DIAGRAM D

TRENCH LOW-VOLTAGE UNDERTRACK CONDUIT DUCT BANK AND ACCESS ROADS AND GATES AT SYSTEMS SITE

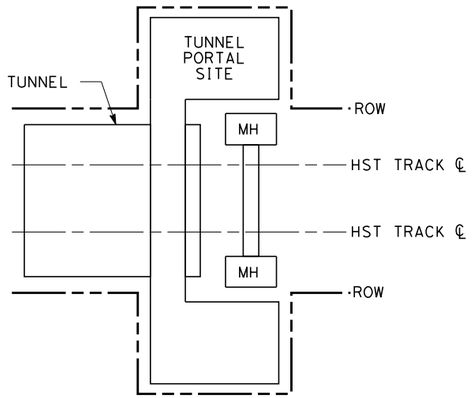

DIAGRAM E

AT-GRADE LOW-VOLTAGE UNDERTRACK CONDUIT DUCTBANK AT TUNNEL PORTAL SITES

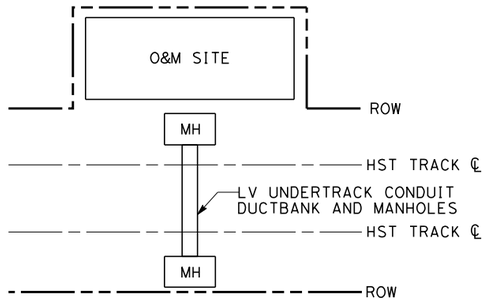

DIAGRAM F

AT-GRADE LOW-VOLTAGE UNDERTRACK CONDUIT DUCTBANK AT O&M FACILITIES UNDIVIDED

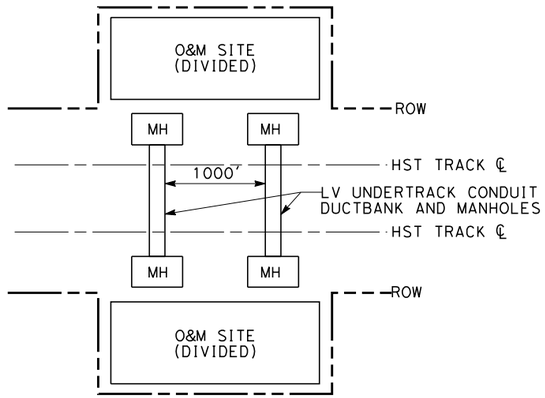

DIAGRAM G

AT-GRADE LOW-VOLTAGE UNDERTRACK CONDUIT DUCTBANK AT O&M FACILITIES DIVIDED BY MAINLINE TRACK

REV	DATE	BY	CHK	APP	DESCRIPTION
B	TBD				POST CP01 CONFORMED SET
A	05/31/13				EXECUTION VERSION

DESIGNED BY B. BANKS
DRAWN BY V. HUANTE
CHECKED BY C. DALOIA
IN CHARGE R. SCHMEDES
DATE 11/19/2013

PARSONS BRINCKERHOFF

CALIFORNIA HIGH-SPEED RAIL AUTHORITY

CALIFORNIA HIGH-SPEED TRAIN PROJECT
SYSTEMS DIRECTIVE

TYPICAL CIVIL ACCOMMODATIONS FOR SYSTEMS AT SYSTEM SITES, STATIONS, TUNNEL PORTAL FACILITIES AND O&M FACILITIES

CONTRACT NO.
DRAWING NO. DD-SY-010
SCALE NO SCALE
SHEET NO.

RFP No. HSR 14-32 – INITIAL RELEASE - 05/27/2015

Huante 11/19/2013 9:24:35 AM CAHSRP.tbl CHSR_PDF_half_black.plt c:\projectwise\pb\projectwiseint\huante\dms32178\DD-SY-010.dgn

NOTES:

1. STRUCTURAL DESIGN DETAILS, CABLE TROUGH AND OCS SLEEVES SHOWN HERE ARE SCHEMATIC ONLY.
2. SLEEVE PENETRATION LOCATIONS SHALL BE LOCATED NOMINALLY 10 5/32 FROM THE EXPANSION JOINT.
3. SLEEVE PENETRATION LOCATIONS FOR FUTURE CONDUIT PENETRATIONS SHALL BE PROVIDED IN LINE WITH THE OCS POLE FOUNDATIONS.
4. FOR EACH SLEEVE PENETRATION, AREA SHALL BE SIZED TO HOUSE 10 TRADE SIZE 4 CONDUITS.
5. FOR CONDUIT RISER EMBEDMENTS AND PENETRATIONS ON AERIAL STRUCTURE REQUIREMENTS, REFER TO STRUCTURES CHAPTER OF THE DESIGN CRITERIA. PENETRATIONS SHALL BE PLACED AT THE NEAREST 3 COLUMNS TO THE SYSTEMS SITE OR FACILITY AS SHOWN.

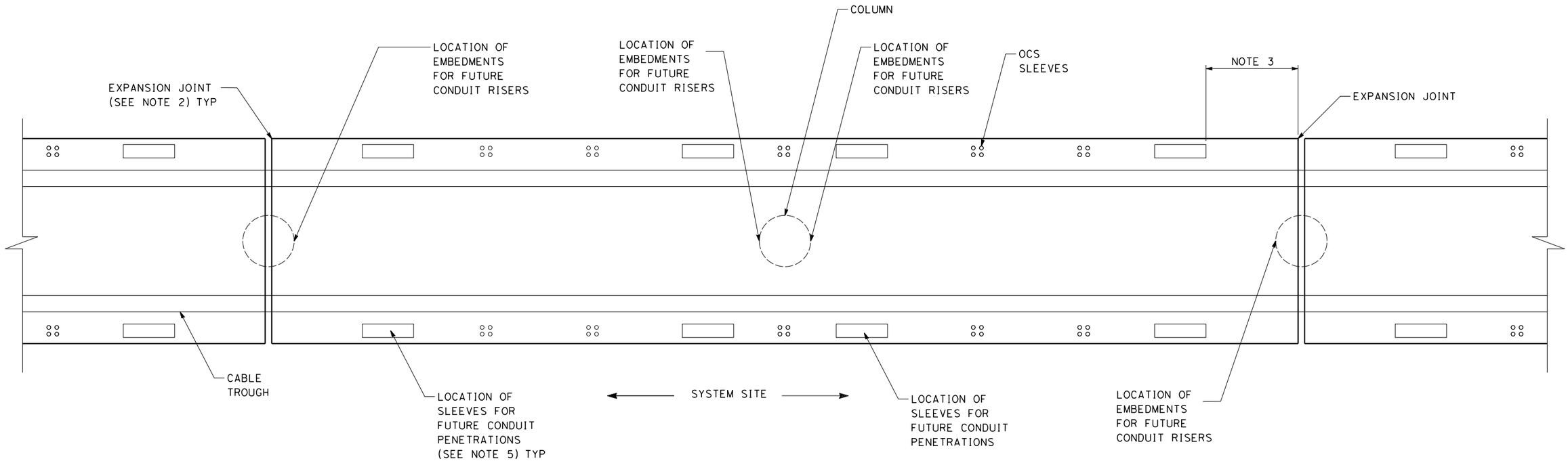

PLAN

REV	DATE	BY	CHK	APP	DESCRIPTION

DESIGNED BY: G. SPADAFORE
DRAWN BY: V. LAVERDE
CHECKED BY: B. MCNALLY
IN CHARGE: B. BANKS
DATE: 8/29/2014

PARSONS BRINCKERHOFF

CALIFORNIA HIGH-SPEED RAIL AUTHORITY

CALIFORNIA HIGH-SPEED TRAIN PROJECT
TRAIN CONTROL DIRECTIVE

SYSTEMS SITE LOCATION AT AERIAL STRUCTURE EMBEDMENTS AND KNOCKOUTS

CONTRACT NO.
DRAWING NO. DD-SY-030
SCALE NO SCALE
SHEET NO.

RFP No. HSR 14-32 – INITIAL RELEASE - 05/27/2015

LaverdeV 9/30/2014 11:52:10 AM CAHSRP.tbl CHSR_PDF_half_black.plt c:\projectwise\pb\projectwise\dms32178\DD-SY-030.dgn

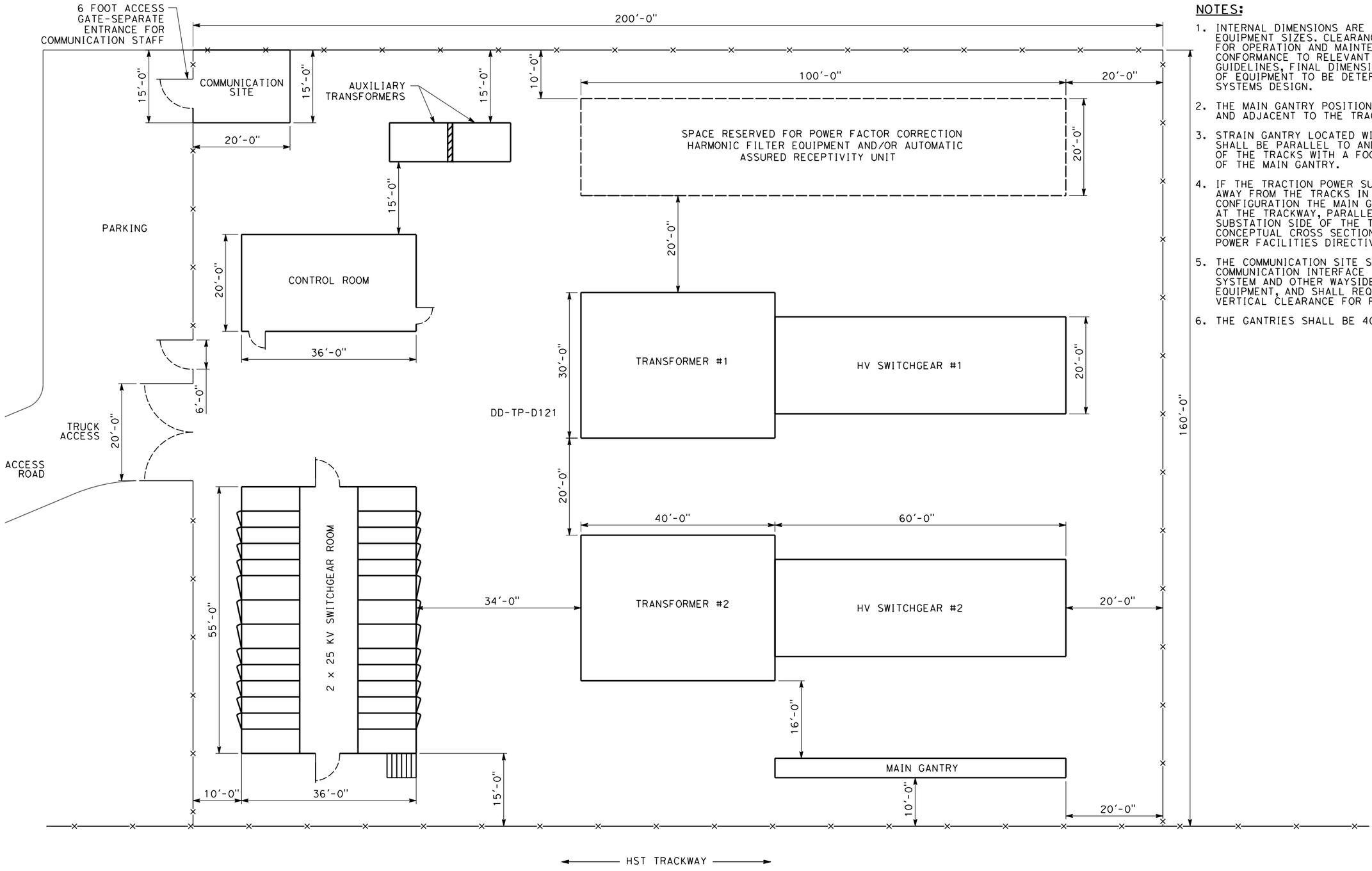

NOTES:

1. INTERNAL DIMENSIONS ARE SHOWN FOR TYPICAL EQUIPMENT SIZES. CLEARANCES AND ACCESSIBILITY FOR OPERATION AND MAINTENANCE OF EQUIPMENT AND CONFORMANCE TO RELEVANT CODES, STANDARDS, AND GUIDELINES, FINAL DIMENSIONS AND CONFIGURATION OF EQUIPMENT TO BE DETERMINED DURING FINAL SYSTEMS DESIGN.
2. THE MAIN GANTRY POSITION SHALL BE PARALLEL TO AND ADJACENT TO THE TRACKWAY.
3. STRAIN GANTRY LOCATED WITHIN THE RIGHT-OF-WAY, SHALL BE PARALLEL TO AND ON THE OPPOSITE SIDE OF THE TRACKS WITH A FOOTPRINT EQUAL TO THAT OF THE MAIN GANTRY.
4. IF THE TRACTION POWER SUBSTATION IS LOCATED AWAY FROM THE TRACKS IN AN UNDESIRED CONFIGURATION THE MAIN GANTRY SHALL BE LOCATED AT THE TRACKWAY, PARALLEL TO AND TOWARDS SUBSTATION SIDE OF THE TRACKS. REFER TO CONCEPTUAL CROSS SECTIONS OF AWAY TRACTION POWER FACILITIES DIRECTIVE DRAWINGS.
5. THE COMMUNICATION SITE SHALL HOUSE COMMUNICATION INTERFACE EQUIPMENT FOR SCADA SYSTEM AND OTHER WAYSIDE COMMUNICATION EQUIPMENT, AND SHALL REQUIRE MINIMUM 100' VERTICAL CLEARANCE FOR RADIO TOWER.
6. THE GANTRIES SHALL BE 40 FEET HIGH (TYP).

RFP No. HSR 14-32 – INITIAL RELEASE - 05/27/2015

REV	DATE	BY	CHK	APP	DESCRIPTION

DESIGNED BY M. PAZ
DRAWN BY V. HUANTE
CHECKED BY V. SIBAL
IN CHARGE B. BANKS
DATE 8/29/2014

PARSONS BRINCKERHOFF

CALIFORNIA HIGH-SPEED RAIL AUTHORITY

CALIFORNIA HIGH-SPEED TRAIN PROJECT
TRACTION POWER DIRECTIVE

CONCEPTUAL LAYOUT
TRACTION POWER SUBSTATION
WITH TWO HIGH-VOLTAGE TRANSFORMERS

CONTRACT NO.
DRAWING NO. DD-TP-D101
SCALE NO SCALE
SHEET NO.

LayerDev 9/30/2014 12:10:37 PM CAHSRP.tbl CHSR_PDF_half_black.plt c:\projectwise\pbprojectwise\int\layerdev\dms17831\DD-TP-D101.dgn

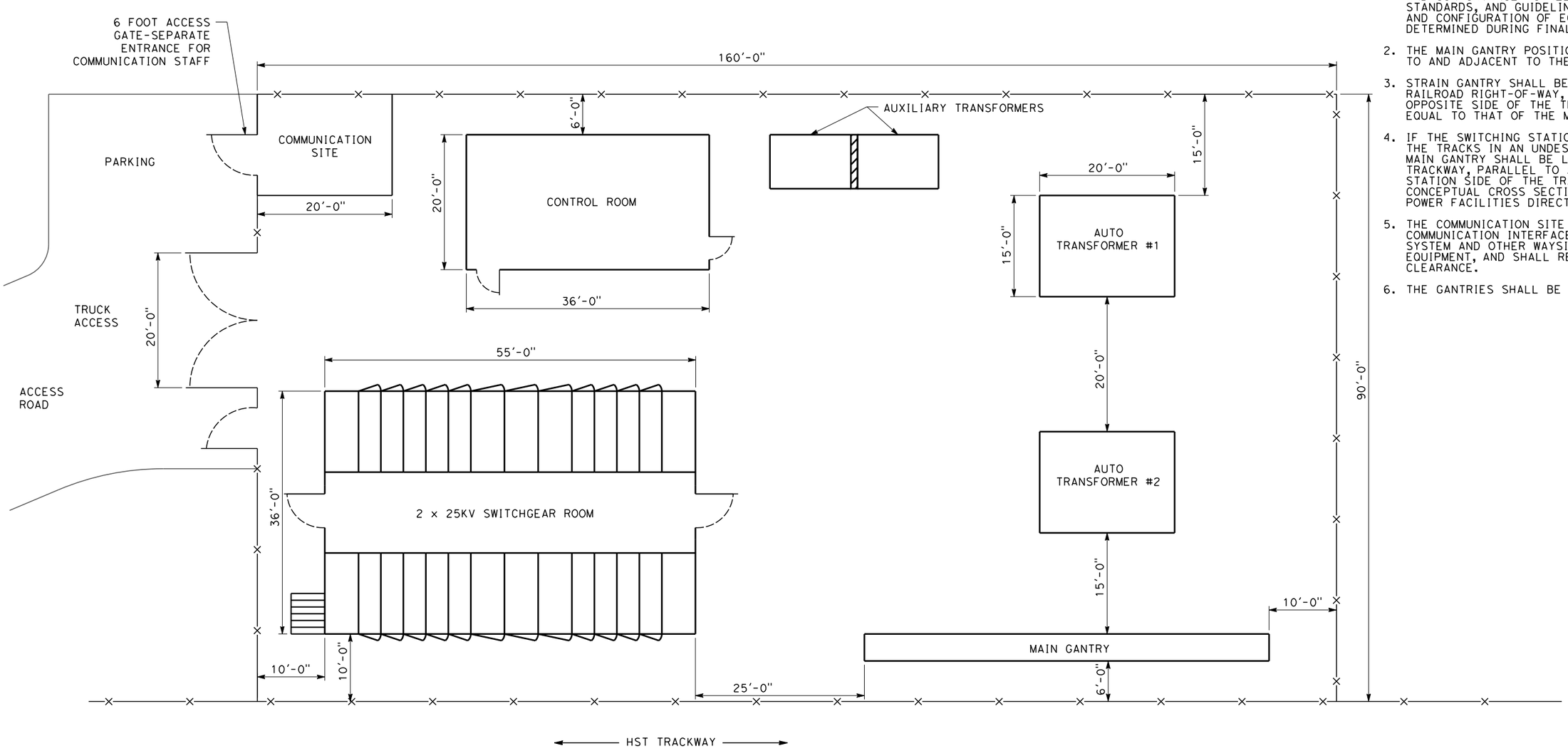

NOTES:

1. INTERNAL DIMENSIONS ARE SHOWN FOR TYPICAL EQUIPMENT SIZES. CLEARANCES AND ACCESSIBILITY FOR OPERATION AND MAINTENANCE OF EQUIPMENT AND CONFORMANCE TO RELEVANT CODES, STANDARDS, AND GUIDELINES, FINAL DIMENSIONS AND CONFIGURATION OF EQUIPMENT TO BE DETERMINED DURING FINAL SYSTEMS DESIGN.
2. THE MAIN GANTRY POSITION SHALL BE PARALLEL TO AND ADJACENT TO THE TRACKS.
3. STRAIN GANTRY SHALL BE LOCATED WITHIN THE RAILROAD RIGHT-OF-WAY, PARALLEL TO AND ON THE OPPOSITE SIDE OF THE TRACKS WITH A FOOTPRINT EQUAL TO THAT OF THE MAIN GANTRY.
4. IF THE SWITCHING STATION IS LOCATED AWAY FROM THE TRACKS IN AN UNDESIRED CONFIGURATION, THE MAIN GANTRY SHALL BE LOCATED AT THE TRACKWAY, PARALLEL TO AND TOWARDS SWITCH STATION SIDE OF THE TRACKS. REFER TO CONCEPTUAL CROSS SECTIONS OF AWAY TRACTION POWER FACILITIES DIRECTIVE DRAWINGS.
5. THE COMMUNICATION SITE SHALL HOUSE COMMUNICATION INTERFACE EQUIPMENT FOR SCADA SYSTEM AND OTHER WAYSIDE COMMUNICATION EQUIPMENT, AND SHALL REQUIRE 100' VERTICAL CLEARANCE.
6. THE GANTRIES SHALL BE 40 FEET HIGH (TYP).

RFP No. HSR 14-32 – INITIAL RELEASE - 05/27/2015

REV	DATE	BY	CHK	APP	DESCRIPTION

DESIGNED BY M. PAZ
DRAWN BY V. HUANTE
CHECKED BY V. SIBAL
IN CHARGE B. BANKS
DATE 8/29/2014

PARSONS BRINCKERHOFF

CALIFORNIA HIGH-SPEED RAIL AUTHORITY

CALIFORNIA HIGH-SPEED TRAIN PROJECT
TRACTION POWER DIRECTIVE

CONCEPTUAL LAYOUT
SWITCHING STATION

CONTRACT NO.
DRAWING NO. DD-TP-D201
SCALE NO SCALE
SHEET NO.

LaverdeV 9/30/2014 12:13:40 PM CAHSRP.tbl CHSR_PDF_half_black.plt c:\projectwise\pb\projectwiseint\laverdev\dms17831\DD-TP-D201.dgn

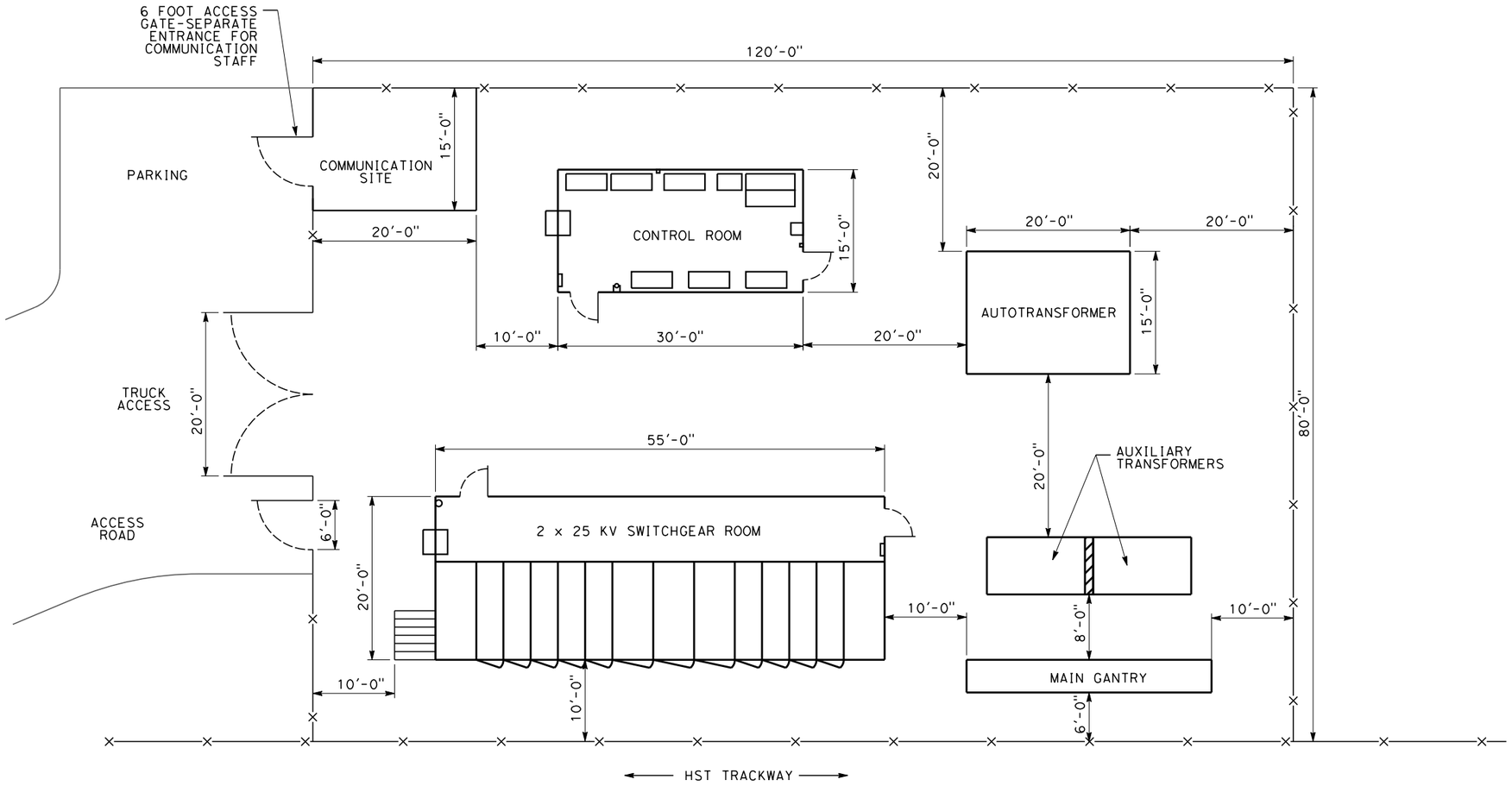

NOTES:

1. INTERNAL DIMENSIONS ARE SHOWN FOR TYPICAL EQUIPMENT SIZES. CLEARANCES AND ACCESSIBILITY FOR OPERATION AND MAINTENANCE OF EQUIPMENT CONFORMANCE TO RELEVANT CODES, STANDARDS, AND GUIDELINES, FINAL DIMENSIONS AND CONFIGURATION OF EQUIPMENT TO BE DETERMINED DURING FINAL SYSTEMS DESIGN.
2. THE MAIN GANTRY POSITION SHALL BE PARALLEL TO AND ADJACENT TO THE TRACKS.
3. STRAIN GANTRY SHALL BE LOCATED WITHIN THE RAILROAD RIGHT-OF-WAY, PARALLEL TO AND ON THE OPPOSITE SIDE OF THE TRACKS WITH FOOTPRINT EQUAL TO THAT OF THE MAIN GANTRY.
4. IF THE PARALLELING STATION (PS) IS LOCATED AWAY FROM THE TRACKS IN AN UNDESIRED CONFIGURATION, THE MAIN GANTRY SHALL BE LOCATED AT THE TRACKWAY, PARALLEL TO AND TOWARDS PS SIDE OF THE TRACKS. REFER TO CONCEPTUAL CROSS SECTIONS OF AWAY TRACTION POWER FACILITIES.
5. THE COMMUNICATION SITE SHALL HOUSE COMMUNICATION INTERFACE EQUIPMENT FOR SCADA SYSTEM AND OTHER WAYSIDE COMMUNICATION EQUIPMENT, AND SHALL REQUIRE 100' VERTICAL CLEARANCE.
6. THE GANTRIES SHALL BE 40 FEET HIGH (TYP).

RFP No. HSR 14-32 – INITIAL RELEASE - 05/27/2015

REV	DATE	BY	CHK	APP	DESCRIPTION

DESIGNED BY M. PAZ
DRAWN BY V. LAVERDE
CHECKED BY V. SIBAL
IN CHARGE B. BANKS
DATE 8/29/2014

PARSONS BRINCKERHOFF

CALIFORNIA HIGH-SPEED RAIL AUTHORITY

CALIFORNIA HIGH-SPEED TRAIN PROJECT
TRACTION POWER DIRECTIVE

CONCEPTUAL LAYOUT
PARALLELING STATION

CONTRACT NO.
DRAWING NO. DD-TP-D301
SCALE NO SCALE
SHEET NO.

LaverdeV 9/30/2014 12:15:26 PM CAHSRP.tbl CHSR_PDF_half_black.plt c:\projectwise\pb\projectwiseint\laverdev\dms17831\DD-TP-D301.dgn

NOTES:

1. THIS DRAWING SHOWS GANTRY ARRANGEMENT FOR AT-GRADE CONFIGURATION FOR TWO ALTERNATIVE OPTIONS:

   1) TPF LOCATED ADJACENT TO TRACK ALIGNMENT;
   2) TPF LOCATED AWAY FROM TRACK ALIGNMENT;
   ALTERNATIVE 1 IS THE PREFERRED OPTION. ALTERNATIVE 2 MAY BE USED IF ADEQUATE LAND IS NOT AVAILABLE ADJACENT TO RAILROAD ROW.

2. ALTERNATIVE 2 SHALL BE USED FOR TRACK ALIGNMENT ON AERIAL STRUCTURES. SEE "TYPICAL DOUBLE CATENARY FEEDING GANTRY ARRANGEMENT ON AERIAL STRUCTURE" DRAWING.

3. THE SPACING AND NUMBER OF MANHOLES IS INDICATIVE ONLY. ACTUAL LAYOUT WILL DEPEND UPON THE SITE CONDITIONS.

4. THE MAIN GANTRY AND THE STRAIN GANTRY SHALL BE TYPICALLY 4' WIDE AND 40' HIGH.

5. SEE "TYPICAL SINGLE CATENARY FEEDING GANTRY ARRANGEMENT" AND "TYPICAL DOUBLE CATENARY FEEDING GANTRY ARRANGEMENT" DIRECTIVE DRAWINGS FOR GANTRY LOCATION DETAILS.

6. CONCEPTUAL DIMENSIONS FOR MAIN AND STRAIN GANTRY FOUNDATIONS ARE APPROXIMATELY 40' LONG AND 4' WIDE.

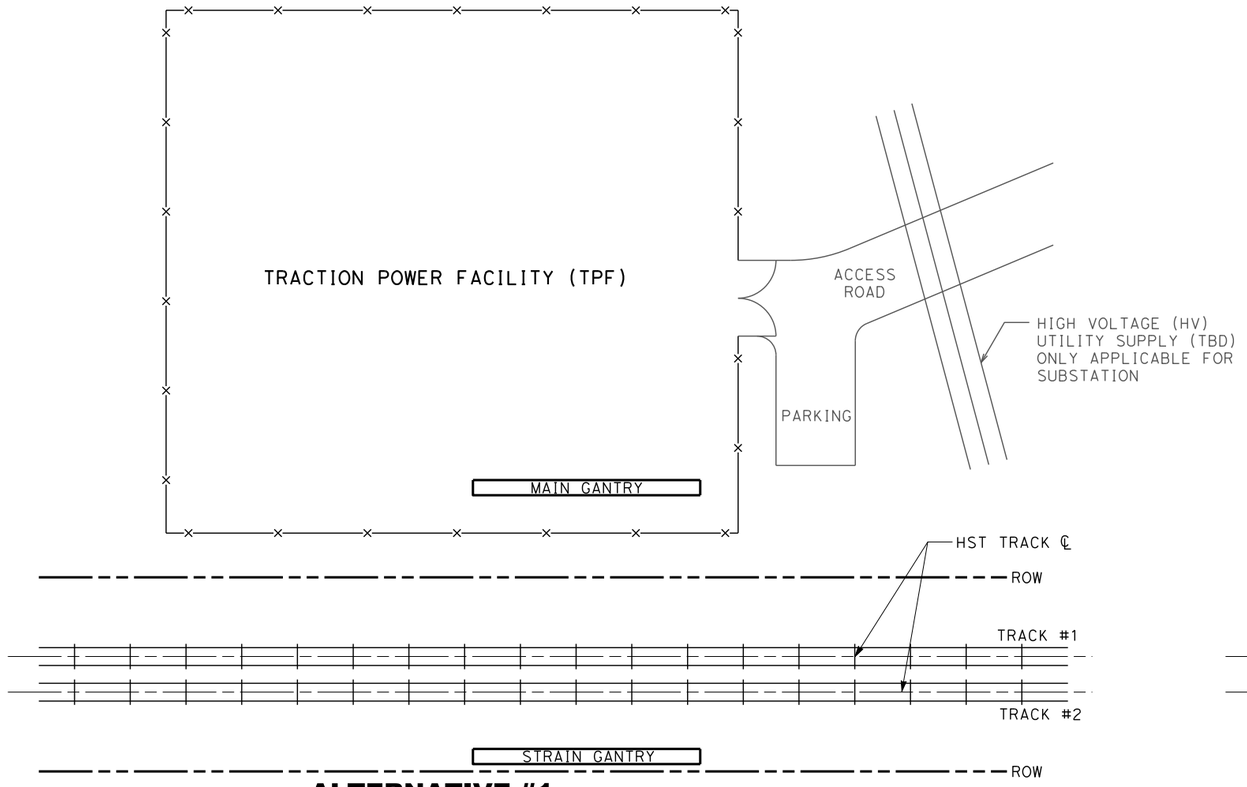

ALTERNATIVE #1

TPF LOCATED ADJACENT TO AT-GRADE HST TRACKWAY
WITH EMBANKMENT HEIGHT (TOR-OG) ≤ 10 FEET

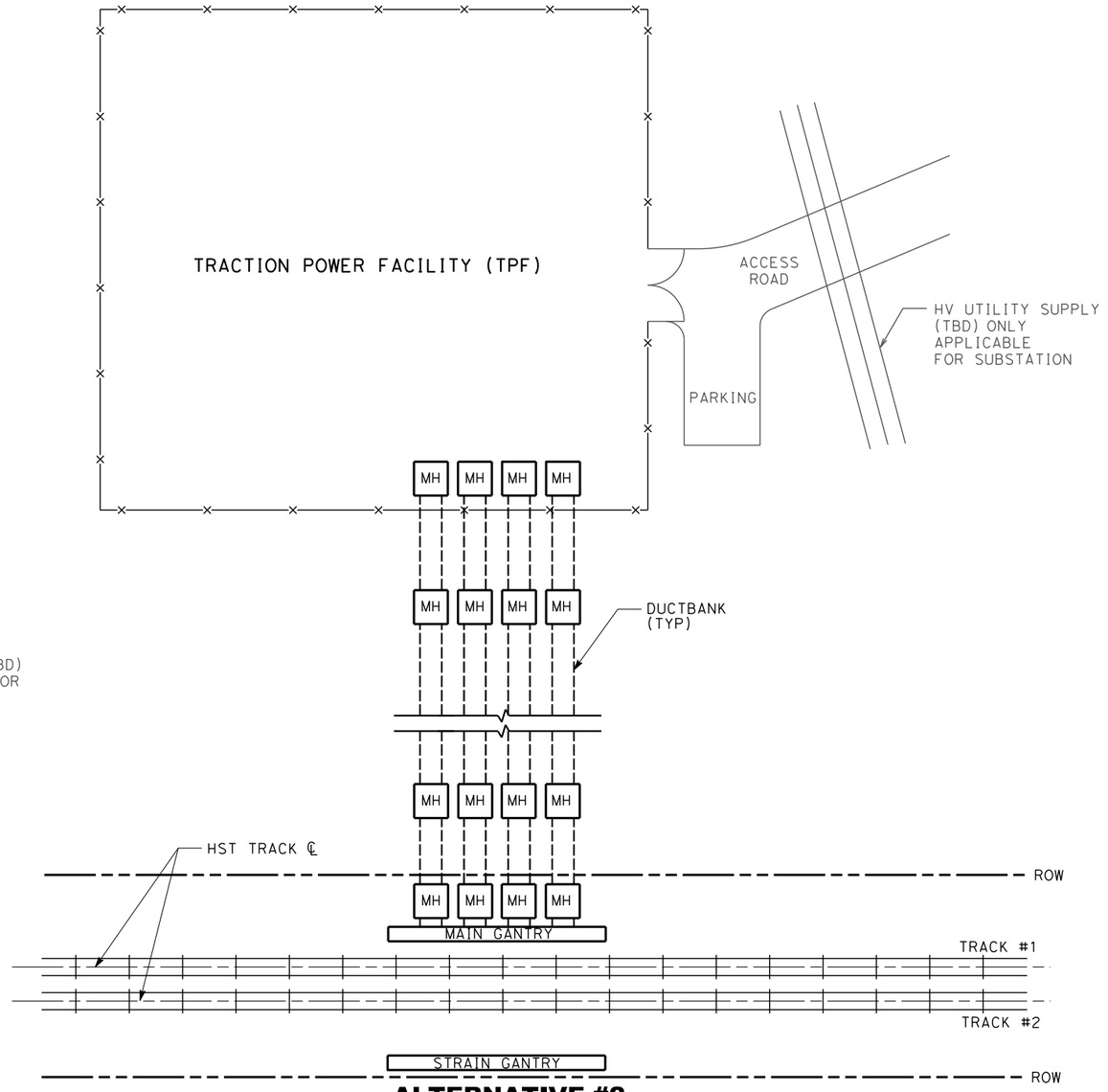

ALTERNATIVE #2

TPF LOCATED AWAY FROM AT-GRADE HST TRACKWAY
OR EMBANKMENT HEIGHT (TOR-OG) > 10 FEET

REV	DATE	BY	CHK	APP	DESCRIPTION

DESIGNED BY M. PAZ
DRAWN BY V. HUANTE
CHECKED BY V. SIBAL
IN CHARGE B. BANKS
DATE 01/24/2014

PARSONS BRINCKERHOFF

CALIFORNIA HIGH-SPEED RAIL AUTHORITY

CALIFORNIA HIGH-SPEED TRAIN PROJECT
TRACTION POWER DIRECTIVE

CONCEPTUAL LOCATIONS OF TRACTION POWER FACILITIES

CONTRACT NO. 13341
DRAWING NO. DD-TP-D401
SCALE NO SCALE
SHEET NO.

RFP No. HSR 14-32 – INITIAL RELEASE - 05/27/2015

3/30/2014 12:04:50 PM CAHSRP.tbl CHSR_half_black.plt c:\projectwise\pb\projectwiseint\mincio\dms17831\DD-TP-D401.dgn mincio

NOTES:

1. TRACK AND DRAINAGE ARE SCHEMATIC AND DO NOT REPRESENT DESIGN.
2. TYPICAL CROSS SECTIONAL WIDTH SHOWN SHALL BE PROVIDED FOR MINIMUM LENGTH EQUAL TO THE LONGITUDINAL WIDTH OF THE SYSTEMS SITE.
3. DRAWING SHOWS CROSS SECTION OF TYPICAL CATENARY FEEDING ARRANGEMENT WITH TRACTION POWER FACILITY AND TRACKWAY.
4. FOR TRACTION POWER SITE REQUIREMENTS SEE TRACTION POWER CONCEPTUAL SITE LAYOUT DIRECTIVE DRAWINGS.
5. A LOW VOLTAGE UNDERTRACK DUCTBANK TERMINATING AT LOW VOLTAGE MANHOLES SHALL BE PROVIDED AT EACH SYSTEMS SITE. SEE COMMUNICATIONS DESIGN CRITERIA MANUAL AND DIRECTIVE DRAWINGS FOR LOW VOLTAGE UNDERTRACK CONDUIT DUCTBANK AND MANHOLE REQUIREMENTS.
6. FOR ACCESS RESTRICTION FENCING AND BERM DETAILS, SEE CIVIL DIRECTIVE DRAWINGS.
7. FOR SITE DRAINAGE REQUIREMENTS, SEE DRAINAGE DIRECTIVE DRAWINGS.

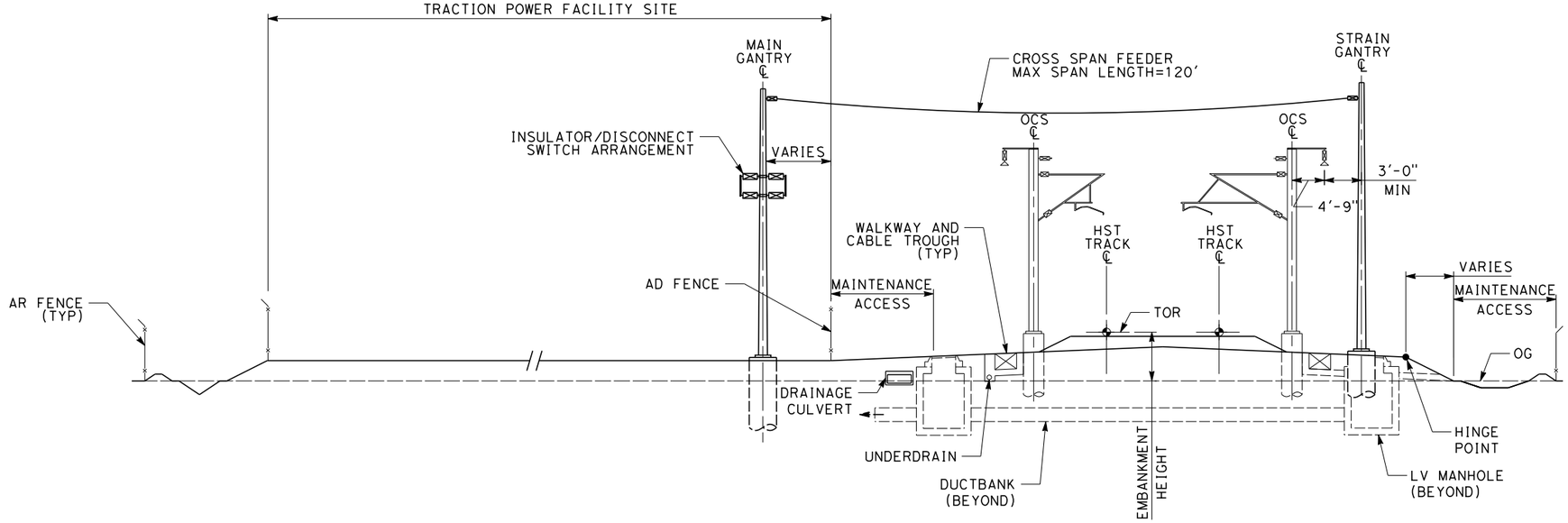

TYPICAL SECTION

TRACTION POWER FACILITY SITE ADJACENT TO AT-GRADE HST TRACKWAY WITH EMBANKMENT HEIGHT (TOR-OG) ≤ 10 FEET

RFP No. HSR 14-32 – INITIAL RELEASE - 05/27/2015

REV	DATE	BY	CHK	APP	DESCRIPTION

DESIGNED BY M.PAZ
DRAWN BY V. LAVERDE
CHECKED BY V. SIBAL
IN CHARGE B. BANKS
DATE 8/29/2014

PARSONS BRINCKERHOFF

CALIFORNIA HIGH-SPEED RAIL AUTHORITY

CALIFORNIA HIGH-SPEED TRAIN PROJECT
TRACTION POWER DIRECTIVE

TYPICAL CATENARY FEEDING GANTRY ARRANGEMENT
TRACTION POWER FACILITY SITE
ADJACENT TO TRACKWAY

CONTRACT NO.
DRAWING NO. DD-TP-F101
SCALE NO SCALE
SHEET NO.

LaverdeV 9/30/2014 12:18:21 PM CAHSRP.tbl CHSR_PDF_half_black.plt c:\projectwise\pb\projectwiseint\laverdev\dms17831\DD-TP-F101.dgn

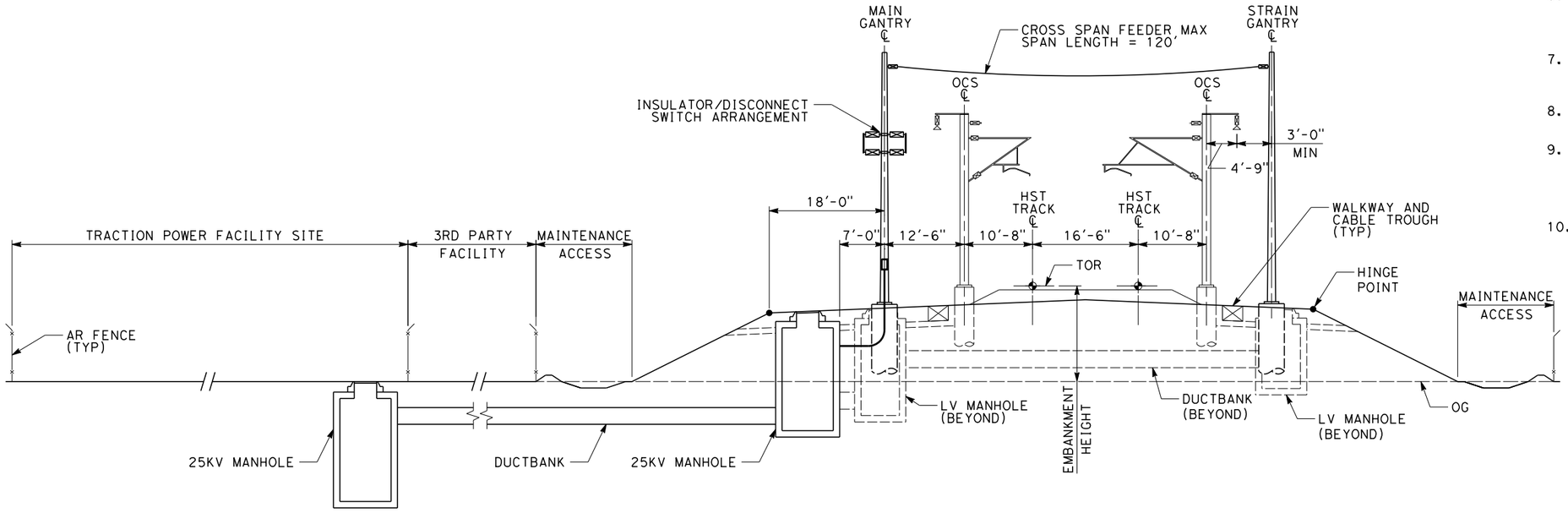

TYPICAL SECTION

TRACTION POWER FACILITY SITE AWAY FROM AT-GRADE HST TRACKWAY OR EMBANKMENT HEIGHT (TOR-OG) >10 FEET

NOTES:

1. TYPICAL CROSS SECTIONAL WIDTH SHOWN SHALL BE PROVIDED FOR MINIMUM LENGTH EQUAL TO THE LONGITUDINAL WIDTH OF THE SYSTEMS SITE.
2. SYSTEM SITES AWAY FROM TRACKWAY, SEPARATED BY A THIRD-PARTY RIGHT-OF-WAY ARE UNDESIRED. AWAY CROSS-SECTION IS ONLY APPLICABLE IF ADJACENT SOLUTION IS DEMONSTRATED TO VIOLATE SITE SPACING REQUIREMENTS OR OTHER CRITICAL CRITERIA. FOR SITE REQUIREMENTS REFER TO TRACTION POWER SITE REQUIREMENTS.
3. A LOW VOLTAGE UNDERTRACK DUCTBANK WITH 2 LOW VOLTAGE MANHOLES PROVIDED AT SYSTEMS SITE. REFER TO COMMUNICATIONS DESIGN CRITERIA MANUAL AND DIRECTIVE DRAWINGS FOR LOW VOLTAGE UNDERTRACK CONDUIT DUCTBANK AND MANHOLE REQUIREMENTS.
4. LOW VOLTAGE UNDERGROUND DUCTBANK AND MANHOLE PROVIDED UNDERNEATH 3RD PARTY RIGHT-OF-WAY TO CONNECT TO LOW VOLTAGE UNDERTRACK MANHOLES AND DUCTBANK.
5. FOUR ASSEMBLIES, EACH CONSISTING OF A 25KV UNDERGROUND DUCTBANK WITH 2 25KV MANHOLES, PROVIDED AT EACH TRACTION POWER FACILITY SEPARATED FROM THE TRACKWAY BY THIRD PARTY RIGHT-OF-WAY.
6. FOR TRACTION POWER DUCT BANKS AND MANHOLE DETAILS, REFER TO "TYPICAL 25KV DUCT BANK DETAIL" AND "TYPICAL 25KV MANHOLE DETAIL" DIRECTIVE DRAWINGS.
7. FOR TRACTION POWER SITE REQUIREMENTS, REFER TO TRACTION POWER CONCEPTUAL SITE LAYOUT DIRECTIVE DRAWINGS.
8. FOR ACCESS RESTRICTION FENCING AND BERM DETAILS, REFER TO CIVIL DIRECTIVE DRAWINGS.
9. TRACK SYSTEMS AND DRAINAGE ARE SCHEMATIC AND DO NOT REPRESENT DESIGN. FOR SITE DRAINAGE REQUIREMENTS REFER TO DRAINAGE DIRECTIVE DRAWINGS.
10. FOR ACCESS ROADS, ACCESS GATE AND ACCESS TO TRACKWAY REQUIREMENTS REFER TO SAFETY AND SECURITY DESIGN REQUIREMENTS FOR INFRASTRUCTURE ELEMENTS AND CIVIL DESIGN CRITERIA.

RFP No. HSR 14-32 – INITIAL RELEASE - 05/27/2015

REV	DATE	BY	CHK	APP	DESCRIPTION

DESIGNED BY M.PAZ
DRAWN BY V. HUANTE
CHECKED BY V. SIBAL
IN CHARGE B. BANKS
DATE 8/29/2014

PARSONS BRINCKERHOFF

CALIFORNIA HIGH-SPEED RAIL AUTHORITY

CALIFORNIA HIGH-SPEED TRAIN PROJECT
TRACTION POWER DIRECTIVE

TYPICAL CATENARY FEEDING GANTRY ARRANGEMENT
TRACTION POWER FACILITY SITE
AWAY FROM TRACKWAY

CONTRACT NO.
DRAWING NO. DD-TP-F102
SCALE NO SCALE
SHEET NO.

LaverdeV 9/30/2014 12:19:22 PM CAHSRP.tbl CHSR_PDF_half_black.plt c:\projectwise\pb\projectwiseint\laverdev\dms17831\DD-TP-F102.dgn

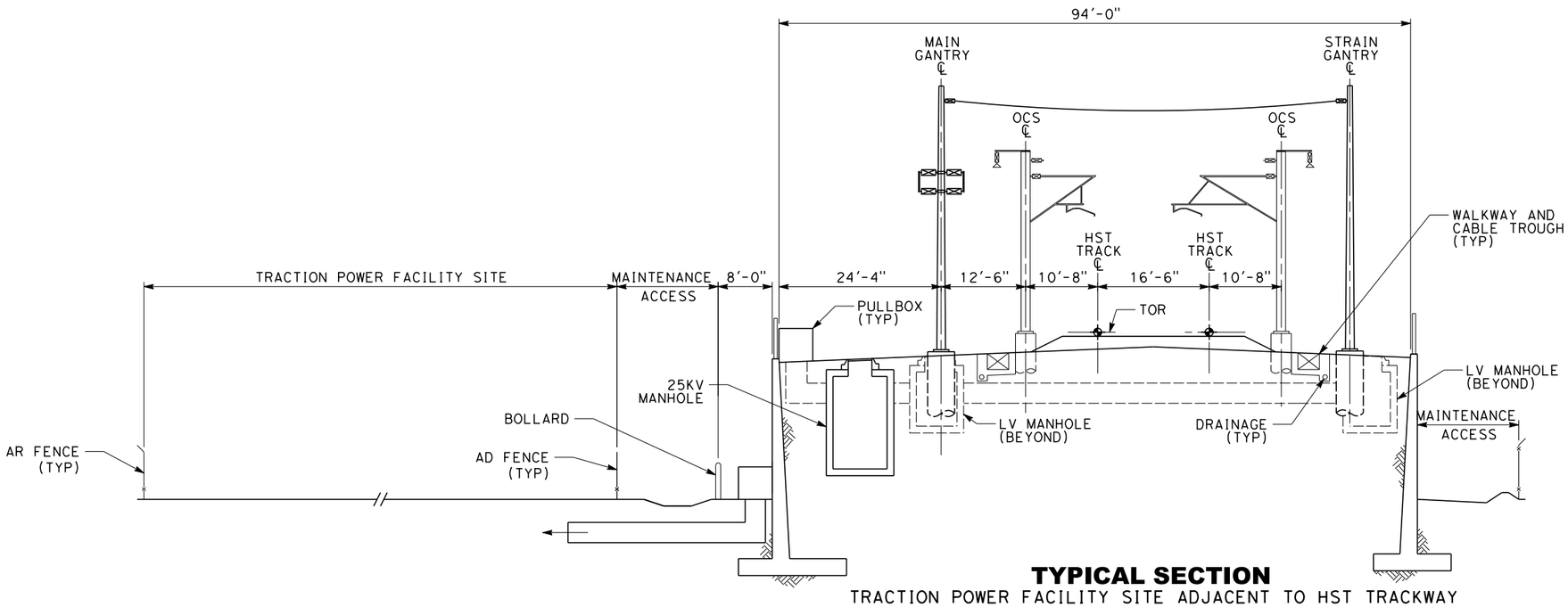

TYPICAL SECTION

TRACTION POWER FACILITY SITE ADJACENT TO HST TRACKWAY
RETAINING WALL > 10' HIGH

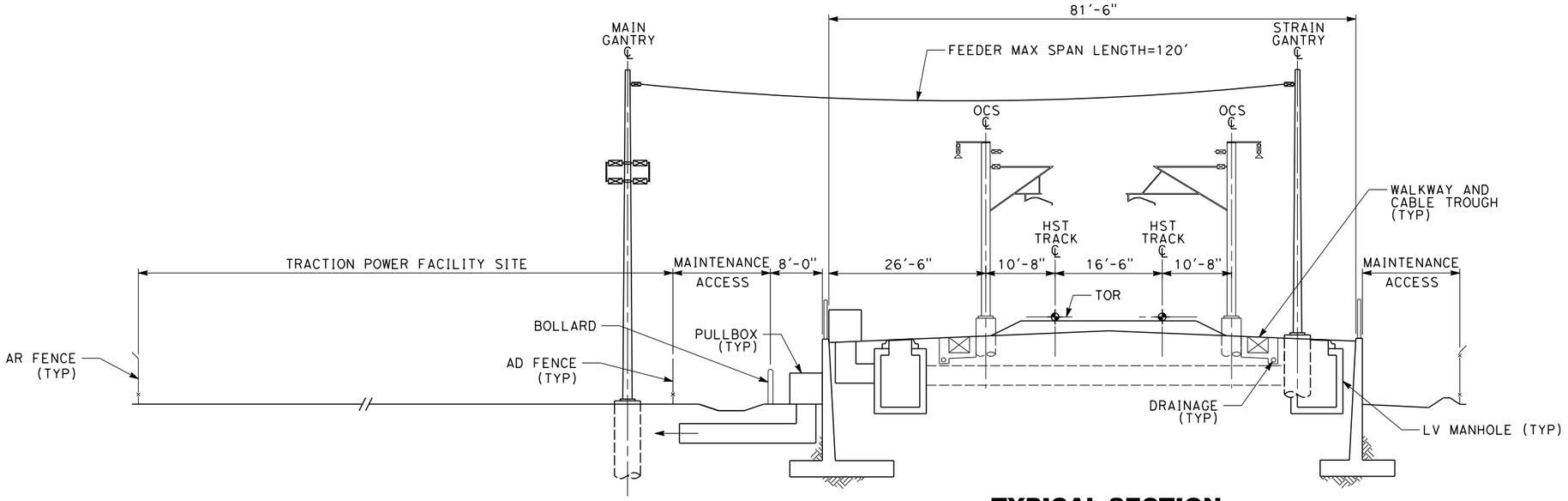

TYPICAL SECTION

TRACTION POWER FACILITY SITE ADJACENT TO HST TRACKWAY
RETAINING WALL ≤ 10' HIGH

NOTES:

1. SYSTEM SITES AT RETAINED FILL TRACKWAY ARE UNDESIRED. THESE CROSS-SECTIONS ARE ONLY APPLICABLE IF AT-GRADE SOLUTION IS DEMONSTRATED TO VIOLATE SITE SPACING REQUIREMENTS OR OTHER CRITICAL CRITERIA.
2. FOR RETAINED-FILLED TRACKWAYS, REINFORCED CONCRETE RETAINING WALLS SHALL BE USED AT SYSTEMS FACILITY SITES.
3. TYPICAL CROSS SECTIONAL WIDTH SHOWN SHALL BE PROVIDED FOR MINIMUM LENGTH EQUAL TO THE LONGITUDINAL WIDTH OF THE SYSTEMS SITE.
4. FOR ACCESS RESTRICTION FENCING AND BERM DETAILS, REFER TO CIVIL DIRECTIVE DRAWINGS.
5. TRACK SYSTEMS AND DRAINAGE ARE SCHEMATIC AND DO NOT REPRESENT DESIGN. FOR SITE DRAINAGE REQUIREMENTS REFER TO DRAINAGE DIRECTIVE DRAWINGS.
6. FOR ACCESS ROADS, ACCESS GATE AND ACCESS TO TRACKWAY REQUIREMENTS REFER TO SAFETY AND SECURITY DESIGN REQUIREMENTS FOR INFRASTRUCTURE ELEMENTS AND CIVIL DESIGN CRITERIA.
7. A LOW VOLTAGE UNDERTRACK DUCTBANK WITH 2 LOW VOLTAGE MANHOLES SHALL BE PROVIDED AT SYSTEMS SITE. REFER TO COMMUNICATIONS DESIGN CRITERIA MANUAL AND DIRECTIVE DRAWINGS FOR LOW VOLTAGE UNDERTRACK CONDUIT DUCTBANK AND MANHOLE REQUIREMENTS.
8. FOR TRACTION POWER SITE REQUIREMENTS, REFER TO TRACTION POWER CONCEPTUAL SITE LAYOUT DIRECTIVE DRAWINGS.

RFP No. HSR 14-32 – INITIAL RELEASE - 05/27/2015

REV	DATE	BY	CHK	APP	DESCRIPTION

DESIGNED BY M. PAZ
DRAWN BY V. HUANTE
CHECKED BY V. SIBAL
IN CHARGE B. BANKS
DATE 8/29/2014

PARSONS BRINCKERHOFF

CALIFORNIA HIGH-SPEED RAIL AUTHORITY

CALIFORNIA HIGH-SPEED TRAIN PROJECT
TRACTION POWER DIRECTIVE

TYPICAL CATENARY FEEDING ARRANGEMENT
IN RETAINED-FILL FOR TRACTION POWER FACILITIES
ADJACENT TO TRACKWAY

CONTRACT NO.
DRAWING NO. DD-TP-F103
SCALE NO SCALE
SHEET NO.

LaverdeV 9/30/2014 12:20:20 PM CAHSRP.tbl CHSR_PDF_half_black.plt c:\projectwise\pb\projectwiseint\laverdev\dms17831\DD-TP-F103.dgn

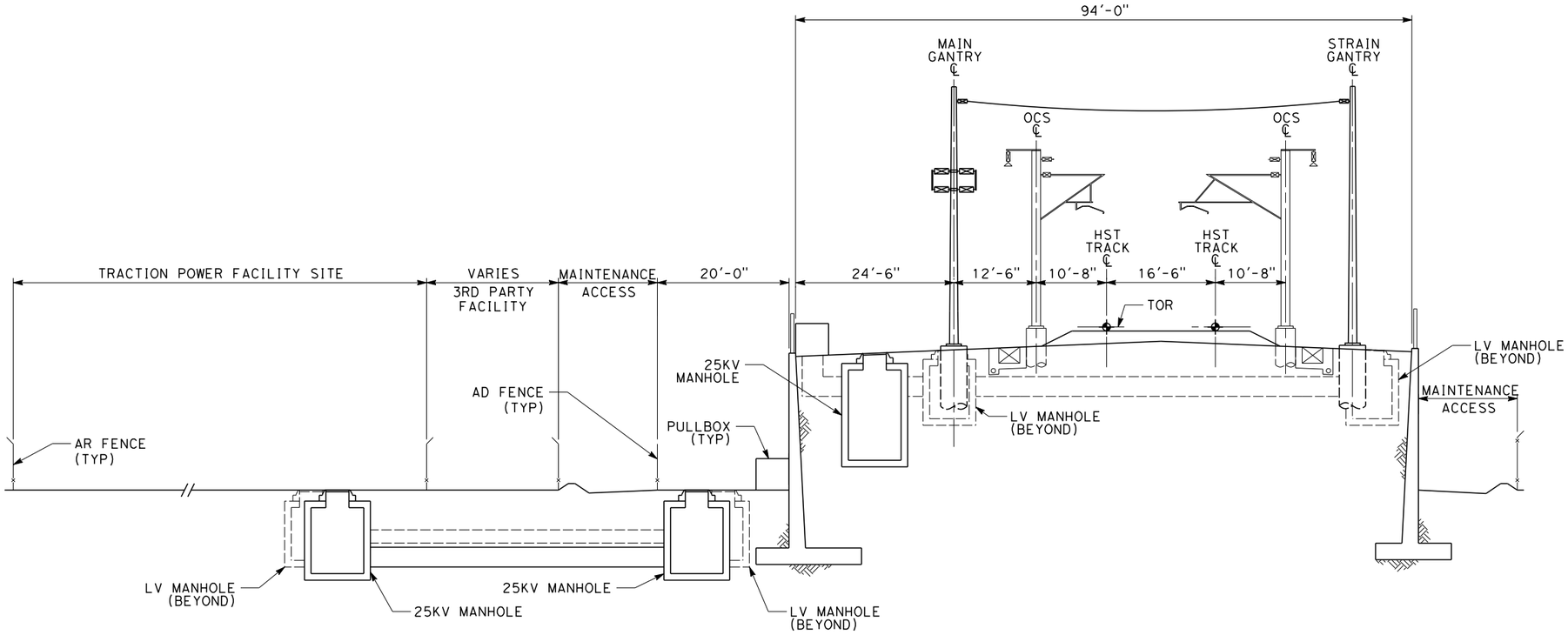

TYPICAL SECTION

TRACTION POWER FACILITY SITE AWAY FROM RETAINED-FILL HST TRACKWAY

NOTES:

1. SYSTEM SITES AT RETAINED FILL TRACKWAY ARE UNDESIRED. THESE CROSS-SECTIONS ARE ONLY APPLICABLE IF AT-GRADE SOLUTION IS DEMONSTRATED TO VIOLATE SITE SPACING REQUIREMENTS OR OTHER CRITICAL CRITERIA.
2. FOR RETAINED-FILLED TRACKWAYS, REINFORCED CONCRETE RETAINING WALLS SHALL BE USED AT SYSTEMS FACILITY SITES.
3. SYSTEM SITES AWAY FROM TRACKWAY SEPARATED BY A THIRD-PARTY RIGHT-OF-WAY ARE UNDESIRED. AWAY CROSS-SECTION IS ONLY APPLICABLE IF ADJACENT SOLUTION IS DEMONSTRATED TO VIOLATE SITE SPACING REQUIREMENTS OR OTHER CRITICAL CRITERIA.
4. TYPICAL CROSS SECTIONAL WIDTH SHOWN SHALL BE PROVIDED FOR MINIMUM LENGTH EQUAL TO THE LONGITUDINAL WIDTH OF THE SYSTEMS SITE.
5. FOR TRACTION POWER DUCT BANKS AND MANHOLE DETAILS, REFER TO "TYPICAL 25KV DUCT BANK DETAIL AND TYPICAL 25KV MANHOLE DETAIL" DIRECTIVE DRAWINGS.
6. A LOW VOLTAGE UNDERTRACK DUCTBANK WITH 2 LOW VOLTAGE MANHOLES SHALL BE PROVIDED AT SYSTEMS SITE. REFER TO COMMUNICATIONS DESIGN CRITERIA MANUAL AND DIRECTIVE DRAWINGS FOR LOW VOLTAGE UNDERTRACK CONDUIT DUCTBANK AND MANHOLE REQUIREMENTS.
7. LOW VOLTAGE UNDERGROUND DUCTBANK AND MANHOLE TO BE PROVIDED UNDERNEATH 3RD PARTY RIGHT-OF-WAY.
8. FOUR ASSEMBLIES, EACH CONSISTING OF A 25KV UNDERGROUND DUCTBANKS WITH 2 25KV MANHOLES, PROVIDED AT EACH TRACTION POWER FACILITY SEPARATED FROM THE TRACKWAY BY THIRD PARTY RIGHT-OF-WAY.
9. FOR TRACTION POWER SITE REQUIREMENTS, REFER TO TRACTION POWER CONCEPTUAL SITE LAYOUT DIRECTIVE DRAWINGS.
10. FOR ACCESS RESTRICTION FENCING AND BERM DETAILS, REFER TO CIVIL DIRECTIVE DRAWINGS.
11. TRACK SYSTEMS AND DRAINAGE ARE SCHEMATIC AND DO NOT REPRESENT DESIGN. FOR SITE DRAINAGE REQUIREMENTS REFER TO DRAINAGE DIRECTIVE DRAWINGS.
12. FOR ACCESS ROADS, ACCESS GATE AND ACCESS TO TRACKWAY REQUIREMENTS REFER TO SAFETY AND SECURITY DESIGN REQUIREMENTS FOR INFRASTRUCTURE ELEMENTS AND CIVIL DESIGN CRITERIA.

RFP No. HSR 14-32 – INITIAL RELEASE - 05/27/2015

REV	DATE	BY	CHK	APP	DESCRIPTION

DESIGNED BY M. PAZ
DRAWN BY V. HUANTE
CHECKED BY V. SIBAL
IN CHARGE B. BANKS
DATE 8/29/2014

PARSONS BRINCKERHOFF

CALIFORNIA HIGH-SPEED RAIL AUTHORITY

CALIFORNIA HIGH-SPEED TRAIN PROJECT
TRACTION POWER DIRECTIVE

TYPICAL CATENARY FEEDING ARRANGEMENT FOR TRACTION POWER FACILITIES IN RETAINED-FILL AWAY FROM TRACKWAY

CONTRACT NO.
DRAWING NO. DD-TP-F104
SCALE NO SCALE
SHEET NO.

LoverdeV 9/30/2014 12:21:30 PM CAHSRP.tbl CHSR_PDF_half_black.plt c:\projectwise\pb\projectwiseint\loverdev\dms17831\DD-TP-F104.dgn

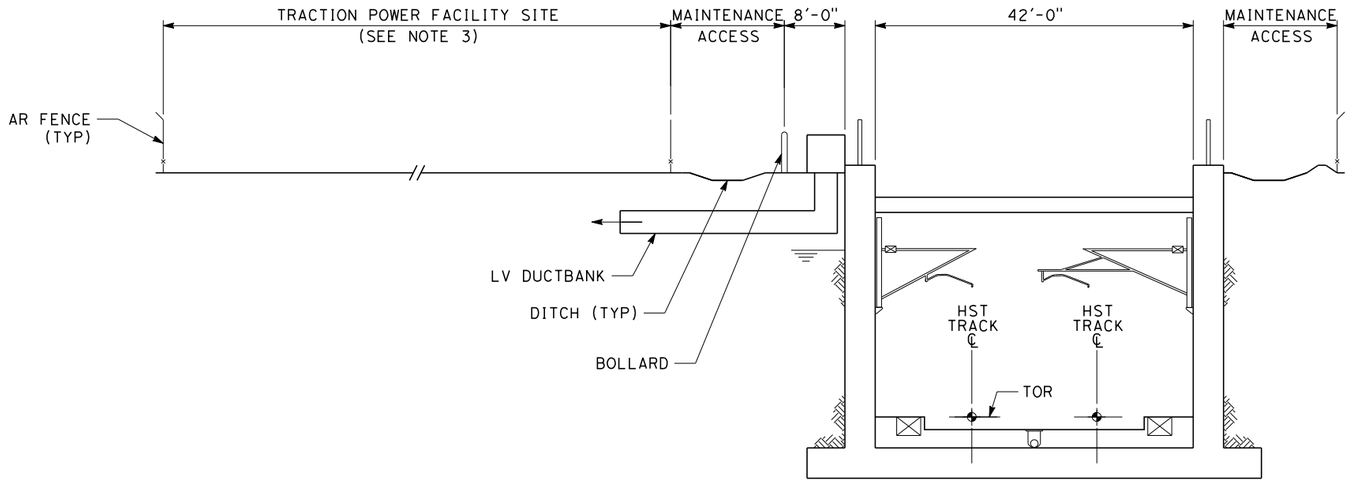

TYPICAL SECTION

TRACTION POWER FACILITY SITE ADJACENT TO TRENCH HST TRACKWAY

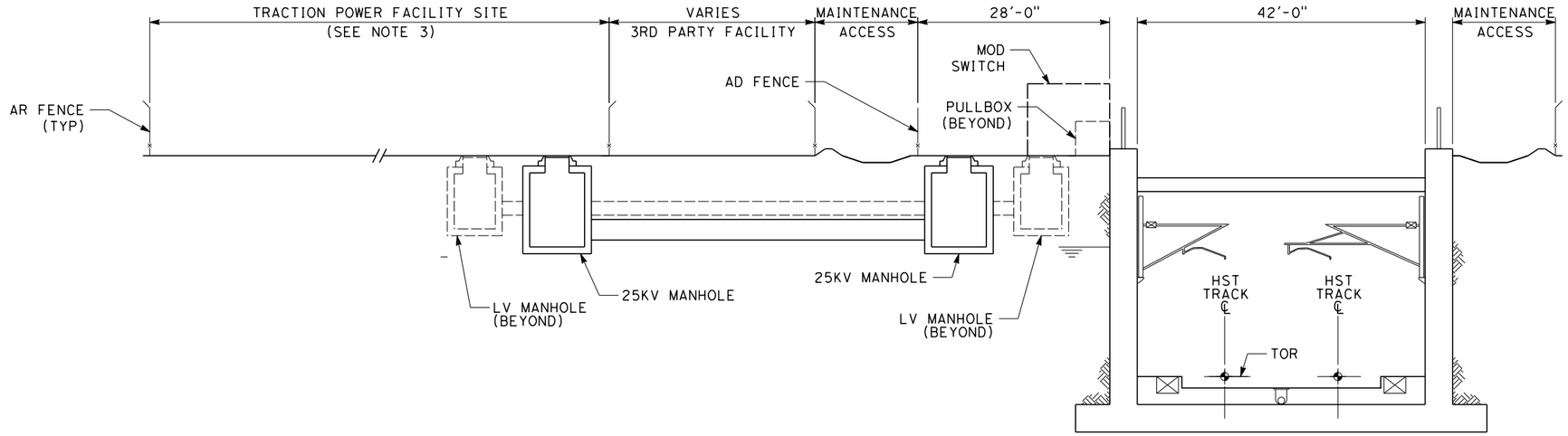

TYPICAL SECTION

TRACTION POWER FACILITY SITE AWAY FROM TRENCH HST TRACKWAY

NOTES:

1. SYSTEM SITES AT TRENCH TRACKWAY ARE UNDESIRED. THESE CROSS-SECTIONS ARE ONLY APPLICABLE IF AT-GRADE SOLUTION IS DEMONSTRATED TO VIOLATE SITE SPACING REQUIREMENTS OR OTHER CRITICAL CRITERIA.
2. FOR RETAINED-FILLED TRACKWAYS, REINFORCED CONCRETE RETAINING WALLS SHALL BE USED AT SYSTEMS FACILITY SITES.
3. SYSTEM SITES AWAY FROM TRACKWAY SEPARATED BY A THIRD PARTY RIGHT-OF-WAY ARE UNDESIRED. AWAY CROSS-SECTION IS ONLY APPLICABLE IF ADJACENT SOLUTION IS DEMONSTRATED TO VIOLATE SITE SPACING REQUIREMENTS OR OTHER CRITICAL CRITERIA.
4. TYPICAL CROSS-SECTIONAL WIDTH SHOWN SHALL BE PROVIDED FOR MINIMUM LENGTH EQUAL TO THE LONGITUDINAL WIDTH OF THE SYSTEMS SITE.
5. FOR TRACTION POWER DUCT BANKS AND MANHOLE DETAILS, REFER TO "TYPICAL 25KV DUCT BANK DETAIL" AND "TYPICAL 25KV MANHOLE DETAIL" DIRECTIVE DRAWINGS.
6. LOW VOLTAGE UNDERGROUND DUCTBANK AND MANHOLE SHALL BE PROVIDED UNDERNEATH THIRD PARTY RIGHT-OF-WAY TO CONNECT TO LOW VOLTAGE UNDERTRACK MANHOLES AND DUCTBANK. REFER TO COMMUNICATIONS DESIGN CRITERIA MANUAL AND DIRECTIVE DRAWINGS FOR LOW VOLTAGE UNDERTRACK CONDUIT DUCTBANK AND MANHOLE REQUIREMENTS.
7. FOUR ASSEMBLIES EACH CONSISTING OF 25KV UNDERGROUND DUCTBANKS WITH 2 25KV MANHOLES PROVIDED AT EACH TRACTION POWER FACILITY SEPARATED FROM THE TRACKWAY BY THIRD PARTY RIGHT-OF-WAY.
8. FOR TRACTION POWER SITE REQUIREMENTS, REFER TO TRACTION POWER CONCEPTUAL SITE LAYOUT DIRECTIVE DRAWINGS.
9. FOR ACCESS RESTRICTION FENCING AND BERM DETAILS, REFER TO CIVIL DIRECTIVE DRAWINGS.
10. TRACK SYSTEMS AND DRAINAGE ARE SCHEMATIC AND DO NOT REPRESENT DESIGN. FOR SITE DRAINAGE REQUIREMENTS REFER TO DRAINAGE DIRECTIVE DRAWINGS.
11. FOR ACCESS ROADS, ACCESS GATE AND ACCESS TO TRACKWAY REQUIREMENTS REFER TO SAFETY AND SECURITY DESIGN REQUIREMENTS FOR INFRASTRUCTURE ELEMENTS AND CIVIL DESIGN CRITERIA.

RFP No. HSR 14-32 – INITIAL RELEASE - 05/27/2015

REV	DATE	BY	CHK	APP	DESCRIPTION

DESIGNED BY M. PAZ
DRAWN BY V. HUANTE
CHECKED BY V. SIBAL
IN CHARGE B. BANKS
DATE 8/29/2014

PARSONS BRINCKERHOFF

CALIFORNIA HIGH-SPEED RAIL AUTHORITY

CALIFORNIA HIGH-SPEED TRAIN PROJECT
TRACTION POWER DIRECTIVE

SYSTEMS SITE
TRACTION POWER FACILITY
TRENCH

CONTRACT NO.
DRAWING NO. DD-TP-F105
SCALE NO SCALE
SHEET NO.

LoverdeV 9/30/2014 12:22:31 PM CAHSRP.tbl CHSR_PDF_half_black.plt c:\projectwise\pp\projectwiseint\loverdev\dms17831\DD-TP-F105.dgn

NOTES:

1. TRACTION POWER FACILITY SITES ALONG 2 TRACK OR SINGLE TRACK AERIAL TRACKWAY ARE UNDESIRED. THESE CROSS-SECTIONS ARE ONLY APPLICABLE IF AT-GRADE SOLUTION IS DEMONSTRATED TO VIOLATE SITE SPACING REQUIREMENTS OR OTHER CRITICAL CRITERIA. ADDITIONAL DUCTBANKS AND MANHOLES REQUIRED BETWEEN SINGLE TRACK AERIAL STRUCTURES AND BETWEEN TRACTION POWER FACILITY SITE AND AERIAL TRACKWAY(S).
2. DRAWING SHOWS CROSS SECTION OF TYPICAL CATENARY FEEDING ARRANGEMENT AT TRACTION POWER FACILITY AND TRACKWAY TYPICAL GANTRY FEEDING ARRANGEMENT ON AERIAL STRUCTURES AT TRACTION POWER FACILITY LOCATIONS SHOWN. HIGH VOLTAGE CABLING ROUTED OUTSIDE OF STRUCTURE.
3. THE GANTRIES WILL BE LOCATED ON THE AERIAL STRUCTURES ALONG THE ALIGNMENT AND BETWEEN ADJACENT OCS POLES.
4. TRACTION POWER FACILITY SITES AWAY FROM TRACKWAY SEPARATED BY A THIRD PARTY RIGHT-OF-WAY ARE NOT DESIRABLE. SUCH A CROSS-SECTION IS ONLY APPLICABLE IF ADJACENT SOLUTION IS DEMONSTRATED TO VIOLATE SITE SPACING REQUIREMENTS OR OTHER CRITICAL CRITERIA.
5. FOR TRACTION POWER DUCT BANKS AND MANHOLE DETAILS, REFER TO "TYPICAL 25KV DUCT BANK DETAIL" AND "TYPICAL 25KV MANHOLE DETAIL" DIRECTIVE DRAWINGS.
6. LOW VOLTAGE UNDERGROUND DUCTBANK AND MANHOLE SHALL BE PROVIDED UNDERNEATH THIRD PARTY RIGHT-OF-WAY.
7. FOUR ASSEMBLIES, EACH CONSISTING OF A 25KV UNDERGROUND DUCTBANKS WITH 2 25KV MANHOLES, SHALL BE PROVIDED AT EACH TRACTION POWER FACILITY SEPARATED FROM THE TRACKWAY BY THIRD PARTY RIGHT-OF-WAY.
8. FOR TRACTION POWER SITE REQUIREMENTS, REFER TO TRACTION POWER CONCEPTUAL SITE LAYOUT DIRECTIVE DRAWINGS.
9. FOR ACCESS RESTRICTION FENCING AND BERM DETAILS, REFER TO CIVIL DIRECTIVE DRAWINGS.
10. TRACK SYSTEMS AND DRAINAGE ARE SCHEMATIC AND DO NOT REPRESENT DESIGN. FOR SITE DRAINAGE REQUIREMENTS REFER TO DRAINAGE DIRECTIVE DRAWINGS.
11. FOR ACCESS ROADS, ACCESS GATE AND ACCESS TO TRACKWAY REQUIREMENTS REFER TO SAFETY AND SECURITY DESIGN REQUIREMENTS FOR INFRASTRUCTURE ELEMENTS AND CIVIL DESIGN CRITERIA.

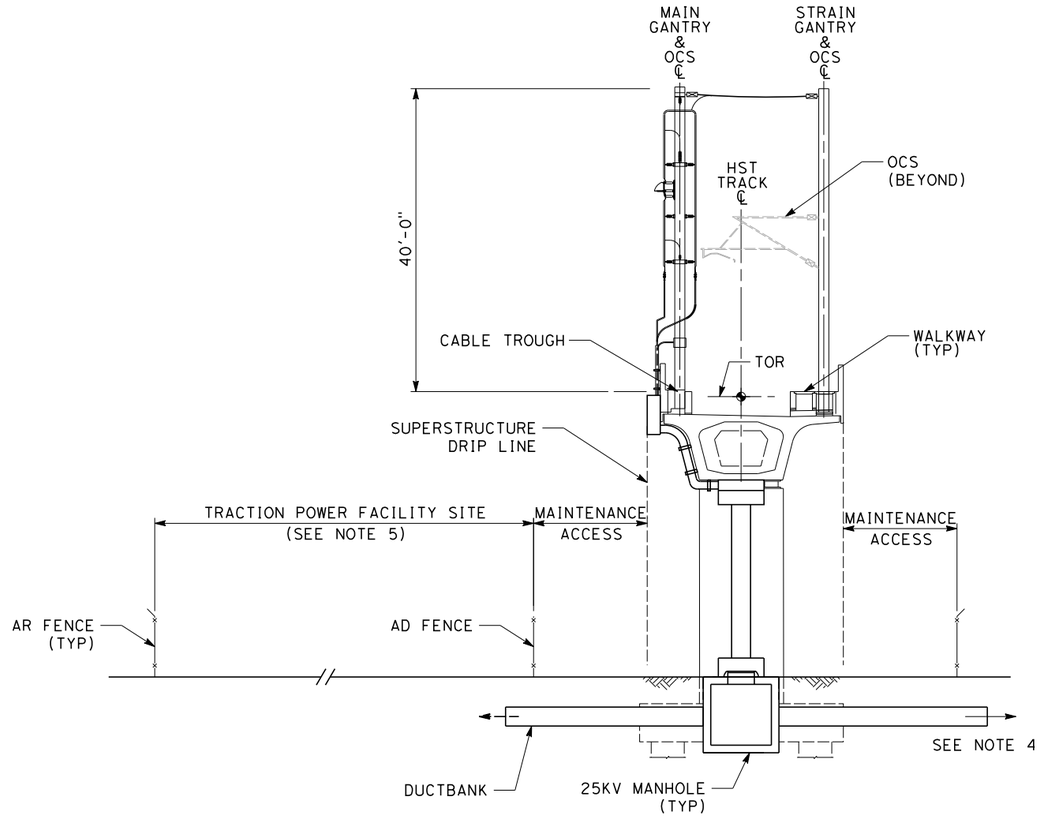

TYPICAL SECTION

TRACTION POWER FACILITY SITE AT SINGLE-TRACK AERIAL TRACKWAY

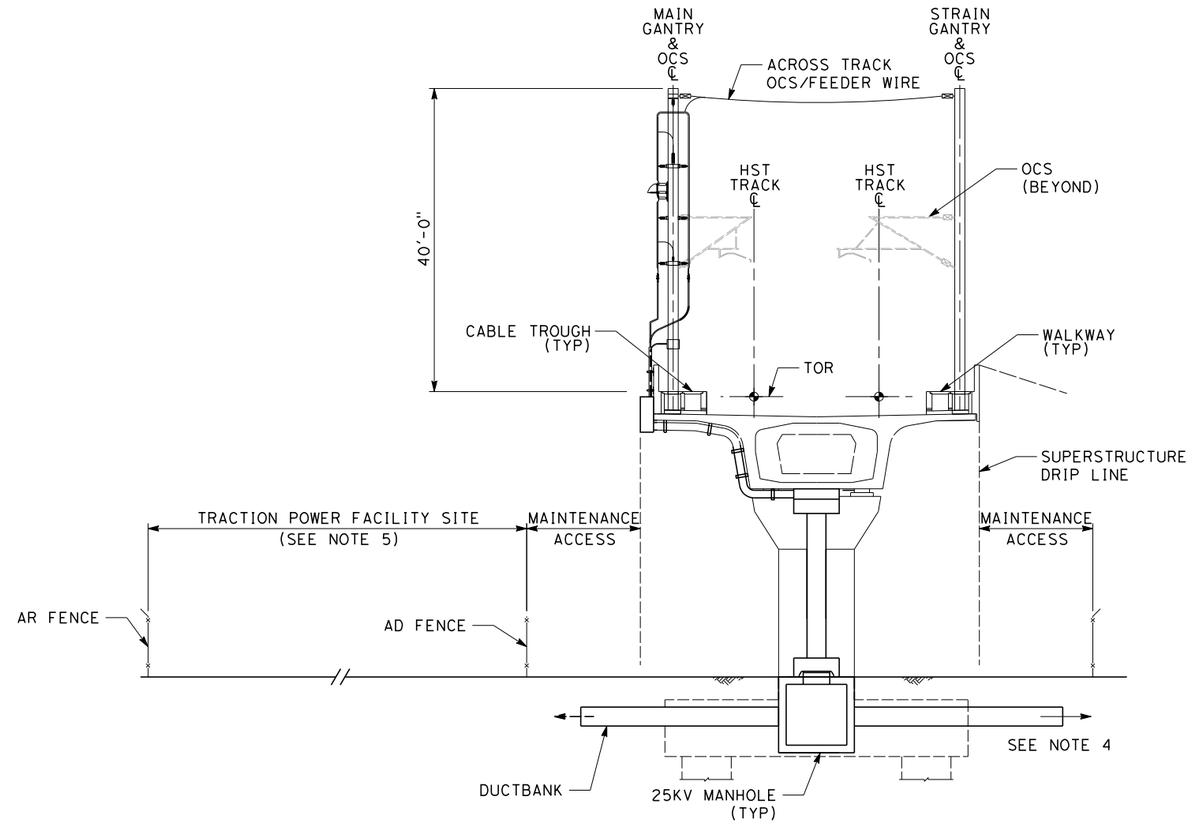

TYPICAL SECTION

TRACTION POWER FACILITY SITE AT TWO-TRACK AERIAL TRACKWAY

RFP No. HSR 14-32 – INITIAL RELEASE - 05/27/2015

REV	DATE	BY	CHK	APP	DESCRIPTION

DESIGNED BY M. PAZ
DRAWN BY V. HUANTE
CHECKED BY V. SIBAL
IN CHARGE B. BANKS
DATE 8/29/2014

PARSONS BRINCKERHOFF

CALIFORNIA HIGH-SPEED RAIL AUTHORITY

CALIFORNIA HIGH-SPEED TRAIN PROJECT
TRACTION POWER DIRECTIVE

TYPICAL CATENARY FEEDING GANTRY ARRANGEMENT ON AERIAL STRUCTURE

CONTRACT NO.
DRAWING NO. DD-TP-F201
SCALE NO SCALE
SHEET NO.

LaverdeV 9/30/2014 12:23:53 PM CAHSRP.tbl CHSR_PDF_half_black.plt c:\projectwise\pb\projectwiseint\laverdev\dms17831\DD-TP-F201.dgn

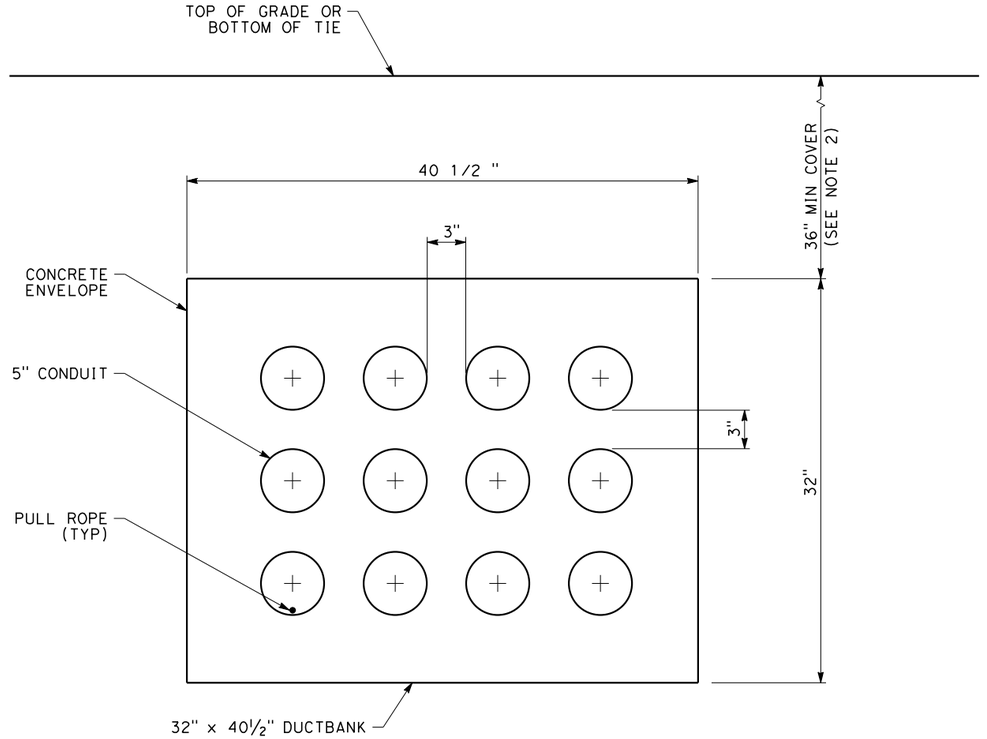

3x4-WAY DUCT BANK (1/-)

NO SCALE

NOTES:

1. THIS DRAWING SHOWS TYPICAL DUCT BANK DETAILS FOR 5" CONDUIT FOR ILLUSTRATION PURPOSES ONLY. DESIGN THE DUCT BANK TO SITE AND EQUIPMENT SPECIFIC REQUIREMENTS CONFORMING TO RELEVANT CODES, SPECIFICATIONS AND DESIGN CRITERIA.
2. A 36" MINIMUM COVER SHALL BE MAINTAINED FROM TOP OF GRADE TO TOP OF DUCT BANK, WHEN NOT GOING UNDER RAILROAD TRACK, AND A MINIMUM 5'-6" UNDER RAILROAD TRACKS FROM THE BOTTOM OF TIE.
3. THE CONDUIT MATERIAL SHALL BE PVC OR FRE.
4. 25KV CATENARY FEEDER, 25KV NEGATIVE FEEDER, TRACTION RETURN CABLING, HV/MV CABLES FOR FACILITY/AUXILIARY POWER SUPPLY, AND LOW VOLTAGE CABLES (AUXILIARY POWER SUPPLY, COMMUNICATIONS, SIGNALING AND TRAIN CONTROL) MAY BE ROUTED IN THE SAME DUCTBANK BUT IN SEPARATE CONDUITS.

RFP No. HSR 14-32 – INITIAL RELEASE - 05/27/2015

REV	DATE	BY	CHK	APP	DESCRIPTION

DESIGNED BY: M. PAZ
DRAWN BY: V. HUANTE
CHECKED BY: V. SIBAL
IN CHARGE: B. BANKS
DATE: 01/24/2014

PARSONS BRINCKERHOFF

CALIFORNIA HIGH-SPEED RAIL AUTHORITY

CALIFORNIA HIGH-SPEED TRAIN PROJECT
TRACTION POWER DIRECTIVE

TYPICAL 25KV DUCT BANK DETAIL

CONTRACT NO.
DRAWING NO. DD-TP-N101
SCALE NO SCALE
SHEET NO.

mcnallybp 1/16/2014 10:28:31 AM CAHSRP.tbl CHSR_PDF_half_black.plt c:\projectwise\pb\projectwiseint\mcnallybp\dms17831\DD-TP-N101.dgn

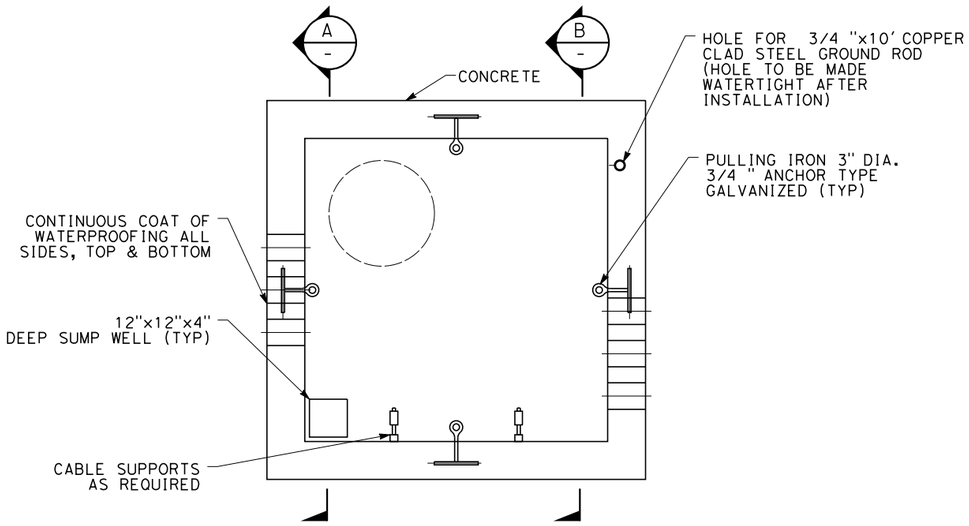

PLAN
TYPICAL PRECAST ELECTRIC MANHOLE

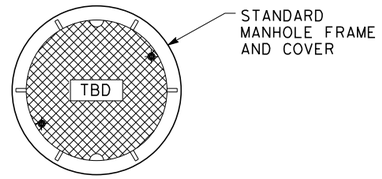

PLAN
ELECTRIC MANHOLE FRAME AND COVER DETAIL

NOTES:

1. THIS DRAWING SHOWS TYPICAL DUCT BANK KNOCKOUTS IN A PRECAST MANHOLE. EXACT DETAILS TO BE WORKED OUT AT DETAILED DESIGN LEVEL.
2. ALL TRACTION POWER MANHOLES SHALL BE TYPICALLY 10'-0"L X 10'-0"W X 10'-0" DEEP AND BE WATERTIGHT WITH SILICON SEALING COMPOUND, OR APPROVED EQUAL.
3. THE MANHOLE FRAME SHALL BE GROUTED TO THE ROOF SLAB.
4. THICKNESS OF MANHOLE WALL SHALL BE 8" MINIMUM.
5. APPROVED CABLE RACK ARMS TO BE INSTALLED TO ACCOMMODATE CABLE, MINIMUM 2 RACKS PER WALL (TYP).
6. PULLING HOOKS SHALL BE GALVANIZED STEEL, SUPPLIED AND CAST INTO WALLS BY PRECASTER,AND ANCHORED BEHIND REINFORCEMENT. QUANTITY AND LOCATION TO SUIT.
7. CONNECT ALL METALLIC PARTS, FRAME, PULLING HOOKS, ETC., TO THE TRACTION POWER FACILITY GROUND GRID OR GROUND ROD.
8. PROVIDE FOR CONNECTION TO A PORTABLE PUMP TO REMOVE ACCUMULATED WATER FROM THE MANHOLE OR OTHER SITE SPECIFIC DRAINAGE SYSTEM.
9. 25KV CATENARY FEEDER, 25KV NEGATIVE FEEDER, TRACTION RETURN CABLING, HV/MV CABLES FOR FACILITY/AUXILIARY POWER SUPPLY, AND LOW VOLTAGE CABLES (AUXILIARY POWER SUPPLY, COMMUNICATIONS, SIGNALING AND TRAIN CONTROL) SHALL BE ROUTED IN SEPARATE MANHOLES.

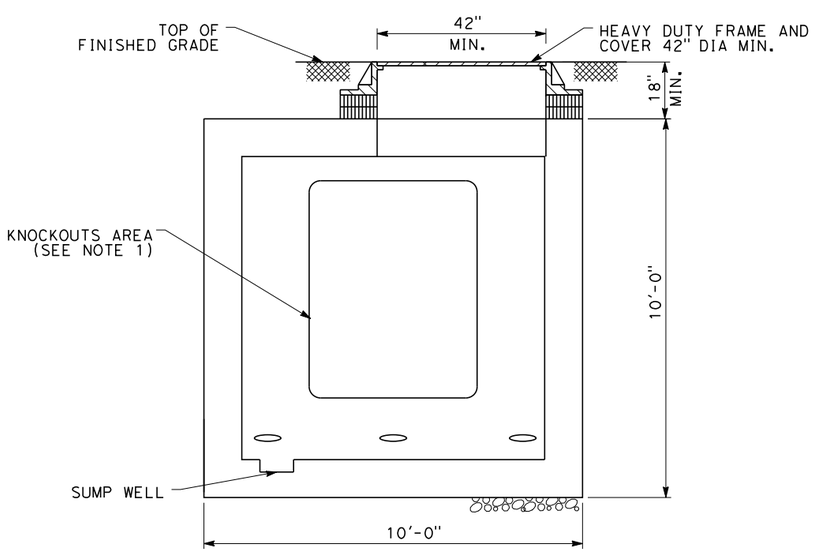

TYPICAL PRECAST ELECTRIC MANHOLE
SECTION A
NO SCALE -

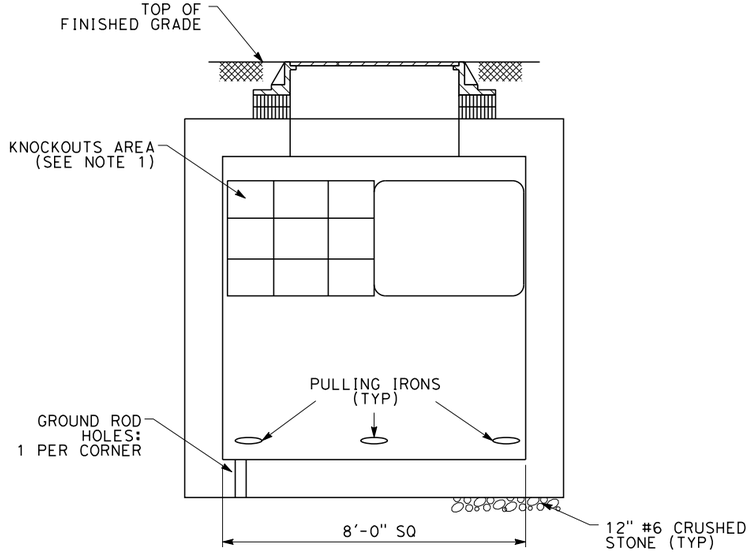

TYPICAL PRECAST ELECTRIC MANHOLE
SECTION B
NO SCALE -

REV	DATE	BY	CHK	APP	DESCRIPTION

DESIGNED BY M. PAZ
DRAWN BY V. HUANTE
CHECKED BY V. SIBAL
IN CHARGE B. BANKS
DATE 8/29/2014

PARSONS BRINCKERHOFF

CALIFORNIA HIGH-SPEED RAIL AUTHORITY

CALIFORNIA HIGH-SPEED TRAIN PROJECT
TRACTION POWER DIRECTIVE

TYPICAL 25KV MANHOLE DETAILS

CONTRACT NO.
DRAWING NO. DD-TP-N111
SCALE NO SCALE
SHEET NO.

RFP No. HSR 14-32 – INITIAL RELEASE - 05/27/2015

LaverdeV 9/30/2014 12:25:00 PM CAHSRP.tbl CHSR_PDF_half_black.plt c:\projectwise\pbprojectwiseint\laverdev\dms17831\DD-TP-N111.dgn

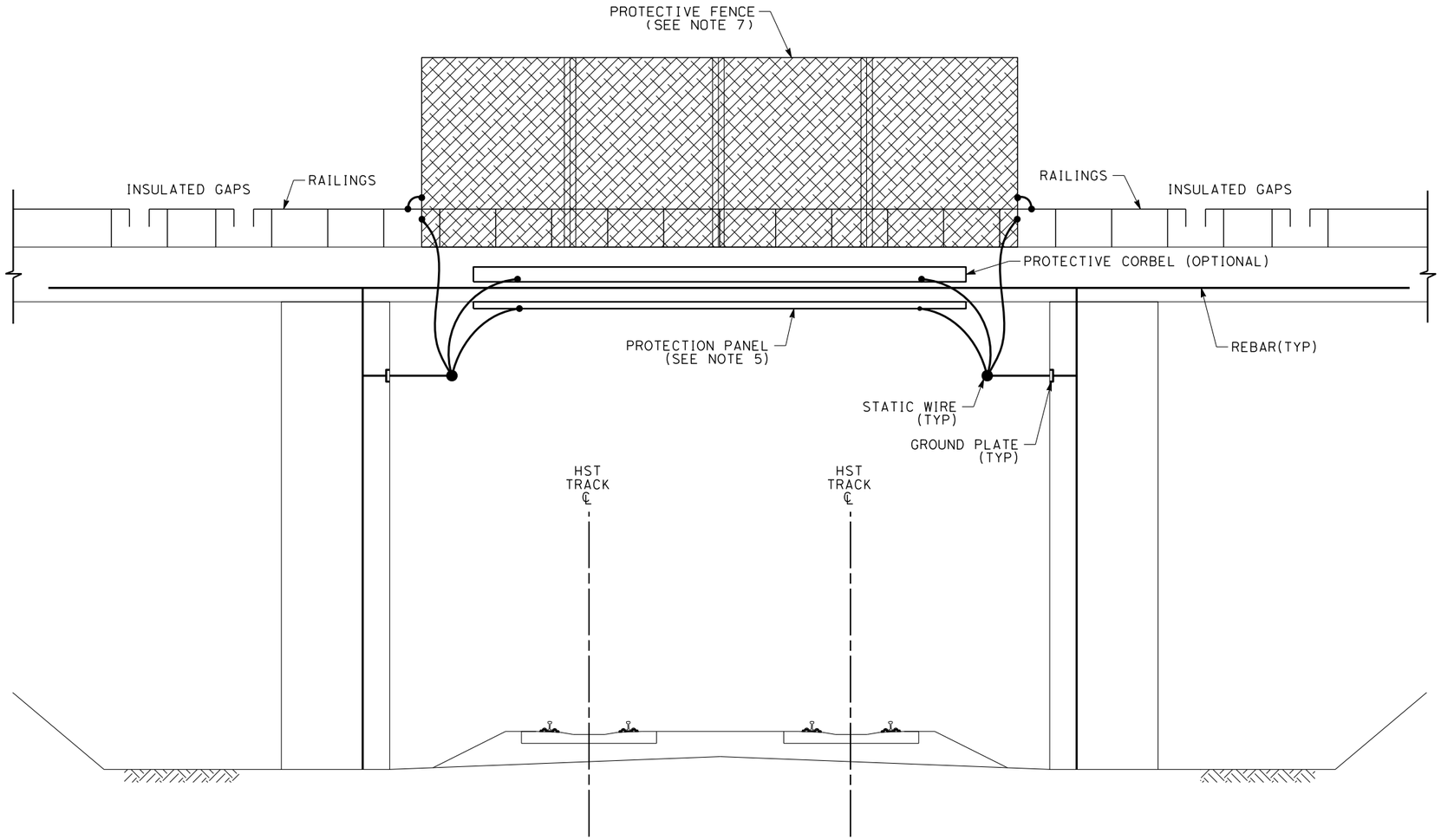

NOTES:

1. TRACK, STRUCTURES, AND DRAINAGE ARE SCHEMATIC AND DO NOT REPRESENT DESIGN.
2. SMALL METALLIC ITEMS, SUCH AS RAILING, FENCE ETC, BEYOND THE STEP AND TOUCH POTENTIAL LIMIT NEED NOT BE GROUNDED. THE STEP AND TOUCH POTENTIAL EXISTS WITHIN 8′ OF A STANDING TRAIN, 8′ FROM ANY ELECTRICALLY CONTINUOUS BONDED FENCE, AND 8′ FROM ANY METALLIC ITEM BONDED TO STATIC WIRE.
3. GROUNDING AND BONDING DETAILS DESIGN SHALL BE COORDINATED WITH OVERPASS STRUCTURE DESIGNER.
4. OVERHEAD BRIDGE GROUNDING AND BONDING DETAILS SHOWN IN DRAWING ARE GENERIC IN NATURE. THE OCS DESIGNER SHALL PROVIDE DETAILED ASSEMBLIES AND COMPONENTS THAT MEET THE REQUIREMENT.
5. GALVANIZED STEEL STRIP OR ANGLE SECTION SHALL BE INSTALLED ABOVE THE OVERHEAD LINE AT EACH BRIDGE FACE, IF THE BRIDGE SOFFIT IS WITHIN THE PANTOGRAPH ZONE. WHEN THE VERTICAL CLEARANCE BETWEEN OCS CONDUCTORS AND CONCRETE OVERPASSES IS LESS THAN 3 FEET, PROTECTION PANELS (FLASH PLATES) SHALL BE INSTALLED ABOVE THE OCS, ATTACHED TO THE UNDERSIDE OF THE STRUCTURE, AND INTERCONNECTED TO THE STATIC WIRE AT NOT LESS THAN TWO LOCATIONS.
6. THE GROUND PLATE SHALL BE NO LESS THAN 6" X 6" IN DIMENSION.
7. SEE OVERHEAD CONTACT SYSTEM AND TRACTION POWER RETURN SYSTEM AND CIVIL DESIGN CRITERIA CHAPTERS FOR PROTECTIVE FENCE CRITERIA.

TYPICAL OVERHEAD STRUCTURE GROUNDING AND BONDING

RFP No. HSR 14-32 – INITIAL RELEASE - 05/27/2015

REV	DATE	BY	CHK	APP	DESCRIPTION

DESIGNED BY J. LAU
DRAWN BY V. HUANTE
CHECKED BY M. HSIAO
IN CHARGE B. BANKS
DATE 01/24/2014

PARSONS BRINCKERHOFF

CALIFORNIA HIGH-SPEED RAIL AUTHORITY

CALIFORNIA HIGH-SPEED TRAIN PROJECT
OVERHEAD CONTACT SYSTEM DIRECTIVE

TYPICAL GROUNDING AND BONDING ARRANGEMENT
OVERHEAD BRIDGE STRUCTURE

CONTRACT NO. 13341
DRAWING NO. DD-OC-2046
SCALE NO SCALE
SHEET NO.

mincio 3/30/2014 12:12:48 PM CAHSRP.tbl CHSR_half_black.plt c:\projectwise\pb\projectwiseint\mincio\dms17830\DD-OC-2046.dgn

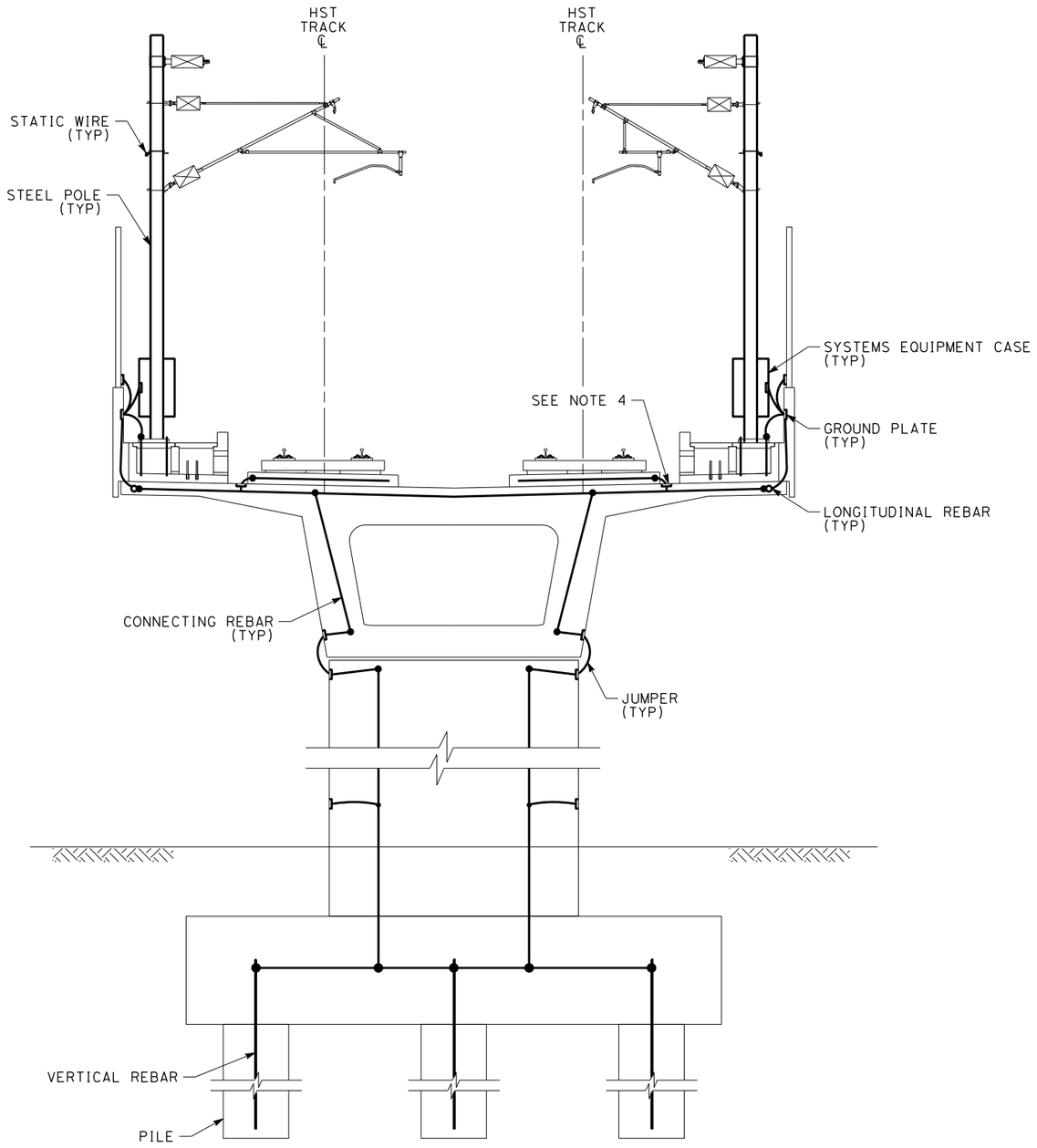

TYPICAL OCS GROUNDING AND BONDING
AT AERIAL STRUCTURE

NOTES:

1. TRACK, STRUCTURES, AND DRAINAGE ARE SCHEMATIC AND DO NOT REPRESENT DESIGN.
2. GROUNDING AND BONDING DETAIL DESIGN SHALL BE COORDINATED WITH AERIAL STRUCTURE DESIGNER.
3. THE GROUNDING AND BONDING FOR THE EMERGENCY WALKWAY AREA AND OTHER PUBLICLY ACCESSIBLE AREAS SHALL BE DESIGNED TO AVOID INADMISSIBLE TOUCH AND STEP VOLTAGES AND ALSO MEET SIGNALING OPERATION REQUIREMENTS.
4. FOR LOCATIONS OF THE GROUND PLATES, SEE GROUNDING AND BONDING DESIGN CRITERIA FOR DETAIL.
5. THE GROUND PLATES ON THE AERIAL STRUCTURE SLAB SHALL BE PLACED BETWEEN THE EDGE OF THE TRACK SLAB AND DERAILMENT WALL.
6. THE GROUND PLATE SHALL BE NO LESS THAN 6"X6" IN DIMENSION.
7. INDIVIDUAL CONCRETE TIES DO NOT NEED TO BE BONDED TO THE TRACTION POWER RETURN SYSTEM. STEEL REINFORCEMENT IN PRECAST CONCRETE PANELS FOR DIRECT FIXATION TRACK SHALL BE BONDED AND CONNECTED TO THE TRACTION POWER RETURN SYSTEM.
8. STEEL REINFORCED CONCRETE PARAPETS AND CONDUCTIVE SCREEN, NOISE, WIND OR SAFETY BARRIERS OR RAILINGS SHALL BE BONDED TO THE TRACTION POWER RETURN SYSTEM.

RFP No. HSR 14-32 – INITIAL RELEASE - 05/27/2015

REV	DATE	BY	CHK	APP	DESCRIPTION

DESIGNED BY J. LAU
DRAWN BY V. HUANTE
CHECKED BY M. HSIAO
IN CHARGE B. BANKS
DATE 01/24/2014

PARSONS BRINCKERHOFF

CALIFORNIA HIGH-SPEED RAIL AUTHORITY

CALIFORNIA HIGH-SPEED TRAIN PROJECT
OVERHEAD CONTACT SYSTEM DIRECTIVE

TYPICAL GROUNDING AND BONDING ARRANGEMENT
AERIAL STRUCTURE

CONTRACT NO.
DRAWING NO. DD-OC-2047
SCALE NO SCALE
SHEET NO.

3/30/2014 12:09:38 PM CAHSRP.tbl CHSR_half_black.plt c:\projectwise\pb\projectwiseint\mincio\dms17830\DD-OC-2047.dgn
mincio

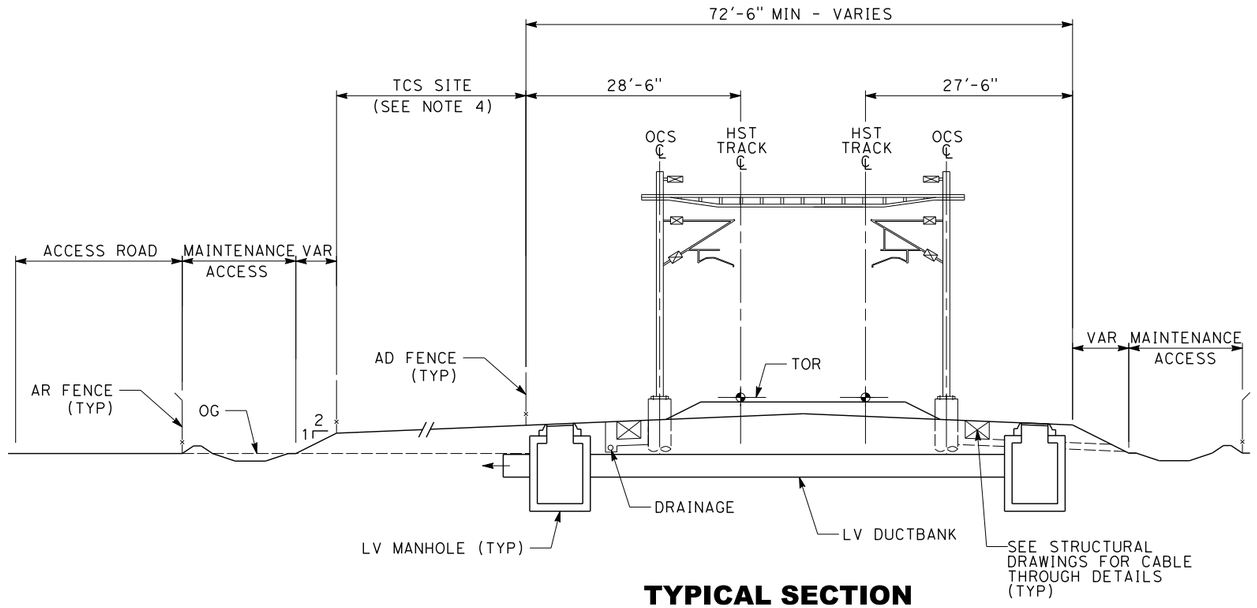

TYPICAL SECTION

TCS SITE ADJACENT TO AT-GRADE HST TRACKWAY

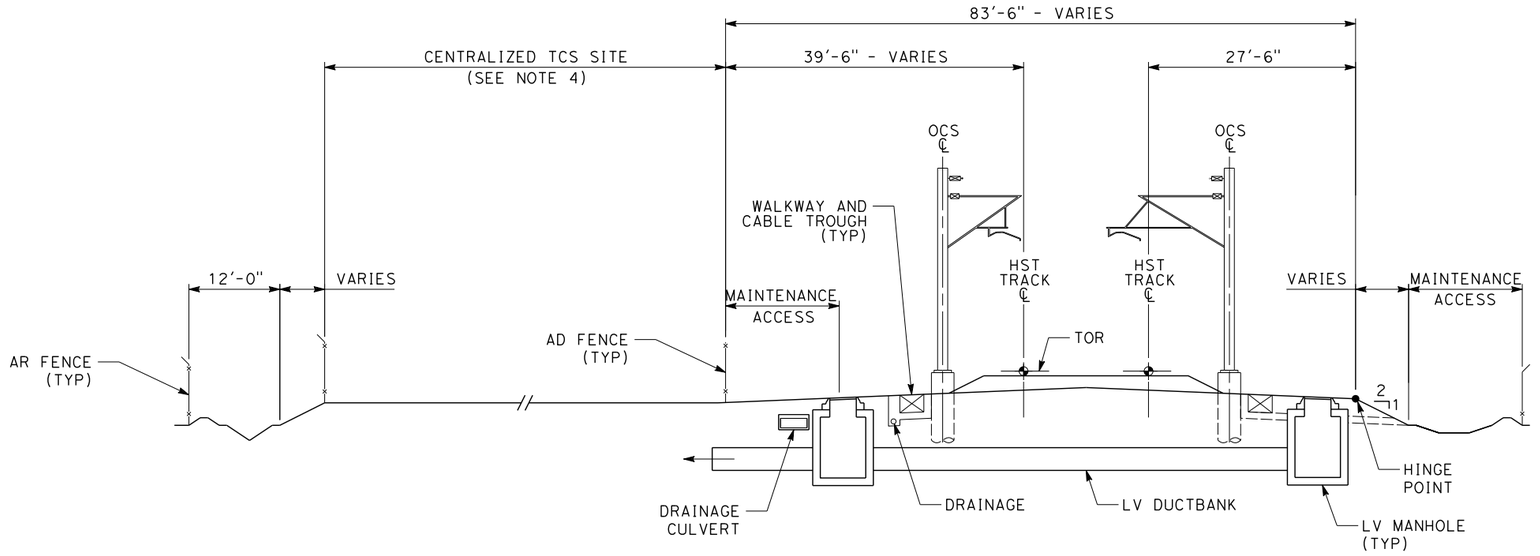

TYPICAL SECTION

CENTRALIZED TCS SITE ADJACENT TO AT-GRADE HST TRACKWAY

NOTES:

1. TYPICAL CROSS SECTIONAL WIDTH SHOWN SHALL BE PROVIDED FOR MINIMUM LENGTH EQUAL TO THE LONGITUDINAL WIDTH OF THE CENTRALIZED TRAIN CONTROL SITE OR FOR THE LONGITUDINAL DISTANCE BETWEEN FURTHEST TRAIN CONTROL SITES AT AN INTERLOCKING.
2. FOR TRAIN CONTROL SITE REQUIREMENTS REFER TO TYPICAL TRAIN CONTROL SITES LAYOUT DIRECTIVE DRAWINGS.
3. A LOW VOLTAGE UNDERTRACK DUCTBANK WITH 2 LOW VOLTAGE MANHOLES PROVIDED AT EACH SYSTEMS SITE. REFER TO COMMUNICATIONS DESIGN CRITERIA MANUAL AND DIRECTIVE DRAWINGS FOR LOW VOLTAGE UNDERTRACK CONDUIT DUCTBANK AND MANHOLE REQUIREMENTS.
4. FOR ACCESS RESTRICTION FENCING AND BERM DETAILS, REFER TO CIVIL DIRECTIVE DRAWINGS.
5. TRACK SYSTEMS AND DRAINAGE ARE SCHEMATIC AND DO NOT REPRESENT DESIGN. FOR SITE DRAINAGE REQUIREMENTS REFER TO DRAINAGE DIRECTIVE DRAWINGS.
6. FOR ACCESS ROADS, ACCESS GATE AND ACCESS TO TRACKWAY REQUIREMENTS REFER TO SAFETY AND SECURITY DESIGN REQUIREMENTS FOR INFRASTRUCTURE ELEMENTS AND CIVIL DESIGN CRITERIA.

RFP No. HSR 14-32 – INITIAL RELEASE - 05/27/2015

REV	DATE	BY	CHK	APP	DESCRIPTION

DESIGNED BY I. MUFTIC
DRAWN BY V. LAVERDE
CHECKED BY B. MCNALLY
IN CHARGE B. BANKS
DATE 8/29/2014

PARSONS BRINCKERHOFF

CALIFORNIA HIGH-SPEED RAIL AUTHORITY

CALIFORNIA HIGH-SPEED TRAIN PROJECT
TRAIN CONTROL DIRECTIVE

SYSTEMS SITE
TCS
AT GRADE

CONTRACT NO.
DRAWING NO. DD-TC-100
SCALE NO SCALE
SHEET NO.

Mincio 9/30/2014 12:17:05 PM CAHSRP.TBL CHSR_half_black.plt C:\Users\mincio\Desktop\New folder (3)\DD-TC-100.dgn

NOTES:

1. SYSTEM SITES AT AERIAL TRACKWAY ARE UNDESIRED. THESE CROSS-SECTIONS ARE ONLY APPLICABLE IF AT-GRADE SOLUTION IS DEMONSTRATED TO VIOLATE SITE SPACING REQUIREMENTS OR OTHER CRITICAL CRITERIA.
2. FOR ACCESS RESTRICTION FENCING AND BERM DETAILS, REFER TO CIVIL DIRECTIVE DRAWINGS.
3. TRACK SYSTEMS AND DRAINAGE ARE SCHEMATIC AND DO NOT REPRESENT DESIGN. FOR SITE DRAINAGE REQUIREMENTS REFER TO DRAINAGE DIRECTIVE DRAWINGS.
4. FOR ACCESS ROADS, ACCESS GATE AND ACCESS TO TRACKWAY REQUIREMENTS REFER TO SAFETY AND SECURITY DESIGN REQUIREMENTS FOR INFRASTRUCTURE ELEMENTS AND CIVIL DESIGN CRITERIA.
5. TYPICAL CROSS SECTIONAL WIDTH SHOWN SHALL BE PROVIDED FOR MINIMUM LENGTH EQUAL TO THE LONGITUDINAL WIDTH OF THE CENTRALIZED TRAIN CONTROL SITE OR FOR THE LONGITUDINAL DISTANCE BETWEEN FURTHEST TRAIN CONTROL SITES AT AN INTERLOCKING.
6. FOR TRAIN CONTROL SITE REQUIREMENTS REFER TO TYPICAL TRAIN CONTROL SITES LAYOUT DIRECTIVE DRAWINGS.

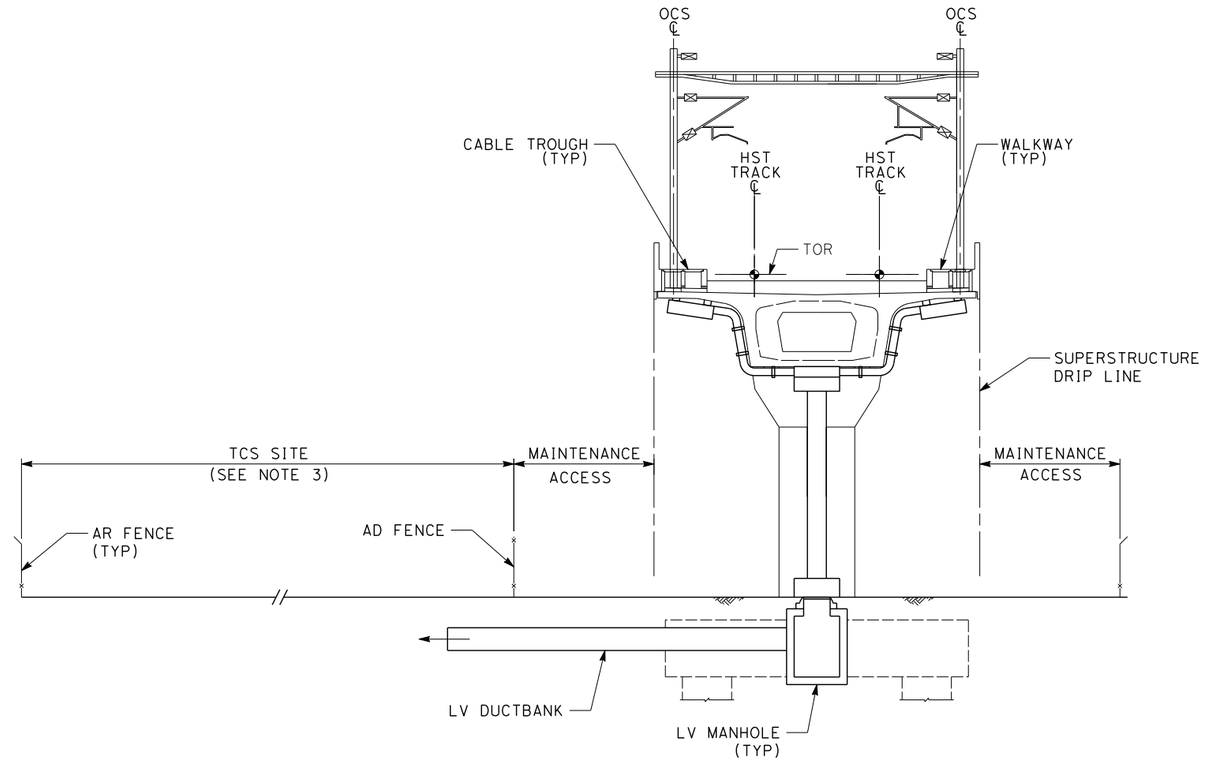

TYPICAL SECTION
TCS SITE AT AERIAL TRACKWAY

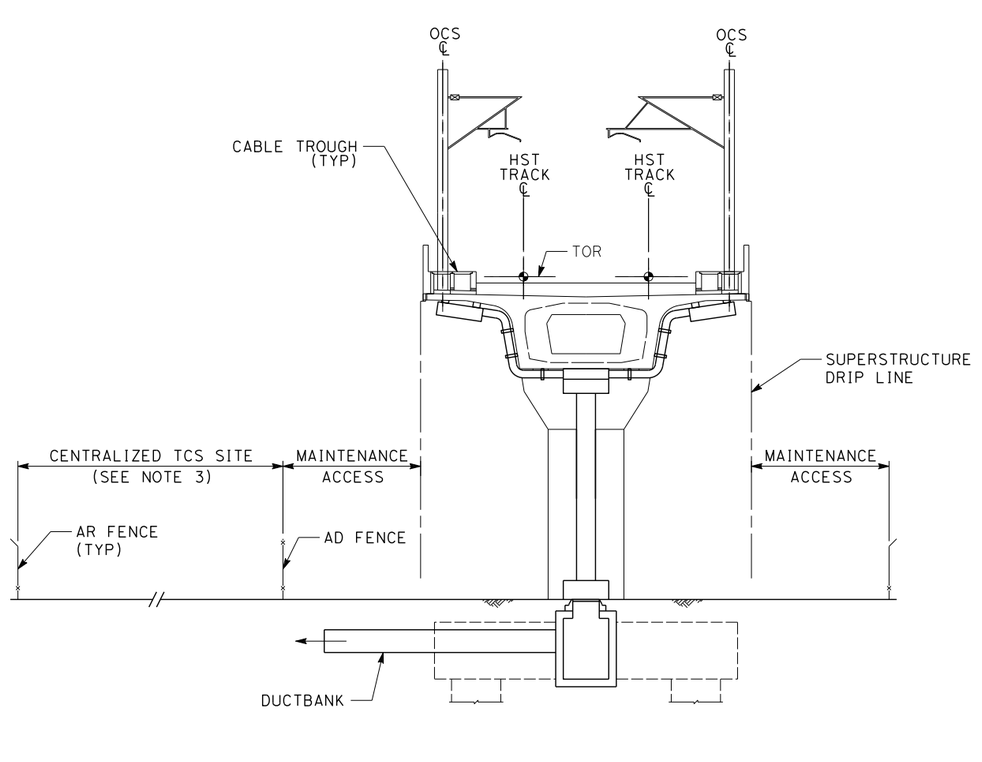

TYPICAL SECTION
CENTRALIZED TCS SITE AT AERIAL TRACKWAY

REV	DATE	BY	CHK	APP	DESCRIPTION

DESIGNED BY I. MUFTIC
DRAWN BY V. LAVERDE
CHECKED BY B. MCNALLY
IN CHARGE B. BANKS
DATE 8/29/2014

PARSONS BRINCKERHOFF

CALIFORNIA HIGH-SPEED RAIL AUTHORITY

CALIFORNIA HIGH-SPEED TRAIN PROJECT
TRAIN CONTROL DIRECTIVE

SYSTEMS SITE
TCS
AERIAL

CONTRACT NO.
DRAWING NO. DD-TC-101
SCALE NO SCALE
SHEET NO.

RFP No. HSR 14-32 – INITIAL RELEASE - 05/27/2015

9/30/2014 12:17:07 PM CAHSRP_TBL CHSR_half_black.plt C:\Users\vincio\Desktop\New folder (3)\DD-TC-101.dgn Vincio

NOTES:

1. TYPICAL CROSS SECTIONAL WIDTH SHOWN SHALL BE PROVIDED FOR MINIMUM LENGTH EQUAL TO THE LONGITUDINAL WIDTH OF THE TRAIN CONTROL SITE D OR FOR THE LONGITUDINAL DISTANCE BETWEEN FURTHEST TRAIN CONTROL SITES AT AN INTERLOCKING.
2. FOR TRAIN CONTROL SITE REQUIREMENTS REFER TO TYPICAL TRAIN CONTROL SITES LAYOUT DIRECTIVE DRAWINGS.

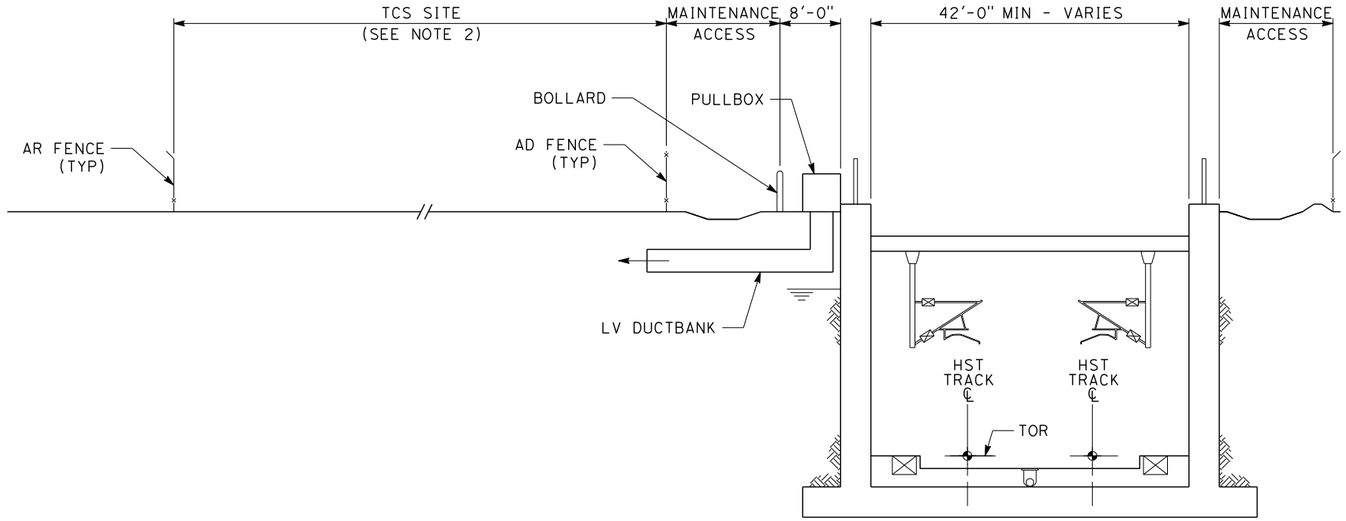

TYPICAL SECTION

TCS SITE ADJACENT TO HST TRACKWAY
TRENCH

RFP No. HSR 14-32 – INITIAL RELEASE - 05/27/2015

REV	DATE	BY	CHK	APP	DESCRIPTION

DESIGNED BY: I. MUFTIC
DRAWN BY: V. HUANTE
CHECKED BY: B. MCNALLY
IN CHARGE: B. BANKS
DATE: 8/29/2014

PARSONS BRINCKERHOFF

CALIFORNIA HIGH-SPEED RAIL AUTHORITY

CALIFORNIA HIGH-SPEED TRAIN PROJECT
AUTOMATIC TRAIN DIRECTIVE

SYSTEMS SITE
TCS
TRENCH

CONTRACT NO.
DRAWING NO. DD-TC-102
SCALE NO SCALE
SHEET NO.

Mincio 9/30/2014 12:17:09 PM CAHSRP_TBL CHSR_half_black.plt C:\Users\mincio\Desktop\New folder (3)\DD-TC-102.dgn

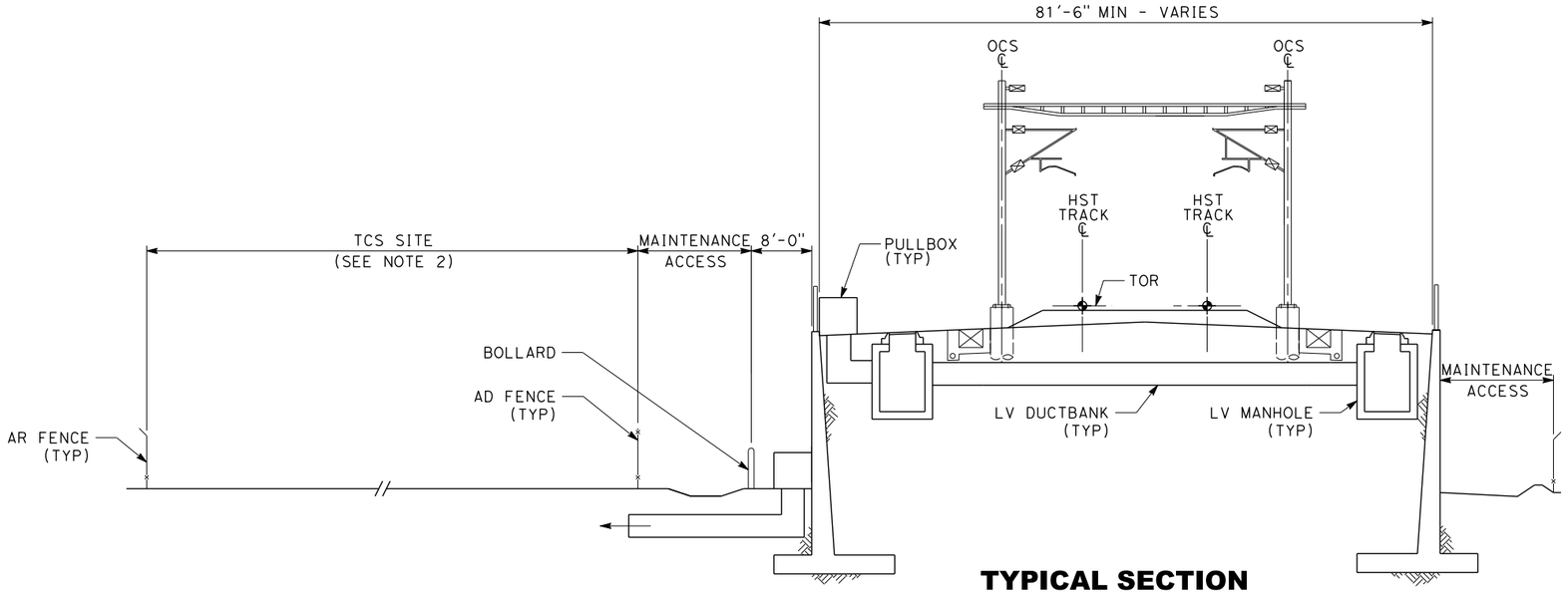

TYPICAL SECTION
TCS SITE ADJACENT TO HST TRACKWAY
RETAINING WALL

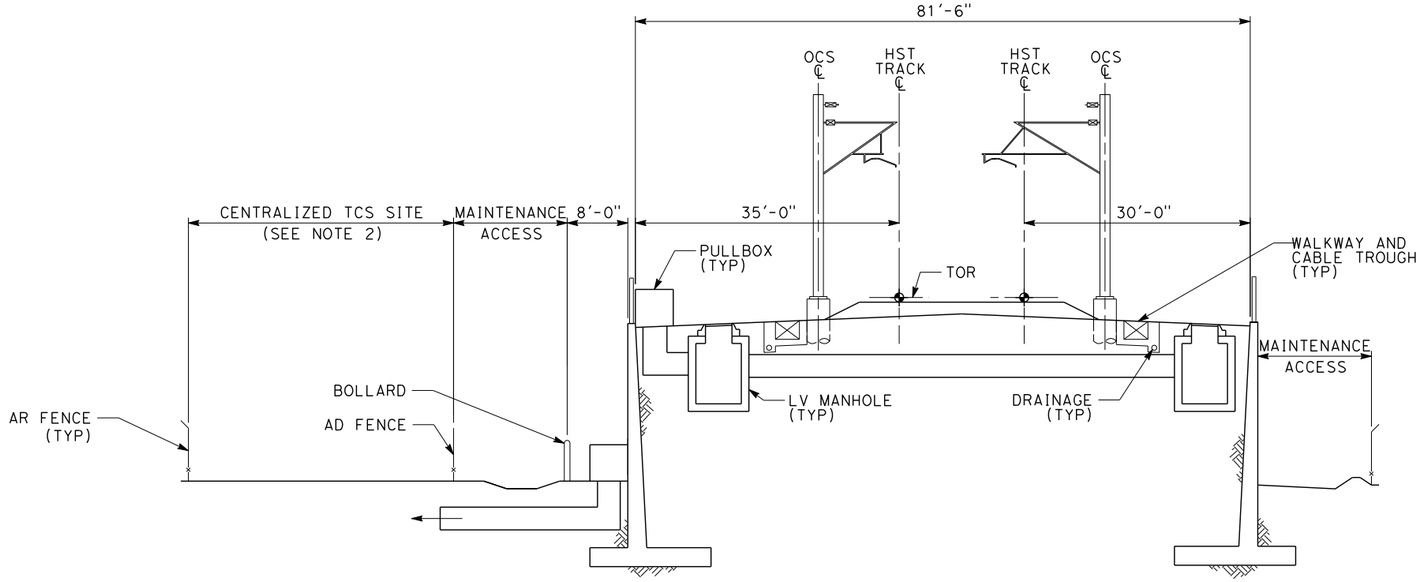

TYPICAL SECTION
CENTRALIZED TCS SITE ADJACENT TO HST TRACKWAY
RETAINING WALL

NOTES:

1. FOR RETAINED-FILLED TRACKWAYS, REINFORCED CONCRETE RETAINING WALLS SHALL BE USED AT SYSTEMS SITES.
2. TYPICAL CROSS SECTIONAL WIDTH SHOWN SHALL BE PROVIDED FOR MINIMUM LENGTH EQUAL TO THE LONGITUDINAL WIDTH OF THE CENTRALIZED TRAIN CONTROL SITE OR FOR THE LONGITUDINAL DISTANCE BETWEEN FURTHEST AUTOMATIC TRAIN CONTROL SITES AT AN INTERLOCKING.
3. FOR TRAIN CONTROL SYSTEM SITE REQUIREMENTS REFER TO TYPICAL TRAIN CONTROL SITES LAYOUT DIRECTIVE DRAWINGS.
4. A LOW VOLTAGE UNDERTRACK DUCTBANK WITH 2 LOW VOLTAGE MANHOLES PROVIDED AT EACH SYSTEMS SITE. REFER TO COMMUNICATIONS DESIGN CRITERIA MANUAL AND DIRECTIVE DRAWINGS FOR LOW VOLTAGE UNDERTRACK CONDUIT DUCTBANK AND MANHOLE REQUIREMENTS.
5. FOR ACCESS RESTRICTION FENCING AND BERM DETAILS, REFER TO CIVIL DIRECTIVE DRAWINGS.
6. TRACK SYSTEMS AND DRAINAGE ARE SCHEMATIC AND DO NOT REPRESENT DESIGN. FOR SITE DRAINAGE REQUIREMENTS REFER TO DRAINAGE DIRECTIVE DRAWINGS.
7. FOR ACCESS ROADS, ACCESS GATE AND ACCESS TO TRACKWAY REQUIREMENTS REFER TO SAFETY AND SECURITY DESIGN REQUIREMENTS FOR INFRASTRUCTURE ELEMENTS AND CIVIL DESIGN CRITERIA.

REV	DATE	BY	CHK	APP	DESCRIPTION

DESIGNED BY I. MUFTIC
DRAWN BY V. LAVERDE
CHECKED BY B. MCNALLY
IN CHARGE B. BANKS
DATE 8/29/2014

PARSONS BRINCKERHOFF

CALIFORNIA HIGH-SPEED RAIL AUTHORITY

CALIFORNIA HIGH-SPEED TRAIN PROJECT
TRAIN CONTROL SYSTEM DIRECTIVE

SYSTEMS SITE
TCS
RETAINED FILL

CONTRACT NO.
DRAWING NO. DD-TC-103
SCALE NO SCALE
SHEET NO.

RFP No. HSR 14-32 – INITIAL RELEASE - 05/27/2015

9/30/2014 12:17:10 PM CAHSRP.TBL CHSR_half_black.plt C:\Users\mincio\Desktop\New folder (3)\DD-TC-103.dgn Mincio

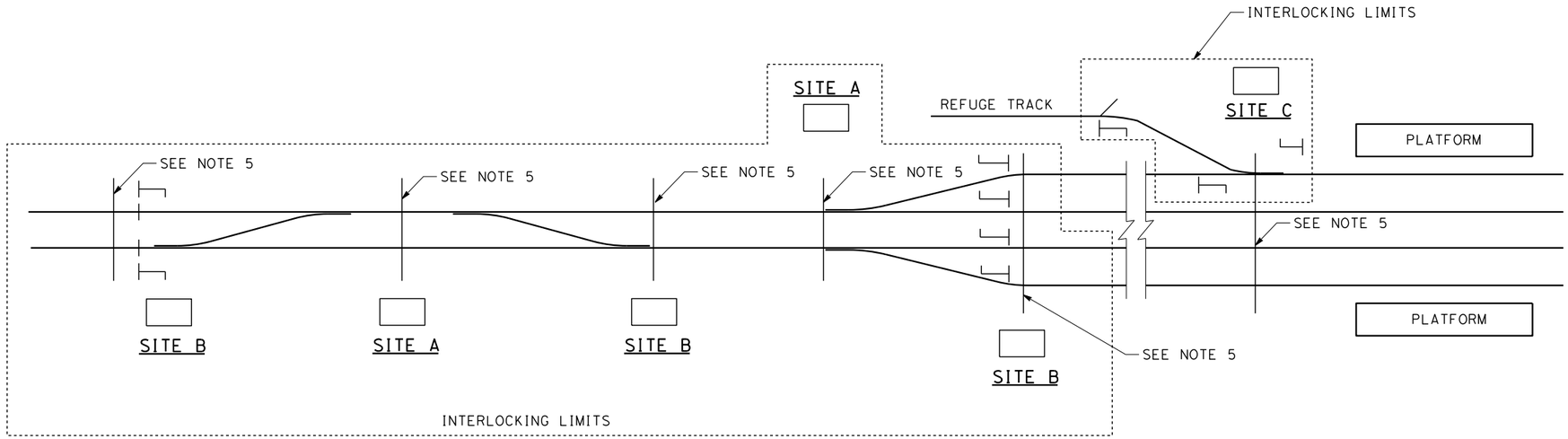

PLAN

NOTES:

1. SITES A AND B MAY BE LOCATED ON EITHER SIDE OF THE TRACK.
2. WHERE POSSIBLE, FOR SITES A AND B, ALTERNATIVES SHALL BE PROVIDED ON THE OPPOSITE SIDE OF THE TRACK.
3. SITE A WILL ACCOMMODATE TRAIN CONTROL SYSTEM EQUIPMENT, COMMUNICATIONS SYSTEM EQUIPMENT WITH THE RADIO TOWER, AND WAYSIDE POWER CONTROL (WPC) EQUIPMENT.
4. AN ACCESS ROAD AND AN ACCESS GATE SHALL BE PROVIDED FOR EACH SITE PER THE CIVIL DESIGN CRITERIA.
5. AN ASSEMBLY, CONSISTING OF A LOW VOLTAGE UNDERTRACK DUCTBANK WITH 2 LOW VOLTAGE MANHOLES, SHALL BE PROVIDED AT EACH TRAIN CONTROL SITE. REFER TO COMMUNICATIONS DRAWINGS FOR LOW VOLTAGE UNDERTRACK CONDUIT DUCTBANK AND MANHOLE DETAIL REQUIREMENTS.
6. FOR NUMBER OF CONDUITS REFER TO COMMUNICATIONS DESIGN CRITERIA AND DRAWING "TYPICAL CROSS SECTION SYSTEMS LOW-VOLTAGE CONDUIT DUCTBANK".
7. ACCESS ROADS AND ACCESS GATES ARE SHOWN FOR INFORMATION ONLY. REFER TO CIVIL DESIGN CRITERIA FOR ACCESS ROADS AND ACCESS GATES DETAIL REQUIREMENTS.

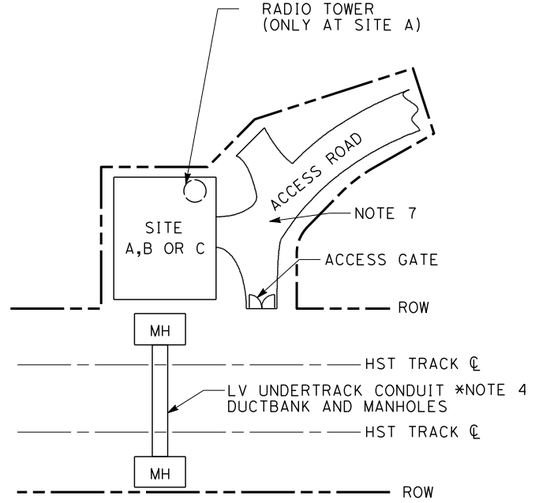

SITE A, B OR C

WITH LOW-VOLTAGE UNDERTRACK CONDUIT DUCTBANK, ACCESS ROADS AND GATES

RFP No. HSR 14-32 – INITIAL RELEASE - 05/27/2015

REV	DATE	BY	CHK	APP	DESCRIPTION

DESIGNED BY: I. MUFTIC
DRAWN BY: V. LAVERDE
CHECKED BY: B. MCNALLY
IN CHARGE: B. BANKS
DATE: 8/29/2014

PARSONS BRINCKERHOFF

CALIFORNIA HIGH-SPEED RAIL AUTHORITY

CALIFORNIA HIGH-SPEED TRAIN PROJECT
TRAIN CONTROL DIRECTIVE

TYPICAL TCS SITES
LAYOUT AT STATION AND INTERLOCKINGS

CONTRACT NO.
DRAWING NO. DD-TC-200
SCALE NO SCALE
SHEET NO.

Mincio 9/30/2014 12:17:12 PM CAHSRP.TBL CHSR_half_black.plt C:\Users\mincio\Desktop\New folder (3)\DD-TC-200.dgn

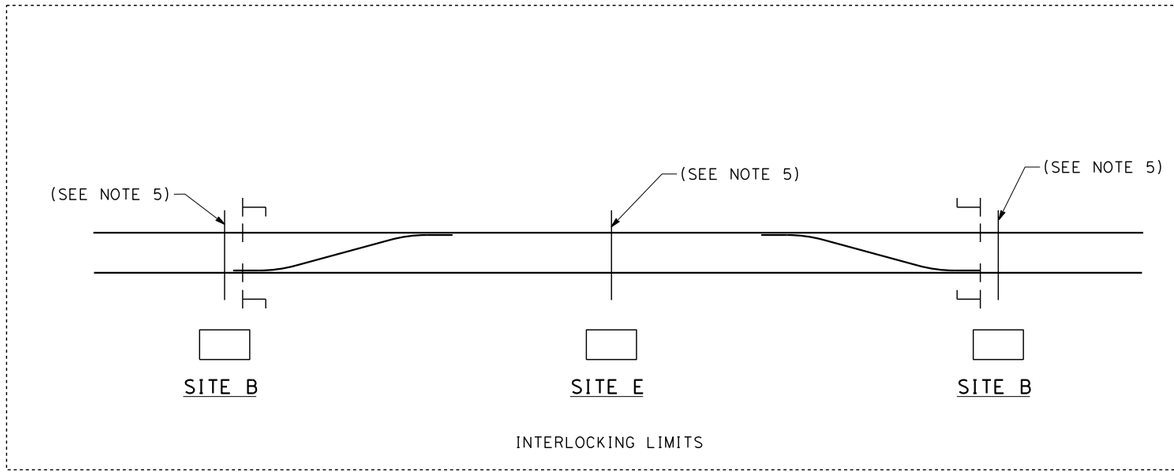

NOTES:

1. SITES B AND E MAY BE LOCATED ON EITHER SIDE OF THE TRACK.
2. WHERE POSSIBLE, FOR SITES B AND E, ALTERNATIVES SHALL BE PROVIDED ON THE OPPOSITE SIDE OF THE TRACK.
3. SITE E WILL ACCOMMODATE TRAIN CONTROL SYSTEM EQUIPMENT, COMMUNICATIONS SYSTEM EQUIPMENT WITH THE RADIO TOWER, AND WAYSIDE POWER CONTROL (WPC) EQUIPMENT.
4. AN ACCESS ROAD AND AN ACCESS GATE SHALL BE PROVIDED FOR EACH SITE PER THE CIVIL DESIGN CRITERIA.
5. AN ASSEMBLY, CONSISTING OF A LOW VOLTAGE UNDERTRACK DUCTBANK WITH 2 LOW VOLTAGE MANHOLES, SHALL BE PROVIDED AT EACH TRAIN CONTROL SITE. REFER TO COMMUNICATIONS DRAWINGS FOR LOW VOLTAGE UNDERTRACK CONDUIT DUCTBANK AND MANHOLE DETAIL REQUIREMENTS.
6. FOR NUMBER OF CONDUITS REFER TO COMMUNICATIONS DESIGN CRITERIA AND DRAWING "TYPICAL CROSS SECTION SYSTEMS LOW-VOLTAGE CONDUIT DUCTBANK".
7. ACCESS ROADS AND ACCESS GATES ARE SHOWN FOR INFORMATION ONLY. REFER TO CIVIL DESIGN CRITERIA FOR ACCESS ROADS AND ACCESS GATES DETAIL REQUIREMENTS.

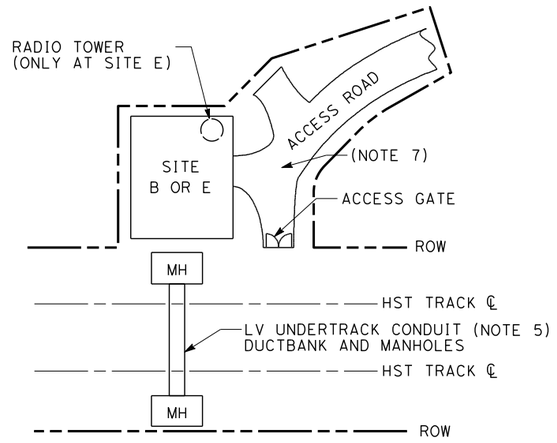

SITE B OR E

WITH LOW-VOLTAGE UNDERTRACK CONDUIT DUCTBANK, ACCESS ROADS AND GATES

RFP No. HSR 14-32 – INITIAL RELEASE - 05/27/2015

REV	DATE	BY	CHK	APP	DESCRIPTION

DESIGNED BY: I. MUFTIC
DRAWN BY: V. LAVERDE
CHECKED BY: B. MCNALLY
IN CHARGE: B. BANKS
DATE: 8/29/2014

PARSONS BRINCKERHOFF

CALIFORNIA HIGH-SPEED RAIL AUTHORITY

CALIFORNIA HIGH-SPEED TRAIN PROJECT
TRAIN CONTROL DIRECTIVE

TYPICAL TCS SITES AND INTERLOCKINGS LAYOUT AT UNIVERSAL CROSSOVERS

CONTRACT NO.
DRAWING NO. DD-TC-201
SCALE NO SCALE
SHEET NO.

Mincio 9/30/2014 12:17:13 PM CAHSRP.TBL CHSR_half_black.plt C:\Users\mincio\Desktop\New folder (3)\DD-TC-201.dgn

D = 7.5 MILES NOMINAL; 5.8 MILES < D < 8.7 MILES

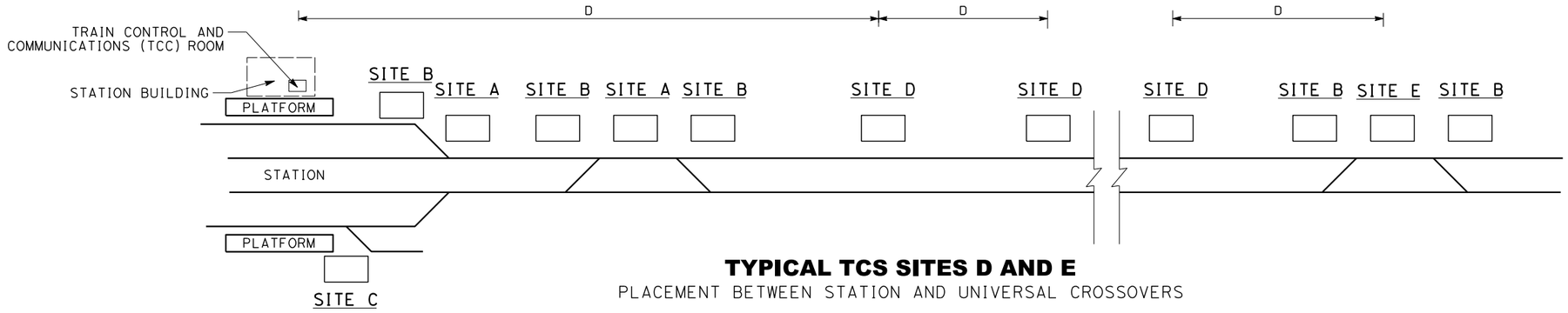

TYPICAL TCS SITES D AND E

PLACEMENT BETWEEN STATION AND UNIVERSAL CROSSOVERS

D = 7.5 MILES NOMINAL; 5.8 MILES < D < 8.7 MILES

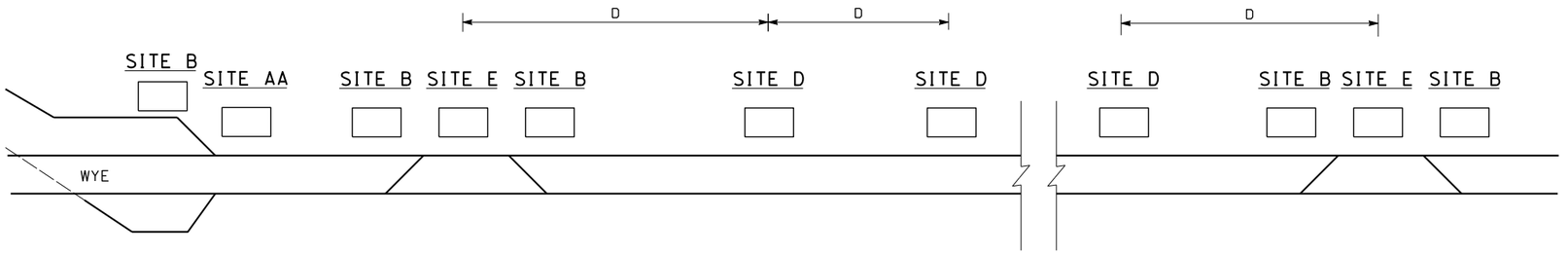

TYPICAL TCS SITES D AND E

PLACEMENT BETWEEN WYE AND UNIVERSAL CROSSOVERS

D = 7.5 MILES NOMINAL; 5.8 MILES < D < 8.7 MILES

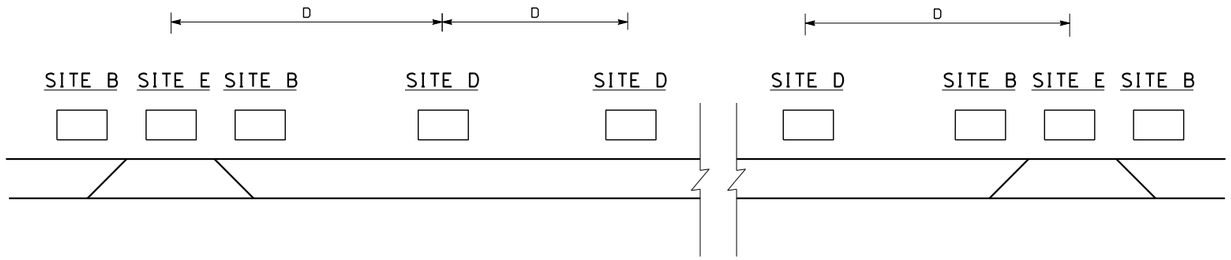

TYPICAL TCS SITES D AND E

PLACEMENT BETWEEN TWO ADJACENT UNIVERSAL CROSSOVERS

NOTES:

1. THIS DRAWING SHOWS A TYPICAL SPACING BETWEEN STATION TRAIN CONTROL AND COMMUNICATIONS (TCC) ROOM, D SITES, AND E SITES AT UNIVERSAL CROSSOVERS.
2. IF THE STATION DESIGN IS NOT AVAILABLE, THE CENTER LINE OF PLATFORM SHALL BE USED AS A REFERENCE POINT INSTEAD OF THE EXACT LOCATION OF THE TCC ROOM.
3. D SITES SHALL BE PROVIDED AT THE NOMINAL DISTANCE OF 7.5 MILES BETWEEN STATION TCC ROOM AND ADJACENT SITE D, BETWEEN 2 ADJACENT D SITES, AND BETWEEN ADJACENT D SITE AND E SITE AT UNIVERSAL CROSSOVERS.
4. MINIMUM SPACING BETWEEN STATION TCC ROOM AND ADJACENT SITE D, BETWEEN 2 ADJACENT D SITES, AND BETWEEN ADJACENT D SITE AND E SITE AT UNIVERSAL CROSSOVERS IS 5.8 MILES.
5. MAXIMUM SPACING BETWEEN STATION TCC ROOM AND ADJACENT SITE D, BETWEEN 2 ADJACENT D SITES, AND BETWEEN ADJACENT D SITE AND E SITE AT UNIVERSAL CROSSOVERS IS 8.7 MILES.
6. D SITES MAY BE LOCATED ON EITHER SIDE OF TRACK.
7. FOR EACH D SITE, AN ALTERNATIVE SHALL BE PROVIDED.
8. IF THERE IS AN EXISTING STAND ALONE RADIO SITE (SRS) WITHIN THE SPACING LIMITS FOR A D SITE, THE SRS CAN BE REPLACED WITH A NEW D SITE.
9. IF THERE IS A TRACTION POWER FACILITY (TPF) WITHIN THE SPACING LIMITS FOR AN ATC D SITE, THE ATC D SITE CAN BE PLACED CLOSE TO THE TPF SITE TO UTILIZE THE SAME ACCESS ROAD.
10. THIS CRITERIA IS NOT APPLICABLE FOR TUNNELS LONGER THAN 6 MILES AND THOSE WILL BE CONSIDERED AS A SPECIAL CASE.
11. AN ASSEMBLY, CONSISTING OF A LOW VOLTAGE UNDERTRACK DUCTBANK WITH 2 LOW VOLTAGE MANHOLES, SHALL BE PROVIDED AT EACH TRAIN CONTROL SITE. REFER TO COMMUNICATIONS DRAWINGS FOR LOW VOLTAGE UNDERTRACK CONDUIT DUCTBANK AND MANHOLE DETAIL REQUIREMENTS.
12. ACCESS ROADS AND ACCESS GATES ARE SHOWN FOR INFORMATION ONLY. REFER TO CIVIL DESIGN CRITERIA FOR ACCESS ROADS AND ACCESS GATES DETAIL REQUIREMENTS.

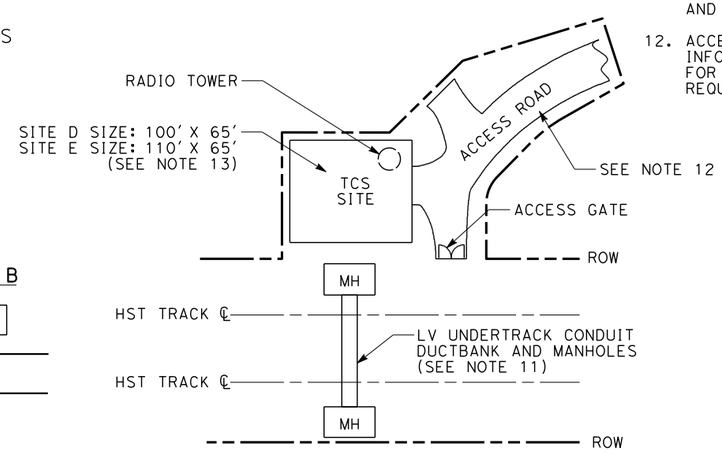

TYPICAL SITES D & E CONFIGURATION

WITH LOW-VOLTAGE UNDERTRACK CONDUIT DUCTBANK, ACCESS ROADS AND GATES

RFP No. HSR 14-32 – INITIAL RELEASE - 05/27/2015

REV	DATE	BY	CHK	APP	DESCRIPTION

DESIGNED BY: I. MUFTIC
DRAWN BY: V. LAVERDE
CHECKED BY: B. MCNALLY
IN CHARGE: B. BANKS
DATE: 8/29/2014

PARSONS BRINCKERHOFF

CALIFORNIA HIGH-SPEED RAIL AUTHORITY

CALIFORNIA HIGH-SPEED TRAIN PROJECT
TRAIN CONTROL DIRECTIVE

TYPICAL TCS
SITES D AND E CONFIGURATION

CONTRACT NO.:
DRAWING NO.: DD-TC-202
SCALE: NO SCALE
SHEET NO.:

9/30/2014 12:17:14 PM CAHSRP.TBL CHSR_half_black.plt C:\Users\mincio\Desktop\New folder (3)\DD-TC-202.dgn Mincio

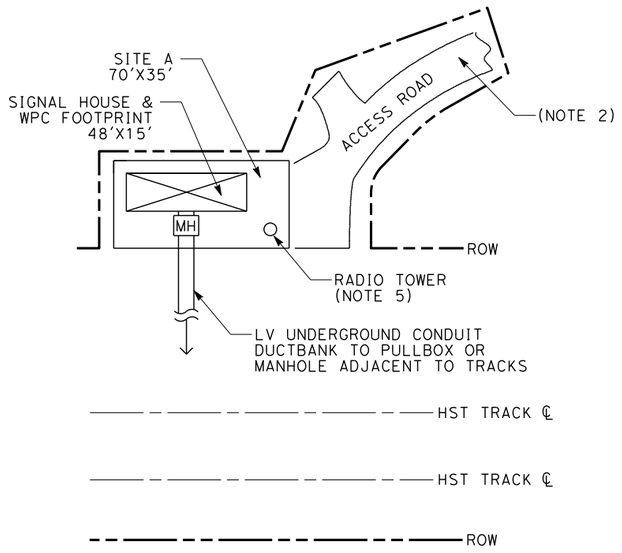

SITE A TYPICAL CONFIGURATION

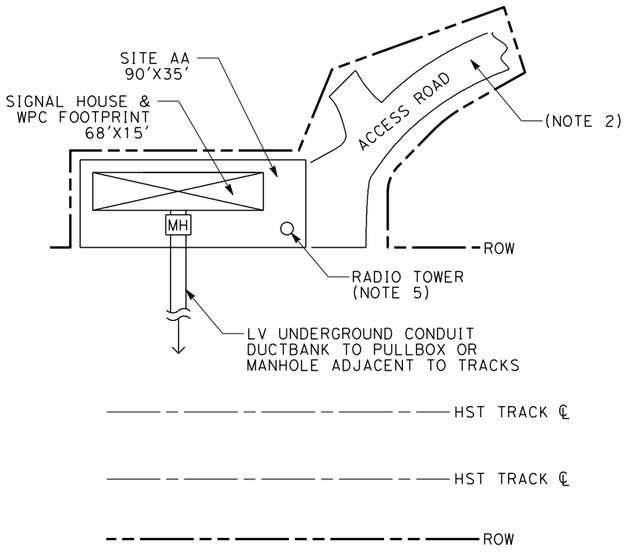

SITE AA TYPICAL CONFIGURATION

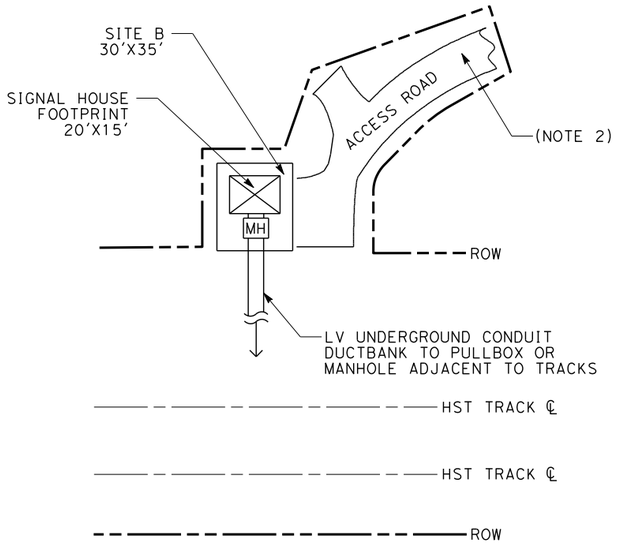

SITE B TYPICAL CONFIGURATION

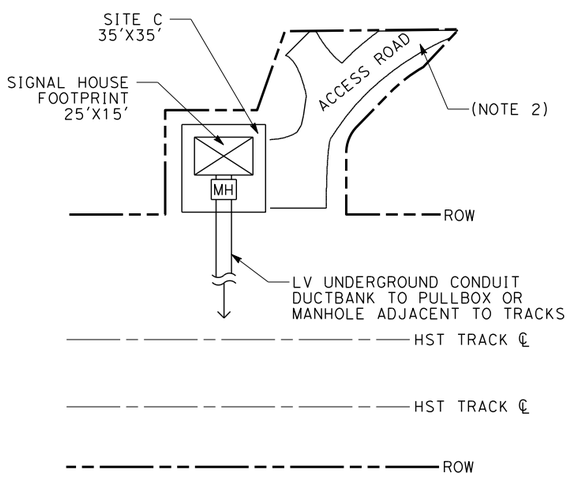

SITE C TYPICAL CONFIGURATION

NOTES:

1. SITES A AND AA WILL ACCOMMODATE TRAIN CONTROL, COMMUNICATIONS SYSTEM (WITH RADIO TOWER), AND WAYSIDE POWER CONTROL (WPC) EQUIPMENT. A SEPARATE ROOM OF 25 SQUARE FEET SHALL BE RESERVED FOR WPC WITHIN THE SIGNAL HOUSE.
2. REFER TO COMMUNICATIONS DRAWINGS FOR DUCTBANK, MANHOLE CROSS SECTIONS, DETAILS AND ELEVATIONS.
3. FOR NUMBERS OF CONDUITS REFER TO COMMUNICATION DESIGN CRITERIA AND DRAWING "TYPICAL CROSS SECTION SYSTEMS LOW-VOLTAGE CONDUIT DUCTBANK".
4. FOR RADIO TOWER REQUIREMENTS AND CLEARANCES REFER TO COMMUNICATIONS DESIGN CRITERIA AND DRAWINGS.

RFP No. HSR 14-32 – INITIAL RELEASE - 05/27/2015

9/30/2014 12:17:16 PM CAHSRP.TBL CHSR_half_black.plt C:\Users\mincio\Desktop\New folder (3)\DD-TC-203.dgn Mincio

REV	DATE	BY	CHK	APP	DESCRIPTION

DESIGNED BY: I. MUFTIC
DRAWN BY: V. LAVERDE
CHECKED BY: B. MCNALLY
IN CHARGE: B. BANKS
DATE: 8/29/2014

PARSONS BRINCKERHOFF

CALIFORNIA HIGH-SPEED RAIL AUTHORITY

CALIFORNIA HIGH-SPEED TRAIN PROJECT
TRAIN CONTROL DIRECTIVE

TYPICAL TCS SITES
A, AA, B, & C LAYOUT

CONTRACT NO.:
DRAWING NO.: DD-TC-203
SCALE: NO SCALE
SHEET NO.:

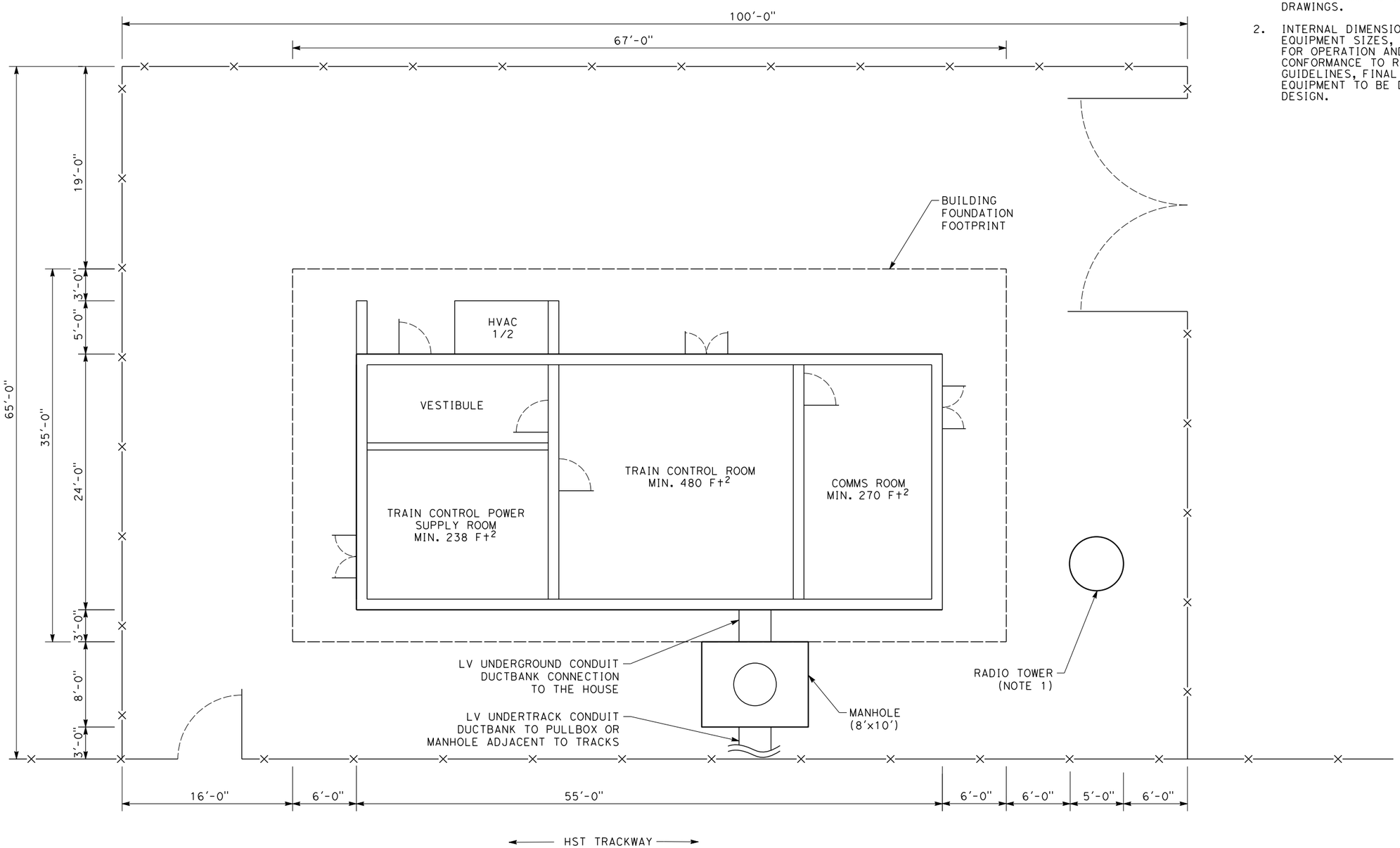

NOTES:

1. FOR RADIO TOWER REQUIREMENTS AND CLEARANCES REFER TO COMMUNICATIONS DESIGN CRITERIA AND DRAWINGS.
2. INTERNAL DIMENSIONS ARE SHOWN FOR TYPICAL EQUIPMENT SIZES, CLEARANCES AND ACCESSIBILITY FOR OPERATION AND MAINTENANCE OF EQUIPMENT CONFORMANCE TO RELEVANT CODES, STANDARDS, AND GUIDELINES, FINAL DIMENSIONS AND CONFIGURATION OF EQUIPMENT TO BE DETERMINED DURING FINAL SYSTEMS DESIGN.

RFP No. HSR 14-32 – INITIAL RELEASE - 05/27/2015

REV	DATE	BY	CHK	APP	DESCRIPTION

DESIGNED BY: I. MUFTIC
DRAWN BY: V. LAVERDE
CHECKED BY: B. MCNALLY
IN CHARGE: B. BANKS
DATE: 8/29/2014

PARSONS BRINCKERHOFF

CALIFORNIA HIGH-SPEED RAIL AUTHORITY

CALIFORNIA HIGH-SPEED TRAIN PROJECT
TRAIN CONTROL DIRECTIVE

TYPICAL TCS SITE D LAYOUT

CONTRACT NO.
DRAWING NO. DD-TC-204
SCALE NO SCALE
SHEET NO.

9/30/2014 12:17:54 PM CAHSRP.TBL CHSR_half_black.plt C:\Users\mincio\Desktop\New folder (3)\DD-TC-204.dgn Mincio

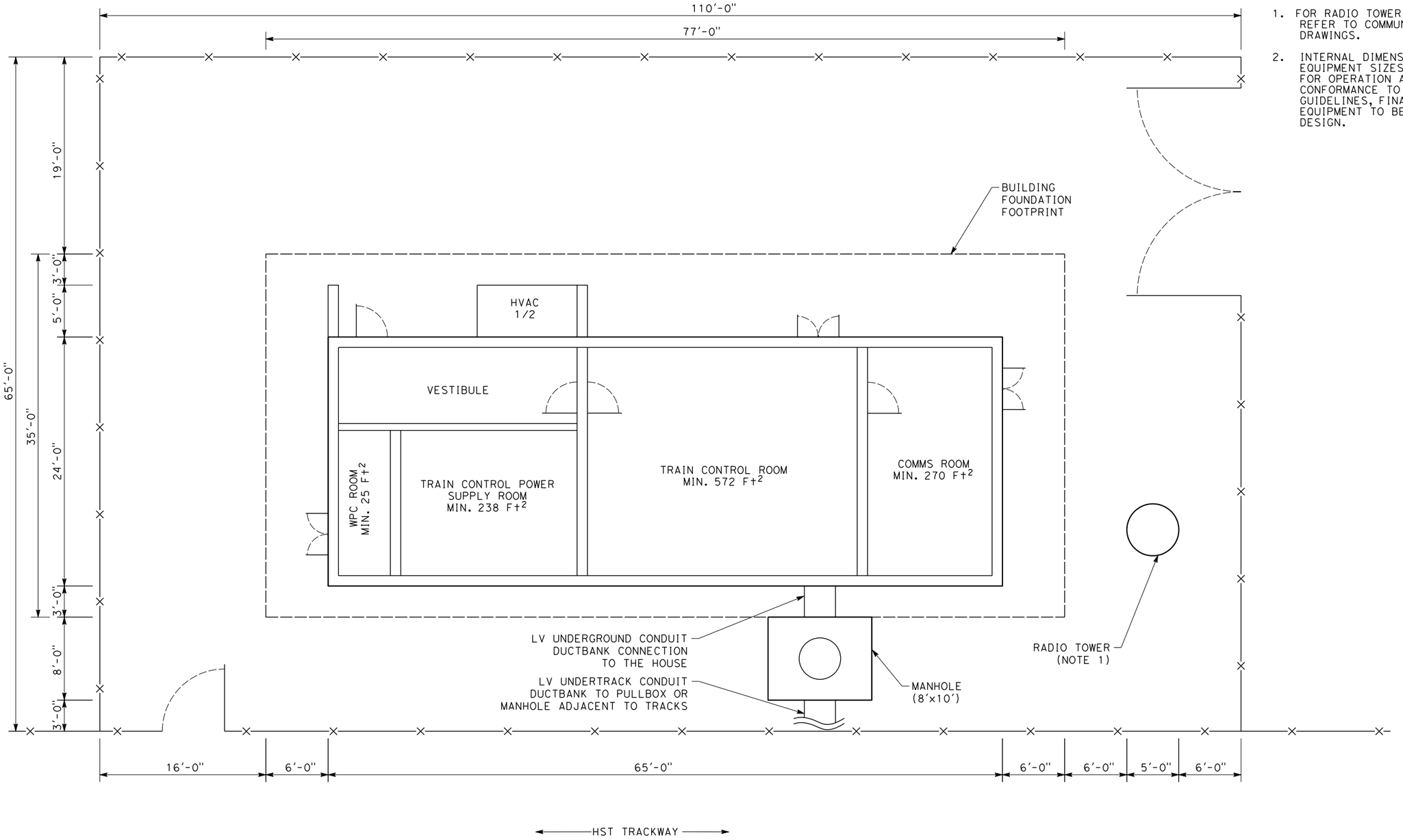

NOTES:

1. FOR RADIO TOWER REQUIREMENTS AND CLEARANCES REFER TO COMMUNICATIONS DESIGN CRITERIA AND DRAWINGS.
2. INTERNAL DIMENSIONS ARE SHOWN FOR TYPICAL EQUIPMENT SIZES, CLEARANCES AND ACCESSIBILITY FOR OPERATION AND MAINTENANCE OF EQUIPMENT CONFORMANCE TO RELEVANT CODES, STANDARDS, AND GUIDELINES, FINAL DIMENSIONS AND CONFIGURATION OF EQUIPMENT TO BE DETERMINED DURING FINAL SYSTEMS DESIGN.

RFP No. HSR 14-32 – INITIAL RELEASE - 05/27/2015

REV	DATE	BY	CHK	APP	DESCRIPTION

DESIGNED BY: I. MUFTIC
DRAWN BY: V. LAVERDE
CHECKED BY: B. MCNALLY
IN CHARGE: B. BANKS
DATE: 8/29/2014

PARSONS BRINCKERHOFF

CALIFORNIA HIGH-SPEED RAIL AUTHORITY

CALIFORNIA HIGH-SPEED TRAIN PROJECT
TRAIN CONTROL DIRECTIVE

TYPICAL TCS SITE E LAYOUT

CONTRACT NO.
DRAWING NO. DD-TC-205
SCALE NO SCALE
SHEET NO.

Mincio 9/30/2014 12:17:56 PM CAHSRP.tbl CHSR_half_black.plt C:\Users\mincio\Desktop\New folder (3)\DD-TC-205.dgn

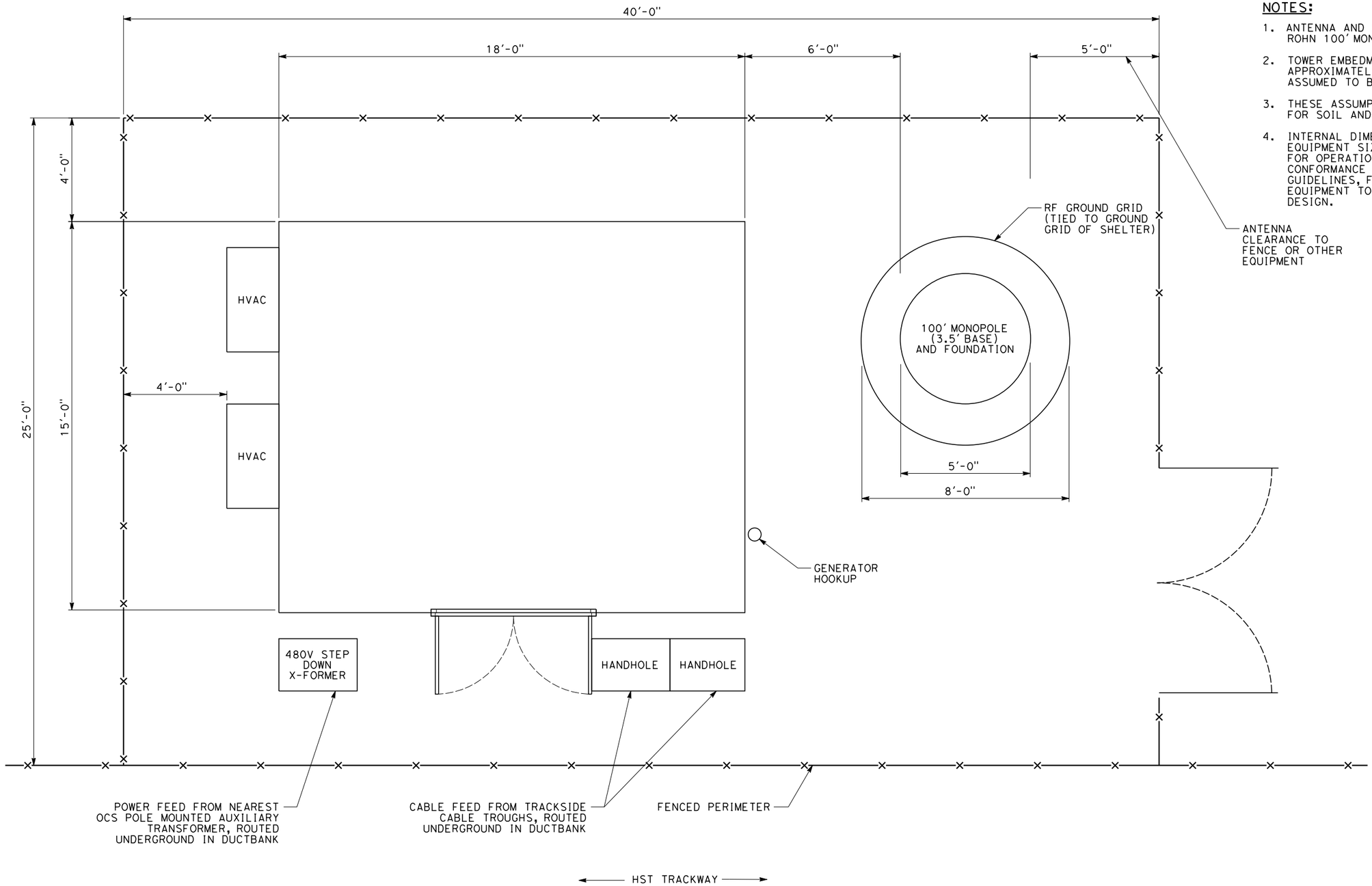

NOTES:

1. ANTENNA AND SUPPORT DIMENSIONS ARE BASED ON ROHN 100' MONOPOLE T100HA.
2. TOWER EMBEDMENT DEPTH ASSUMED TO BE APPROXIMATELY 25 FEET TOWER BASE AND FOUNDATION ASSUMED TO BE 5 FOOT DIAMETER.
3. THESE ASSUMPTIONS SHALL BE VALIDATED BY DESIGN FOR SOIL AND ENVIRONMENTAL CONDITIONS.
4. INTERNAL DIMENSIONS ARE SHOWN FOR TYPICAL EQUIPMENT SIZES. CLEARANCES AND ACCESSIBILITY FOR OPERATION AND MAINTENANCE OF EQUIPMENT AND CONFORMANCE TO RELEVANT CODES, STANDARDS, AND GUIDELINES, FINAL DIMENSIONS AND CONFIGURATION OF EQUIPMENT TO BE DETERMINED DURING FINAL SYSTEMS DESIGN.

RFP No. HSR 14-32 – INITIAL RELEASE - 05/27/2015

REV	DATE	BY	CHK	APP	DESCRIPTION

DESIGNED BY: C. DALOIA
DRAWN BY: V. LAVERDE
CHECKED BY: B. MCNALLY
IN CHARGE: B. BANKS
DATE: 8/29/2014

PARSONS BRINCKERHOFF

CALIFORNIA HIGH-SPEED RAIL AUTHORITY

CALIFORNIA HIGH-SPEED TRAIN PROJECT
COMMUNICATIONS DIRECTIVE

CONCEPTUAL LAYOUT
COMMUNICATIONS SPACES
PHYSICAL SITE LAYOUT

CONTRACT NO.
DRAWING NO. DD-CO-F080
SCALE NO SCALE
SHEET NO.

LaverdeV 9/30/2014 1:19:13 PM CAHSRP.tbl CHSR_PDF_half_black.plt c:\projectwise\pb\projectwiseint\laverdev\dms17832\DD-CO-F080.dgn

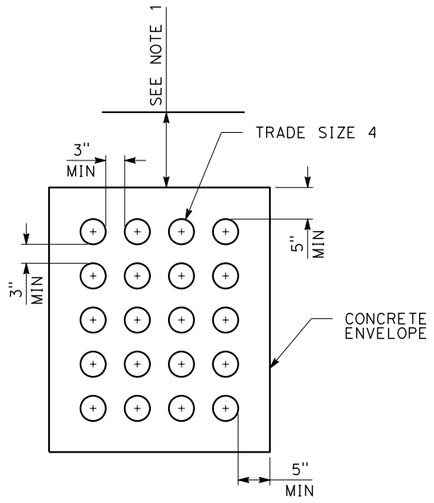

20 CONDUIT CONCRETE ENCASED DUCT BANK

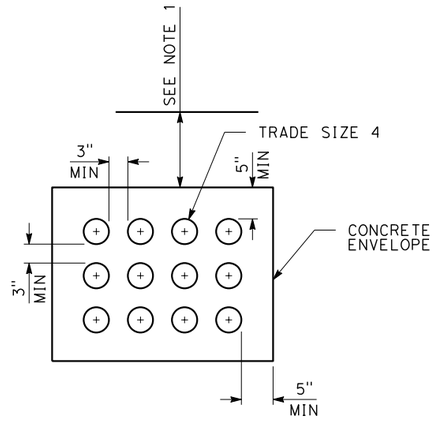

12 CONDUIT CONCRETE ENCASED DUCT BANK

NOTES:

1. CONCRETE ENCASED DUCT BANK TO BE PLACED A MINIMUM 6' BELOW TOP OF RAIL AND MINIMUM 3' BELOW GRADE WHEN NO RAIL IS PRESENT.
2. LOW VOLTAGE DUCT BANK TO BE LOCATED PER THE CRITERIA LISTED IN THE COMMUNICATIONS DESIGN CRITERIA CHAPTER.

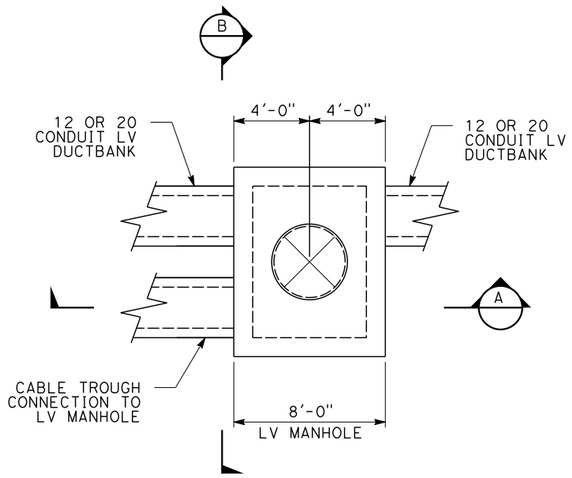

PLAN

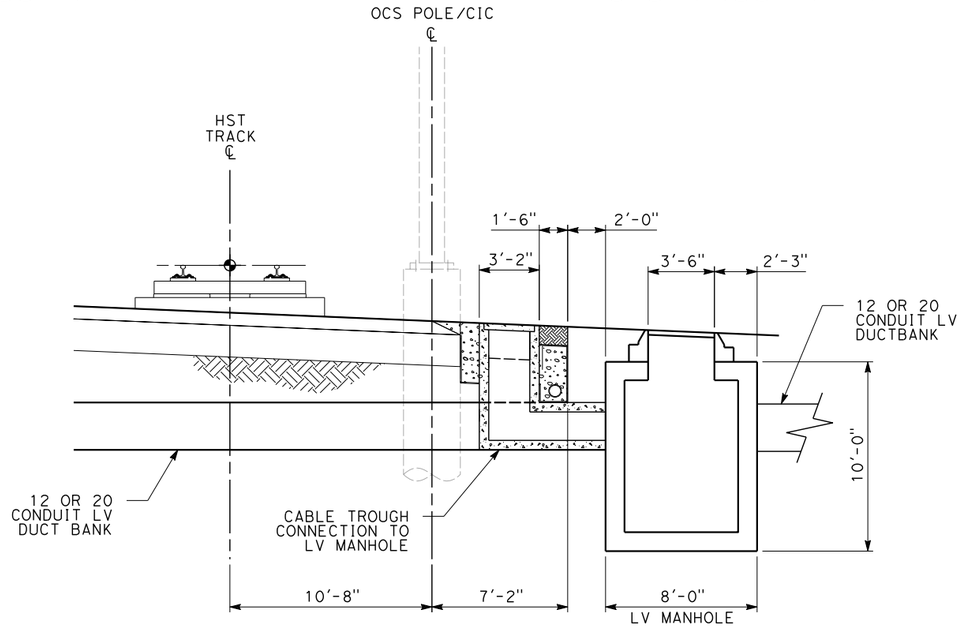

SECTION A

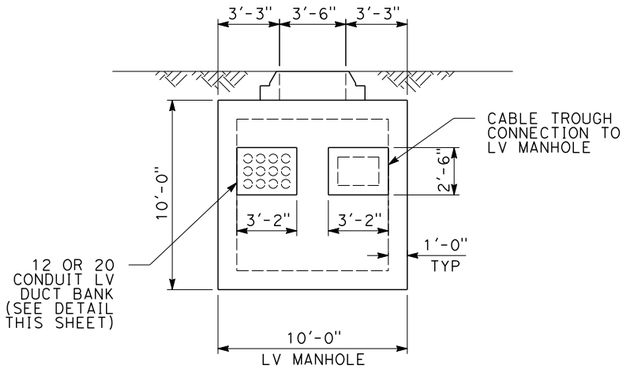

SECTION B

RFP No. HSR 14-32 – INITIAL RELEASE - 05/27/2015

REV	DATE	BY	CHK	APP	DESCRIPTION

DESIGNED BY C. DALOIA
DRAWN BY V. LAVERDE
CHECKED BY B. MCNALLY
IN CHARGE B. BANKS
DATE 8/29/2014

PARSONS BRINCKERHOFF

CALIFORNIA HIGH-SPEED RAIL AUTHORITY

CALIFORNIA HIGH-SPEED TRAIN PROJECT
COMMUNICATIONS DIRECTIVE

TYPICAL CROSS SECTION
LOW VOLTAGE MANHOLE / CABLE TROUGH / DUCTBANK DETAILS

CONTRACT NO.
DRAWING NO. DD-CO-G023
SCALE NO SCALE
SHEET NO.

Mincio 9/30/2014 12:47:57 PM CAHSRP.TBL CHSR_half_black.plt C:\Users\mincio\Desktop\New folder (3)\DD-CO-G023.dgn

NOTES:

1. TRACK, SYSTEMS AND DRAINAGE ARE SCHEMATIC AND DO NOT REPRESENT DESIGN.
2. MANHOLE SHALL NOT BE ALIGNED WITH OCS FOUNDATION OR FENCE FOOTING.

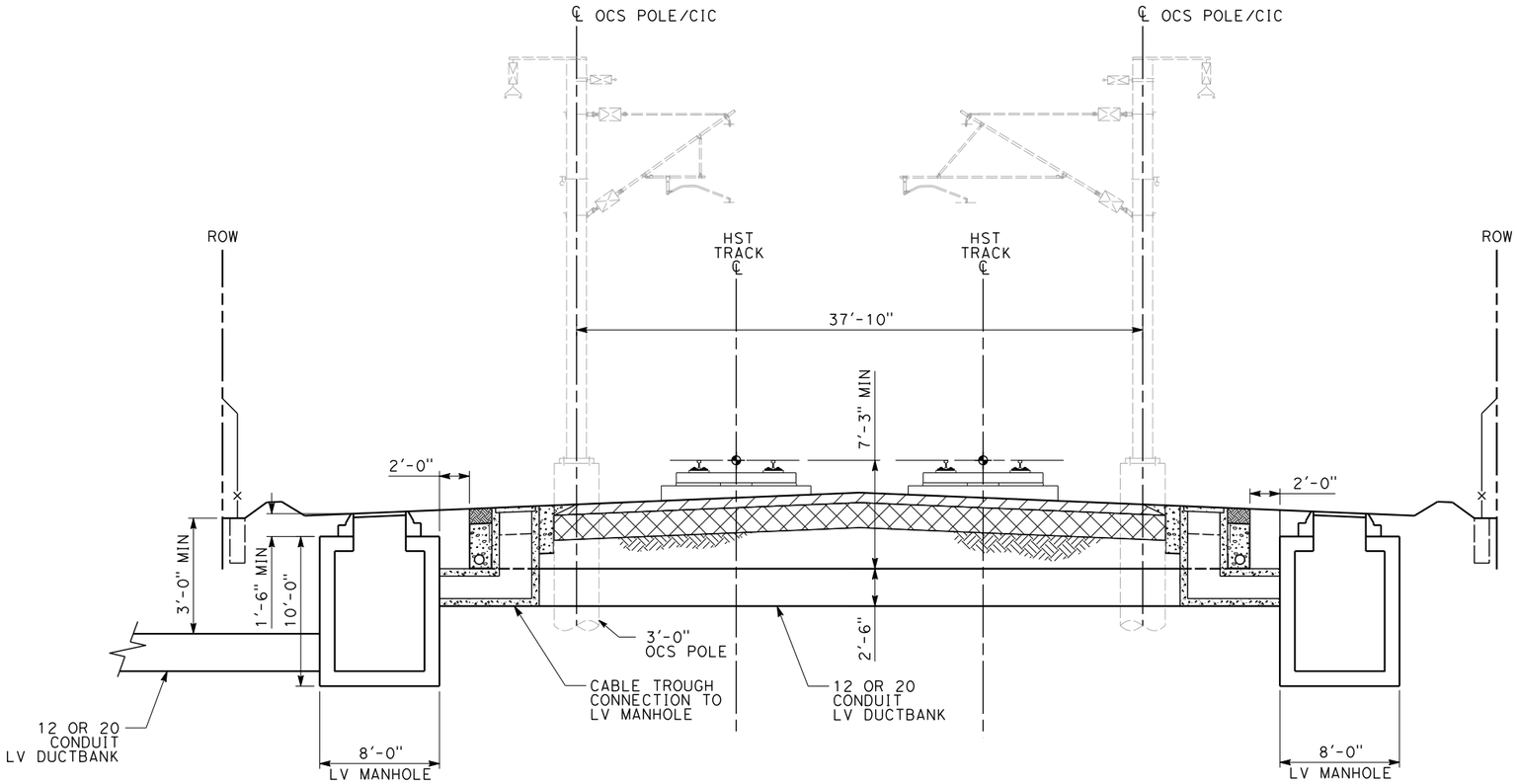

RFP No. HSR 14-32 – INITIAL RELEASE - 05/27/2015

REV	DATE	BY	CHK	APP	DESCRIPTION

DESIGNED BY B. BANKS
DRAWN BY V. HUANTE
CHECKED BY C. DALOIA
IN CHARGE R. SCHMEDES
DATE

PARSONS BRINCKERHOFF

CALIFORNIA HIGH-SPEED RAIL AUTHORITY

CALIFORNIA HIGH-SPEED TRAIN PROJECT
COMMUNICATIONS DIRECTIVE
TYPICAL CROSS SECTION
SYSTEMS LOW-VOLTAGE
UNDERTRACK CONDUIT DUCT BANK
AT-GRADE

CONTRACT NO.
DRAWING NO. DD-CO-G040
SCALE NO SCALE
SHEET NO.

mincio 3/30/2014 12:14:16 PM CAHSRP.tbl CHSR_half_black.plt c:\projectwise\pb\projectwiseint\mincio\dms17832\DD-CO-G040.dgn

NOTES:

1. TRACK, SYSTEMS AND DRAINAGE ARE SCHEMATIC AND DO NOT REPRESENT DESIGN.

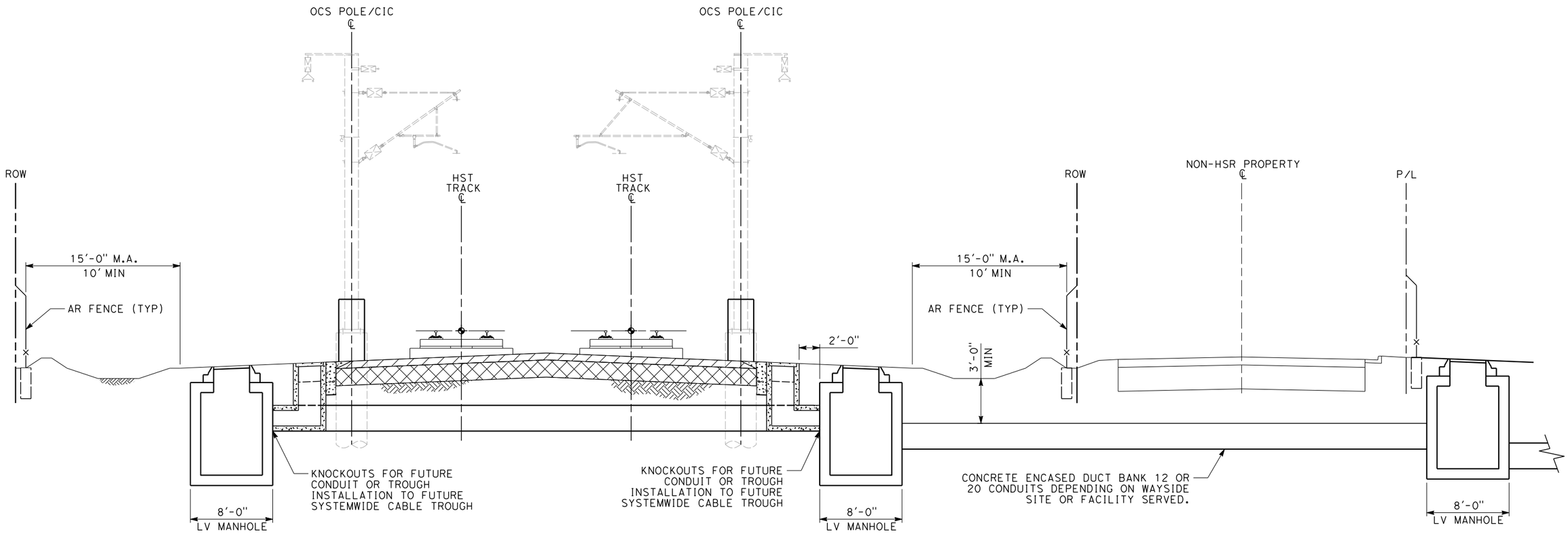

RFP No. HSR 14-32 – INITIAL RELEASE - 05/27/2015

REV	DATE	BY	CHK	APP	DESCRIPTION

DESIGNED BY: B. BANKS
DRAWN BY: V. HUANTE
CHECKED BY: C. DALOIA
IN CHARGE: R. SCHMEDES
DATE: 01/24/2014

PARSONS BRINCKERHOFF

CALIFORNIA HIGH-SPEED RAIL AUTHORITY

CALIFORNIA HIGH-SPEED TRAIN PROJECT
COMMUNICATIONS DIRECTIVE

TYPICAL CROSS SECTION
SYSTEMS LOW-VOLTAGE
UNDER TRACK/UNDERGROUND CONDUIT DUCT BANK
AT-GRADE

CONTRACT NO.
DRAWING NO. DD-CO-G041
SCALE NO SCALE
SHEET NO.

minicio 3/30/2014 12:16:20 PM CAHSRP.tbl CHSR_half_black.plt c:\projectwise\pb\projectwiseint\minicio\dms17832\DD-CO-G041.dgn

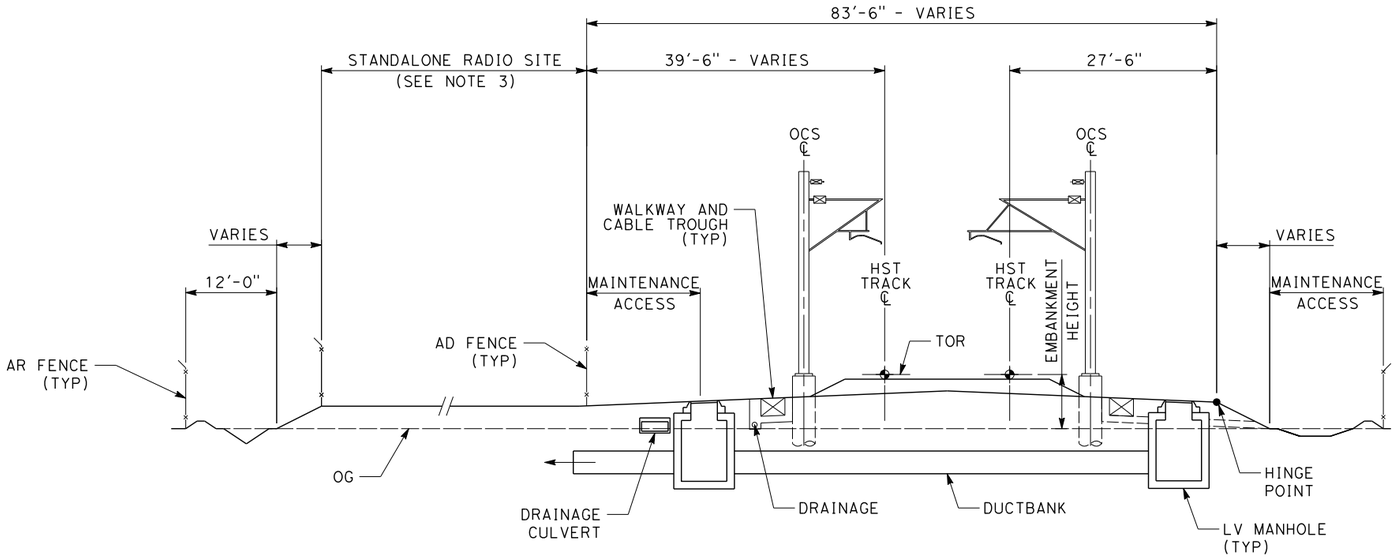

TYPICAL SECTION

STANDALONE RADIO SITE ADJACENT TO AT-GRADE HST TRACKWAY
WITH EMBANKMENT HEIGHT (TOR-OG) ≤ 10 FEET

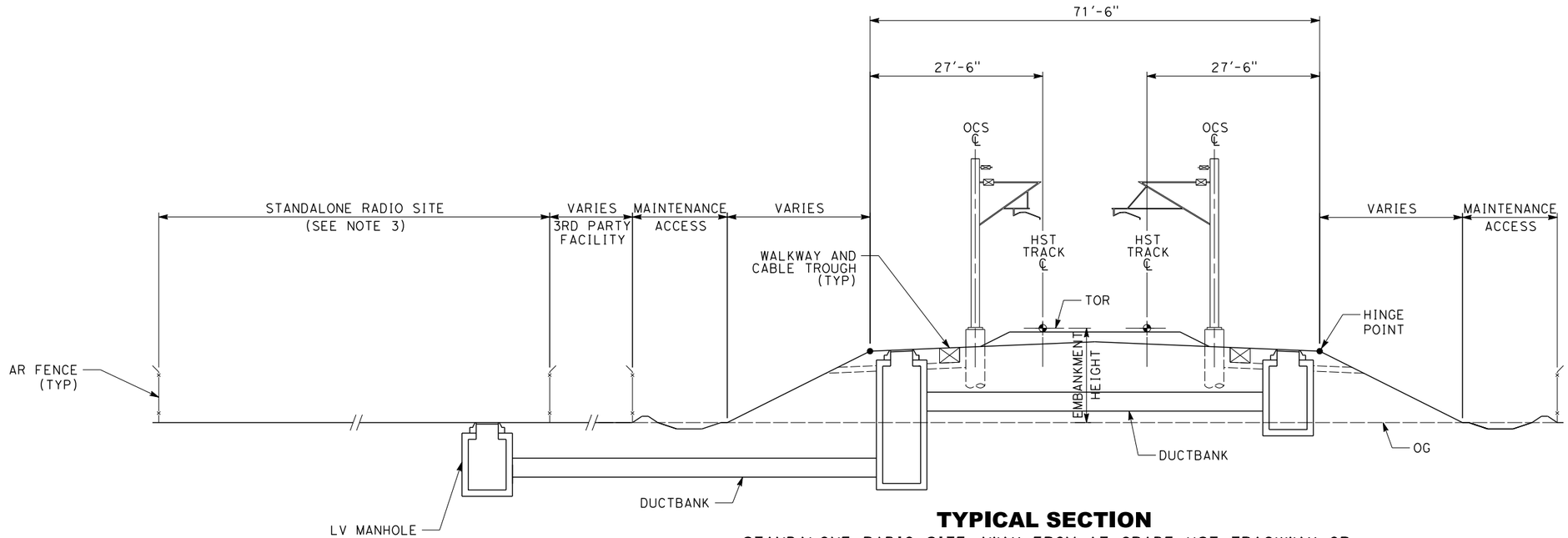

TYPICAL SECTION

STANDALONE RADIO SITE AWAY FROM AT-GRADE HST TRACKWAY OR
EMBANKMENT HEIGHT (TOR-OG) >10 FEET

NOTES:

1. TYPICAL CROSS-SECTIONAL WIDTH SHOWN SHALL BE PROVIDED FOR A MINIMUM LENGTH EQUAL TO THE LONGITUDINAL DIMENSION OF THE SYSTEMS SITE.
2. FOR ACCESS RESTRICTION FENCING AND BERM DETAILS, REFER TO CIVIL DIRECTIVE DRAWINGS.
3. TRACK SYSTEMS AND DRAINAGE ARE SCHEMATIC AND DO NOT REPRESENT DESIGN. FOR SITE DRAINAGE REQUIREMENTS REFER TO DRAINAGE DIRECTIVE DRAWINGS.
4. FOR ACCESS ROADS, ACCESS GATE AND ACCESS TO TRACKWAY REQUIREMENTS REFER TO SAFETY AND SECURITY DESIGN REQUIREMENTS FOR INFRASTRUCTURE ELEMENTS AND CIVIL DESIGN CRITERIA.
5. FOR STANDALONE RADIO SITE REQUIREMENTS REFER TO COMMUNICATIONS SYSTEMS SITE REQUIREMENTS.
6. A LOW VOLTAGE UNDERTRACK DUCTBANK WITH 2 LOW VOLTAGE MANHOLES TO BE PROVIDED AT SYSTEMS SITE. REFER TO COMMUNICATIONS DESIGN CRITERIA MANUAL AND DIRECTIVE DRAWINGS FOR LOW VOLTAGE UNDERTRACK CONDUIT DUCTBANK AND MANHOLE REQUIREMENTS.
7. SYSTEM SITES AWAY FROM TRACKWAY, SEPARATED BY A THIRD-PARTY RIGHT-OF-WAY ARE UNDESIRED. AWAY CROSS-SECTION IS ONLY APPLICABLE IF ADJACENT SOLUTION IS DEMONSTRATED TO VIOLATE SITE SPACING REQUIREMENTS OR OTHER CRITICAL CRITERIA.
8. LOW VOLTAGE UNDERGROUND DUCTBANK AND MANHOLE TO BE PROVIDED UNDERNEATH 3RD PARTY RIGHT-OF-WAY TO CONNECT TO LOW VOLTAGE UNDERTRACK MANHOLES AND DUCTBANK.

RFP No. HSR 14-32 – INITIAL RELEASE - 05/27/2015

REV	DATE	BY	CHK	APP	DESCRIPTION

DESIGNED BY C. DALOIA
DRAWN BY V. LAVERDE
CHECKED BY B. MCNALLY
IN CHARGE B. BANKS
DATE 8/29/2014

PARSONS BRINCKERHOFF

CALIFORNIA HIGH-SPEED RAIL AUTHORITY

CALIFORNIA HIGH-SPEED TRAIN PROJECT
COMMUNICATIONS DIRECTIVE

SYSTEMS SITE
STANDALONE RADIO SITE
AT-GRADE

CONTRACT NO.
DRAWING NO. DD-CO-G050
SCALE NO SCALE
SHEET NO.

9/30/2014 12:47:59 PM CAHSRP.TBL CHSR_half_black.plt C:\Users\mincio\Desktop\New folder (3)\DD-CO-G050.dgn Mincio

NOTES:

1. SYSTEM SITES AT AERIAL TRACKWAY ARE UNDESIRED. THESE CROSS-SECTIONS ARE ONLY APPLICABLE IF AT-GRADE SOLUTION IS DEMONSTRATED TO VIOLATE SITE SPACING REQUIREMENTS OR OTHER CRITICAL CRITERIA.
2. TYPICAL CROSS-SECTIONAL WIDTH SHOWN SHALL BE PROVIDED FOR A MINIMUM LENGTH EQUAL TO THE LONGITUDINAL DIMENSION OF THE SYSTEMS SITE.
3. FOR STANDALONE RADIO SITE REQUIREMENTS REFER TO COMMUNICATIONS SYSTEMS SITE REQUIREMENTS.
4. FOR ACCESS RESTRICTION FENCING AND BERM DETAILS, REFER TO CIVIL DIRECTIVE DRAWINGS.
5. TRACK SYSTEMS AND DRAINAGE ARE SCHEMATIC AND DO NOT REPRESENT DESIGN. FOR SITE DRAINAGE REQUIREMENTS REFER TO DRAINAGE DIRECTIVE DRAWINGS.
6. FOR ACCESS ROADS, ACCESS GATE AND ACCESS TO TRACKWAY REQUIREMENTS REFER TO SAFETY AND SECURITY DESIGN REQUIREMENTS FOR INFRASTRUCTURE ELEMENTS AND CIVIL DESIGN CRITERIA.

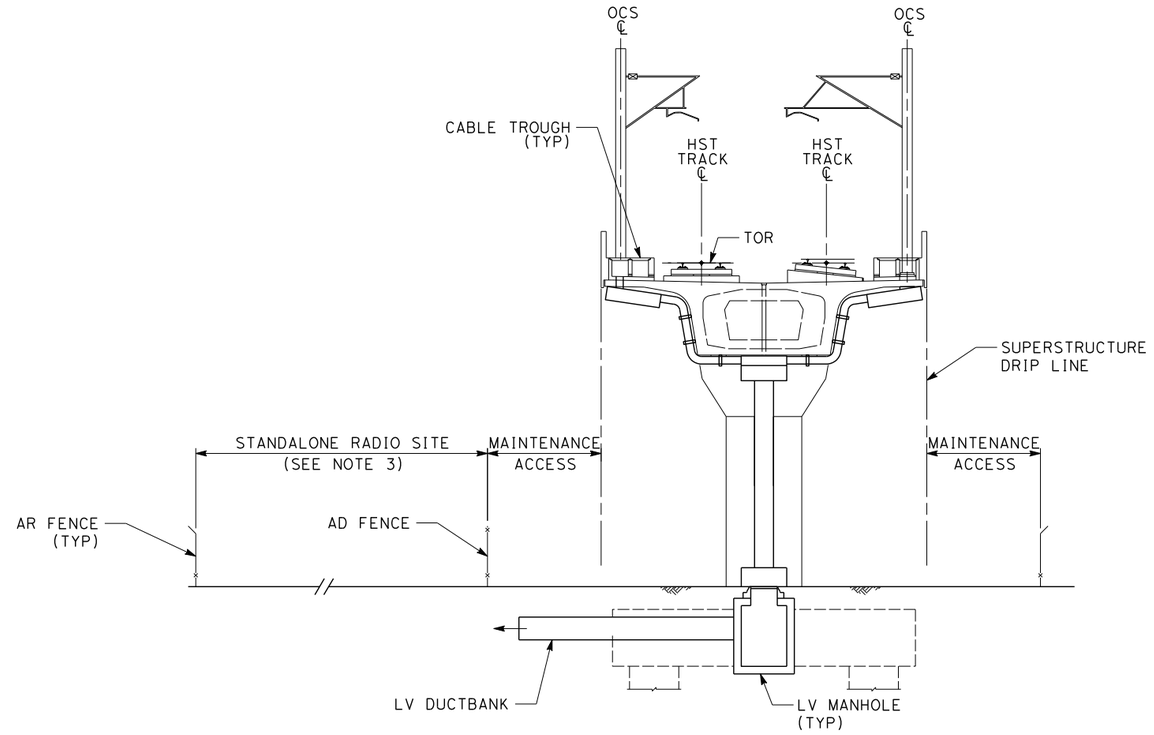

TYPICAL SECTION

STANDALONE RADIO SITE AT AERIAL TRACKWAY

RFP No. HSR 14-32 – INITIAL RELEASE - 05/27/2015

Mincio 9/30/2014 12:48:00 PM CAHSRP.TBL CHSR_half_black.plt C:\Users\mincio\Desktop\New folder (3)\DD-CO-G051.dgn

REV	DATE	BY	CHK	APP	DESCRIPTION

DESIGNED BY C. DALOIA
DRAWN BY V. LAVERDE
CHECKED BY B. MCNALLY
IN CHARGE B. BANKS
DATE 8/29/2014

PARSONS BRINCKERHOFF

CALIFORNIA HIGH-SPEED RAIL AUTHORITY

CALIFORNIA HIGH-SPEED TRAIN PROJECT
COMMUNICATIONS DIRECTIVE

SYSTEMS SITE
STANDALONE RADIO SITE
AERIAL

CONTRACT NO.
DRAWING NO. DD-CO-G051
SCALE NO SCALE
SHEET NO.

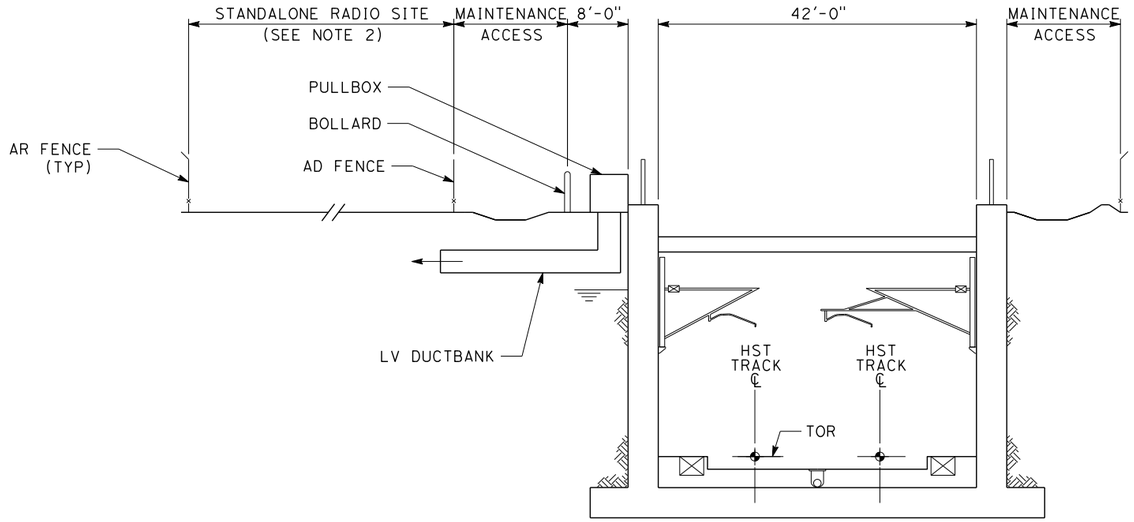

TYPICAL SECTION

STANDALONE RADIO SITE ADJACENT TO TRENCH HST TRACKWAY

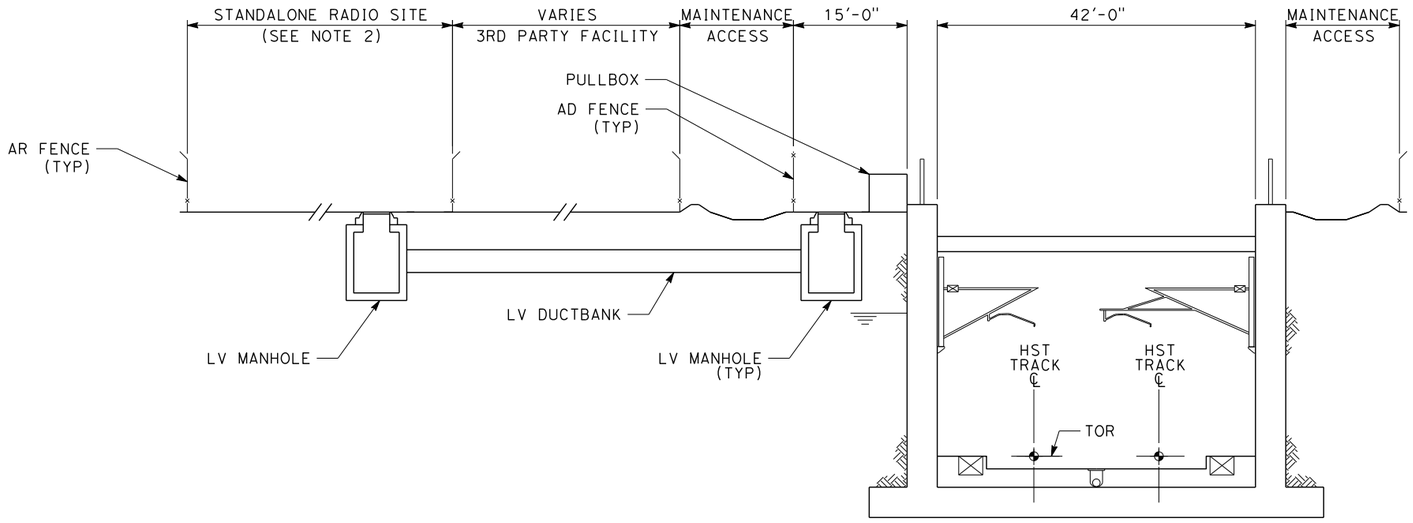

TYPICAL SECTION

STANDALONE RADIO SITE AWAY FROM TRENCH HST TRACKWAY

NOTES:

1. SYSTEM SITES AT TRENCH TRACKWAY ARE UNDESIRED. THESE CROSS-SECTIONS ARE ONLY APPLICABLE IF AT-GRADE SOLUTION IS DEMONSTRATED TO VIOLATE SITE SPACING REQUIREMENTS OR OTHER CRITICAL CRITERIA.
2. FOR RETAINED-FILLED TRACKWAYS, REINFORCED CONCRETE RETAINING WALLS SHALL BE USED AT SYSTEMS SITES.
3. TYPICAL CROSS-SECTIONAL WIDTH SHOWN SHALL BE PROVIDED FOR A MINIMUM LENGTH EQUAL TO THE LONGITUDINAL DIMENSION OF THE SYSTEMS SITE.
4. FOR STANDALONE RADIO SITE REQUIREMENTS REFER TO COMMUNICATIONS SYSTEMS SITE REQUIREMENTS.
5. FOR ACCESS RESTRICTION FENCING AND BERM DETAILS, REFER TO CIVIL DIRECTIVE DRAWINGS.
6. TRACK SYSTEMS AND DRAINAGE ARE SCHEMATIC AND DO NOT REPRESENT DESIGN. FOR SITE DRAINAGE REQUIREMENTS REFER TO DRAINAGE DIRECTIVE DRAWINGS.
7. FOR ACCESS ROADS, ACCESS GATE AND ACCESS TO TRACKWAY REQUIREMENTS REFER TO SAFETY AND SECURITY DESIGN REQUIREMENTS FOR INFRASTRUCTURE ELEMENTS AND CIVIL DESIGN CRITERIA.
8. SYSTEM SITES AWAY FROM TRACKWAY, SEPARATED BY A THIRD-PARTY RIGHT-OF-WAY ARE UNDESIRED. AWAY CROSS-SECTION IS ONLY APPLICABLE IF ADJACENT SOLUTION IS DEMONSTRATED TO VIOLATE SITE SPACING REQUIREMENTS OR OTHER CRITICAL CRITERIA.
9. LOW VOLTAGE UNDERGROUND DUCTBANK AND MANHOLES TO BE PROVIDED UNDERNEATH 3RD PARTY RIGHT-OF-WAY.

RFP No. HSR 14-32 – INITIAL RELEASE - 05/27/2015

REV	DATE	BY	CHK	APP	DESCRIPTION

DESIGNED BY C. DALOIA
DRAWN BY V. LAVERDE
CHECKED BY B. MCNALLY
IN CHARGE B. BANKS
DATE 8/29/2014

PARSONS BRINCKERHOFF

CALIFORNIA HIGH-SPEED RAIL AUTHORITY

CALIFORNIA HIGH-SPEED TRAIN PROJECT
COMMUNICATIONS DIRECTIVE

SYSTEMS SITE
STANDALONE RADIO SITE
TRENCH

CONTRACT NO.
DRAWING NO. DD-CO-G052
SCALE NO SCALE
SHEET NO.

Mincio 9/30/2014 12:48:01 PM CAHSRP.TBL CHSR_half_black.plt C:\Users\mincio\Desktop\New folder (3)\DD-CO-G052.dgn

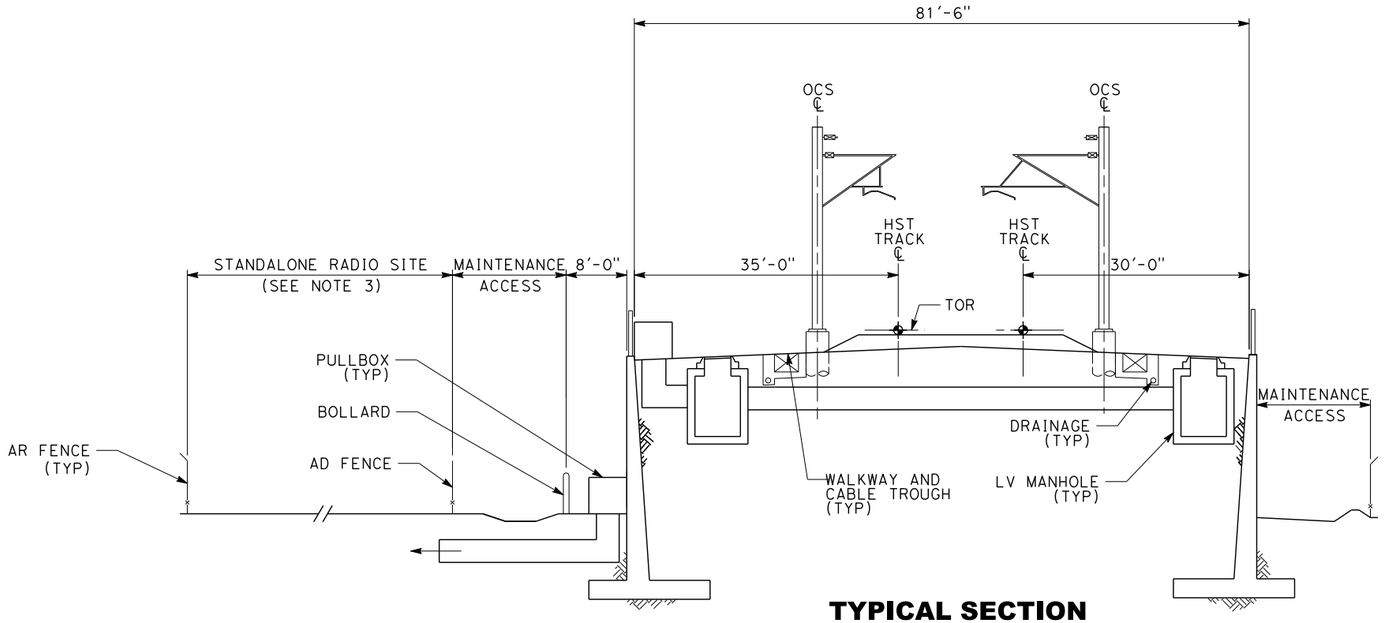

TYPICAL SECTION

STANDALONE RADIO SITE ADJACENT TO HST TRACKWAY RETAINING WALL

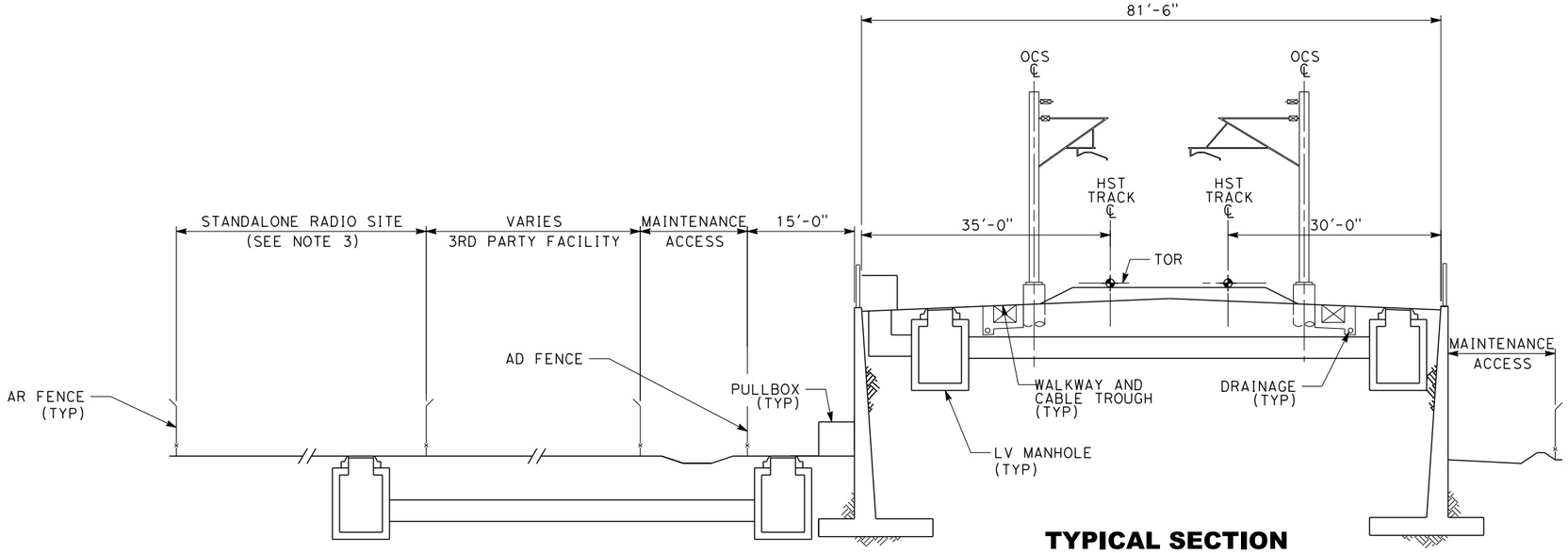

TYPICAL SECTION

STANDALONE RADIO SITE AWAY FROM HST TRACKWAY RETAINING WALL

NOTES:

1. SYSTEM SITES AT RETAINED FILL TRACKWAY ARE UNDESIRED. THESE CROSS-SECTIONS ARE ONLY APPLICABLE IF AT-GRADE SOLUTION IS DEMONSTRATED TO VIOLATE SITE SPACING REQUIREMENTS OR OTHER CRITICAL CRITERIA.
2. FOR RETAINED-FILLED TRACKWAYS, REINFORCED CONCRETE RETAINING WALLS SHALL BE USED AT SYSTEMS SITES.
3. TYPICAL CROSS-SECTIONAL WIDTH SHOWN SHALL BE PROVIDED FOR A MINIMUM LENGTH EQUAL TO THE LONGITUDINAL DIMENSION OF THE SYSTEMS SITE.
4. FOR STANDALONE RADIO SITE REQUIREMENTS REFER TO COMMUNICATIONS SYSTEMS SITE REQUIREMENTS.
5. FOR ACCESS RESTRICTION FENCING AND BERM DETAILS, REFER TO CIVIL DIRECTIVE DRAWINGS.
6. TRACK SYSTEMS AND DRAINAGE ARE SCHEMATIC AND DO NOT REPRESENT DESIGN. FOR SITE DRAINAGE REQUIREMENTS REFER TO DRAINAGE DIRECTIVE DRAWINGS.
7. FOR ACCESS ROADS, ACCESS GATE AND ACCESS TO TRACKWAY REQUIREMENTS REFER TO SAFETY AND SECURITY DESIGN REQUIREMENTS FOR INFRASTRUCTURE ELEMENTS AND CIVIL DESIGN CRITERIA.
8. A LOW VOLTAGE UNDERTRACK DUCTBANK WITH 2 LOW VOLTAGE MANHOLES TO BE PROVIDED AT SYSTEMS SITE. REFER TO COMMUNICATIONS DESIGN CRITERIA MANUAL AND DIRECTIVE DRAWINGS FOR LOW VOLTAGE UNDERTRACK CONDUIT DUCTBANK AND MANHOLE REQUIREMENTS.
9. SYSTEM SITES AWAY FROM TRACKWAY, SEPARATED BY A THIRD-PARTY RIGHT-OF-WAY ARE UNDESIRED. AWAY CROSS-SECTION IS ONLY APPLICABLE IF ADJACENT SOLUTION IS DEMONSTRATED TO VIOLATE SITE SPACING REQUIREMENTS OR OTHER CRITICAL CRITERIA.
10. LOW VOLTAGE UNDERGROUND DUCTBANK AND MANHOLE TO BE PROVIDED UNDERNEATH 3RD PARTY RIGHT-OF-WAY TO CONNECT TO LOW VOLTAGE UNDERTRACK MANHOLES AND DUCTBANK.

RFP No. HSR 14-32 – INITIAL RELEASE - 05/27/2015

REV	DATE	BY	CHK	APP	DESCRIPTION

DESIGNED BY C. DALOIA
DRAWN BY V. LAVERDE
CHECKED BY B. MCNALLY
IN CHARGE B. BANKS
DATE 8/29/2014

PARSONS BRINCKERHOFF

CALIFORNIA HIGH-SPEED RAIL AUTHORITY

CALIFORNIA HIGH-SPEED TRAIN PROJECT
COMMUNICATIONS DIRECTIVE

SYSTEMS SITE
STANDALONE RADIO SITE
RETAINED-FILL

CONTRACT NO.
DRAWING NO. DD-CO-G053
SCALE NO SCALE
SHEET NO.

9/30/2014 12:48:02 PM CAHSRP.tbl CHSR_half_black.plt C:\Users\mincio\Desktop\New folder (3)\DD-CO-G053.dgn Mincio