California High-Speed Rail Authority

RFP No.: HSR 13-57

# Request for Proposals for Design-Build Services for Construction Package 2-3

# Reference Material, Part B.1
# 15% Preliminary Design Plans

04/02/2014 - RFP No.: HSR 13-57

# CALIFORNIA HIGH-SPEED TRAIN

## Alignment Plans

# RECORD SET 15% DESIGN SUBMISSION

## Fresno to Bakersfield

## Plans and Profiles and Cross Sections

December 2013

CALIFORNIA High-Speed Rail Authority

04/02/2014 - RFP No.: HSR 13-57

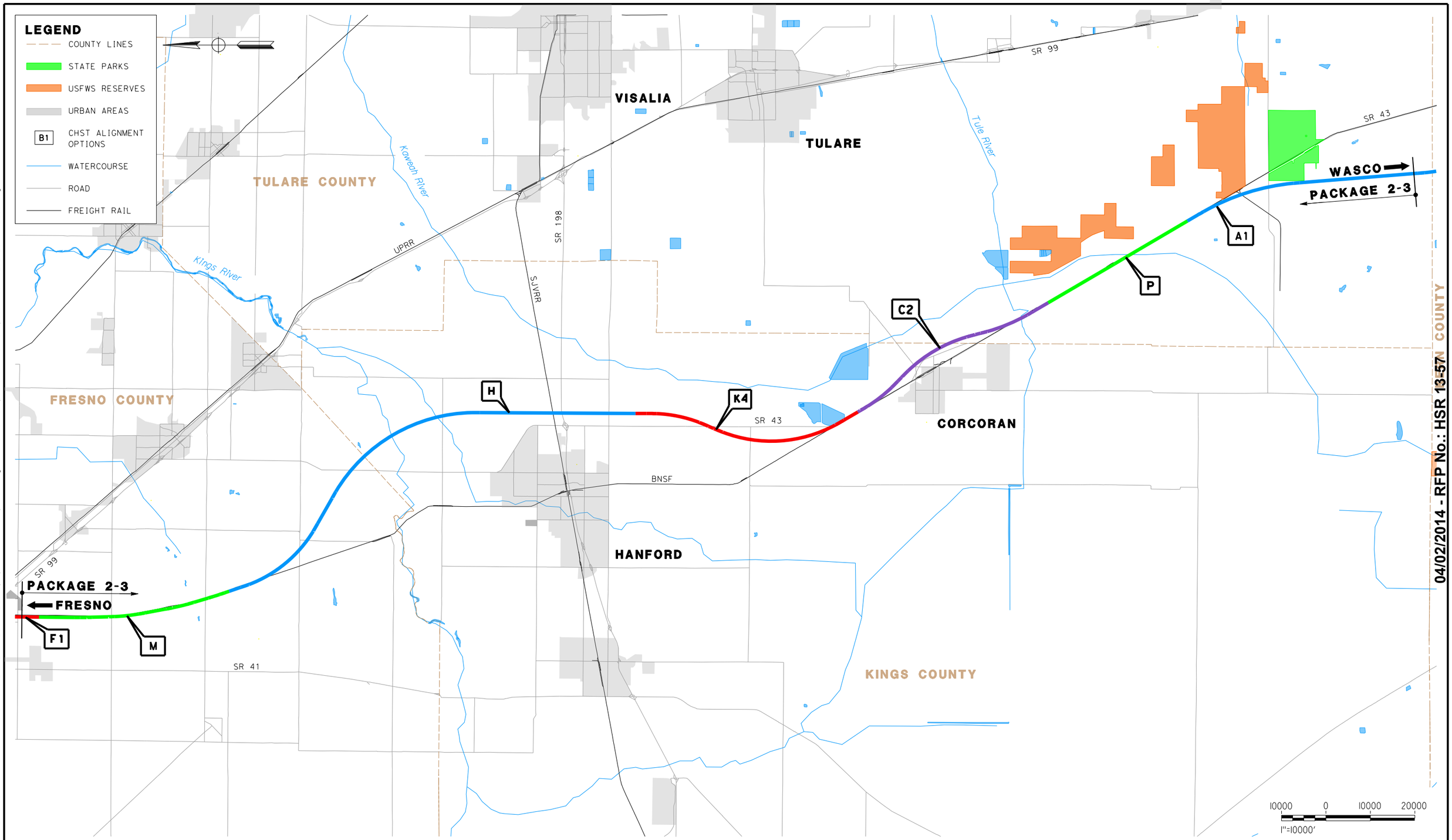


04/02/2014 - RFP No.: HSR 13-57

| REV | DATE | BY | CHK | APP | DESCRIPTION |
|---|---|---|---|---|---|

DESIGNED BY K. SEYMOUR
DRAWN BY P. TONKIN
CHECKED BY D. HUNT
IN CHARGE R. COFFIN
DATE 02/04/14

**PROPOSED PRELIMINARY DESIGN**

**NOT FOR CONSTRUCTION**

URS | HMM | ARUP
CALIFORNIA HIGH-SPEED TRAIN

CALIFORNIA
HIGH-SPEED RAIL AUTHORITY

# CALIFORNIA HIGH-SPEED TRAIN PROJECT
## FRESNO TO BAKERSFIELD
PACKAGE 2-3
ALIGNMENT
LOCATION MAP

CONTRACT NO. HSR 06-0003
DRAWING NO. TT-B0001
SCALE AS SHOWN
SHEET NO. 1 OF 8

c:\pwworking\hmm\external\paul.tonkin01-arup.com\d0178202\2S-TT-B0001.dgn
1/30/2014 2:49:06 PM CAHSRP-r1.tbl CHSR_PDF_half_color_200dpi.plt
paul.tonkin

## GENERAL SHEETS

| DRAWING No | DRAWING DESCRIPTION | SHEET No |
|---|---|---|
| TT-B0001 | ALIGNMENT - LOCATION MAP | 1 OF 8 |
| GE-A0019 | ALIGNMENT - INDEX OF SHEETS (SHEET 1 OF 2) | 2 OF 8 |
| GE-A0020 | ALIGNMENT - INDEX OF SHEETS (SHEET 2 OF 2) | 3 OF 8 |
| CB0010 | GENERAL - ABBREVIATIONS AND LEGENDS | 4 OF 8 |
| CB0011 | GENERAL - ABBREVIATIONS AND LEGENDS | 5 OF 8 |
| CB0012 | ALIGNMENT - CURVE DATA - SHEET 1 OF 2 | 6 OF 8 |
| CB0013 | ALIGNMENT - CURVE DATA - SHEET 2 OF 2 | 7 OF 8 |
| CB0016 | WILDLIFE CROSSINGS - LOCATION MAP | 8 OF 8 |

## ALIGNMENT F1 - FRESNO SUBSECTION

| DRAWING No | DRAWING DESCRIPTION | SHEET No |
|---|---|---|
| CB1650 | FRESNO SUBSECTION - ALIGNMENT F1 - STA. 257+24 TO 627+07 - KEY MAP | 1 OF 24 |
| ~~CB1657~~ | ~~FRESNO SUBSECTION - ALIGNMENT F1 - STA. 257+24 TO 261+00 - PLAN AND PROFILE~~ | ~~2 OF 24~~ |
| ~~CB1658~~ | ~~FRESNO SUBSECTION - ALIGNMENT F1 - STA. 261+00 TO 275+00 - PLAN AND PROFILE~~ | ~~3 OF 24~~ |
| ~~CB1659~~ | ~~FRESNO SUBSECTION - ALIGNMENT F1 - STA. 275+00 TO 289+00 - PLAN AND PROFILE~~ | ~~4 OF 24~~ |
| ~~CB1660~~ | ~~FRESNO SUBSECTION - ALIGNMENT F1 - STA. 289+00 TO 303+00 - PLAN AND PROFILE~~ | ~~5 OF 24~~ |
| ~~CB1661~~ | ~~FRESNO SUBSECTION - ALIGNMENT F1 - STA. 303+00 TO 317+25 - PLAN AND PROFILE~~ | ~~6 OF 24~~ |
| ~~CB1662~~ | ~~FRESNO SUBSECTION - ALIGNMENT F1 - STA. 317+25 TO 345+00 - PLAN AND PROFILE~~ | ~~7 OF 24~~ |
| ~~CB1663~~ | ~~FRESNO SUBSECTION - ALIGNMENT F1 - STA. 345+00 TO 373+00 - PLAN AND PROFILE~~ | ~~8 OF 24~~ |
| ~~CB1664~~ | ~~FRESNO SUBSECTION - ALIGNMENT F1 - STA. 373+00 TO 401+00 - PLAN AND PROFILE~~ | ~~9 OF 24~~ |
| ~~CB1665~~ | ~~FRESNO SUBSECTION - ALIGNMENT F1 - STA. 401+00 TO 429+00 - PLAN AND PROFILE~~ | ~~10 OF 24~~ |
| ~~CB1666~~ | ~~FRESNO SUBSECTION - ALIGNMENT F1 - STA. 429+00 TO 457+00 - PLAN AND PROFILE~~ | ~~11 OF 24~~ |
| ~~CB1667~~ | ~~FRESNO SUBSECTION - ALIGNMENT F1 - STA. 457+00 TO 485+00 - PLAN AND PROFILE~~ | ~~12 OF 24~~ |
| ~~CB1668~~ | ~~FRESNO SUBSECTION - ALIGNMENT F1 - STA. 485+00 TO 513+00 - PLAN AND PROFILE~~ | ~~13 OF 24~~ |
| ~~CB1669~~ | ~~FRESNO SUBSECTION - ALIGNMENT F1 - STA. 513+00 TO 541+00 - PLAN AND PROFILE~~ | ~~14 OF 24~~ |
| ~~CB1670~~ | ~~FRESNO SUBSECTION - ALIGNMENT F1 - STA. 541+00 TO 569+00 - PLAN AND PROFILE~~ | ~~15 OF 24~~ |
| CB1671 | FRESNO SUBSECTION - ALIGNMENT F1 - STA. 569+00 TO 598+00 - PLAN AND PROFILE | 16 OF 24 |
| CB1672 | FRESNO SUBSECTION - ALIGNMENT F1 - STA. 598+00 TO 627+07 - PLAN AND PROFILE | 17 OF 24 |
| ~~CB3010~~ | ~~FRESNO SUBSECTION - ALIGNMENT F1 - CROSS SECTIONS~~ | ~~18 OF 24~~ |
| ~~CB3011~~ | ~~FRESNO SUBSECTION - ALIGNMENT F1 - CROSS SECTIONS~~ | ~~19 OF 24~~ |
| ~~CB3012~~ | ~~FRESNO SUBSECTION - ALIGNMENT F1 - CROSS SECTIONS~~ | ~~20 OF 24~~ |
| ~~CB3013~~ | ~~FRESNO SUBSECTION - ALIGNMENT F1 - CROSS SECTIONS~~ | ~~21 OF 24~~ |
| ~~CB3014~~ | ~~FRESNO SUBSECTION - ALIGNMENT F1 - CROSS SECTIONS~~ | ~~22 OF 24~~ |
| ~~CB3015~~ | ~~FRESNO SUBSECTION - ALIGNMENT F1 - CROSS SECTIONS~~ | ~~23 OF 24~~ |
| CB3016 | FRESNO SUBSECTION - ALIGNMENT F1 - CROSS SECTIONS | 24 OF 24 |

## ALIGNMENT M - MONMOUTH SUBSECTION

| DRAWING No | DRAWING DESCRIPTION | SHEET No |
|---|---|---|
| CB1790 | MONMOUTH SUBSECTION - ALIGNMENT M - STA. 630+25 TO 1065+07 - KEY MAP | 1 OF 11 |
| CB1791 | MONMOUTH SUBSECTION - ALIGNMENT M - STA. 630+25 TO 687+00 - PLAN AND PROFILE | 2 OF 11 |
| CB1792 | MONMOUTH SUBSECTION - ALIGNMENT M - STA. 687+00 TO 743+00 - PLAN AND PROFILE | 3 OF 11 |
| CB1793 | MONMOUTH SUBSECTION - ALIGNMENT M - STA. 743+00 TO 799+00 - PLAN AND PROFILE | 4 OF 11 |
| CB1794 | MONMOUTH SUBSECTION - ALIGNMENT M - STA. 799+00 TO 855+00 - PLAN AND PROFILE | 5 OF 11 |
| CB1795 | MONMOUTH SUBSECTION - ALIGNMENT M - STA. 855+00 TO 911+00 - PLAN AND PROFILE | 6 OF 11 |
| CB1796 | MONMOUTH SUBSECTION - ALIGNMENT M - STA. 911+00 TO 967+00 - PLAN AND PROFILE | 7 OF 11 |
| CB1797 | MONMOUTH SUBSECTION - ALIGNMENT M - STA. 967+00 TO 1023+00 - PLAN AND PROFILE | 8 OF 11 |
| CB1798 | MONMOUTH SUBSECTION - ALIGNMENT M - STA. 1023+00 TO 1065+07 - PLAN AND PROFILE | 9 OF 11 |
| CB3140 | MONMOUTH SUBSECTION - ALIGNMENT M - CROSS SECTIONS | 10 OF 11 |
| CB3141 | MONMOUTH SUBSECTION - ALIGNMENT M - CROSS SECTIONS | 11 OF 11 |

## ALIGNMENT H - HANFORD SUBSECTION

| DRAWING No | DRAWING DESCRIPTION | SHEET No |
|---|---|---|
| CB1800 | HANFORD SUBSECTION - ALIGNMENT H - STA. 1065+07 TO 2144+63 - KEY MAP | 1 OF 31 |
| CB1808 | HANFORD SUBSECTION - ALIGNMENT H - STA. 1065+07 TO 1080+00 - PLAN AND PROFILE | 2 OF 31 |
| CB1809 | HANFORD SUBSECTION - ALIGNMENT H - STA. 1080+00 TO 1136+00 - PLAN AND PROFILE | 3 OF 31 |
| CB1810 | HANFORD SUBSECTION - ALIGNMENT H - STA. 1136+00 TO 1192+00 - PLAN AND PROFILE | 4 OF 31 |
| CB1811 | HANFORD SUBSECTION - ALIGNMENT H - STA. 1192+00 TO 1248+00 - PLAN AND PROFILE | 5 OF 31 |
| CB1812 | HANFORD SUBSECTION - ALIGNMENT H - STA. 1248+00 TO 1304+00 - PLAN AND PROFILE | 6 OF 31 |
| CB1813 | HANFORD SUBSECTION - ALIGNMENT H - STA. 1304+00 TO 1360+00 - PLAN AND PROFILE | 7 OF 31 |
| CB1814 | HANFORD SUBSECTION - ALIGNMENT H - STA. 1360+00 TO 1416+00 - PLAN AND PROFILE | 8 OF 31 |
| CB1815 | HANFORD SUBSECTION - ALIGNMENT H - STA. 1416+00 TO 1472+00 - PLAN AND PROFILE | 9 OF 31 |
| CB1816 | HANFORD SUBSECTION - ALIGNMENT H - STA. 1472+00 TO 1528+00 - PLAN AND PROFILE | 10 OF 31 |
| CB1817 | HANFORD SUBSECTION - ALIGNMENT H - STA. 1528+00 TO 1584+00 - PLAN AND PROFILE | 11 OF 31 |
| CB1818 | HANFORD SUBSECTION - ALIGNMENT H - STA. 1584+00 TO 1640+00 - PLAN AND PROFILE | 12 OF 31 |
| CB1819 | HANFORD SUBSECTION - ALIGNMENT H - STA. 1640+00 TO 1696+00 - PLAN AND PROFILE | 13 OF 31 |
| CB1820 | HANFORD SUBSECTION - ALIGNMENT H - STA. 1696+00 TO 1752+00 - PLAN AND PROFILE | 14 OF 31 |
| CB1821 | HANFORD SUBSECTION - ALIGNMENT H - STA. 1752+00 TO 1808+00 - PLAN AND PROFILE | 15 OF 31 |
| CB1822 | HANFORD SUBSECTION - ALIGNMENT H - STA. 1808+00 TO 1864+00 - PLAN AND PROFILE | 16 OF 31 |
| CB1823 | HANFORD SUBSECTION - ALIGNMENT H - STA. 1864+00 TO 1914+00 - PLAN AND PROFILE | 17 OF 31 |
| CB1824 | HANFORD SUBSECTION - ALIGNMENT H - STA. 1914+00 TO 1928+00 - PLAN AND PROFILE | 18 OF 31 |
| CB1825 | HANFORD SUBSECTION - ALIGNMENT H - STA. 1928+00 TO 1942+00 - PLAN AND PROFILE | 19 OF 31 |
| CB1826 | HANFORD SUBSECTION - ALIGNMENT H - STA. 1942+00 TO 1956+00 - PLAN AND PROFILE | 20 OF 31 |
| CB1827 | HANFORD SUBSECTION - ALIGNMENT H - STA. 1956+00 TO 1970+00 - PLAN AND PROFILE | 21 OF 31 |
| CB1828 | HANFORD SUBSECTION - ALIGNMENT H - STA. 1970+00 TO 1984+00 - PLAN AND PROFILE | 22 OF 31 |
| CB1829 | HANFORD SUBSECTION - ALIGNMENT H - STA. 1984+00 TO 2032+00 - PLAN AND PROFILE | 23 OF 31 |
| CB1830 | HANFORD SUBSECTION - ALIGNMENT H - STA. 2032+00 TO 2088+00 - PLAN AND PROFILE | 24 OF 31 |
| CB1831 | HANFORD SUBSECTION - ALIGNMENT H - STA. 2088+00 TO 2144+63 - PLAN AND PROFILE | 25 OF 31 |
| CB3151 | HANFORD SUBSECTION - ALIGNMENT H - CROSS SECTIONS | 26 OF 31 |
| CB3152 | HANFORD SUBSECTION - ALIGNMENT H - CROSS SECTIONS | 27 OF 31 |
| CB3153 | HANFORD SUBSECTION - ALIGNMENT H - CROSS SECTIONS | 28 OF 31 |
| CB3154 | HANFORD SUBSECTION - ALIGNMENT H - CROSS SECTIONS | 29 OF 31 |
| CB3155 | HANFORD SUBSECTION - ALIGNMENT H - CROSS SECTIONS | 30 OF 31 |
| CB3156 | HANFORD SUBSECTION - ALIGNMENT H - CROSS SECTIONS | 31 OF 31 |

04/02/2014 - RFP No.: HSR 13-57

| REV | DATE | BY | CHK | APP | DESCRIPTION |
|---|---|---|---|---|---|

DESIGNED BY P. TONKIN
DRAWN BY J. VALENZUELA
CHECKED BY K. SEYMOUR
IN CHARGE R. COFFIN
DATE 02/04/14

**PROPOSED PRELIMINARY DESIGN**

**NOT FOR CONSTRUCTION**

URS | HMM | ARUP
CALIFORNIA HIGH-SPEED TRAIN

CALIFORNIA
HIGH-SPEED RAIL AUTHORITY

**CALIFORNIA HIGH-SPEED TRAIN PROJECT**
**FRESNO TO BAKERSFIELD**
ALIGNMENT
INDEX OF SHEETS
SHEET 1 OF 2

CONTRACT NO. HSR 06-0003
DRAWING NO. GE-A0019
SCALE NO SCALE
SHEET NO. 2 OF 8

paul.tonkin 1/29/2014 11:57:10 AM CAHSRP-r1.tbl CHSR_PDF_half_black_200dpi.plt c:\pwworking\hmm\external\paul.tonkin01-arup.com\d0178202\25-GE-A0019.dgn

## ALIGNMENT K4 - KAWEAH SUBSECTION

| DRAWING No | DRAWING DESCRIPTION | SHEET No |
|---|---|---|
| CB1130 | KAWEAH SUBSECTION - ALIGNMENT K4 - STA. 2074+96 TO 2598+60 - KEY MAP | 1 OF 15 |
| CB1131 | KAWEAH SUBSECTION - ALIGNMENT K4 - STA. 2074+96 TO 2130+00 - PLAN AND PROFILE | 2 OF 15 |
| CB1132 | KAWEAH SUBSECTION - ALIGNMENT K4 - STA. 2130+00 TO 2186+00 - PLAN AND PROFILE | 3 OF 15 |
| CB1133 | KAWEAH SUBSECTION - ALIGNMENT K4 - STA. 2186+00 TO 2242+00 - PLAN AND PROFILE | 4 OF 15 |
| CB1134 | KAWEAH SUBSECTION - ALIGNMENT K4 - STA. 2242+00 TO 2298+00 - PLAN AND PROFILE | 5 OF 15 |
| CB1135 | KAWEAH SUBSECTION - ALIGNMENT K4 - STA. 2298+00 TO 2354+00 - PLAN AND PROFILE | 6 OF 15 |
| CB1136 | KAWEAH SUBSECTION - ALIGNMENT K4 - STA. 2354+00 TO 2410+00 - PLAN AND PROFILE | 7 OF 15 |
| CB1137 | KAWEAH SUBSECTION - ALIGNMENT K4 - STA. 2410+00 TO 2466+00 - PLAN AND PROFILE | 8 OF 15 |
| CB1138 | KAWEAH SUBSECTION - ALIGNMENT K4 - STA. 2466+00 TO 2522+00 - PLAN AND PROFILE | 9 OF 15 |
| CB1139 | KAWEAH SUBSECTION - ALIGNMENT K4 - STA. 2522+00 TO 2578+00 - PLAN AND PROFILE | 10 OF 15 |
| CB1140 | KAWEAH SUBSECTION - ALIGNMENT K4 - STA. 2578+00 TO 2598+60 - PLAN AND PROFILE | 11 OF 15 |
| CB3171 | KAWEAH SUBSECTION - ALIGNMENT K4 - CROSS SECTIONS | 12 OF 15 |
| CB3172 | KAWEAH SUBSECTION - ALIGNMENT K4 - CROSS SECTIONS | 13 OF 15 |
| CB3173 | KAWEAH SUBSECTION - ALIGNMENT K4 - CROSS SECTIONS | 14 OF 15 |
| CB3174 | KAWEAH SUBSECTION - ALIGNMENT K4 - CROSS SECTIONS | 15 OF 15 |

## ALIGNMENT C2 - CORCORAN SUBSECTION

| DRAWING No | DRAWING DESCRIPTION | SHEET No |
|---|---|---|
| CB1850 | CORCORAN BYPASS SUBSECTION - ALIGNMENT C2 - STA. 2594+81 TO 3096+00 - KEY MAP | 1 OF 16 |
| CB1861 | CORCORAN BYPASS SUBSECTION - ALIGNMENT C2 - STA. 2594+81 TO 2650+00 - PLAN AND PROFILE | 2 OF 16 |
| CB1862 | CORCORAN BYPASS SUBSECTION - ALIGNMENT C2 - STA. 2650+00 TO 2706+00 - PLAN AND PROFILE | 3 OF 16 |
| CB1863 | CORCORAN BYPASS SUBSECTION - ALIGNMENT C2 - STA. 2706+00 TO 2762+00 - PLAN AND PROFILE | 4 OF 16 |
| CB1864 | CORCORAN BYPASS SUBSECTION - ALIGNMENT C2 - STA. 2762+00 TO 2818+00 - PLAN AND PROFILE | 5 OF 16 |
| CB1865 | CORCORAN BYPASS SUBSECTION - ALIGNMENT C2 - STA. 2818+00 TO 2874+00 - PLAN AND PROFILE | 6 OF 16 |
| CB1866 | CORCORAN BYPASS SUBSECTION - ALIGNMENT C2 - STA. 2874+00 TO 2930+00 - PLAN AND PROFILE | 7 OF 16 |
| CB1867 | CORCORAN BYPASS SUBSECTION - ALIGNMENT C2 - STA. 2930+00 TO 2986+00 - PLAN AND PROFILE | 8 OF 16 |
| CB1868 | CORCORAN BYPASS SUBSECTION - ALIGNMENT C2 - STA. 2986+00 TO 3042+00 - PLAN AND PROFILE | 9 OF 16 |
| CB1869 | CORCORAN BYPASS SUBSECTION - ALIGNMENT C2 - STA. 3042+00 TO 3096+00 - PLAN AND PROFILE | 10 OF 16 |
| CB3255 | CORCORAN BYPASS SUBSECTION - ALIGNMENT C2 - CROSS SECTIONS | 11 OF 16 |
| CB3256 | CORCORAN BYPASS SUBSECTION - ALIGNMENT C2 - CROSS SECTIONS | 12 OF 16 |
| CB3257 | CORCORAN BYPASS SUBSECTION - ALIGNMENT C2 - CROSS SECTIONS | 13 OF 16 |
| CB3258 | CORCORAN BYPASS SUBSECTION - ALIGNMENT C2 - CROSS SECTIONS | 14 OF 16 |
| CB3259 | CORCORAN BYPASS SUBSECTION - ALIGNMENT C2 - CROSS SECTIONS | 15 OF 16 |
| CB3260 | CORCORAN BYPASS SUBSECTION - ALIGNMENT C2 - CROSS SECTIONS | 16 OF 16 |

## ALIGNMENT P - PIXLEY SUBSECTION

| DRAWING No | DRAWING DESCRIPTION | SHEET No |
|---|---|---|
| CB1300 | PIXLEY SUBSECTION - ALIGNMENT P - STA. 3096+00 TO 3459+24 - KEY MAP | 1 OF 9 |
| CB1301 | PIXLEY SUBSECTION - ALIGNMENT P - STA. 3096+00 TO 3152+00 - PLAN AND PROFILE | 2 OF 9 |
| CB1302 | PIXLEY SUBSECTION - ALIGNMENT P - STA. 3152+00 TO 3208+00 - PLAN AND PROFILE | 3 OF 9 |
| CB1303 | PIXLEY SUBSECTION - ALIGNMENT P - STA. 3208+00 TO 3264+00 - PLAN AND PROFILE | 4 OF 9 |
| CB1304 | PIXLEY SUBSECTION - ALIGNMENT P - STA. 3264+00 TO 3320+00 - PLAN AND PROFILE | 5 OF 9 |
| CB1305 | PIXLEY SUBSECTION - ALIGNMENT P - STA. 3320+00 TO 3376+00 - PLAN AND PROFILE | 6 OF 9 |
| CB1306 | PIXLEY SUBSECTION - ALIGNMENT P - STA. 3376+00 TO 3432+00 - PLAN AND PROFILE | 7 OF 9 |
| CB1307 | PIXLEY SUBSECTION - ALIGNMENT P - STA. 3432+00 TO 3459+24 - PLAN AND PROFILE | 8 OF 9 |
| CB3301 | PIXLEY SUBSECTION - ALIGNMENT P - CROSS SECTIONS | 9 OF 9 |

## ALIGNMENT A1 - ALLENSWORTH SUBSECTION

| DRAWING No | DRAWING DESCRIPTION | SHEET No |
|---|---|---|
| CB1400 | ALLENSWORTH BYPASS SUBSECTION - ALIGNMENT A1 - STA. 3919+50 TO 4926+16 - KEY MAP | 1 OF 21 |
| CB1401 | ALLENSWORTH BYPASS SUBSECTION - ALIGNMENT A1 - STA. 3919+50 TO 3976+00 - PLAN AND PROFILE | 2 OF 21 |
| CB1402 | ALLENSWORTH BYPASS SUBSECTION - ALIGNMENT A1 - STA. 3976+00 TO 4032+00 - PLAN AND PROFILE | 3 OF 21 |
| CB1750 | ALLENSWORTH BYPASS SUBSECTION - ALIGNMENT A1 - STA. 4032+00 TO 4088+00 - PLAN AND PROFILE | 4 OF 21 |
| CB1751 | ALLENSWORTH BYPASS SUBSECTION - ALIGNMENT A1 - STA. 4088+00 TO 4144+00 - PLAN AND PROFILE | 5 OF 21 |
| CB1752 | ALLENSWORTH BYPASS SUBSECTION - ALIGNMENT A1 - STA. 4144+00 TO 4200+00 - PLAN AND PROFILE | 6 OF 21 |
| CB1753 | ALLENSWORTH BYPASS SUBSECTION - ALIGNMENT A1 - STA. 4200+00 TO 4256+00 - PLAN AND PROFILE | 7 OF 21 |
| CB1754 | ALLENSWORTH BYPASS SUBSECTION - ALIGNMENT A1 - STA. 4256+00 TO 4312+00 - PLAN AND PROFILE | 8 OF 21 |
| CB1755 | ALLENSWORTH BYPASS SUBSECTION - ALIGNMENT A1 - STA. 4312+00 TO 4368+00 - PLAN AND PROFILE | 9 OF 21 |
| CB1756 | ALLENSWORTH BYPASS SUBSECTION - ALIGNMENT A1 - STA. 4368+00 TO 4424+00 - PLAN AND PROFILE | 10 OF 21 |
| CB1757 | ALLENSWORTH BYPASS SUBSECTION - ALIGNMENT A1 - STA. 4424+00 TO 4480+00 - PLAN AND PROFILE | 11 OF 21 |
| ~~CB1758~~ | ~~ALLENSWORTH BYPASS SUBSECTION - ALIGNMENT A1 - STA. 4480+00 TO 4536+00 - PLAN AND PROFILE~~ | ~~12 OF 21~~ |
| ~~CB1759~~ | ~~ALLENSWORTH BYPASS SUBSECTION - ALIGNMENT A1 - STA. 4536+00 TO 4592+00 - PLAN AND PROFILE~~ | ~~13 OF 21~~ |
| ~~CB1760~~ | ~~ALLENSWORTH BYPASS SUBSECTION - ALIGNMENT A1 - STA. 4592+00 TO 4648+00 - PLAN AND PROFILE~~ | ~~14 OF 21~~ |
| ~~CB1761~~ | ~~ALLENSWORTH BYPASS SUBSECTION - ALIGNMENT A1 - STA. 4648+00 TO 4704+00 - PLAN AND PROFILE~~ | ~~15 OF 21~~ |
| ~~CB1762~~ | ~~ALLENSWORTH BYPASS SUBSECTION - ALIGNMENT A1 - STA. 4707+00 TO 4760+00 - PLAN AND PROFILE~~ | ~~16 OF 21~~ |
| ~~CB1763~~ | ~~ALLENSWORTH BYPASS SUBSECTION - ALIGNMENT A1 - STA. 4760+00 TO 4816+00 - PLAN AND PROFILE~~ | ~~17 OF 21~~ |
| ~~CB1764~~ | ~~ALLENSWORTH BYPASS SUBSECTION - ALIGNMENT A1 - STA. 4816+00 TO 4872+00 - PLAN AND PROFILE~~ | ~~18 OF 21~~ |
| ~~CB1765~~ | ~~ALLENSWORTH BYPASS SUBSECTION - ALIGNMENT A1 - STA. 4872+00 TO 4926+16 - PLAN AND PROFILE~~ | ~~19 OF 21~~ |
| CB3401 | ALLENSWORTH BYPASS SUBSECTION - ALIGNMENT A1 - CROSS SECTIONS | 20 OF 21 |
| CB3402 | ALLENSWORTH BYPASS SUBSECTION - ALIGNMENT A1 - CROSS SECTIONS | 21 OF 21 |

04/02/2014 - RFP No.: HSR 13-57

paul.tonkin 1/29/2014 12:03:49 PM CAHSRP-r1.tbl CHSR_PDF_half_black_200dpi.plt c:\pwworking\nmm\external\paul.tonkin01-arup.com\d0178202\2S-GE-A0020.dgn

| REV | DATE | BY | CHK | APP | DESCRIPTION |
|---|---|---|---|---|---|

DESIGNED BY P. TONKIN
DRAWN BY J. VALENZUELA
CHECKED BY K. SEYMOUR
IN CHARGE R. COFFIN
DATE 02/04/14

**PROPOSED PRELIMINARY DESIGN**

**NOT FOR CONSTRUCTION**

URS | HMM | ARUP
CALIFORNIA HIGH-SPEED TRAIN

CALIFORNIA
HIGH-SPEED RAIL AUTHORITY

**CALIFORNIA HIGH-SPEED TRAIN PROJECT**
**FRESNO TO BAKERSFIELD**
ALIGNMENT
INDEX OF SHEETS
SHEET 2 OF 2

CONTRACT NO. HSR 06-0003
DRAWING NO. GE-A0020
SCALE NO SCALE
SHEET NO. 3 OF 8

## A

| | |
|---|---|
| AB | AGGREGATE BASE |
| ABBC | ASBESTOS BONDED BITUMINOUS COATED |
| ABM | AIR-BLOWN MORTAR |
| ABN | ABANDON |
| ABUT | ABUTMENT |
| AC | ASPHALT CONCRETE |
| ACB | ASPHALT CONCRETE BASE |
| ACP | ASBESTOS CEMENT PIPE |
| ADL | ADDED DEAD LOAD |
| ADJ | ADJUST |
| AFES | ALTERNATIVE FLARED END SECTION |
| AHD | AHEAD |
| ALT | ALTERNATE |
| AM | TIME FROM MIDNIGHT TO NOON |
| AP | ALTERNATIVE PIPE |
| APC | ALTERNATIVE PIPE CULVERT |
| APPROX | APPROXIMATE |
| APU | ALTERNATIVE PIPE UNDERDRAIN |
| ARS | ACCELERATION RESPONSE SPECTRUM |
| AR | ACCESS RESTRICTION |
| AS | AGGREGATE SUBBASE |
| ASRP | ALUMINUM SPIRAL RIB PIPE |
| ASSY | ASSEMBLY |
| ATPB | ASPHALT TREATED PERMEABLE BASE |
| ATPM | ASPHALT TREATED PERMEABLE MATERIAL |
| AVE | AVENUE |
| AVG | AVERAGE |
| @ | AT |

## B

| | |
|---|---|
| BAGR | BRIDGE APPROACH GUARD RAILING |
| BB | BEGINNING OF BRIDGE |
| BC | BEGIN HORIZONTAL CURVE |
| BCC | BALANCED CANTILEVER CONSTRUCTION |
| BCR | BEGIN CURB RETURN |
| BEG | BEGIN |
| BIT CTD | BITUMINOUS COATED |
| BK | BACK |
| BKF | BACKFILL |
| BLDG | BUILDING |
| BLM | BRIDGE-LOG MILE |
| BLVD | BOULEVARD |
| BM | BENCH MARK |
| BND | BOUND |
| BNSF | BURLINGTON NORTH & SANTA FE |
| BOT | BOTTOM |
| BR | BRIDGE |
| BRG | BEARING |
| BTU | BRITISH THERMAL UNIT |
| BVC | BEGIN VERTICAL CURVE |
| BW | BARBED WIRE |

## C

| | |
|---|---|
| CAA | CABLE ANCHOR ASSEMBLY |
| CAP | CORRUGATED ALUMINUM PIPE |
| CAPA | CORRUGATED ALUMINUM PIPE ARCH |
| CAS | CONSTRUCTION AREA SIGN |
| CB | CONCRETE BARRIER |
| CBW | CONCRETE BLOCK WALL |
| C-C | CENTER TO CENTER |

## C CONTINUED

| | |
|---|---|
| CHSRA | CALIFORNIA HIGH SPEED RAIL AUTHORITY |
| CHST | CALIFORNIA HIGH SPEED TRAIN |
| CHSR | CALIFORNIA HIGH SPEED RAIL |
| CG | CENTER OF GRAVITY |
| CHNL | CHANNEL |
| CI | CAST IRON |
| CIDH | CAST-IN-DRILLED-HOLE |
| CIP,C-I-P | CAST-IN-PLACE, CAST IRON PIPE |
| CIPCP | CAST IN PLACE CONCRETE PIPE |
| CISS | CAST-IN-STEEL-SHELL |
| CJP | COMPLETE JOINT PENETRATION |
| CL | CENTERLINE, CLASS |
| CL2 | CLASS 2 |
| CL-6 | CHAIN LINK FENCE (6 FT) |
| CLR | CLEAR, CLEARANCE |
| CM | CORRUGATED METAL |
| CMP | CORRUGATED METAL PIPE |
| CO | COUNTY |
| COL | COLUMN |
| CONC | CONCRETE |
| COND | CONDUIT |
| CONN | CONNECTOR |
| CONST | CONSTRUCT, CONSTRUCTION |
| CONT | CONTINUOUS |
| COORD | COORDINATE |
| CP | CLEARANCE POINT |
| CR | CREEK |
| CRCP | CONTINUOUS REINFORCED CONCRETE PAVEMENT |
| CRSP | CONCRETED ROCK SLOPE PROTECTION |
| CS | CURVE TO SPIRAL |
| CSP | CORRUGATED STEEL PIPE |
| CSPA | CORRUGATED STEEL PIPE ARCH |
| CTB | CEMENT TREATED BASE |
| CTPB | CEMENT TREATED PERMEABLE BASE |
| CTPM | CEMENT TREATED PERMEABLE MATERIAL |
| CTRS | CENTERS |
| CVFPB | CENTRAL VALLEY FLOOD PROTECTION BOARD |
| CULV | CULVERT |
| ℄ | CENTERLINE |

## D

| | |
|---|---|
| D | DEPTH |
| DD | DOWNDRAIN, DIRECTIVE DRILLING |
| DBL | DOUBLE |
| DEG | DEGREE |
| DEL | DELINEATOR |
| DET | DETAIL, DETOUR |
| DF | DOUGLAS FIR |
| DI | DRAINAGE INLET, DROP INLET |
| DIA | DIAMETER |
| DIAPH | DIAPHRAGM |
| DIST | DISTANCE, DISTRICT |
| DMBB | DOUBLE METAL BEAM BARRIER |
| DR | DRIVE |
| DTBB | DOUBLE THRIE BEAM BARRIER |
| DWY | DRIVEWAY |

## E

| | |
|---|---|
| E | EAST, EASTING |
| EA | ACTUAL SUPERELEVATION |
| EU | UNBALANCED SUPERELEVATION |

## E CONTINUED

| | |
|---|---|
| EASE | EASEMENT |
| EB | END OF BRIDGE, EASTBOUND |
| EC | END HORIZONTAL CURVE |
| ECR | END CURB RETURN |
| ED | EDGE DRAIN |
| EDC | EDGE DRAIN CLEANOUT |
| EDO | EDGE DRAIN OUTLET |
| EDV | EDGE DRAIN VENT |
| ELEC | ELECTROLIER |
| ELECT | ELECTRIC |
| ELEV | ELEVATION |
| EMB | EMBANKMENT |
| ENGR | ENGINEER |
| EOD | EDGE OF DECK |
| EP | EDGE OF PAVEMENT |
| EQ | EQUATION, EQUAL |
| ES | EDGE OF SHOULDER |
| ETW | EDGE OF TRAVELED WAY |
| EVC | END VERTICAL CURVE |
| EW | ENDWALL |
| EXC | EXCAVATION |
| EXIST, EX. | EXISTING |
| EXP | EXPANSION |
| EXP JT | EXPANSION JOINT |
| EXWY | EXPRESSWAY |
| EXT | EXTERIOR |

## F

| | |
|---|---|
| F & C | FRAME AND COVER |
| F & G | FRAME AND GRATE |
| FB | FLOOR BEAM |
| F-B | FRESNO TO BAKERSFIELD |
| FDN | FOUNDATION |
| FEBT | FACING EASTBOUND TRAFFIC |
| FES | FLARED END SECTION |
| FF | FILTER FABRIC |
| FG | FINISHED GRADE |
| FH | FIRE HYDRANT |
| FIG | FIGURE |
| FL | FLOW LINE |
| FNBT | FACING NORTHBOUND TRAFFIC |
| FOC | FACE OF CONCRETE |
| FR RD | FRONTAGE ROAD |
| FS | FAR SIDE, FINISHED SURFACE |
| FSBT | FACING SOUTHBOUND TRAFFIC |
| FT | FOOT, FEET |
| FTG | FOOTING |
| FWBT | FACING WESTBOUND TRAFFIC |
| FWY | FREEWAY |
| FPLM | FULL SPAN PRECAST LAUNCHING METHOD |

## G

| | |
|---|---|
| G | ACCELERATION DUE TO GRAVITY |
| GA | GAGE |
| GALV | GALVANIZED |
| GP | GRADING PLANE |
| GR | GUARD RAILING |
| GSP | GALVANIZED STEEL PIPE |
| GTR | GUTTER |

## H

| | |
|---|---|
| H | HEIGHT |
| HR | HOUR |
| HD | HORIZONTAL DRAIN |
| HDWL | HEADWALL |
| HEX HD | HEXAGONAL HEAD |
| HMA | HOT MIXED ASPHALT |
| HORIZ | HORIZONTAL |
| HP | HINGE POINT, HORSEPOWER |
| HPS | HIGH PERFORMANCE STEEL |
| HS | HIGH STRENGTH |
| HST | HIGH SPEED TRAIN |
| HSR | HIGH SPEED RAIL |
| HW | HEADWALL, HIGH WATER |
| HWM | HIGH WATER MARK |
| HWY | HIGHWAY |

## I

| | |
|---|---|
| IB | IMPORTED BORROW |
| ID | INSIDE DIAMETER |
| IF | INSIDE FACE |
| IN | INCH, INCHES |
| INT | INTERIOR |
| INV | INVERT |
| IRR | IRRIGATION |

## J

| | |
|---|---|
| JCT | JUNCTION |
| JP | JOINT POLE |
| JPCP | JOINTED PLAIN CONCRETE PAVEMENT |
| JS | JUNCTION STRUCTURE |
| JT | JOINT |

## K

| | |
|---|---|
| K | DISTANCE TO ACHIEVE 1% GRADE CHANGE |

## L

| | |
|---|---|
| L | LENGTH |
| LAT | LATITUDE |
| LCB | LEAN CONCRETE BASE |
| LN | LANE |
| LOC | LOCATION |
| LOL | LAYOUT LINE |
| LONG | LONGITUDE |
| LONGIT | LONGITUDINAL |
| LS | LENGTH OF SPIRAL |
| LC | LENGTH OF CURVE |
| LT | LEFT |

## M

| | |
|---|---|
| MAINT | MAINTENANCE |
| MAX | MAXIMUM |
| MB | METAL BEAM |
| MBB | METAL BEAM BARRIER |
| MBGR | METAL BEAM GUARD RAILING |
| MED | MEDIAN |
| M-F | MERCED TO FRESNO |
| MH | MANHOLE |
| MIN | MINIMUM |
| MISC | MISCELLANEOUS |
| MISC I & S | MISCELLANEOUS IRON AND STEEL |
| MKR | MARKER |
| M/L | MAIN LINE (RAILWAY) |

## M CONTINUED

| | |
|---|---|
| MOD | MODIFIED, MODIFY |
| MON | MONUMENT |
| MP | METAL PLATE |
| MPGR | METAL PLATE GUARD RAILING |
| MPH | MILES PER HOUR |
| MR | MOVEMENT RATING |
| MSE | MECHANICALLY STABILIZED EARTH |
| MTL | MATERIAL |
| MSS | MOVING SCAFFOLDING SYSTEM |

## N

| | |
|---|---|
| N | NORTH, NORTHING |
| NB | NORTHBOUND |
| NO. | NUMBER (MUST HAVE PERIOD) |
| NOS. | NUMBERS (MUST HAVE PERIOD) |
| NPS | NOMINAL PIPE SIZE |
| NS | NEAR SIDE |
| NTS | NOT TO SCALE |
| N/A | NOT APPLICABLE |

## O

| | |
|---|---|
| OBLR | OBLITERATE |
| OC | OVERCROSSING |
| OCS | OVERHEAD CONTACT SYSTEM |
| OD | OUTSIDE DIAMETER |
| OF | OUTSIDE FACE |
| OG | ORIGINAL GROUND |
| OGAC | OPEN GRADED ASPHALT CONCRETE |
| OH | OVERHEAD |
| O-O | OUT TO OUT |
| OPP | OPPOSITE |

## P

| | |
|---|---|
| P | PAGE |
| PAP | PERFORATED ALUMINUM PIPE |
| PB | PULL BOX |
| PC | POINT OF CURVATURE, PRECAST |
| PCC | POINT OF COMPOUND CURVE, PORTLAND CEMENT CONCRETE |
| PCP | PERFORATED CONCRETE PIPE, PRESTRESSED CONCRETE PIPE |
| PCVC | POINT OF COMPOUND VERTICAL CURVE |
| PED | PEDESTRIAN |
| PED OC | PEDESTRIAN OVERCROSSING |
| PED UC | PEDESTRIAN UNDERCROSSING |
| PERM MTL | PERMEABLE MATERIAL |
| PG | PROFILE GRADE |
| PI | POINT OF INTERSECTION |
| PJP | PARTIAL JOINT PENETRATION |
| ℙ,PL | PLATE |
| P/L | PROPERTY LINE |
| PM | POST MILE, TIME FROM NOON TO MIDNIGHT |
| PN | PAVING NOTCH |
| POB | POINT OF BEGINNING |
| POC | POINT OF HORIZONTAL CURVE |
| POE | POINT OF ENDING |
| POT | POINT OF TANGENT |
| POVC | POINT OF VERTICAL CURVE |
| PP | PIPE PILE, PLASTIC PIPE, POWER POLE |
| PPL | PREFORMED PERMEABLE LINER |
| PPP | PERFORATED PLASTIC PIPE |
| PRC | POINT OF REVERSE CURVE |

04/02/2014 - RFP No.: HSR 13-57

| REV | DATE | BY | CHK | APP | DESCRIPTION |
|---|---|---|---|---|---|

DESIGNED BY K. SEYMOUR
DRAWN BY P. TONKIN
CHECKED BY D. HUNT
IN CHARGE R. COFFIN
DATE 02/04/14

**RECORD SET 15% DESIGN SUBMISSION - NOT FOR CONSTRUCTION**

URS | HMM | ARUP
CALIFORNIA HIGH-SPEED TRAIN

CALIFORNIA
HIGH-SPEED RAIL AUTHORITY

# CALIFORNIA HIGH-SPEED TRAIN PROJECT
# FRESNO TO BAKERSFIELD
GENERAL
ABBREVIATIONS AND LEGENDS
SHEET 1 OF 2

CONTRACT NO. HSR 06-0003
DRAWING NO. CB0010
SCALE NO SCALE
SHEET NO. 4 OF 8

1/27/2014 9:36:06 PM c:\pwworking\hmm\external\paul.tonkin01-arup.com\d0178202\VFB-CB-0010.dgn Paul.Tonkin

### P CONTINUED

| | |
|---|---|
| **PRF** | PAVEMENT REINFORCING FABRIC |
| **PRVC** | POINT OF REVERSE VERTICAL CURVE |
| **PS&E** | PLANS, SPECIFICATIONS AND ESTIMATES |
| **PS, P/S** | PRESTRESSED, PARALLEL STATION |
| **PSP** | PERFORATED STEEL PIPE |
| **PT** | POINT OF TANGENCY |
| **PVC** | POLYVINYL CHLORIDE |
| **PVI** | POINT OF VERTICAL INTERSECTION |
| **PVMT** | PAVEMENT |
| **PVP** | MAINTENANCE VEHICLE PULLOUT |

### Q

| | |
|---|---|
| **QTY** | QUANTITY |

### R

| | |
|---|---|
| **R** | RADIUS |
| **R & D** | REMOVE AND DISPOSE |
| **R & S** | REMOVE AND SALVAGE |
| **R/C** | RATE OF CHANGE |
| **RCA** | REINFORCED CONCRETE ARCH |
| **RCB** | REINFORCED CONCRETE BOX |
| **RCP** | REINFORCED CONCRETE PIPE |
| **RCPA** | REINFORCED CONCRETE PIPE ARCH |
| **RD** | ROAD |
| **REINF** | REINFORCED, REINFORCEMENT, REINFORCING |
| **REL** | RELOCATE |
| **REPL** | REPLACEMENT |
| **RET** | RETAINING |
| **REV** | REVISED |
| **RDWY** | ROADWAY |
| **RM** | ROAD-MIXED |
| **RP** | RADIUS POINT, REFERENCE POINT |
| **RR** | RAILROAD |
| **RSP** | ROCK SLOPE PROTECTION |
| **RT** | RIGHT |
| **RTE** | ROUTE |
| **RW** | REDWOOD, RETAINING WALL |
| **R/W, ROW** | RIGHT OF WAY |
| **RWY** | RAILWAY |

### S

| | |
|---|---|
| **S** | SOUTH, SUPPLEMENT |
| **SAE** | STRUCTURE APPROACH EMBANKMENT |
| **SALV** | SALVAGE |
| **SAPP** | STRUCTURAL ALUMINUM PLATE PIPE |
| **SB** | SOUTHBOUND |
| **SC** | SPIRAL TO CURVE |
| **SCSP** | SLOTTED CORRUGATED STEEL PIPE |
| **SD** | STORM DRAIN |
| **SEC** | SECOND |
| **SECT** | SECTION |
| **SEP** | SEPARATION |
| **SG** | SUBGRADE |
| **SHLD** | SHOULDER |
| **SHT** | SHEET |
| **SIM** | SIMILAR |
| **S** | STATION LINE |
| **SM** | SELECTED MATERIAL |
| **SPEC** | SPECIAL, SPECIFICATIONS |
| **SPP** | SLOTTED PLASTIC PIPE |
| **SS** | SLOPE STAKE, SPIRAL TO SPIRAL |

### S CONTINUED

| | |
|---|---|
| **SSBM** | STRAP AND SADDLE BRACKET METHOD |
| **SSD** | STRUCTURAL SECTION DRAIN |
| **SSPA** | STRUCTURAL STEEL PLATE ARCH |
| **SSPP** | STRUCTURAL STEEL PLATE PIPE |
| **SSPPA** | STRUCTURAL STEEL PLATE PIPE ARCH |
| **SSRP** | STEEL SPIRAL RIB PIPE |
| **SR** | STATE ROUTE |
| **ST** | STREET, SPIRAL TO TANGENT |
| **STA** | STATION |
| **STBB** | SINGLE THRIE BEAM BARRIER |
| **STD** | STANDARD |
| **STR** | STRUCTURE |
| **SRS** | STAND ALONE RADIO SITE |
| **SURF** | SURFACING |
| **SW** | SIDEWALK, SOUND WALL |
| **SWR** | SEWER |
| **SWS** | SWITCHING STATION |
| **SYM** | SYMMETRICAL |
| **S4S** | SURFACE 4 SIDES |
| **SJVR** | SAN JOAQUIN VALLEY RAILROAD |

### T

| | |
|---|---|
| **T** | SEMI-TANGENT |
| **TAB** | TABLET |
| **TAN** | TANGENT |
| **TBB** | THRIE BEAM BARRIER |
| **TBR** | TIMBER |
| **TC** | TOP OF CURB, TANGENT TO CURVE |
| **TCB** | TRAFFIC CONTROL BOX |
| **TEL** | TELEPHONE |
| **TEMP** | TEMPORARY |
| **TG** | TOP OF GRADE |
| **TOT** | TOTAL |
| **TM** | TECHNICAL MEMORANDUM |
| **TP** | TELEPHONE POLE |
| **TPB** | TREATED PERMEABLE BASE |
| **TPM** | TREATED PERMEABLE MATERIAL |
| **TPSS** | TRACTION POWER SUPPLY STATION |
| **TRANS** | TRANSITION, TRANSVERSE |
| **TS** | TRAFFIC SIGNAL, TUBULAR STEEL, TANGET TO SPIRAL |
| **TYP** | TYPICAL |
| **TOR** | TOP OF RAIL |

### U

| | |
|---|---|
| **UC** | UNDERCROSSING |
| **UD** | UNDERDRAIN |
| **UON** | UNLESS OTHERWISE NOTED |
| **UP** | UNDERPASS |
| **UPRR** | UNION PACIFIC RAILROAD |
| **USFWS** | UNITED STATES FISH AND WILDLIFE SERVICE |

### V

| | |
|---|---|
| **V** | VALVE, DESIGN SPEED |
| **VAR** | VARIABLE |
| **VC** | VERTICAL CURVE |
| **VCP** | VITRIFIED CLAY PIPE |
| **VERT** | VERTICAL |
| **VIA** | VIADUCT |
| **VOL** | VOLUME |

### W

| | |
|---|---|
| **W** | WEST, WIDTH |
| **WB** | WESTBOUND |
| **WH** | WEEP HOLE |
| **WM** | WIRE MESH |
| **WS** | WATER SURFACE |
| **WSP** | WELDED STEEL PIPE |
| **WT** | WEIGHT |
| **WV** | WATER VALVE |
| **WW** | WINGWALL |
| **WWLOL** | WINGWALL LAYOUT LINE |
| **W/** | WITH |

### X

| | |
|---|---|
| **X SEC** | CROSS SECTION |
| **XING** | CROSSING |

### Y

| | |
|---|---|
| **YR** | YEAR |
| **YRS** | YEARS |

## LEGEND

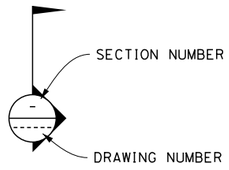


| | |
|---|---|
| —-E— | PROPOSED ELECTRICITY LINE |
| —-e— | EXISTING ELECTRICITY LINE |
| —-e—(oh)— | EXISTING OVERHEAD ELECTRICITY LINE |
| —-E—(OH)— | PROPOSED OVERHEAD ELECTRICTY LINE |
| ——— | PROPOSED HST RIGHT OF WAY |
| — — — — | PROPOSED HST TRACK CENTERLINE |
| | RETAINING WALL |
| | TOE OF SLOPE / TOP OF CUT |
| ---------- | PROPOSED TEMPORARY CONSTRUCTION EASEMENT |

CONTROL LINE EXAMPLE "A" LINE

255+00 260+00 265+00

OR — TRACK (PLAN AND ELEVATION)

REL — TRACK TO BE REMOVED AND RELOCATED PER BNSF

REMOVE BASE & SURFACING

SOUND BARRIER (POTENTIAL)

DIRECTION OF FLOW

WATER SURFACE

## GENERAL NOTES

1. TRACK PROFILE IS DESIGNED AS TOP OF THE LOW RAIL. VERTICAL CLEARANCE REQUIREMENTS ARE MEASURED FROM THE TOP OF THE HIGH RAIL ON SUPERELEVATED TRACK. THE CLEARANCE ENVELOPES SHOWN DEMONSTRATE THE MINIMUM CLEARANCE REQUIREMENTS.

2. MINIMUM VERTICAL CLEARANCE REQUIREMENTS TO CANALS AND DITCHES ARE NOT KNOWN. FURTHER CONSULTATION WITH THE WATERCOURSE OWNERS WILL BE REQUIRED TO DETERMINE NECESSARY CLEARANCES.

3. THE FOLLOWING ARE ROADWAY DESIGN STANDARDS AND GUIDELINES:
   A. CALTRANS HIGHWAY DESIGN MANUAL (2012)
   B. AASHTO A POLICY ON GEOMETRIC DESIGN OF HIGHWAYS AND STREETS (2011)
   C. AASHTO ROADSIDE DESIGN GUIDE (2011)
   D. APPLICABLE LOCAL DESIGN STANDARD AND GUIDELINES (I.E., CITY OF FRESNO)

4. THE FEMA FLOODPLAIN BOUNDARIES ARE CALLED OUT AS "LIMIT OF 100YR FEMA FLOODPLAIN". THE LIMITS OF THE MODELED 100 YEAR WATER SURFACE ELEVATIONS (WSE) ARE APPROXIMATE AND ARE MARKED WITH THE NAME OF THE WATERBODY ASSOCIATED WITH THE MODELED FLOODING, E.G. "LIMIT OF POSO CREEK FLOODPLAIN".

5. THE STRUCTURE DESIGN ASSUMES THAT THE DEPTH FROM TOR TO TOP OF DECK IS 2'-6" THROUGHOUT. HOWEVER, WHERE BALLASTED TRACK FORM IS USED, THE HEIGHT FROM TOR TO DECK SHALL BE 2'-9" PLUS AN ALLOWANCE FOR WATERPROOF MEMBRANE, AND PROTECTION LAYER IF REQUIRED. FOR SLAB TRACKFORM, THE HEIGHT FROM TOR TO DECK SHALL BE 2'-6" PLUS AN ALLOWANCE FOR WATERPROOF MEMBRANE AND PROTECTION LAYER IF REQUIRED.

6. WHERE THE VERTICAL ALIGNMENT GRADE IS LESS THAN 0.5% THE UPPER SURFACE OF THE VIADUCT STRUCTURE SHALL BE PROFILED TO GIVE A MINIMUM LONGITUDINAL FALL OF 0.5%. TYPICALLY FOR A SPAN OF 120'-00" ON A 0% GRADE SECTION OF VIADUCT THIS COULD BE ACHIEVED BY MODIFYING THE CROSS SLOPE OF THE GIRDER LINEARLY BETWEEN 0.8% AT MID-SPAN TO 2% AT EACH END.

7. WHEN LATERAL SEPARATION BETWEEN THE CONVENTIONAL RAILROAD AND HST SYSTEM IS LESS THAN 102', A SITE SPECIFIC HAZARD ANALYSIS WILL BE CONDUCTED TO DETERMINE WHAT SPECIFIC COLLISION PROTECTION MEASURES MAY NEED TO BE IMPLEMENTED.

8. RIP-RAP PROTECTION IS REQUIRED FOR EMBANKMENTS WITHIN FEMA SPECIAL FLOOD HAZARD ZONES, IN ACCORDANCE WITH DESIGN CRITERIA.

9. HST ALIGNMENT CONTROL LINE IS DESIGNED AS THE CENTERLINE BETWEEN THE TWO MAINLINE TRACKS.

10. TRACK FORM USED IN TYPICAL SECTIONS IS INDICATIVE.

DIRECTION OF TRAFFIC

POINT OF MINIMUM VERTICAL CLEARANCE
ROAD CLOSURE (ROADWAYS)

1 LINE DATA

(1) (3) CURVE DATA (ALIGNMENTS)
CURVE DATA (STRUCTURES)

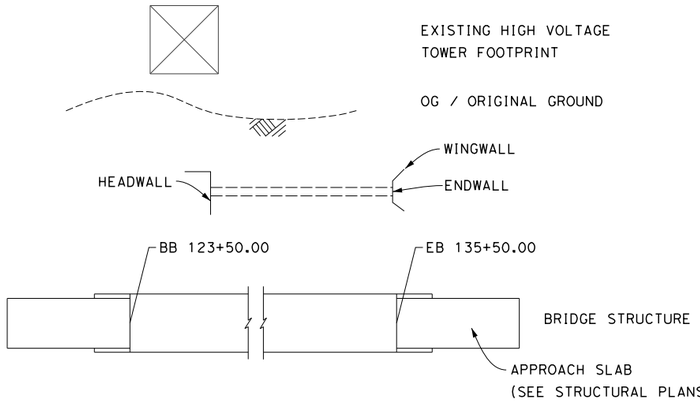


04/02/2014 - RFP No.: HSR 13-57

| REV | DATE | BY | CHK | APP | DESCRIPTION |
|---|---|---|---|---|---|

DESIGNED BY K. SEYMOUR
DRAWN BY P. TONKIN
CHECKED BY D. HUNT
IN CHARGE R. COFFIN
DATE 02/04/14

**RECORD SET 15% DESIGN SUBMISSION - NOT FOR CONSTRUCTION**

URS | HMM | ARUP
CALIFORNIA HIGH-SPEED TRAIN

CALIFORNIA HIGH-SPEED RAIL AUTHORITY

**CALIFORNIA HIGH-SPEED TRAIN PROJECT**
**FRESNO TO BAKERSFIELD**
GENERAL
ABBREVIATIONS AND LEGENDS
SHEET 2 OF 2

CONTRACT NO. HSR 06-0003
DRAWING NO. CB0011
SCALE NO SCALE
SHEET NO. 5 OF 8

paul.tonkin 1/28/2014 10:46:01 AM c:\pwworking\hmm\external\paul.tonkin01-arup.com\d0178202\FB-CB-0011.dgn

## ALIGNMENT F1

| CURVE No. | DESIGN SPEED (MPH) | RADIUS (R) (FT) | ACTUAL SUPERELEVATION EA (IN) | UNBALANCED SUPERELEVATION EU (IN) | SPIRAL LENGTH LS (FT) | CURVE LENGTH LC (FT) |
|---|---|---|---|---|---|---|
| ~~1~~ | ~~220~~ | ~~21296.75~~ | ~~6.75~~ | ~~2.34~~ | ~~3000/2500~~ | ~~12747~~ |

## ALIGNMENT M

| CURVE No. | DESIGN SPEED (MPH) | RADIUS (R) (FT) | ACTUAL SUPERELEVATION EA (IN) | UNBALANCED SUPERELEVATION EU (IN) | SPIRAL LENGTH LS (FT) | CURVE LENGTH LC (FT) |
|---|---|---|---|---|---|---|
| 2 | 250 | 70000 | 2.50 | 1.07 | 1200 | 1500 |
| 3 | 250 | 45000 | 3.75 | 1.81 | 1500 | 5364 |
| 4 | 250 | 45000 | 3.75 | 1.81 | 1500 | 3363 |
| 5 | 250 | 70000 | 2.50 | 1.07 | 1200 | 1486 |

## ALIGNMENT H

| CURVE No. | DESIGN SPEED (MPH) | RADIUS (R) (FT) | ACTUAL SUPERELEVATION EA (IN) | UNBALANCED SUPERELEVATION EU (IN) | SPIRAL LENGTH LS (FT) | CURVE LENGTH LC (FT) |
|---|---|---|---|---|---|---|
| 6 | 250 | 29000 | 5.75 | 2.87 | 2000 | 19086 |
| 7 | 250 | 36500 | 4.25 | 2.60 | 1700 | 37009 |

## ALIGNMENT HW

| CURVE No. | DESIGN SPEED (MPH) | RADIUS (R) (FT) | ACTUAL SUPERELEVATION EA (IN) | UNBALANCED SUPERELEVATION EU (IN) | SPIRAL LENGTH LS (FT) | CURVE LENGTH LC (FT) |
|---|---|---|---|---|---|---|
| ~~30~~ | ~~250~~ | ~~45000~~ | ~~3.75~~ | ~~1.81~~ | ~~1500~~ | ~~13026~~ |
| ~~31~~ | ~~250~~ | ~~20000.25~~ | ~~6.00~~ | ~~2.93~~ | ~~2500~~ | ~~4513~~ |

## ALIGNMENT HW2

| CURVE No. | DESIGN SPEED (MPH) | RADIUS (R) (FT) | ACTUAL SUPERELEVATION EA (IN) | UNBALANCED SUPERELEVATION EU (IN) | SPIRAL LENGTH LS (FT) | CURVE LENGTH LC (FT) |
|---|---|---|---|---|---|---|
| ~~130~~ | ~~250~~ | ~~45000~~ | ~~3.75~~ | ~~1.81~~ | ~~1500~~ | ~~13027~~ |
| ~~131~~ | ~~250~~ | ~~45000~~ | ~~3.75~~ | ~~1.81~~ | ~~1500~~ | ~~10443~~ |

## ALIGNMENT K1

| CURVE No. | DESIGN SPEED (MPH) | RADIUS (R) (FT) | ACTUAL SUPERELEVATION EA (IN) | UNBALANCED SUPERELEVATION EU (IN) | SPIRAL LENGTH LS (FT) | CURVE LENGTH LC (FT) |
|---|---|---|---|---|---|---|
| ~~32~~ | ~~250~~ | ~~20000~~ | ~~6.00~~ | ~~2.74~~ | ~~2500~~ | ~~4145~~ |
| ~~33~~ | ~~250~~ | ~~100000~~ | ~~1.50~~ | ~~1.00~~ | ~~1200~~ | ~~4694~~ |
| ~~34~~ | ~~250~~ | ~~85000~~ | ~~1.75~~ | ~~1.19~~ | ~~1200~~ | ~~1237~~ |
| ~~35~~ | ~~250~~ | ~~170000~~ | ~~1.00~~ | ~~0.47~~ | ~~1200~~ | ~~3692~~ |

## ALIGNMENT K2

| CURVE No. | DESIGN SPEED (MPH) | RADIUS (R) (FT) | ACTUAL SUPERELEVATION EA (IN) | UNBALANCED SUPERELEVATION EU (IN) | SPIRAL LENGTH LS (FT) | CURVE LENGTH LC (FT) |
|---|---|---|---|---|---|---|
| ~~36~~ | ~~220~~ | ~~22000.25~~ | ~~6.00~~ | ~~2.80~~ | ~~1800~~ | ~~8446~~ |
| ~~37~~ | ~~250~~ | ~~45000~~ | ~~3.75~~ | ~~1.81~~ | ~~1600~~ | ~~6233~~ |

## ALIGNMENT K3

| CURVE No. | DESIGN SPEED (MPH) | RADIUS (R) (FT) | ACTUAL SUPERELEVATION EA (IN) | UNBALANCED SUPERELEVATION EU (IN) | SPIRAL LENGTH LS (FT) | CURVE LENGTH LC (FT) |
|---|---|---|---|---|---|---|
| ~~40~~ | ~~250~~ | ~~28600~~ | ~~6.00~~ | ~~2.74~~ | ~~2500~~ | ~~9439~~ |
| ~~41~~ | ~~250~~ | ~~28600~~ | ~~6.00~~ | ~~2.74~~ | ~~2500~~ | ~~24733~~ |

## ALIGNMENT K4

| CURVE No. | DESIGN SPEED (MPH) | RADIUS (R) (FT) | ACTUAL SUPERELEVATION EA (IN) | UNBALANCED SUPERELEVATION EU (IN) | SPIRAL LENGTH LS (FT) | CURVE LENGTH LC (FT) |
|---|---|---|---|---|---|---|
| 8 | 250 | 30500 | 5.50 | 2.70 | 2300 | 9796 |
| 9 | 250 | 30500 | 5.50 | 2.70 | 2300 | 26096 |

## ALIGNMENT K5

| CURVE No. | DESIGN SPEED (MPH) | RADIUS (R) (FT) | ACTUAL SUPERELEVATION EA (IN) | UNBALANCED SUPERELEVATION EU (IN) | SPIRAL LENGTH LS (FT) | CURVE LENGTH LC (FT) |
|---|---|---|---|---|---|---|
| ~~133~~ | ~~250~~ | ~~100000~~ | ~~1.50~~ | ~~1.00~~ | ~~1200~~ | ~~26432~~ |
| ~~134~~ | ~~250~~ | ~~85000~~ | ~~1.75~~ | ~~1.19~~ | ~~1200~~ | ~~1237~~ |
| ~~135~~ | ~~250~~ | ~~170000~~ | ~~0.00~~ | ~~1.47~~ | ~~1200~~ | ~~3692~~ |

## ALIGNMENT K6

| CURVE No. | DESIGN SPEED (MPH) | RADIUS (R) (FT) | ACTUAL SUPERELEVATION EA (IN) | UNBALANCED SUPERELEVATION EU (IN) | SPIRAL LENGTH LS (FT) | CURVE LENGTH LC (FT) |
|---|---|---|---|---|---|---|
| ~~137~~ | ~~250~~ | ~~60000~~ | ~~2.75~~ | ~~1.42~~ | ~~1200~~ | ~~20392~~ |
| ~~138~~ | ~~250~~ | ~~60000~~ | ~~2.75~~ | ~~1.42~~ | ~~1200~~ | ~~3000~~ |

## ALIGNMENT C1

| CURVE No. | DESIGN SPEED (MPH) | RADIUS (R) (FT) | ACTUAL SUPERELEVATION EA (IN) | UNBALANCED SUPERELEVATION EU (IN) | SPIRAL LENGTH LS (FT) | CURVE LENGTH LC (FT) |
|---|---|---|---|---|---|---|
| ~~50~~ | ~~250~~ | ~~140000~~ | ~~0.75~~ | ~~1.04~~ | ~~1200~~ | ~~3007~~ |
| ~~51~~ | ~~250~~ | ~~66000~~ | ~~2.25~~ | ~~1.54~~ | ~~1200~~ | ~~1100~~ |
| ~~52~~ | ~~250~~ | ~~80000~~ | ~~2.00~~ | ~~1.13~~ | ~~900~~ | ~~2655~~ |
| ~~53~~ | ~~250~~ | ~~80000~~ | ~~2.00~~ | ~~1.13~~ | ~~900~~ | ~~2700~~ |

## ALIGNMENT C2

| CURVE No. | DESIGN SPEED (MPH) | RADIUS (R) (FT) | ACTUAL SUPERELEVATION EA (IN) | UNBALANCED SUPERELEVATION EU (IN) | SPIRAL LENGTH LS (FT) | CURVE LENGTH LC (FT) |
|---|---|---|---|---|---|---|
| 10 | 250 | 33000 | 5.00 | 2.58 | 2000 | 6870 |
| 11 | 250 | 32000 | 5.25 | 2.56 | 2100 | 15313 |
| 12 | 250 | 41000 | 4.00 | 2.10 | 1600 | 9735 |

## ALIGNMENT C3

| CURVE No. | DESIGN SPEED (MPH) | RADIUS (R) (FT) | ACTUAL SUPERELEVATION EA (IN) | UNBALANCED SUPERELEVATION EU (IN) | SPIRAL LENGTH LS (FT) | CURVE LENGTH LC (FT) |
|---|---|---|---|---|---|---|
| ~~60~~ | ~~250~~ | ~~315000~~ | ~~0.00~~ | ~~0.79~~ | ~~1200~~ | ~~1215~~ |
| ~~61~~ | ~~250~~ | ~~116500~~ | ~~1.00~~ | ~~1.15~~ | ~~900~~ | ~~1031~~ |
| ~~62~~ | ~~250~~ | ~~125000~~ | ~~1.00~~ | ~~1.00~~ | ~~900~~ | ~~1166~~ |

04/02/2014 - RFP No.: HSR 13-57

| REV | DATE | BY | CHK | APP | DESCRIPTION |
|---|---|---|---|---|---|

DESIGNED BY P. TONKIN
DRAWN BY P. TONKIN
CHECKED BY K. SEYMOUR
IN CHARGE R. COFFIN
DATE 02/04/14

**RECORD SET 15% DESIGN SUBMISSION - NOT FOR CONSTRUCTION**

URS | HMM | ARUP
CALIFORNIA HIGH-SPEED TRAIN

CALIFORNIA HIGH-SPEED RAIL AUTHORITY

**CALIFORNIA HIGH-SPEED TRAIN PROJECT**
**FRESNO TO BAKERSFIELD**
ALIGNMENT
CURVE DATA
SHEET 1 OF 2

CONTRACT NO. HSR 06-0003
DRAWING NO. CB0012
SCALE NO SCALE
SHEET NO. 6 OF 8

paul.tonkin 1/30/2014 4:44:59 PM c:\pwworking\hmm\external\paul.tonkin01-arup.com\d0178202\FB-CB-0012.dgn

## ALIGNMENT P

| CURVE No. | DESIGN SPEED (MPH) | RADIUS (R) (FT) | ACTUAL SUPERELEVATION EA (IN) | UNBALANCED SUPERELEVATION EU (IN) | SPIRAL LENGTH LS (FT) | CURVE LENGTH LC (FT) |
|---|---|---|---|---|---|---|
| 13 | 250 | 2000000 | 0.00 | 0.13 | 0 | 1999 |

## ALIGNMENT A1

| CURVE No. | DESIGN SPEED (MPH) | RADIUS (R) (FT) | ACTUAL SUPERELEVATION EA (IN) | UNBALANCED SUPERELEVATION EU (IN) | SPIRAL LENGTH LS (FT) | CURVE LENGTH LC (FT) |
|---|---|---|---|---|---|---|
| 14 | 250 | 50500 | 3.50 | 1.45 | 1400 | 21393 |
| ~~15~~ | ~~250~~ | ~~45000~~ | ~~3.75~~ | ~~1.81~~ | ~~1500~~ | ~~25440.03~~ |
| ~~16~~ | ~~250~~ | ~~45000~~ | ~~3.75~~ | ~~1.81~~ | ~~1500~~ | ~~20556/22710~~ |

## ALIGNMENT A2

| CURVE No. | DESIGN SPEED (MPH) | RADIUS (R) (FT) | ACTUAL SUPERELEVATION EA (IN) | UNBALANCED SUPERELEVATION EU (IN) | SPIRAL LENGTH LS (FT) | CURVE LENGTH LC (FT) |
|---|---|---|---|---|---|---|
| ~~70~~ | ~~250~~ | ~~45000~~ | ~~3.75~~ | ~~1.81~~ | ~~1500~~ | ~~10257.35~~ |
| ~~71~~ | ~~250~~ | ~~45000~~ | ~~3.75~~ | ~~1.81~~ | ~~1500~~ | ~~11168.36~~ |

## ALIGNMENT L1

| CURVE No. | DESIGN SPEED (MPH) | RADIUS (R) (FT) | ACTUAL SUPERELEVATION EA (IN) | UNBALANCED SUPERELEVATION EU (IN) | SPIRAL LENGTH LS (FT) | CURVE LENGTH LC (FT) |
|---|---|---|---|---|---|---|
| ~~16~~ | ~~250~~ | ~~45000~~ | ~~3.75~~ | ~~1.81~~ | ~~1500~~ | ~~29556~~ |

## ALIGNMENT L2

| CURVE No. | DESIGN SPEED (MPH) | RADIUS (R) (FT) | ACTUAL SUPERELEVATION EA (IN) | UNBALANCED SUPERELEVATION EU (IN) | SPIRAL LENGTH LS (FT) | CURVE LENGTH LC (FT) |
|---|---|---|---|---|---|---|
| ~~16~~ | ~~250~~ | ~~45000~~ | ~~3.75~~ | ~~1.81~~ | ~~1500~~ | ~~22710~~ |
| ~~92~~ | ~~250~~ | ~~45000~~ | ~~3.75~~ | ~~1.81~~ | ~~1500~~ | ~~15609~~ |

## ALIGNMENT L4

| CURVE No. | DESIGN SPEED (MPH) | RADIUS (R) (FT) | ACTUAL SUPERELEVATION EA (IN) | UNBALANCED SUPERELEVATION EU (IN) | SPIRAL LENGTH LS (FT) | CURVE LENGTH LC (FT) |
|---|---|---|---|---|---|---|
| ~~111~~ | ~~250~~ | ~~45000~~ | ~~3.75~~ | ~~1.81~~ | ~~1500~~ | ~~22536~~ |

## ALIGNMENT WS1

| CURVE No. | DESIGN SPEED (MPH) | RADIUS (R) (FT) | ACTUAL SUPERELEVATION EA (IN) | UNBALANCED SUPERELEVATION EU (IN) | SPIRAL LENGTH LS (FT) | CURVE LENGTH LC (FT) |
|---|---|---|---|---|---|---|
| ~~17~~ | ~~220~~ | ~~22000.25~~ | ~~6.50~~ | ~~2.30~~ | ~~2100~~ | ~~15300~~ |
| ~~18~~ | ~~250~~ | ~~640000~~ | ~~0.00~~ | ~~0.39~~ | ~~1200~~ | ~~4007~~ |
| ~~19~~ | ~~250~~ | ~~50000~~ | ~~2.75~~ | ~~2.25~~ | ~~1200~~ | ~~2221~~ |
| ~~20~~ | ~~250~~ | ~~60000~~ | ~~2.50~~ | ~~1.18~~ | ~~1200~~ | ~~4447~~ |
| ~~21~~ | ~~250~~ | ~~69000~~ | ~~2.50~~ | ~~1.12~~ | ~~1200~~ | ~~1216~~ |

## ALIGNMENT WS2

| CURVE No. | DESIGN SPEED (MPH) | RADIUS (R) (FT) | ACTUAL SUPERELEVATION EA (IN) | UNBALANCED SUPERELEVATION EU (IN) | SPIRAL LENGTH LS (FT) | CURVE LENGTH LC (FT) |
|---|---|---|---|---|---|---|
| ~~80~~ | ~~250~~ | ~~60000~~ | ~~3.00~~ | ~~1.17~~ | ~~1200~~ | ~~14392~~ |

## ALIGNMENT B1

| CURVE No. | DESIGN SPEED (MPH) | RADIUS (R) (FT) | ACTUAL SUPERELEVATION EA (IN) | UNBALANCED SUPERELEVATION EU (IN) | SPIRAL LENGTH LS (FT) | CURVE LENGTH LC (FT) |
|---|---|---|---|---|---|---|
| ~~22~~ | ~~250~~ | ~~60000~~ | ~~2.75~~ | ~~1.42~~ | ~~1200~~ | ~~1200~~ |
| ~~23~~ | ~~220~~ | ~~19500.25~~ | ~~7.00~~ | ~~2.92~~ | ~~1714~~ | ~~17153~~ |
| ~~24~~ | ~~220~~ | ~~19500.25~~ | ~~7.00~~ | ~~2.92~~ | ~~1714~~ | ~~2676~~ |
| ~~25~~ | ~~220~~ | ~~30000.25~~ | ~~3.50~~ | ~~2.35~~ | ~~956~~ | ~~1291~~ |
| ~~26~~ | ~~220~~ | ~~20000.34~~ | ~~7.00~~ | ~~2.60~~ | ~~1720~~ | ~~5340~~ |

## ALIGNMENT B2

| CURVE No. | DESIGN SPEED (MPH) | RADIUS (R) (FT) | ACTUAL SUPERELEVATION EA (IN) | UNBALANCED SUPERELEVATION EU (IN) | SPIRAL LENGTH LS (FT) | CURVE LENGTH LC (FT) |
|---|---|---|---|---|---|---|
| ~~100~~ | ~~250~~ | ~~60000~~ | ~~2.75~~ | ~~1.42~~ | ~~1200~~ | ~~1200~~ |
| ~~101~~ | ~~220~~ | ~~19500.25~~ | ~~7.00~~ | ~~2.92~~ | ~~1700~~ | ~~17086.93~~ |
| ~~102~~ | ~~220~~ | ~~19600~~ | ~~7.00~~ | ~~2.84~~ | ~~1692.55~~ | ~~2375~~ |
| ~~103~~ | ~~220~~ | ~~23500~~ | ~~5.50~~ | ~~2.74~~ | ~~1331.22~~ | ~~1432.82~~ |
| ~~104~~ | ~~220~~ | ~~33000~~ | ~~3.50~~ | ~~2.37~~ | ~~1050~~ | ~~2770.34~~ |
| ~~105~~ | ~~220~~ | ~~20000~~ | ~~7.00~~ | ~~2.60~~ | ~~1720.24~~ | ~~4097.46~~ |

## ALIGNMENT B3

| CURVE No. | DESIGN SPEED (MPH) | RADIUS (R) (FT) | ACTUAL SUPERELEVATION EA (IN) | UNBALANCED SUPERELEVATION EU (IN) | SPIRAL LENGTH LS (FT) | CURVE LENGTH LC (FT) |
|---|---|---|---|---|---|---|
| ~~120~~ | ~~250~~ | ~~60000~~ | ~~2.75~~ | ~~1.42~~ | ~~1200~~ | ~~1200~~ |
| ~~121~~ | ~~220~~ | ~~19500.25~~ | ~~7.00~~ | ~~2.92~~ | ~~1700~~ | ~~17087~~ |
| ~~122~~ | ~~220~~ | ~~19600~~ | ~~7.00~~ | ~~2.84~~ | ~~1700~~ | ~~2375~~ |
| ~~123~~ | ~~130~~ | ~~10100.25~~ | ~~3.75~~ | ~~2.94~~ | ~~640~~ | ~~1245~~ |
| ~~124~~ | ~~125~~ | ~~8100.25~~ | ~~4.75~~ | ~~2.96~~ | ~~700~~ | ~~1096~~ |
| ~~125~~ | ~~145~~ | ~~9500~~ | ~~6.00~~ | ~~2.85~~ | ~~1300~~ | ~~2842~~ |

## STANDARD STATION TRACK RETURN CURVE

| DESIGN SPEED (MPH) | TOTAL LENGTH ALONG MAIN TRACK | RADIUS (R) (FT) | ACTUAL SUPERELEVATION EA (IN) | UNBALANCED SUPERELEVATION EU (IN) | SPIRAL LENGTH LS (FT) | CURVE LENGTH LC (FT) |
|---|---|---|---|---|---|---|
| 110 | 1364.60 | 13500 | 1.25 | 2.34 | 160 | 320.21 |

## B3 STATION TRACKS RETURN CURVE

| DESIGN SPEED (MPH) | TOTAL LENGTH ALONG MAIN TRACK | RADIUS (R) (FT) | ACTUAL SUPERELEVATION EA (IN) | UNBALANCED SUPERELEVATION EU (IN) | SPIRAL LENGTH LS (FT) | CURVE LENGTH LC (FT) |
|---|---|---|---|---|---|---|
| ~~80~~ | ~~991.00~~ | ~~7000~~ | ~~1.25~~ | ~~2.41~~ | ~~120~~ | ~~222.24~~ |

04/02/2014 - RFP No.: HSR 13-57

1/30/2014 6:53:47 PM c:\pwworking\hmm\external\paul.tonkin01-arup.com\d0178202\FB-CB-0013.dgn paul.tonkin

| REV | DATE | BY | CHK | APP | DESCRIPTION |
|---|---|---|---|---|---|

DESIGNED BY P. TONKIN
DRAWN BY P. TONKIN
CHECKED BY K. SEYMOUR
IN CHARGE R. COFFIN
DATE 02/04/14

**RECORD SET 15% DESIGN SUBMISSION - NOT FOR CONSTRUCTION**

URS | HMM | ARUP
CALIFORNIA HIGH-SPEED TRAIN

CALIFORNIA
HIGH-SPEED RAIL AUTHORITY

**CALIFORNIA HIGH-SPEED TRAIN PROJECT**
**FRESNO TO BAKERSFIELD**
ALIGNMENT
CURVE DATA
SHEET 2 OF 2

CONTRACT NO. HSR 06-0003
DRAWING NO. CB0013
SCALE NO SCALE
SHEET NO. 7 OF 8

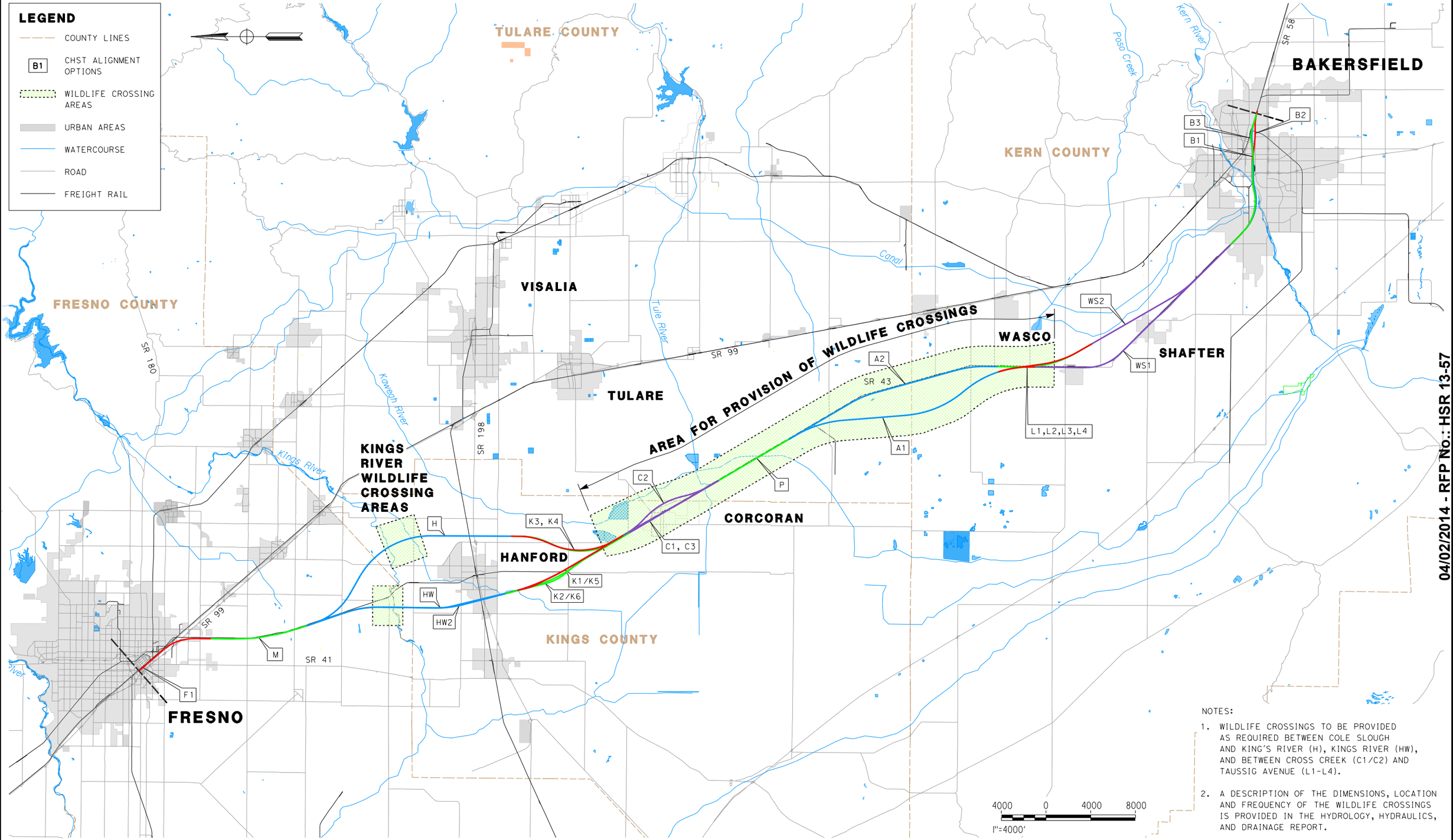


NOTES:

1. WILDLIFE CROSSINGS TO BE PROVIDED AS REQUIRED BETWEEN COLE SLOUGH AND KING'S RIVER (H), KINGS RIVER (HW), AND BETWEEN CROSS CREEK (C1/C2) AND TAUSSIG AVENUE (L1-L4).
2. A DESCRIPTION OF THE DIMENSIONS, LOCATION AND FREQUENCY OF THE WILDLIFE CROSSINGS IS PROVIDED IN THE HYDROLOGY, HYDRAULICS, AND DRAINAGE REPORT.

04/02/2014 - RFP No.: HSR 13-57

| REV | DATE | BY | CHK | APP | DESCRIPTION |
|---|---|---|---|---|---|

DESIGNED BY K. SEYMOUR
DRAWN BY P. TONKIN
CHECKED BY D. HUNT
IN CHARGE R. COFFIN
DATE 02/04/14

RECORD SET 15% DESIGN SUBMISSION - NOT FOR CONSTRUCTION

URS | HMM | ARUP
CALIFORNIA HIGH-SPEED TRAIN

CALIFORNIA HIGH-SPEED RAIL AUTHORITY

# CALIFORNIA HIGH-SPEED TRAIN PROJECT FRESNO TO BAKERSFIELD

WILDLIFE CROSSINGS LOCATION MAP

CONTRACT NO. HSR 06-0003
DRAWING NO. CB0016
SCALE AS SHOWN
SHEET NO. 8 OF 8

1/27/2014 11:58:23 AM c:\pwworking\hmm\external\paul.tonkin01-arup.com\d0178202\VFB-CB-0016.dgn
paul.tonkin

| REV | DATE | BY | CHK | APP | DESCRIPTION |
|---|---|---|---|---|---|
| | | | | | |

DESIGNED BY A. POLING
DRAWN BY P. TONKIN
CHECKED BY K. SEYMOUR
IN CHARGE R. COFFIN
DATE 02/04/14

**RECORD SET 15% DESIGN SUBMISSION - NOT FOR CONSTRUCTION**

URS | HMM | ARUP
CALIFORNIA HIGH-SPEED TRAIN

CALIFORNIA
HIGH-SPEED RAIL AUTHORITY

# CALIFORNIA HIGH-SPEED TRAIN PROJECT
## FRESNO TO BAKERSFIELD
FRESNO SUBSECTION
ALIGNMENT F1
STA. 257+24 TO 627+07
KEY MAP

CONTRACT NO. HSR 06-0003
DRAWING NO. CB1650
SCALE AS SHOWN
SHEET NO. 1 OF 24

04/02/2014 - RFP No.: HSR 13-57

Paul.Tonkin 1/27/2014 4:43:01 PM c:\pwworking\hmm\external\paul.tonkin01-arup.com\d0178585\FB-CB-1650-F1.dgn

PLAN

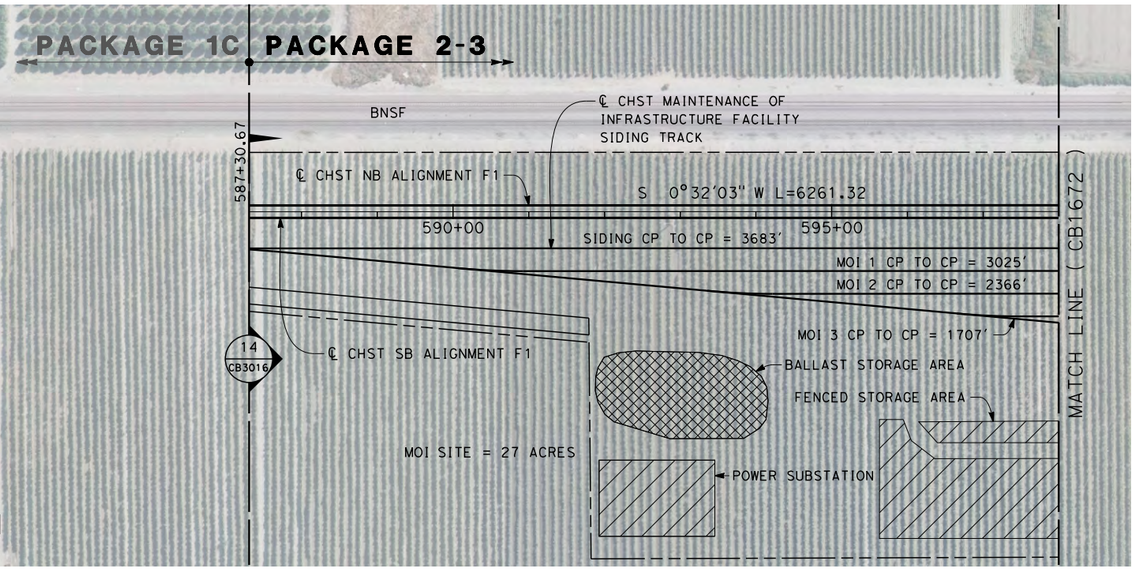


PROFILE

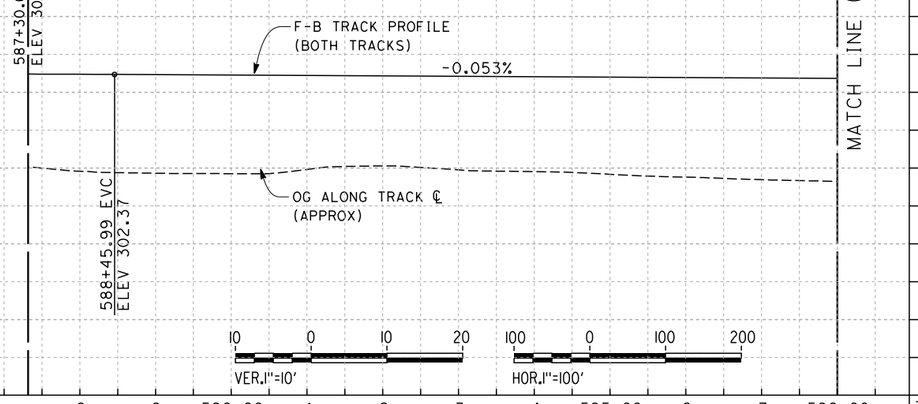


350 340 330 320 310 300 290 280 270 260

| STATION | | 8 | 9 | 590+00 | 1 | 2 | 3 | 4 | 595+00 | 6 | 7 | 598+00 | TOTAL |
|---|---|---|---|---|---|---|---|---|---|---|---|---|---|
| CY | Exc | | | | | | | | | | | | |
| | Emb | | | | | | | | | | | | |

| REV | DATE | BY | CHK | APP | DESCRIPTION |
|---|---|---|---|---|---|

DESIGNED BY A. POLING
DRAWN BY P. TONKIN
CHECKED BY K. SEYMOUR
IN CHARGE R. COFFIN
DATE 02/04/14

**RECORD SET 15% DESIGN SUBMISSION - NOT FOR CONSTRUCTION**

URS | HMM | ARUP
CALIFORNIA HIGH-SPEED TRAIN

CALIFORNIA HIGH-SPEED RAIL AUTHORITY

# CALIFORNIA HIGH-SPEED TRAIN PROJECT
# FRESNO TO BAKERSFIELD

FRESNO SUBSECTION
ALIGNMENT F1
STA. 569+00 TO 598+00
PLAN AND PROFILE

CONTRACT NO. HSR 06-0003
DRAWING NO. CB1671
SCALE AS SHOWN
SHEET NO. 16 OF 24

04/02/2014 - RFP NO.: HSR 13-57

2/7/2014 5:06:44 PM c:\pwworking\hmm\external\paul.tonkin01-arup.com\d0178585\FB-CB-1671-F1.dgn paul.tonkin

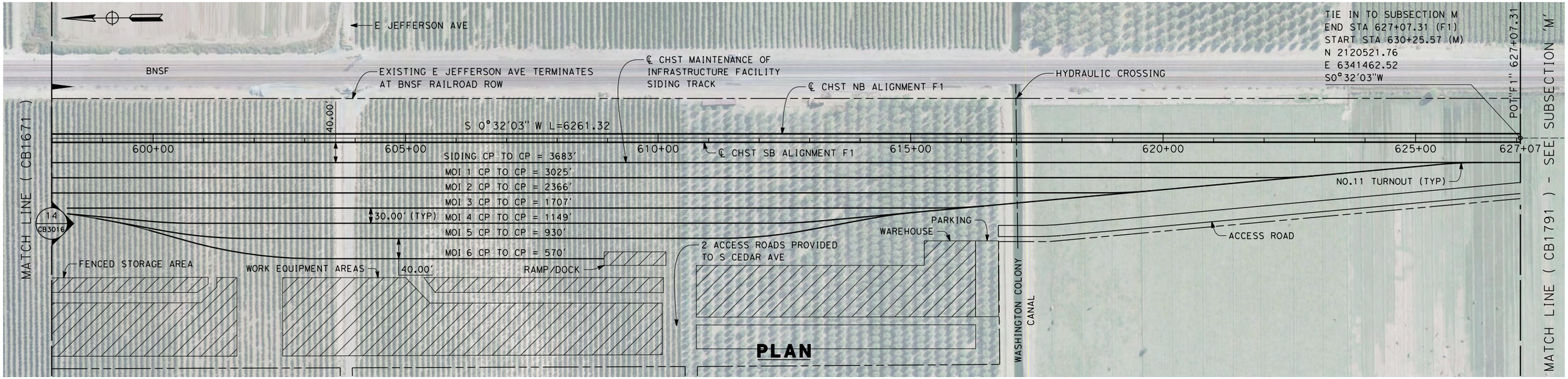


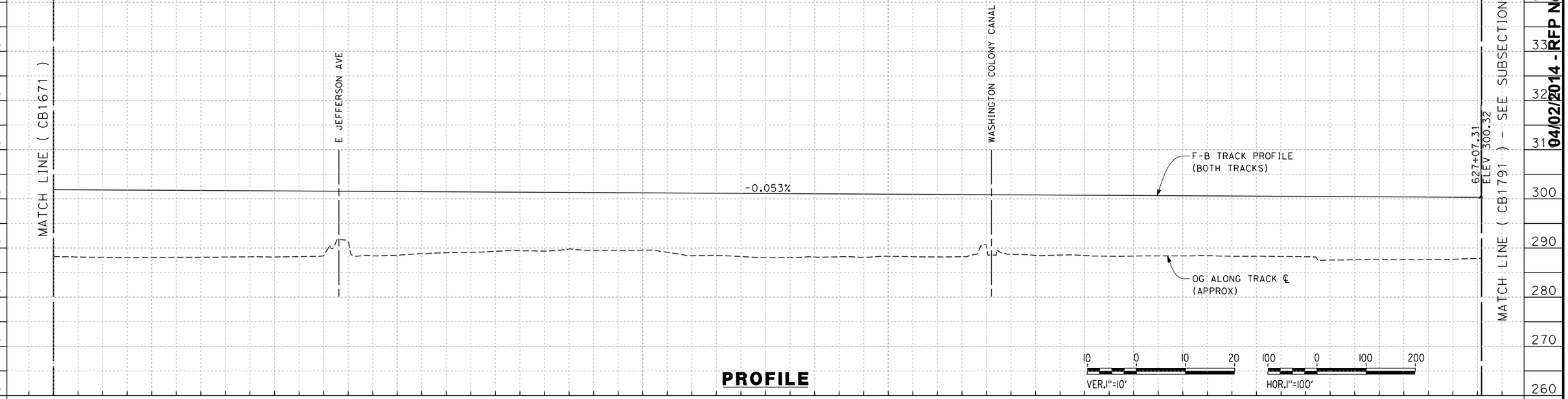


| REV | DATE | BY | CHK | APP | DESCRIPTION |
|---|---|---|---|---|---|
| | | | | | |

DESIGNED BY A. POLING
DRAWN BY P. TONKIN
CHECKED BY K. SEYMOUR
IN CHARGE R. COFFIN
DATE 12/31/13

**RECORD SET 15% DESIGN SUBMISSION - NOT FOR CONSTRUCTION**

URS | HMM | ARUP
California High-Speed Train

CALIFORNIA HIGH-SPEED RAIL AUTHORITY

# CALIFORNIA HIGH-SPEED TRAIN PROJECT
## FRESNO TO BAKERSFIELD
FRESNO SUBSECTION
ALIGNMENT F1
STA. 598+00 TO 627+07
PLAN AND PROFILE

CONTRACT NO. HSR 06-0003
DRAWING NO. CB1672
SCALE AS SHOWN
SHEET NO. 17 OF 24

04/02/2014 - RFP NO.: HSR 13-57

12/12/2013 6:26:43 PM c:\pwworking\hmm\external\paul.tonkin01-arup.com\d0125323\FB-CB-1672-F1.dgn
paul.tonkin

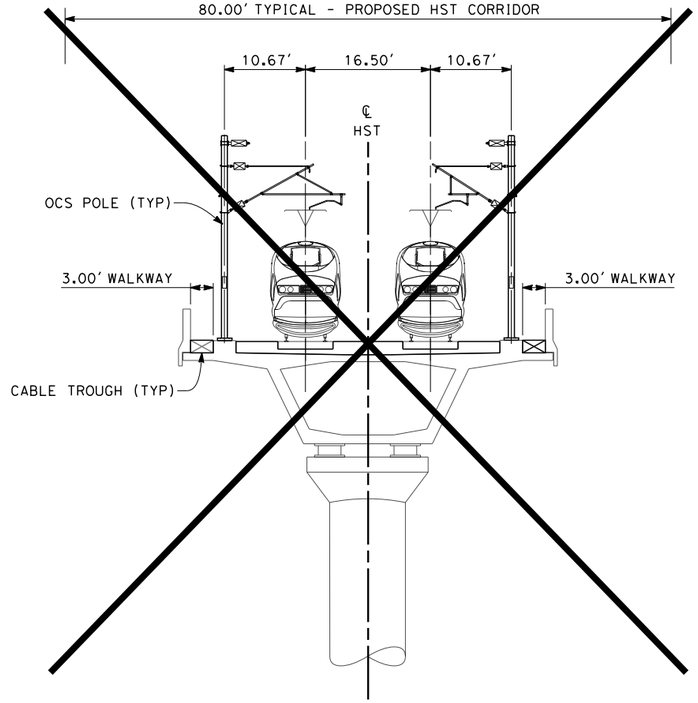


## SECTION 13

TWIN TRACK - AERIAL VIADUCT
STA 442+62 THROUGH STA 478+75
STA 487+26 THROUGH STA 503+30

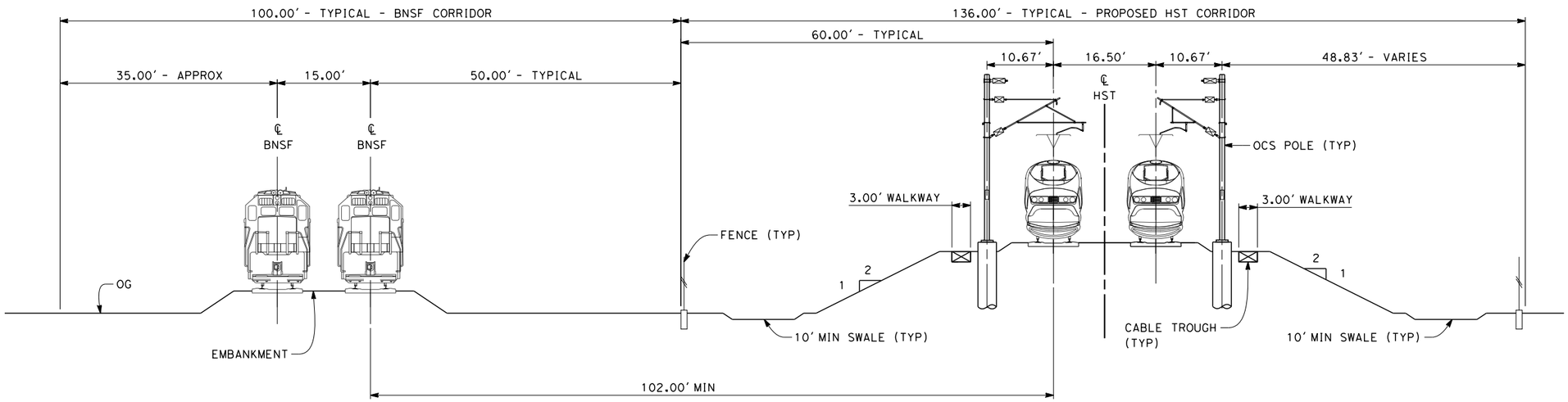


## SECTION 14

TWIN TRACK ADJACENT TO SINGLE TRACK BNSF
STA 544+35 THROUGH STA 627+07

NOTES:

1. TRACKFORM SHOWN IS INDICATIVE.
2. FOR STRUCTURE DIMENSIONS SEE STRUCTURAL CROSS SECTIONS.
3. SUPERELEVATION IS NOT SHOWN. THE AMOUNT OF APPLIED SUPERELEVATION IS SHOWN IN THE CURVE DATA TABLES.

10 0 10 20
1"=10'

| REV | DATE | BY | CHK | APP | DESCRIPTION |
|---|---|---|---|---|---|

DESIGNED BY A. POLING
DRAWN BY P. TONKIN
CHECKED BY K. SEYMOUR
IN CHARGE R. COFFIN
DATE 02/04/14

**RECORD SET 15% DESIGN SUBMISSION - NOT FOR CONSTRUCTION**

URS | HMM | ARUP
CALIFORNIA HIGH-SPEED TRAIN

CALIFORNIA HIGH-SPEED RAIL AUTHORITY

# CALIFORNIA HIGH-SPEED TRAIN PROJECT FRESNO TO BAKERSFIELD

FRESNO SUBSECTION
ALIGNMENT F1
TYPICAL SECTIONS

CONTRACT NO. HSR 06-0003
DRAWING NO. CB3016
SCALE AS SHOWN
SHEET NO. 24 OF 24

04/02/2014 - RFP No.: HSR 13-57

paul.tonkin 1/28/2014 9:50:22 AM c:\pwworking\hmm\external\paul.tonkin01-arup.com\d0178585\VFB-CB-3016-F1.dgn

04/02/2014 - RFP No.: HSR 13-57

| REV | DATE | BY | CHK | APP | DESCRIPTION |
|---|---|---|---|---|---|

DESIGNED BY S. LITSAS
DRAWN BY P. TONKIN
CHECKED BY K. SEYMOUR
IN CHARGE R. COFFIN
DATE 12/31/13

**RECORD SET 15% DESIGN SUBMISSION - NOT FOR CONSTRUCTION**

URS | HMM | ARUP
CALIFORNIA HIGH-SPEED TRAIN

CALIFORNIA HIGH-SPEED RAIL AUTHORITY

# CALIFORNIA HIGH-SPEED TRAIN PROJECT
# FRESNO TO BAKERSFIELD

MONMOUTH SUBSECTION
ALIGNMENT M
STA. 630+26 TO 1065+07
KEY MAP

CONTRACT NO. HSR 06-0003
DRAWING NO. CB1790
SCALE AS SHOWN
SHEET NO. 1 OF 11

12/12/2013 10:36:32 AM c:\pwworking\hmm\external\paul.tonkin01-arup.com\d0125159\FB-CB-1790-M.dgn
paul.tonkin

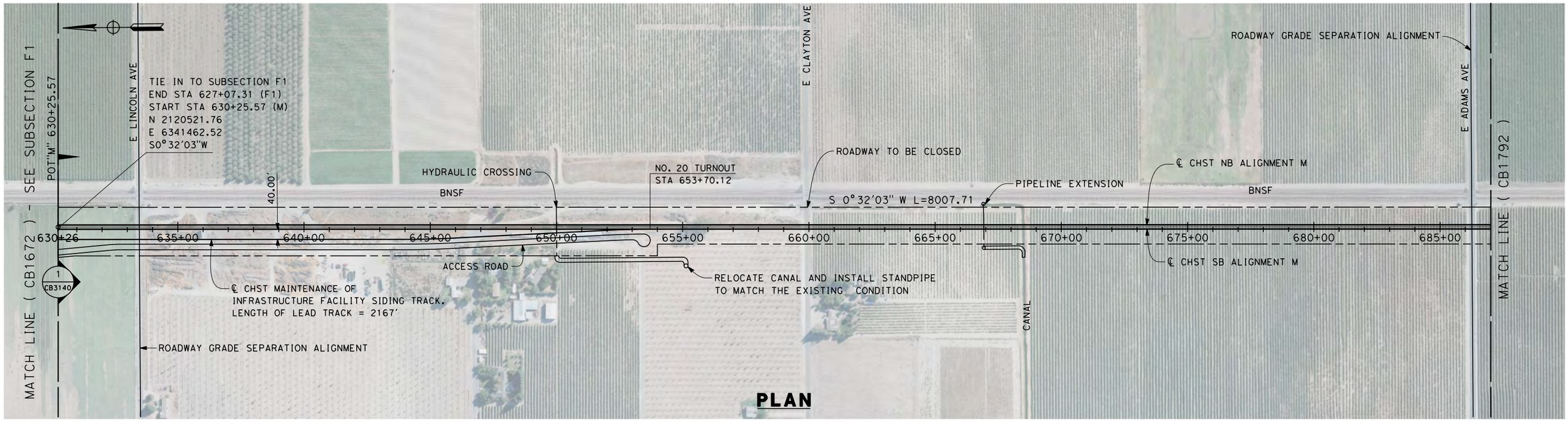


**PLAN**

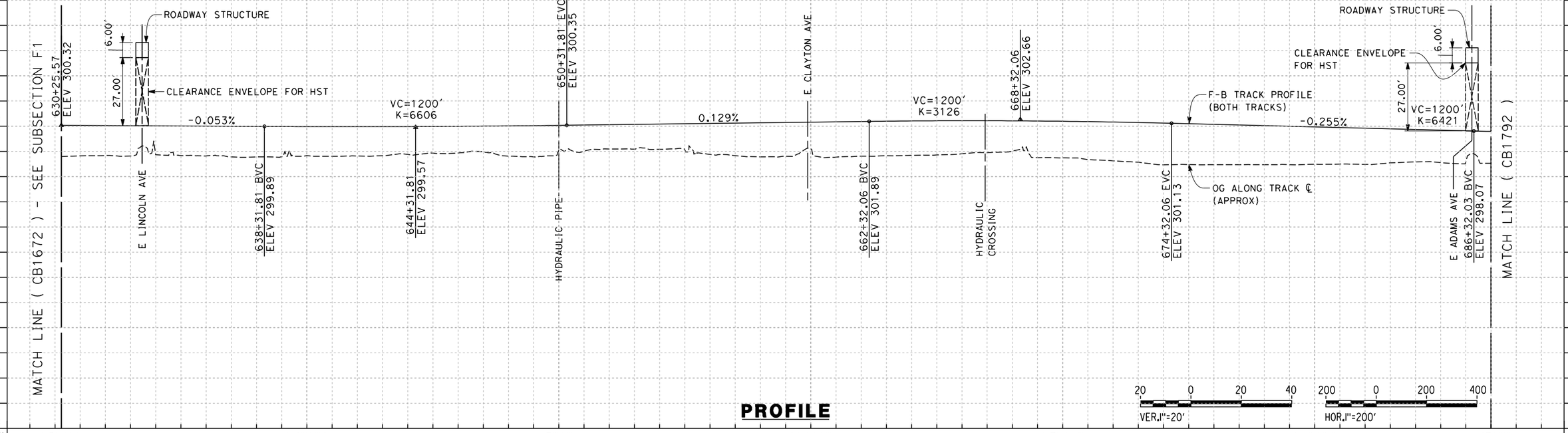


**PROFILE**

| STATION | 630+26 | 640+00 | 650+00 | 660+00 | 670+00 | 680+00 | 687+00 | TOTAL |
|---|---|---|---|---|---|---|---|---|
| CY Exc | | | | | | | | |
| CY Emb | | | | | | | | |

| REV | DATE | BY | CHK | APP | DESCRIPTION |
|---|---|---|---|---|---|

DESIGNED BY S. LITSAS
DRAWN BY P. TONKIN
CHECKED BY K. SEYMOUR
IN CHARGE R. COFFIN
DATE 12/31/13

**RECORD SET 15% DESIGN SUBMISSION - NOT FOR CONSTRUCTION**

URS | HMM | ARUP
CALIFORNIA HIGH-SPEED TRAIN

CALIFORNIA HIGH-SPEED RAIL AUTHORITY

# CALIFORNIA HIGH-SPEED TRAIN PROJECT
# FRESNO TO BAKERSFIELD
MONMOUTH SUBSECTION
ALIGNMENT M
STA. 630+26 TO 687+00
PLAN AND PROFILE

CONTRACT NO. HSR 06-0003
DRAWING NO. CB1791
SCALE AS SHOWN
SHEET NO. 2 OF 11

04/02/2014 - RFP No.: HSR 13-57

12/12/2013 3:09:10 PM c:\pwworking\hmm\external\paul.tonkin01-arup.com\d0125159\FB-CB-1791-M.dgn paul.tonkin

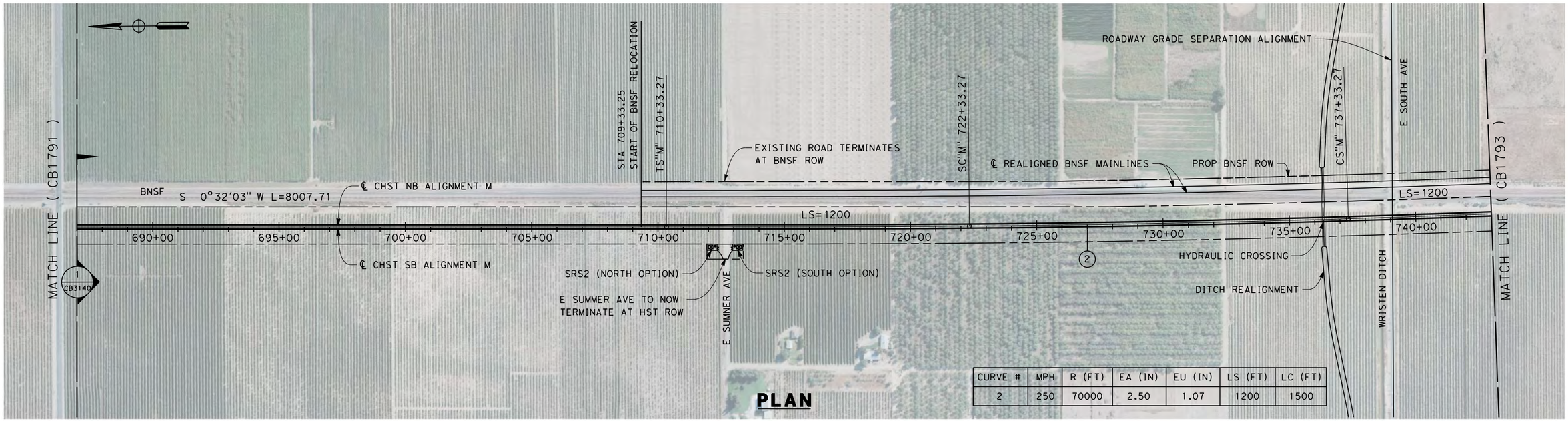


**PLAN**

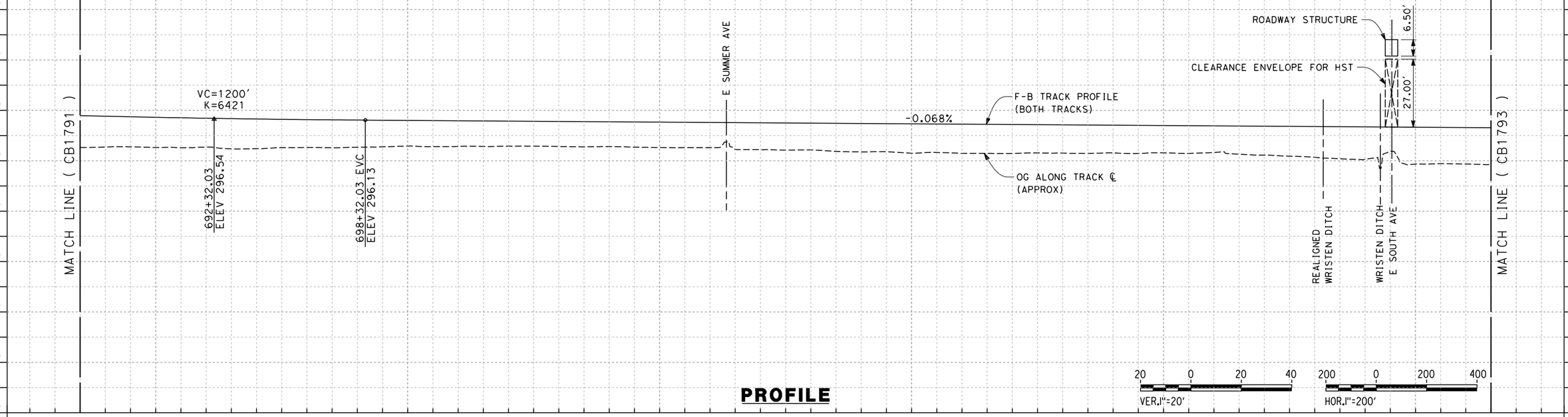


**PROFILE**

| REV | DATE | BY | CHK | APP | DESCRIPTION |
|---|---|---|---|---|---|

DESIGNED BY S. LITSAS
DRAWN BY P. TONKIN
CHECKED BY K. SEYMOUR
IN CHARGE R. COFFIN
DATE 12/31/13

**RECORD SET 15% DESIGN SUBMISSION - NOT FOR CONSTRUCTION**

URS | HMM | ARUP
CALIFORNIA HIGH-SPEED TRAIN

CALIFORNIA HIGH-SPEED RAIL AUTHORITY

# CALIFORNIA HIGH-SPEED TRAIN PROJECT
# FRESNO TO BAKERSFIELD

MONMOUTH SUBSECTION
ALIGNMENT M
STA. 687+00 TO 743+00
PLAN AND PROFILE

CONTRACT NO. HSR 06-0003
DRAWING NO. CB1792
SCALE AS SHOWN
SHEET NO. 3 OF 11

04/02/2014 - RFP No.: HSR 13-57

12/12/2013 3:10:16 PM c:\pwworking\hmm\external\paul.tonkin01-arup.com\d0125159\FB-CB-1792-M.dgn paul.tonkin

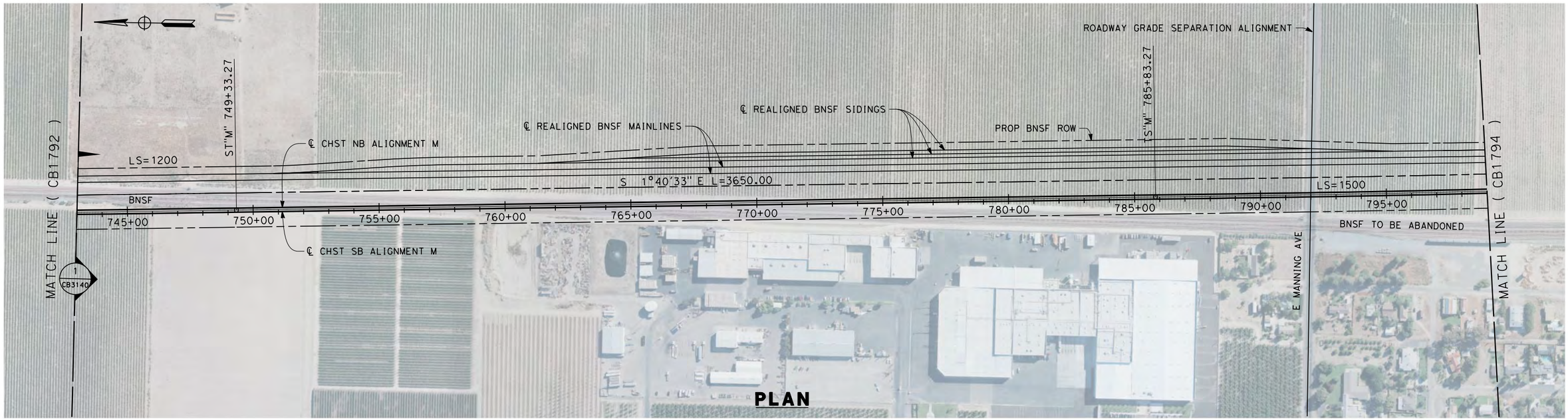


**PLAN**

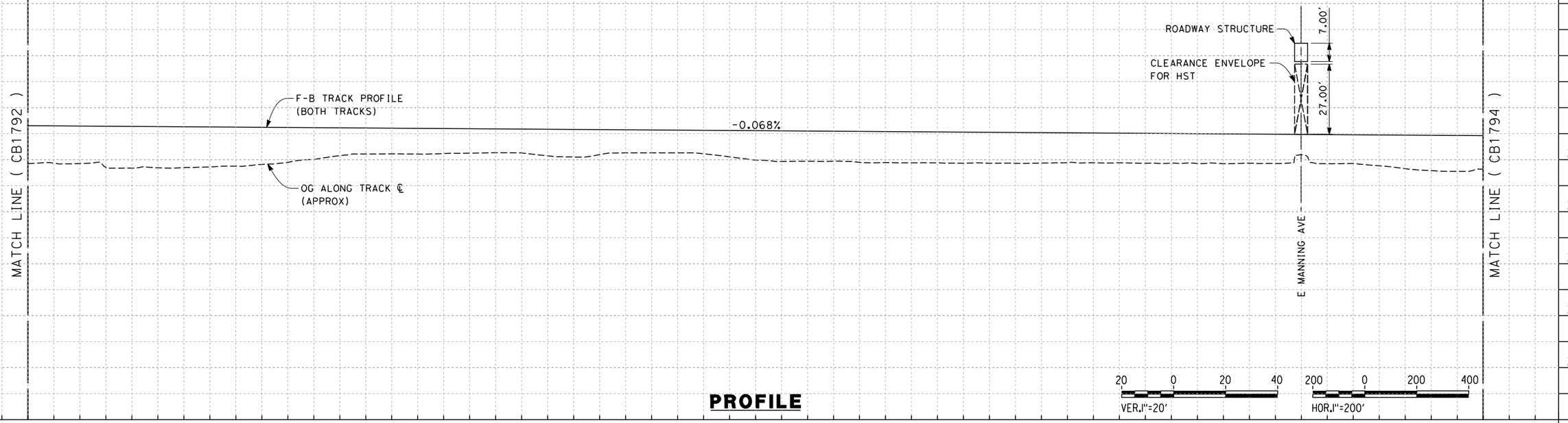


**PROFILE**

| REV | DATE | BY | CHK | APP | DESCRIPTION |
|---|---|---|---|---|---|
| | | | | | |

DESIGNED BY S. LITSAS
DRAWN BY P. TONKIN
CHECKED BY K. SEYMOUR
IN CHARGE R. COFFIN
DATE 12/31/13

**RECORD SET 15% DESIGN SUBMISSION - NOT FOR CONSTRUCTION**

URS | HMM | ARUP
CALIFORNIA HIGH-SPEED TRAIN

CALIFORNIA HIGH-SPEED RAIL AUTHORITY

# CALIFORNIA HIGH-SPEED TRAIN PROJECT
## FRESNO TO BAKERSFIELD
MONMOUTH SUBSECTION
ALIGNMENT M
STA. 743+00 TO 799+00
PLAN AND PROFILE

CONTRACT NO. HSR 06-0003
DRAWING NO. CB1793
SCALE AS SHOWN
SHEET NO. 4 OF 11

04/02/2014 - RFP No.: HSR 13-57

12/12/2013 3:11:17 PM c:\pwworking\hmm\external\paul.tonkin01-arup.com\d0125159\VFB-CB-1793-M.dgn paul.tonkin

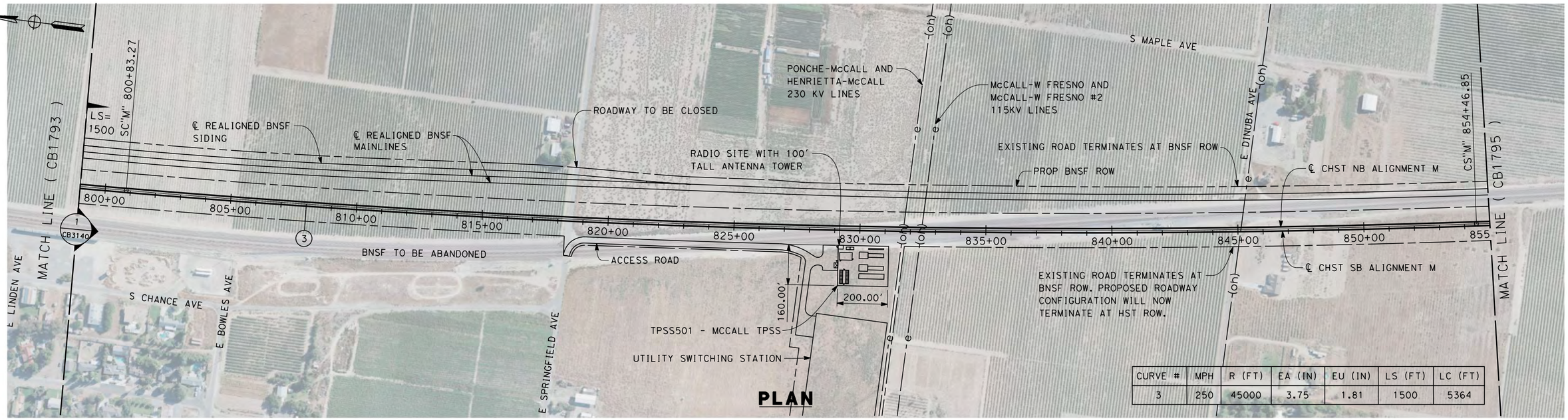


| CURVE # | MPH | R (FT) | EA (IN) | EU (IN) | LS (FT) | LC (FT) |
|---|---|---|---|---|---|---|
| 3 | 250 | 45000 | 3.75 | 1.81 | 1500 | 5364 |

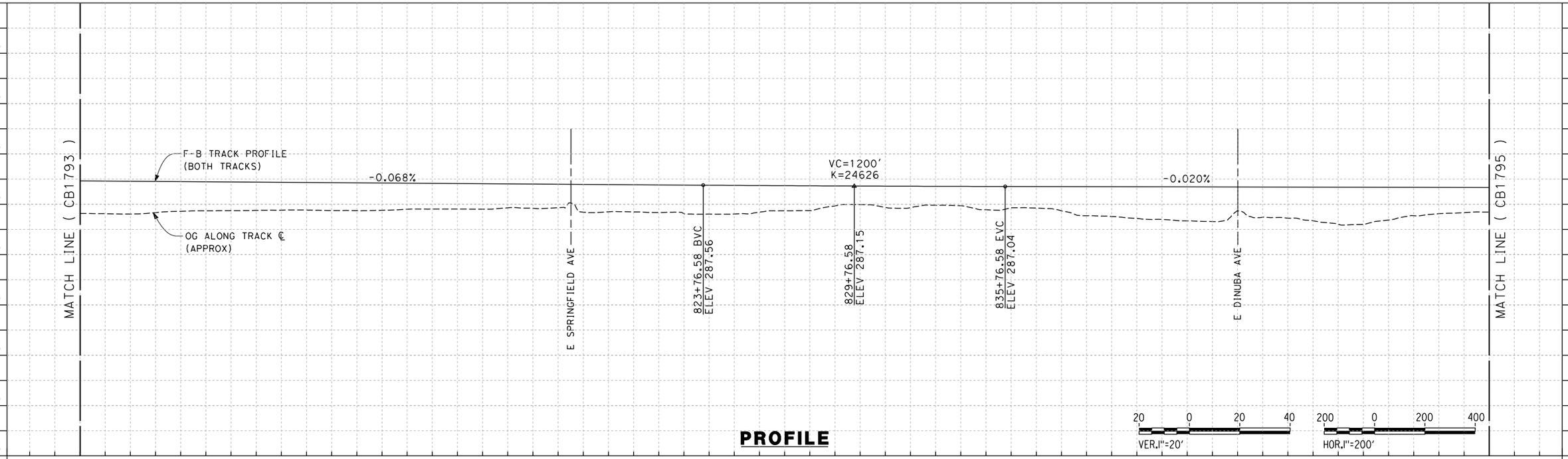


| STATION | 799+00 | 810+00 | 820+00 | 830+00 | 840+00 | 850+00 | 855+00 | TOTAL |
|---|---|---|---|---|---|---|---|---|
| CY Exc | | | | | | | | |
| CY Emb | | | | | | | | |

| REV | DATE | BY | CHK | APP | DESCRIPTION |
|---|---|---|---|---|---|

DESIGNED BY S. LITSAS
DRAWN BY P. TONKIN
CHECKED BY K. SEYMOUR
IN CHARGE R. COFFIN
DATE 12/31/13

**RECORD SET 15% DESIGN SUBMISSION - NOT FOR CONSTRUCTION**

URS | HMM | ARUP
CALIFORNIA HIGH-SPEED TRAIN

CALIFORNIA HIGH-SPEED RAIL AUTHORITY

# CALIFORNIA HIGH-SPEED TRAIN PROJECT
## FRESNO TO BAKERSFIELD
MONMOUTH SUBSECTION
ALIGNMENT M
STA. 799+00 TO 855+00
PLAN AND PROFILE

CONTRACT NO. HSR 06-0003
DRAWING NO. CB1794
SCALE AS SHOWN
SHEET NO. 5 OF 11

04/02/2014 - RFP No.: HSR 13-57

12/12/2013 2:35:48 PM c:\pwworking\hmm\external\paul.tonkin01-arup.com\d0125159\FB-CB-1794-M.dgn paul.tonkin

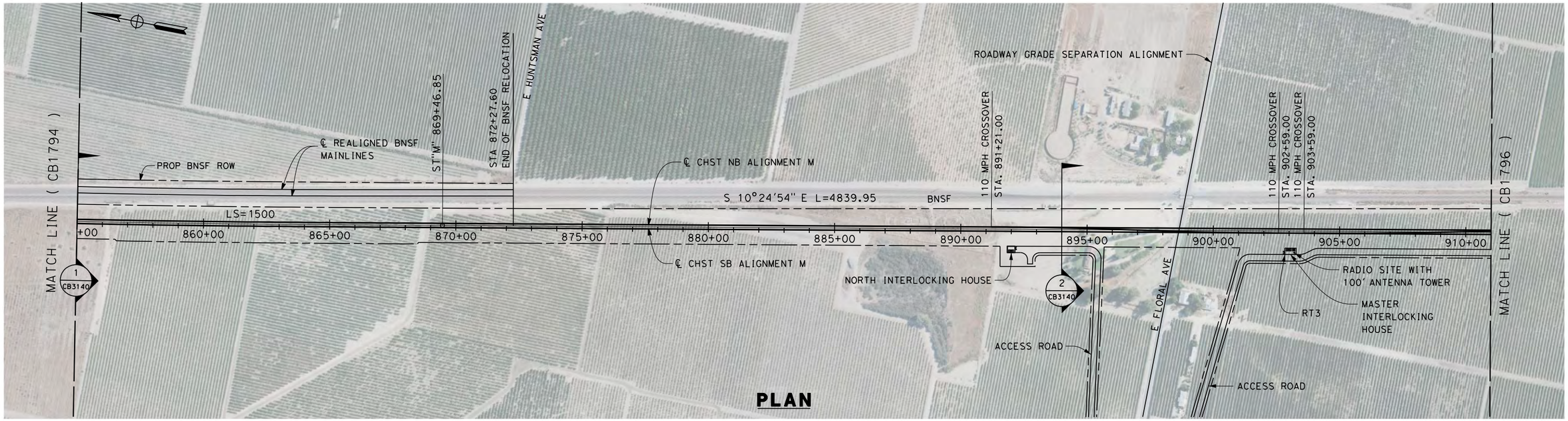


**PLAN**

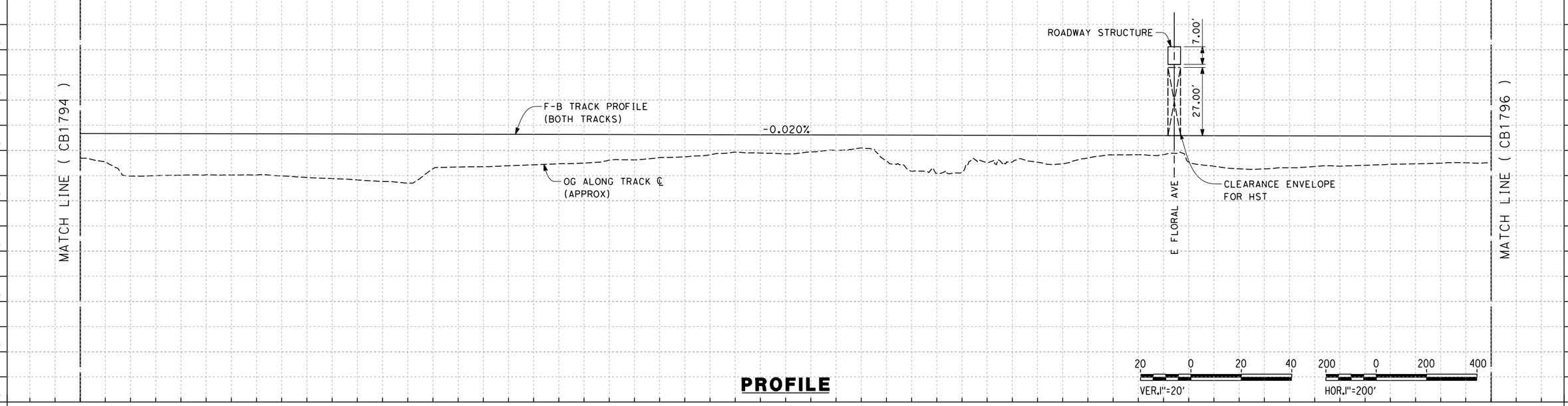


**PROFILE**

| REV | DATE | BY | CHK | APP | DESCRIPTION |
|---|---|---|---|---|---|

DESIGNED BY S. LITSAS
DRAWN BY P. TONKIN
CHECKED BY K. SEYMOUR
IN CHARGE R. COFFIN
DATE 12/31/13

**RECORD SET 15% DESIGN SUBMISSION - NOT FOR CONSTRUCTION**

URS | HMM | ARUP
CALIFORNIA HIGH-SPEED TRAIN

CALIFORNIA HIGH-SPEED RAIL AUTHORITY

# CALIFORNIA HIGH-SPEED TRAIN PROJECT
# FRESNO TO BAKERSFIELD

MONMOUTH SUBSECTION
ALIGNMENT M
STA. 855+00 TO 911+00
PLAN AND PROFILE

CONTRACT NO. HSR 06-0003
DRAWING NO. CB1795
SCALE AS SHOWN
SHEET NO. 6 OF 11

04/02/2014 - RFP No.: HSR 13-57

12/12/2013 3:14:03 PM c:\pwworking\hmm\external\paul.tonkin01-arup.com\d0125159\FB-CB-1795-M.dgn paul.tonkin

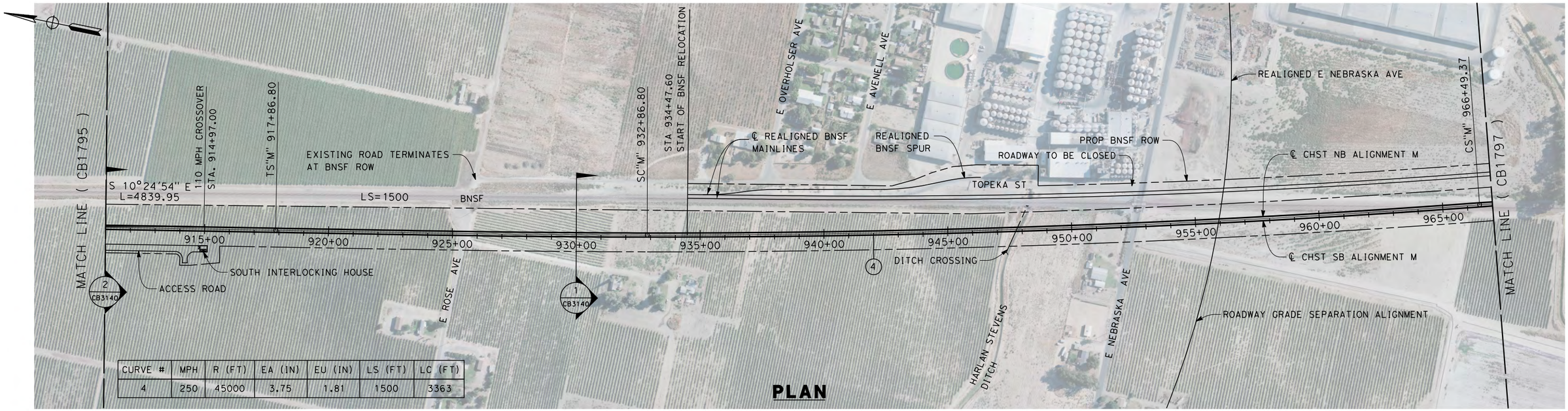


| CURVE # | MPH | R (FT) | EA (IN) | EU (IN) | LS (FT) | LC (FT) |
|---|---|---|---|---|---|---|
| 4 | 250 | 45000 | 3.75 | 1.81 | 1500 | 3363 |

**PLAN**

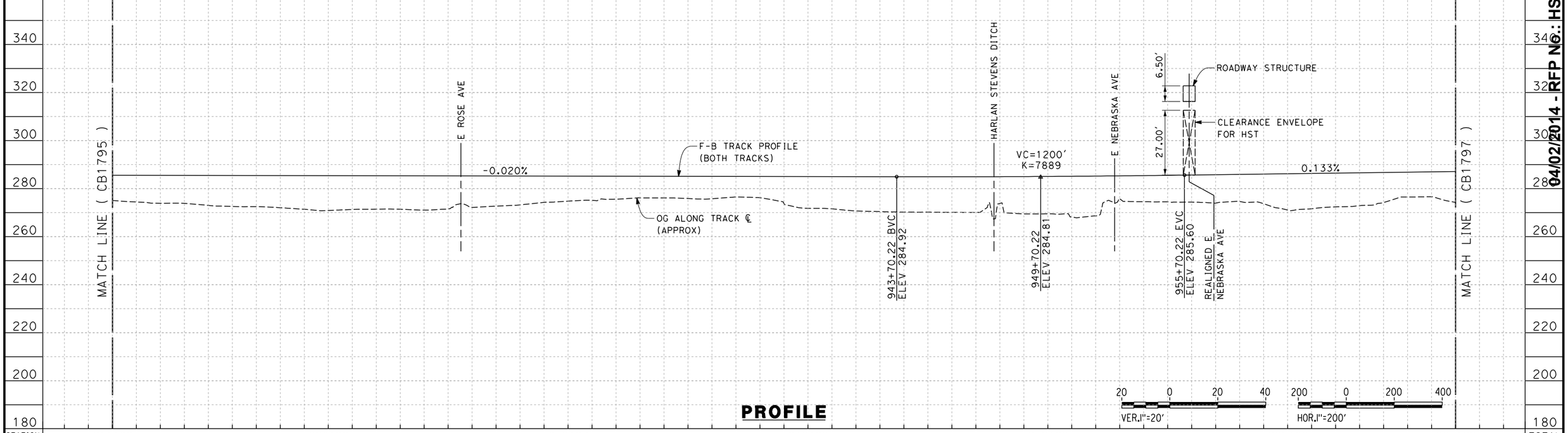


**PROFILE**

| REV | DATE | BY | CHK | APP | DESCRIPTION |
|---|---|---|---|---|---|

DESIGNED BY S. LITSAS
DRAWN BY P. TONKIN
CHECKED BY K. SEYMOUR
IN CHARGE R. COFFIN
DATE 12/31/13

**RECORD SET 15% DESIGN SUBMISSION - NOT FOR CONSTRUCTION**

URS | HMM | ARUP
CALIFORNIA HIGH-SPEED TRAIN

CALIFORNIA HIGH-SPEED RAIL AUTHORITY

# CALIFORNIA HIGH-SPEED TRAIN PROJECT FRESNO TO BAKERSFIELD

MONMOUTH SUBSECTION
ALIGNMENT M
STA. 911+00 TO 967+00
PLAN AND PROFILE

CONTRACT NO. HSR 06-0003
DRAWING NO. CB1796
SCALE AS SHOWN
SHEET NO. 7 OF 11

$FILE$ $TIME$ $DATE$ $USER$

04/02/2014 - RFP No.: HSR 13-57

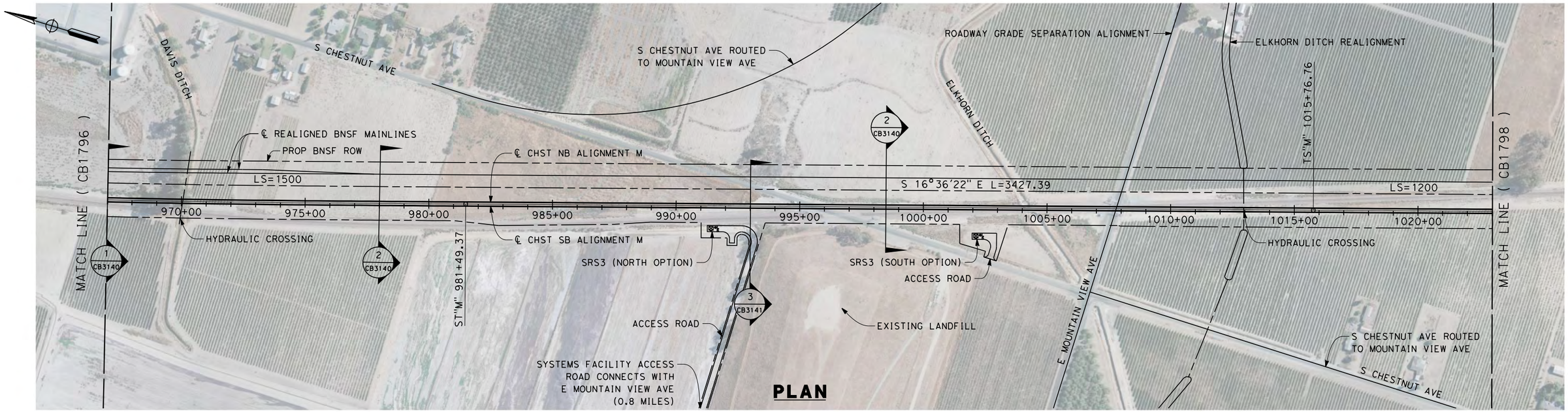


## PLAN

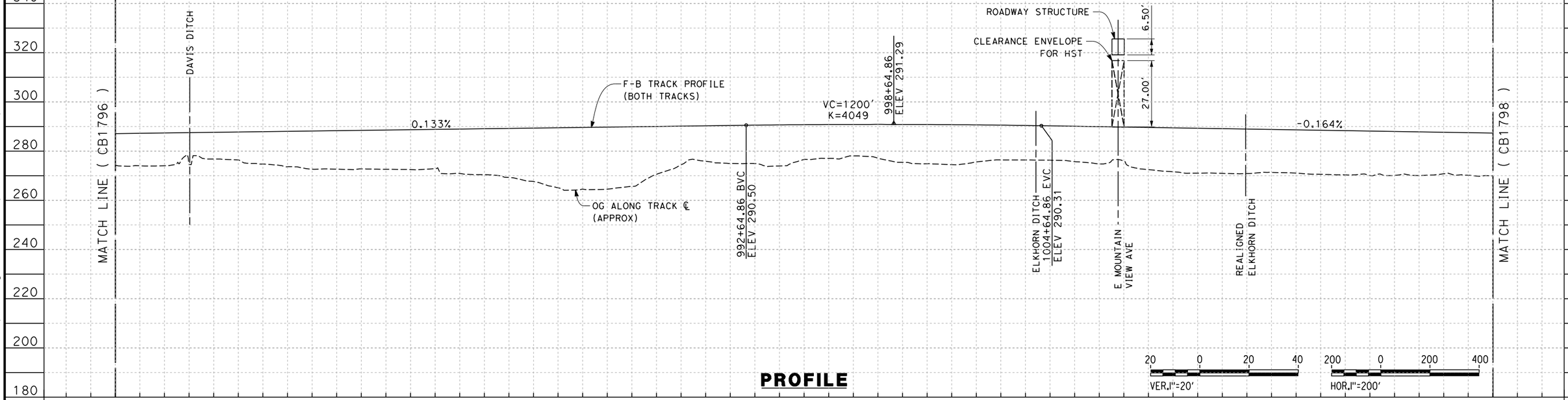


## PROFILE

| STATION | 967+00 | 970+00 | 980+00 | 990+00 | 1000+00 | 1010+00 | 1020+00 | 1023+00 | TOTAL |
|---|---|---|---|---|---|---|---|---|---|
| CY Exc | | | | | | | | | |
| CY Emb | | | | | | | | | |

| REV | DATE | BY | CHK | APP | DESCRIPTION |
|---|---|---|---|---|---|

DESIGNED BY S. LITSAS
DRAWN BY P. TONKIN
CHECKED BY K. SEYMOUR
IN CHARGE R. COFFIN
DATE 12/31/13

**RECORD SET 15% DESIGN SUBMISSION - NOT FOR CONSTRUCTION**

URS | HMM | ARUP
CALIFORNIA HIGH-SPEED TRAIN

CALIFORNIA HIGH-SPEED RAIL AUTHORITY

# CALIFORNIA HIGH-SPEED TRAIN PROJECT
# FRESNO TO BAKERSFIELD

MONMOUTH SUBSECTION
ALIGNMENT M
STA. 967+00 TO 1023+00
PLAN AND PROFILE

CONTRACT NO. HSR 06-0003
DRAWING NO. CB1797
SCALE AS SHOWN
SHEET NO. 8 OF 11

04/02/2014 - RFP No.: HSR 13-57

12/12/2013 3:16:53 PM c:\pwworking\hmm\external\paul.tonkin01-grup.com\d0125159\VFB-CB-1797-M.dgn paul.tonkin

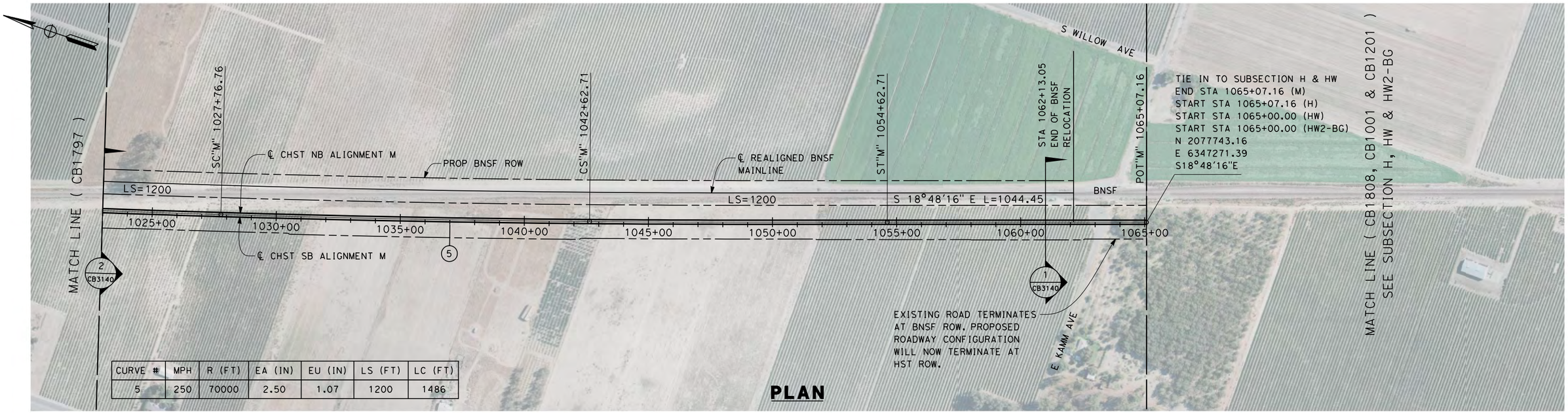


| CURVE # | MPH | R (FT) | EA (IN) | EU (IN) | LS (FT) | LC (FT) |
|---|---|---|---|---|---|---|
| 5 | 250 | 70000 | 2.50 | 1.07 | 1200 | 1486 |

**PLAN**

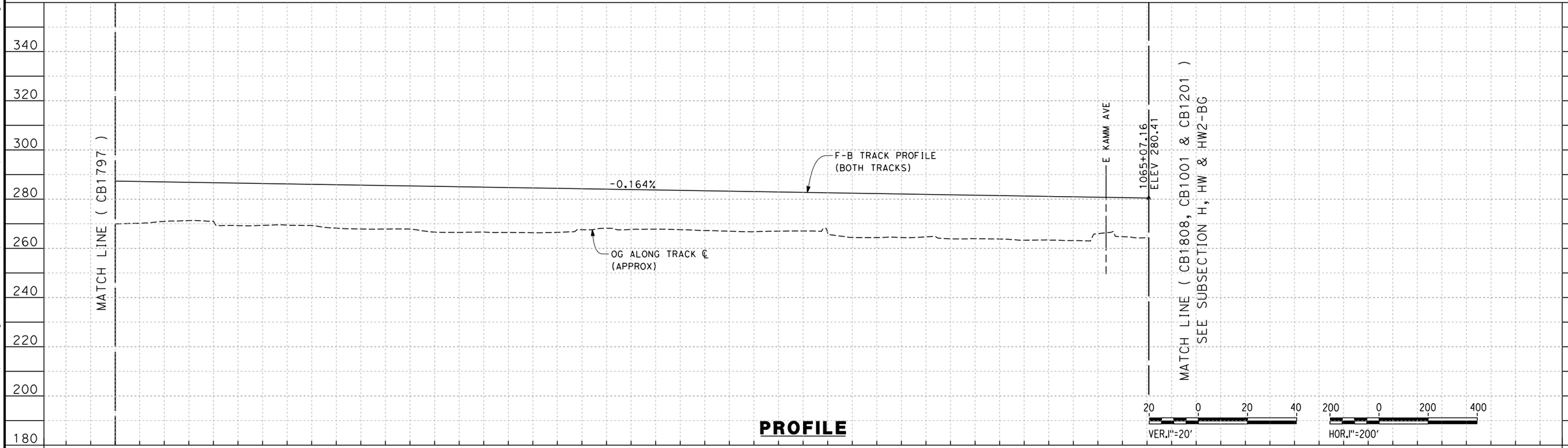


**PROFILE**

| REV | DATE | BY | CHK | APP | DESCRIPTION |
|---|---|---|---|---|---|

DESIGNED BY S. LITSAS
DRAWN BY P. TONKIN
CHECKED BY K. SEYMOUR
IN CHARGE R. COFFIN
DATE 12/31/13

**RECORD SET 15% DESIGN SUBMISSION - NOT FOR CONSTRUCTION**

URS | HMM | ARUP
CALIFORNIA HIGH-SPEED TRAIN

CALIFORNIA HIGH-SPEED RAIL AUTHORITY

# CALIFORNIA HIGH-SPEED TRAIN PROJECT
## FRESNO TO BAKERSFIELD
MONMOUTH SUBSECTION
ALIGNMENT M
STA. 1023+00 TO 1065+07
PLAN AND PROFILE

CONTRACT NO. HSR 06-0003
DRAWING NO. CB1798
SCALE AS SHOWN
SHEET NO. 9 OF 11

04/02/2014 - RFP No.: HSR 13-57

12/12/2013 3:18:15 PM c:\pwworking\hmm\external\paul.tonkin01-arup.com\d0125159\FB-CB-1798-M.dgn paul.tonkin

NOTES:

1. TRACKFORM SHOWN IS INDICATIVE
2. SUPERELEVATION IS NOT SHOWN IN CROSS SECTIONS. FOR DETAILS OF SUPERELEVATION SEE CURVE TABLES.
3. FOR EXTENTS OF BNSF REALIGNED TRACKS, SEE PLAN SHEETS.

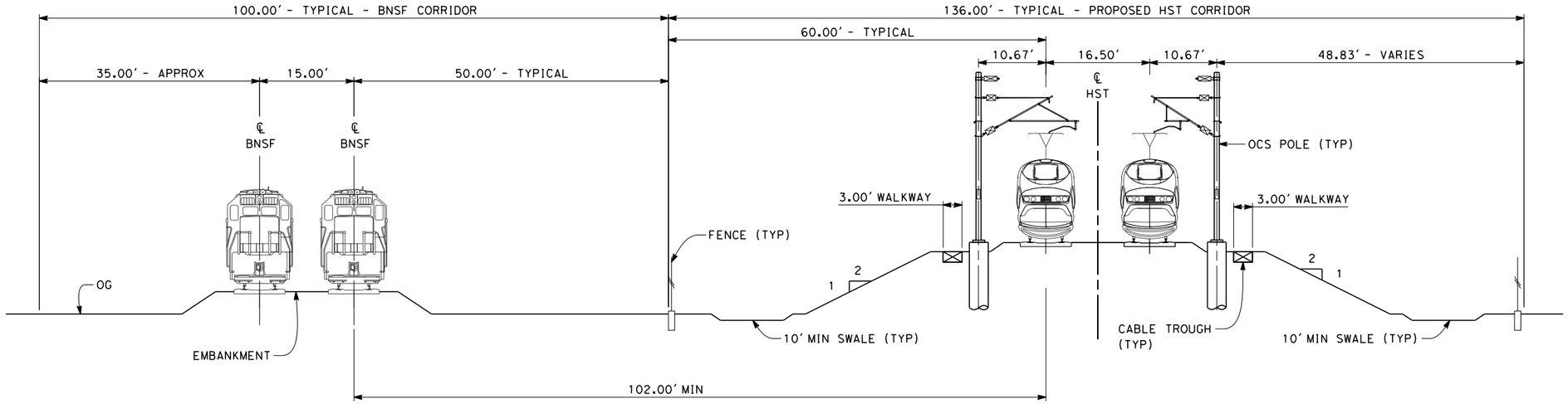


## SECTION 1

TWIN TRACK ADJACENT TO BNSF - EMBANKMENT WITH OPEN DRAINAGE
STA 630+26 THROUGH STA 894+00
STA 930+00 THROUGH STA 978+00
STA 1061+00 THROUGH STA 1065+07

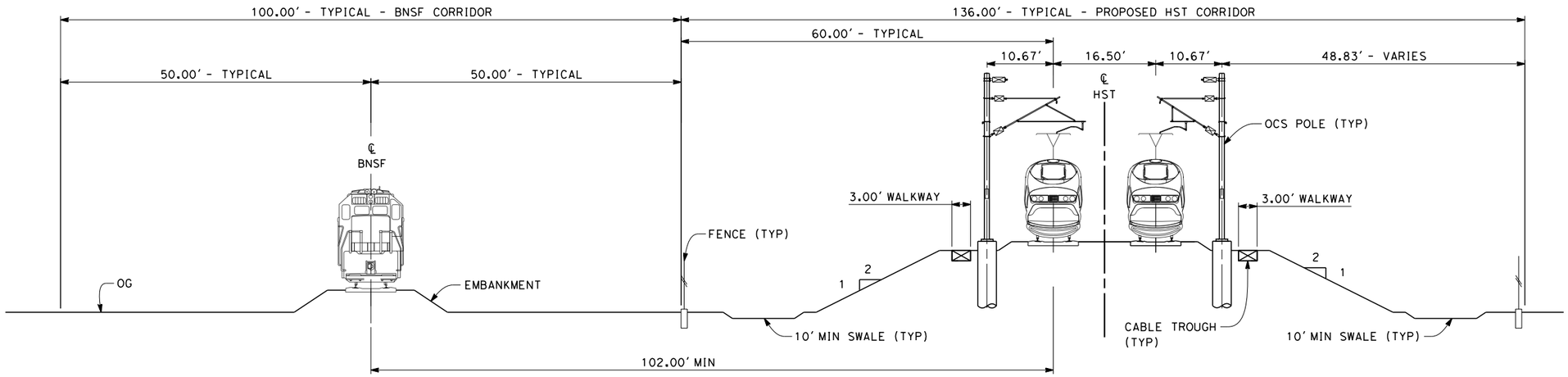


## SECTION 2

TWIN TRACK ADJACENT TO BNSF - EMBANKMENT WITH OPEN DRAINAGE
STA 894+00 THROUGH STA 930+00
STA 978+00 THROUGH STA 993+00
STA 998+40 THROUGH STA 1061+00

10 0 10 20
1"=10'

| REV | DATE | BY | CHK | APP | DESCRIPTION |
|---|---|---|---|---|---|

DESIGNED BY S. LITSAS
DRAWN BY P. TONKIN
CHECKED BY K. SEYMOUR
IN CHARGE R. COFFIN
DATE 12/31/13

**RECORD SET 15% DESIGN SUBMISSION - NOT FOR CONSTRUCTION**

URS | HMM | ARUP
CALIFORNIA HIGH-SPEED TRAIN

CALIFORNIA HIGH-SPEED RAIL AUTHORITY

**CALIFORNIA HIGH-SPEED TRAIN PROJECT**
**FRESNO TO BAKERSFIELD**
MONMOUTH SUBSECTION
ALIGNMENT M
TYPICAL SECTIONS

CONTRACT NO. HSR 06-0003
DRAWING NO. CB3140
SCALE AS SHOWN
SHEET NO. 10 OF 11

04/02/2014 - RFP No.: HSR 13-57

paul.tonkin 12/12/2013 3:19:03 PM c:\pwworking\hmm\external\paul.tonkin01-arup.com\d0125159\FB-CB-3140-M.dgn

NOTES:

1. TRACKFORM SHOWN IS INDICATIVE
2. SUPERELEVATION IS NOT SHOWN IN CROSS SECTIONS. FOR DETAILS OF SUPERELEVATION SEE CURVE TABLES.
3. FOR EXTENTS OF BNSF REALIGNED TRACKS, SEE PLAN SHEETS.

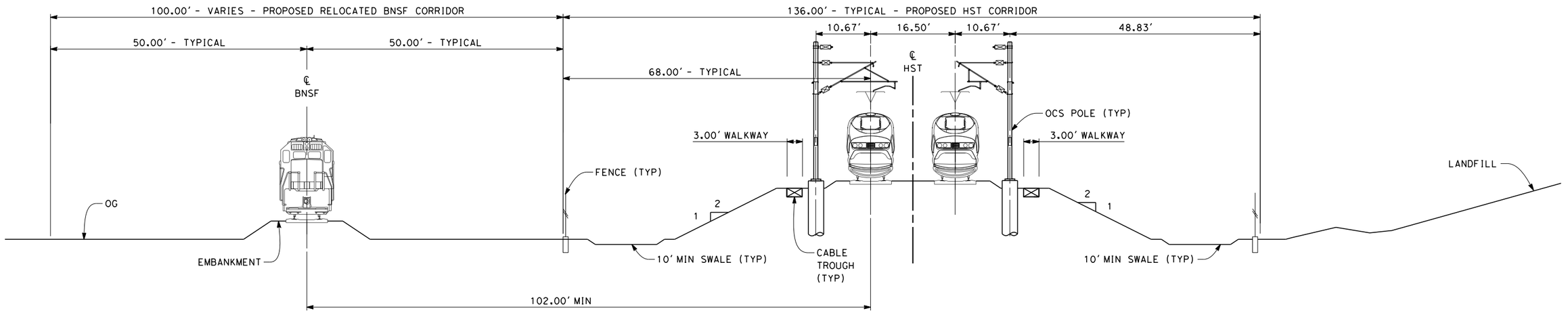


## SECTION 3

TWIN TRACK - BETWEEN LANDFILL AND REALIGNED BNSF - EMBANKMENT WITH OPEN DRAINAGE
STA 993+00 THROUGH STA 998+40

10 0 10 20
1"=10'

04/02/2014 - RFP No.: HSR 13-57

| REV | DATE | BY | CHK | APP | DESCRIPTION |
|---|---|---|---|---|---|

DESIGNED BY S. LITSAS
DRAWN BY P. TONKIN
CHECKED BY K. SEYMOUR
IN CHARGE R. COFFIN
DATE 12/31/13

RECORD SET 15% DESIGN SUBMISSION - NOT FOR CONSTRUCTION

URS | HMM | ARUP
CALIFORNIA HIGH-SPEED TRAIN

CALIFORNIA HIGH-SPEED RAIL AUTHORITY

**CALIFORNIA HIGH-SPEED TRAIN PROJECT**
**FRESNO TO BAKERSFIELD**
MONMOUTH SUBSECTION
ALIGNMENT M
TYPICAL SECTIONS

CONTRACT NO. HSR 06-0003
DRAWING NO. CB3141
SCALE AS SHOWN
SHEET NO. 11 OF 11

paul.tonkin 12/12/2013 3:20:05 PM c:\pwworking\hmm\external\paul.tonkin01-arup.com\d0125159\FB-CB-3141-M.dgn

04/02/2014 - RFP No.: HSR 13-57

12/9/2013 5:29:55 PM c:\pwworking\hmm\external\eron.sudhausen-arup.com\d0125343\FB-CB-1800-H.dgn

eron.sudhausen

| REV | DATE | BY | CHK | APP | DESCRIPTION |
|---|---|---|---|---|---|
| | | | | | |

DESIGNED BY A. POLING
DRAWN BY J. BORGHESI
CHECKED BY K. SEYMOUR
IN CHARGE R. COFFIN
DATE 12/31/13

**RECORD SET 15% DESIGN SUBMISSION - NOT FOR CONSTRUCTION**

URS | HMM | ARUP
CALIFORNIA HIGH-SPEED TRAIN

CALIFORNIA
HIGH-SPEED RAIL AUTHORITY

# CALIFORNIA HIGH-SPEED TRAIN PROJECT
## FRESNO TO BAKERSFIELD
HANFORD SUBSECTION
ALIGNMENT H
STA. 1065+07 TO 2144+63
KEY MAP

CONTRACT NO. HSR 06-0003
DRAWING NO. CB1800
SCALE AS SHOWN
SHEET NO. 1 OF 31

**PLAN**

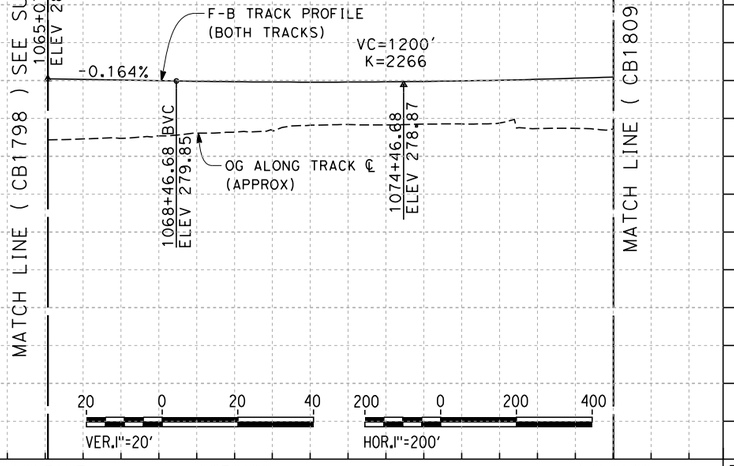


**PROFILE**

| STATION | | 1065+07 | 1070+00 | 1080+00 | TOTAL |
|---|---|---|---|---|---|
| CY | Exc | | | | |
| | Emb | | | | |

| REV | DATE | BY | CHK | APP | DESCRIPTION |
|---|---|---|---|---|---|

DESIGNED BY A. POLING
DRAWN BY J. BORGHESI
CHECKED BY K. SEYMOUR
IN CHARGE R.COFFIN
DATE 12/31/13

**RECORD SET 15% DESIGN SUBMISSION - NOT FOR CONSTRUCTION**

URS | HMM | ARUP
CALIFORNIA HIGH-SPEED TRAIN

CALIFORNIA HIGH-SPEED RAIL AUTHORITY

# CALIFORNIA HIGH-SPEED TRAIN PROJECT
# FRESNO TO BAKERSFIELD
HANFORD SUBSECTION
ALIGNMENT H
STA. 1065+07 TO 1080+00
PLAN AND PROFILE

CONTRACT NO. HSR 06-0003
DRAWING NO. CB1808
SCALE AS SHOWN
SHEET NO. 2 OF 31

04/02/2014 - RFP No.: HSR 13-57

alexander.poling 12/10/2013 5:12:12 PM c:\pwworking\hmm\external\alexander.poling-arup.com\d0125343\FB-CB-1808-H.dgn

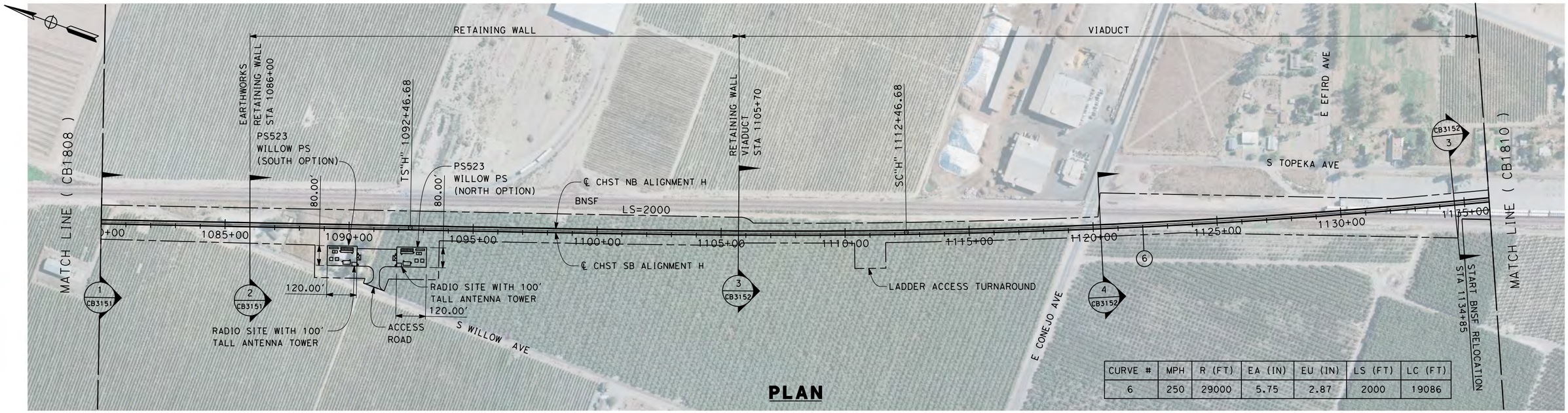


| CURVE # | MPH | R (FT) | EA (IN) | EU (IN) | LS (FT) | LC (FT) |
|---|---|---|---|---|---|---|
| 6 | 250 | 29000 | 5.75 | 2.87 | 2000 | 19086 |

**PLAN**

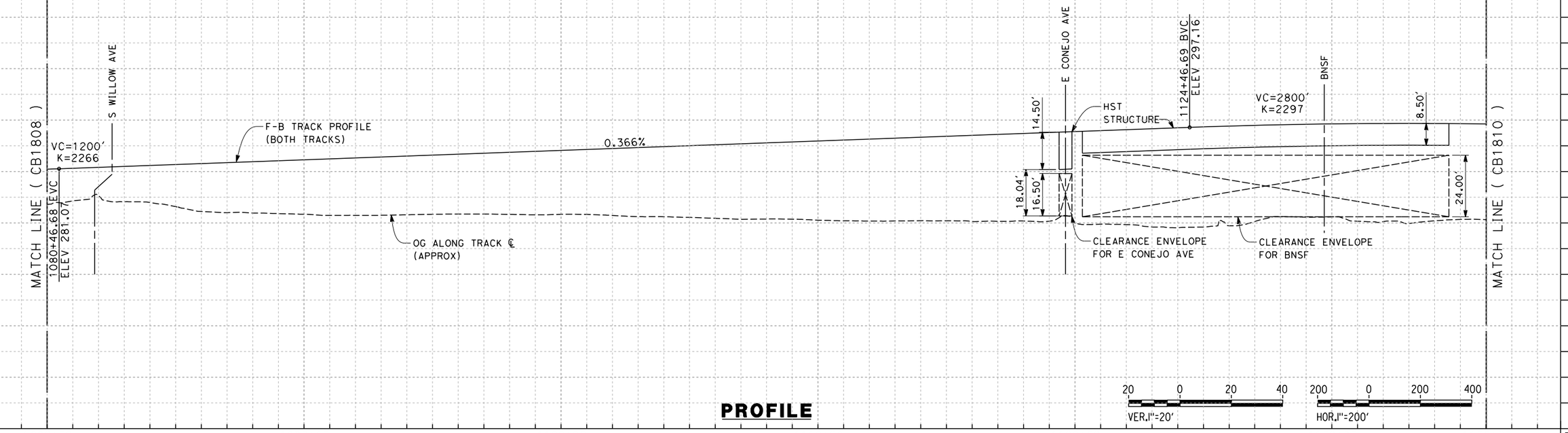


**PROFILE**

| STATION | 1080+00 | 1090+00 | 1100+00 | 1110+00 | 1120+00 | 1130+00 | 1136+00 | TOTAL |
|---|---|---|---|---|---|---|---|---|
| CY Exc | | | | | | | | |
| CY Emb | | | | | | | | |

| REV | DATE | BY | CHK | APP | DESCRIPTION |
|---|---|---|---|---|---|

DESIGNED BY A. POLING
DRAWN BY J. BORGHESI
CHECKED BY K. SEYMOUR
IN CHARGE R.COFFIN
DATE 12/31/13

**RECORD SET 15% DESIGN SUBMISSION - NOT FOR CONSTRUCTION**

URS | HMM | ARUP
CALIFORNIA HIGH-SPEED TRAIN

CALIFORNIA HIGH-SPEED RAIL AUTHORITY

**CALIFORNIA HIGH-SPEED TRAIN PROJECT**
**FRESNO TO BAKERSFIELD**
HANFORD SUBSECTION
ALIGNMENT H
STA. 1080+00 TO 1136+00
PLAN AND PROFILE

CONTRACT NO. HSR 06-0003
DRAWING NO. CB1809
SCALE AS SHOWN
SHEET NO. 3 OF 31

04/02/2014 - RFP No.: HSR 13-57

alexander.poling 12/10/2013 5:13:35 PM c:\pwworking\hmm\external\alexander.poling-arup.com\d0125343\FB-CB-1809-H.dgn

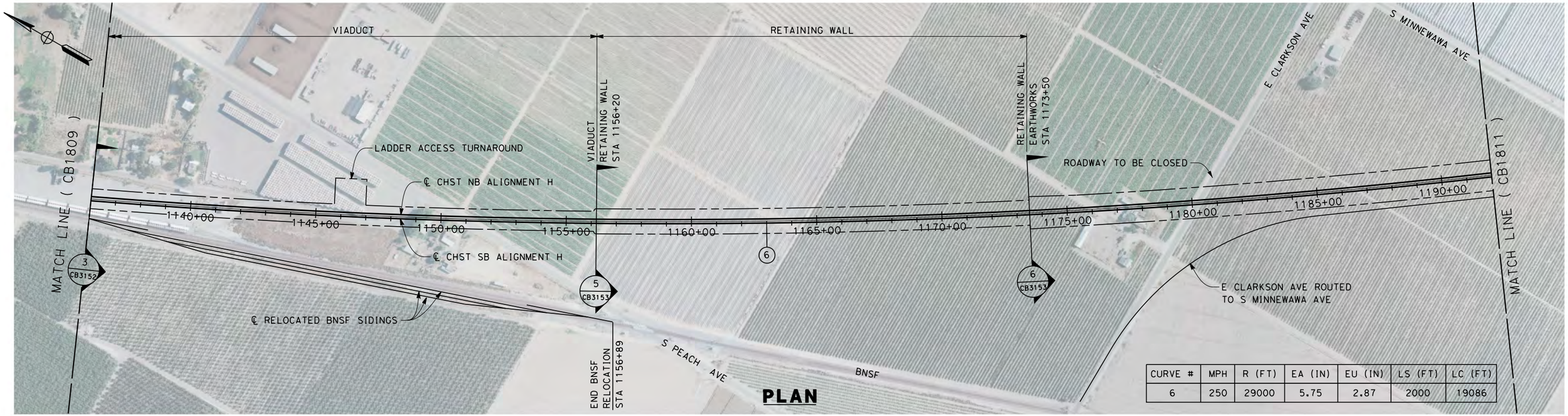


**PLAN**

| CURVE # | MPH | R (FT) | EA (IN) | EU (IN) | LS (FT) | LC (FT) |
|---|---|---|---|---|---|---|
| 6 | 250 | 29000 | 5.75 | 2.87 | 2000 | 19086 |

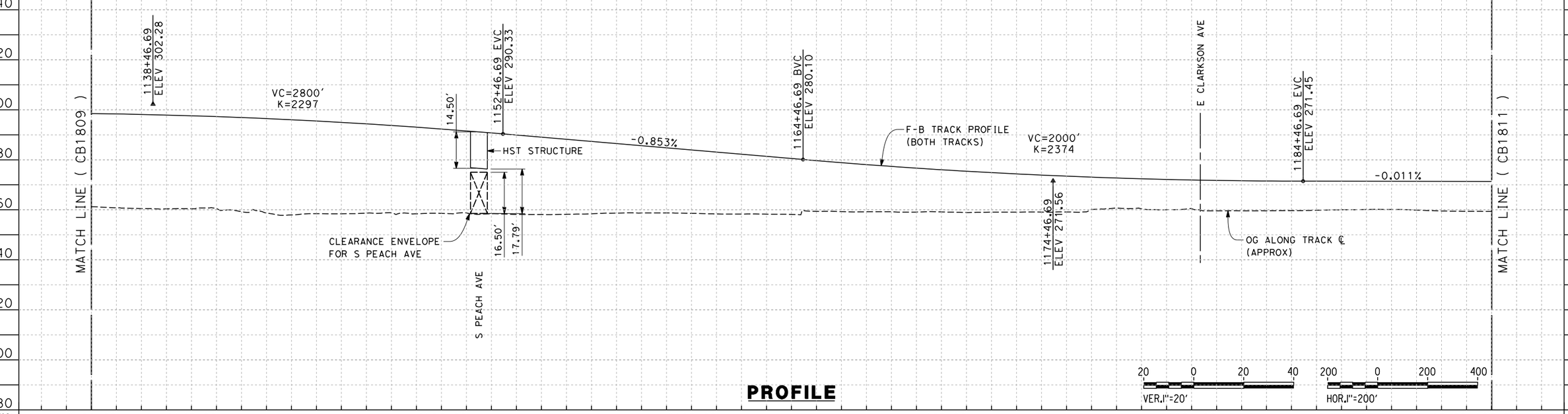


**PROFILE**

| REV | DATE | BY | CHK | APP | DESCRIPTION |
|---|---|---|---|---|---|

DESIGNED BY A. POLING
DRAWN BY J. BORGHESI
CHECKED BY K. SEYMOUR
IN CHARGE R.COFFIN
DATE 12/31/13

**RECORD SET 15% DESIGN SUBMISSION - NOT FOR CONSTRUCTION**

URS | HMM | ARUP
CALIFORNIA HIGH-SPEED TRAIN

CALIFORNIA HIGH-SPEED RAIL AUTHORITY

**CALIFORNIA HIGH-SPEED TRAIN PROJECT**
**FRESNO TO BAKERSFIELD**
HANFORD SUBSECTION
ALIGNMENT H
STA. 1136+00 TO 1192+00
PLAN AND PROFILE

CONTRACT NO. HSR 06-0003
DRAWING NO. CB1810
SCALE AS SHOWN
SHEET NO. 4 OF 31

04/02/2014 - RFP No.: HSR 13-57

alexander.poling 12/10/2013 5:14:58 PM c:\pwworking\hmm\external\alexander.poling-arup.com\d0125343\FB-CB-1810-H.dgn

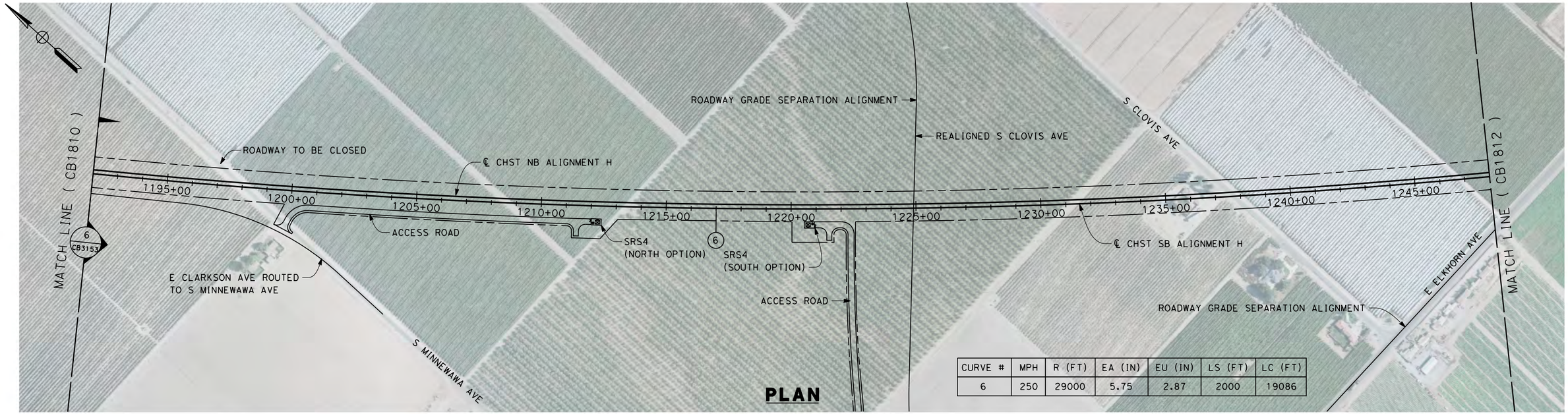


| CURVE # | MPH | R (FT) | EA (IN) | EU (IN) | LS (FT) | LC (FT) |
|---|---|---|---|---|---|---|
| 6 | 250 | 29000 | 5.75 | 2.87 | 2000 | 19086 |

**PLAN**

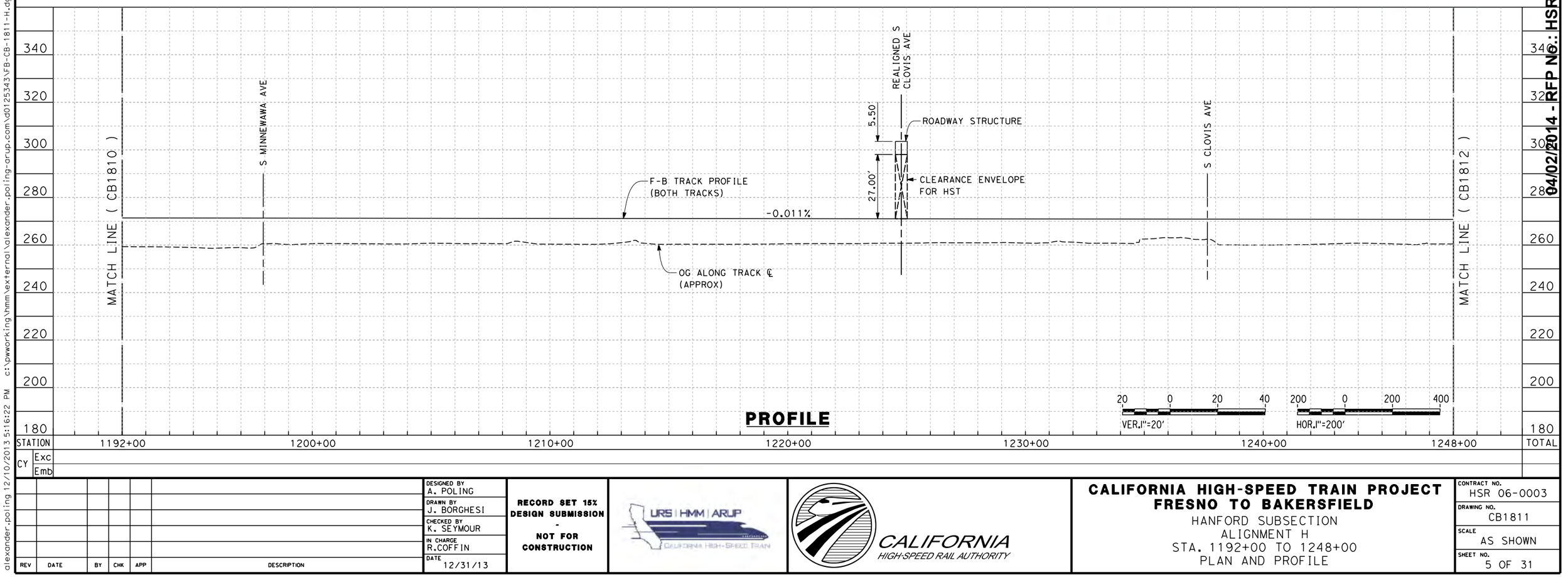


**PROFILE**

| REV | DATE | BY | CHK | APP | DESCRIPTION |
|---|---|---|---|---|---|

DESIGNED BY A. POLING
DRAWN BY J. BORGHESI
CHECKED BY K. SEYMOUR
IN CHARGE R.COFFIN
DATE 12/31/13

**RECORD SET 15% DESIGN SUBMISSION - NOT FOR CONSTRUCTION**

URS | HMM | ARUP
CALIFORNIA HIGH-SPEED TRAIN

CALIFORNIA
HIGH-SPEED RAIL AUTHORITY

# CALIFORNIA HIGH-SPEED TRAIN PROJECT
# FRESNO TO BAKERSFIELD

HANFORD SUBSECTION
ALIGNMENT H
STA. 1192+00 TO 1248+00
PLAN AND PROFILE

CONTRACT NO. HSR 06-0003
DRAWING NO. CB1811
SCALE AS SHOWN
SHEET NO. 5 OF 31

04/02/2014 - RFP No.: HSR 13-57

alexander.poling 12/10/2013 5:16:22 PM c:\pwworking\hmm\external\alexander.poling-arup.com\d0125343\FB-CB-1811-H.dgn

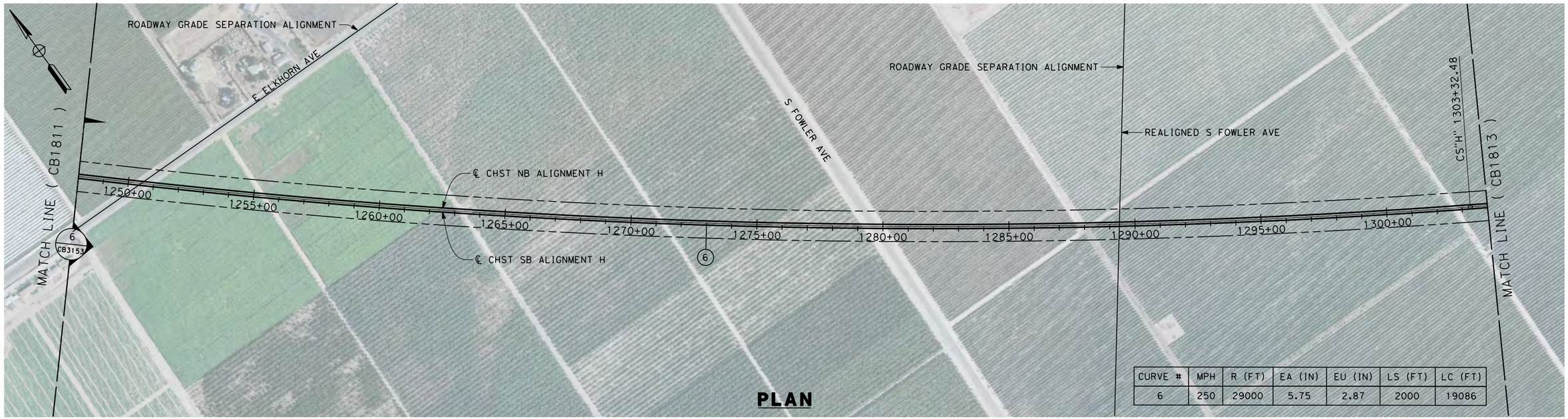


| CURVE # | MPH | R (FT) | EA (IN) | EU (IN) | LS (FT) | LC (FT) |
|---|---|---|---|---|---|---|
| 6 | 250 | 29000 | 5.75 | 2.87 | 2000 | 19086 |

**PLAN**

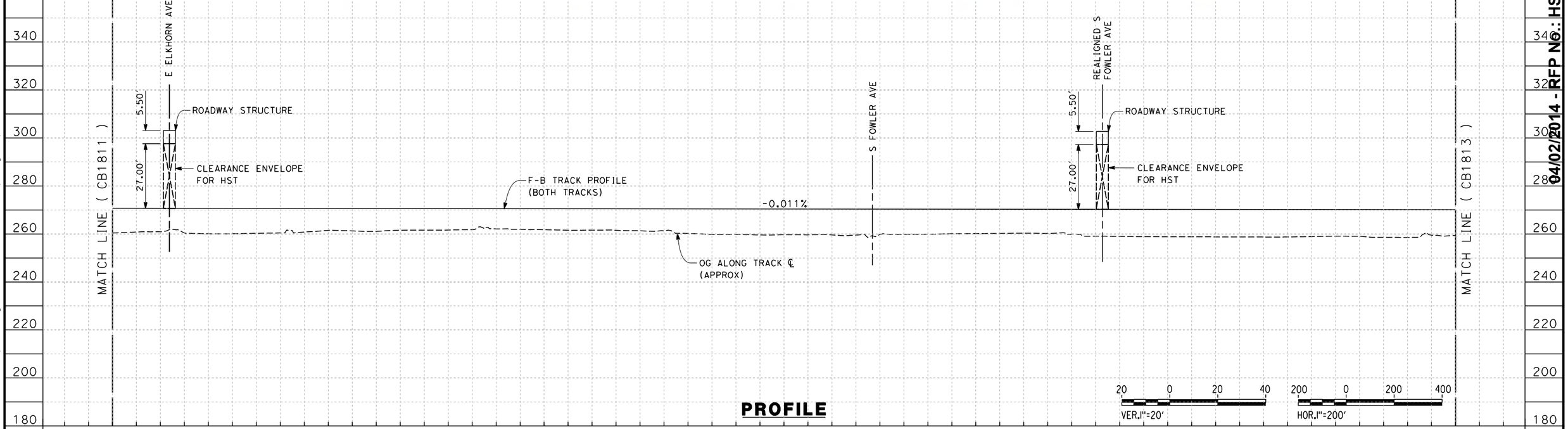


**PROFILE**

| STATION | 1248+00 | 1250+00 | 1260+00 | 1270+00 | 1280+00 | 1290+00 | 1300+00 | 1304+00 | TOTAL |
|---|---|---|---|---|---|---|---|---|---|
| CY Exc | | | | | | | | | |
| CY Emb | | | | | | | | | |

| REV | DATE | BY | CHK | APP | DESCRIPTION |
|---|---|---|---|---|---|

DESIGNED BY A. POLING
DRAWN BY J. BORGHESI
CHECKED BY K. SEYMOUR
IN CHARGE R.COFFIN
DATE 12/31/13

**RECORD SET 15% DESIGN SUBMISSION - NOT FOR CONSTRUCTION**

URS | HMM | ARUP
CALIFORNIA HIGH-SPEED TRAIN

CALIFORNIA HIGH-SPEED RAIL AUTHORITY

**CALIFORNIA HIGH-SPEED TRAIN PROJECT**
**FRESNO TO BAKERSFIELD**
HANFORD SUBSECTION
ALIGNMENT H
STA 1248+00 TO 1304+00
PLAN AND PROFILE

CONTRACT NO. HSR 06-0003
DRAWING NO. CB1812
SCALE AS SHOWN
SHEET NO. 6 OF 31

04/02/2014 - RFP NO.: HSR 13-57

alexander.poling 12/10/2013 5:17:54 PM c:\pwworking\hmm\external\alexander.poling-arup.com\d0125343\FB-CB-1812-H.dgn

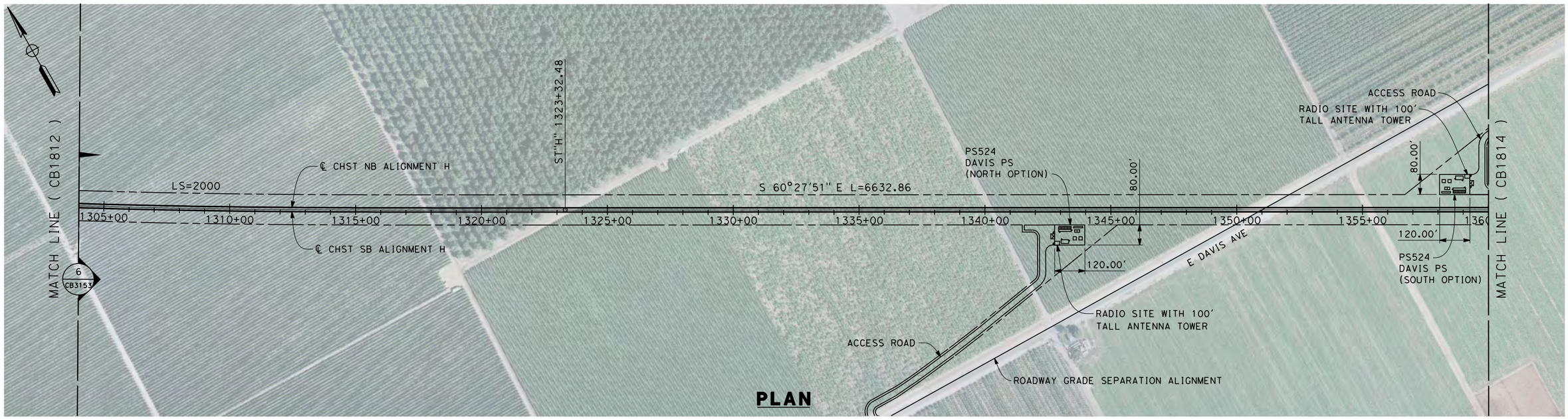


**PLAN**

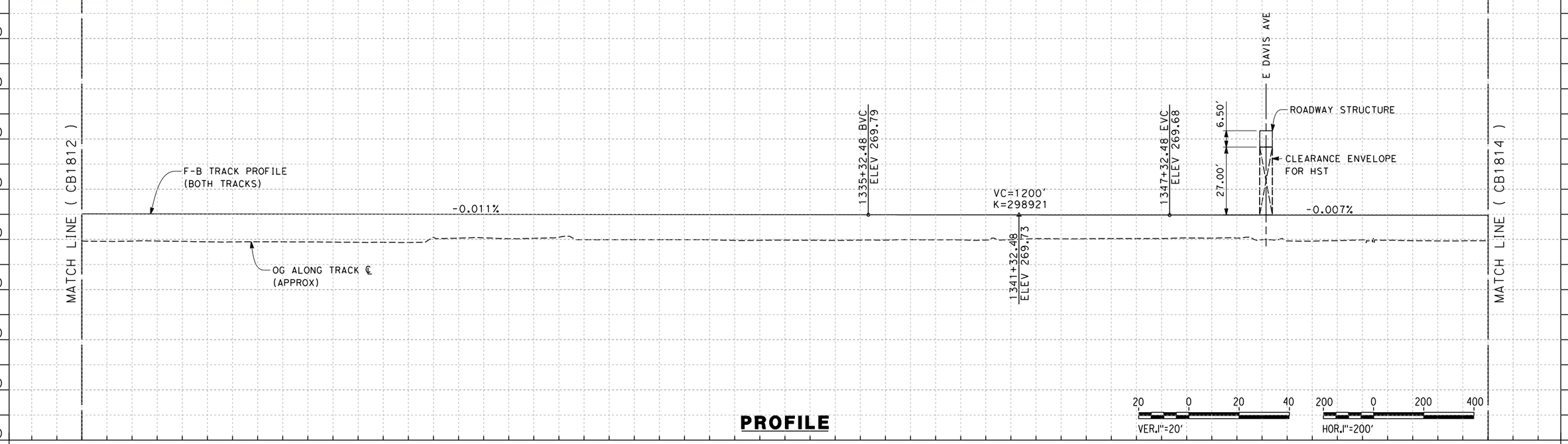


**PROFILE**

| STATION | 1304+00 | 1310+00 | 1320+00 | 1330+00 | 1340+00 | 1350+00 | 1360+00 | TOTAL |
|---|---|---|---|---|---|---|---|---|
| CY Exc | | | | | | | | |
| CY Emb | | | | | | | | |

| REV | DATE | BY | CHK | APP | DESCRIPTION |
|---|---|---|---|---|---|

DESIGNED BY A. POLING
DRAWN BY J. BORGHESI
CHECKED BY K. SEYMOUR
IN CHARGE R.COFFIN
DATE 12/31/13

**RECORD SET 15% DESIGN SUBMISSION - NOT FOR CONSTRUCTION**

URS | HMM | ARUP
CALIFORNIA HIGH-SPEED TRAIN

CALIFORNIA
HIGH-SPEED RAIL AUTHORITY

# CALIFORNIA HIGH-SPEED TRAIN PROJECT
# FRESNO TO BAKERSFIELD

HANFORD SUBSECTION
ALIGNMENT H
STA. 1304+00 TO 1360+00
PLAN AND PROFILE

CONTRACT NO. HSR 06-0003
DRAWING NO. CB1813
SCALE AS SHOWN
SHEET NO. 7 OF 31

RFP No.: HSR 13-57
04/02/2014

c:\pwworking\hmm\external\alexander.poling-arup.com\d0125343\VFB-CB-1813-H.dgn
12/10/2013 5:19:24 PM
alexander.poling

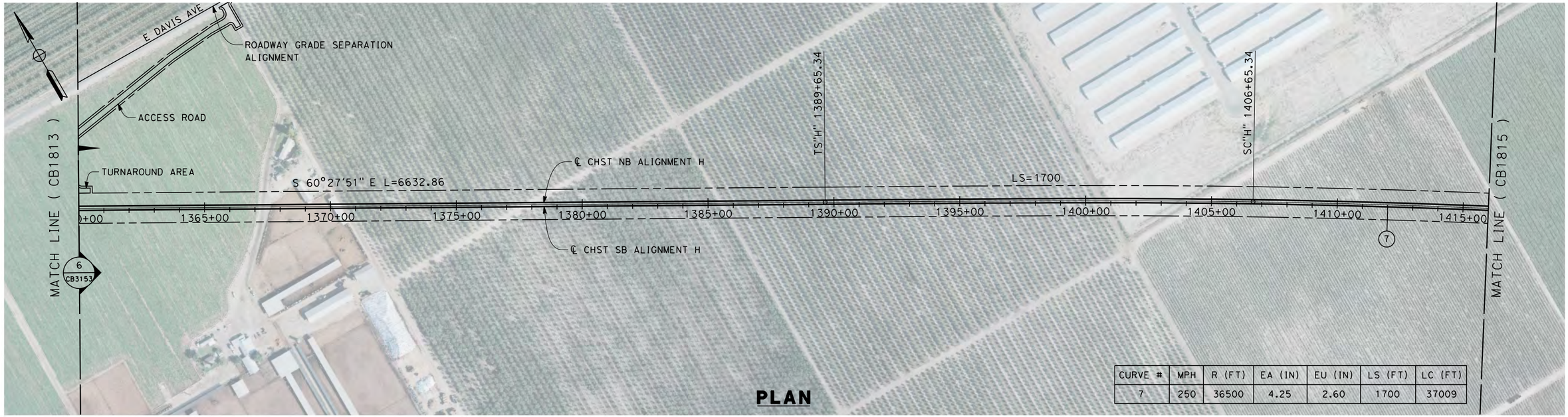


| CURVE # | MPH | R (FT) | EA (IN) | EU (IN) | LS (FT) | LC (FT) |
|---|---|---|---|---|---|---|
| 7 | 250 | 36500 | 4.25 | 2.60 | 1700 | 37009 |

**PLAN**

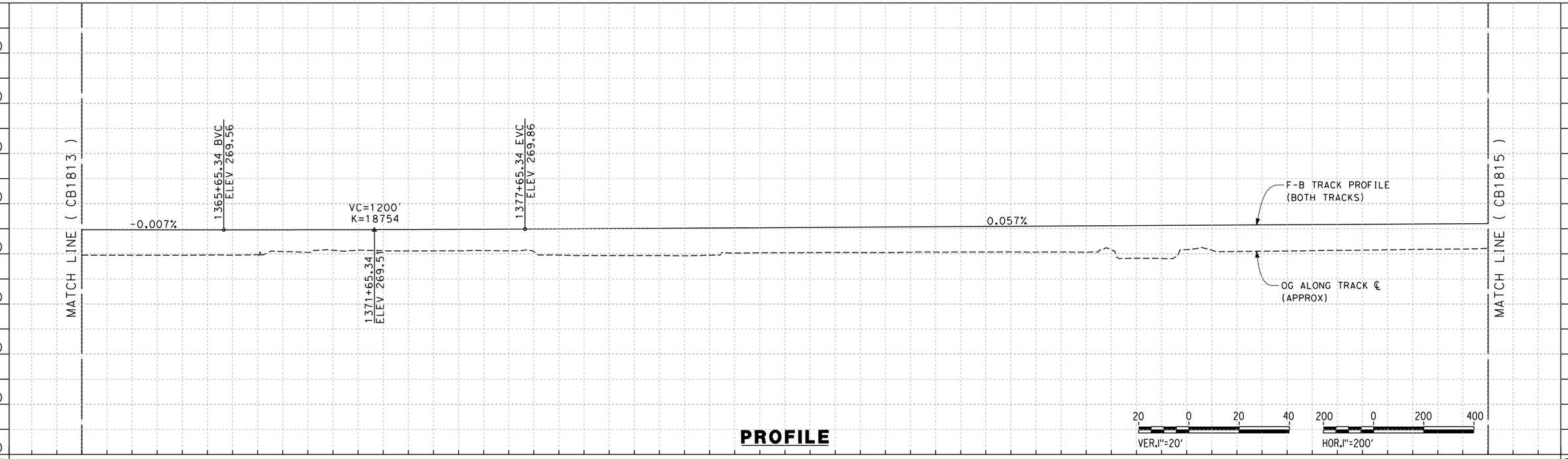


**PROFILE**

| STATION | 1360+00 | 1370+00 | 1380+00 | 1390+00 | 1400+00 | 1410+00 | 1416+00 | TOTAL |
|---|---|---|---|---|---|---|---|---|
| CY Exc | | | | | | | | |
| CY Emb | | | | | | | | |

| REV | DATE | BY | CHK | APP | DESCRIPTION |
|---|---|---|---|---|---|

DESIGNED BY A. POLING
DRAWN BY J. BORGHESI
CHECKED BY K. SEYMOUR
IN CHARGE R.COFFIN
DATE 12/31/13

**RECORD SET 15% DESIGN SUBMISSION - NOT FOR CONSTRUCTION**

URS | HMM | ARUP
CALIFORNIA HIGH-SPEED TRAIN

CALIFORNIA HIGH-SPEED RAIL AUTHORITY

**CALIFORNIA HIGH-SPEED TRAIN PROJECT**
**FRESNO TO BAKERSFIELD**
HANFORD SUBSECTION
ALIGNMENT H
STA. 1360+00 TO 1416+00
PLAN AND PROFILE

CONTRACT NO. HSR 06-0003
DRAWING NO. CB1814
SCALE AS SHOWN
SHEET NO. 8 OF 31

04/02/2014 - RFP No.: HSR 13-57

alexander.poling 12/10/2013 5:20:47 PM c:\pwworking\hmm\external\alexander.poling-arup.com\d0125343\FB-CB-1814-H.dgn

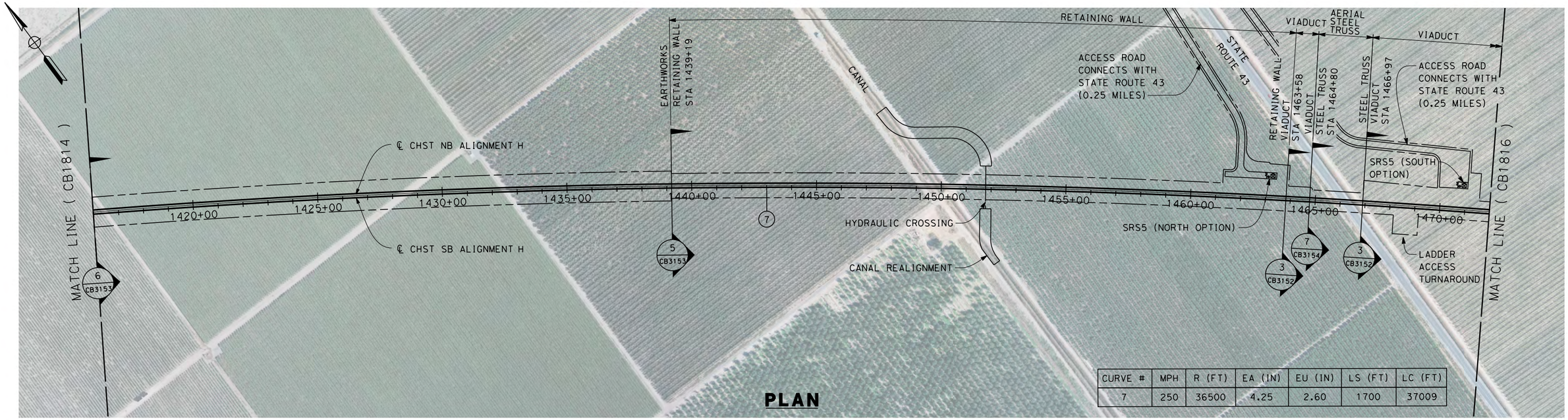


| CURVE # | MPH | R (FT) | EA (IN) | EU (IN) | LS (FT) | LC (FT) |
|---|---|---|---|---|---|---|
| 7 | 250 | 36500 | 4.25 | 2.60 | 1700 | 37009 |

**PLAN**

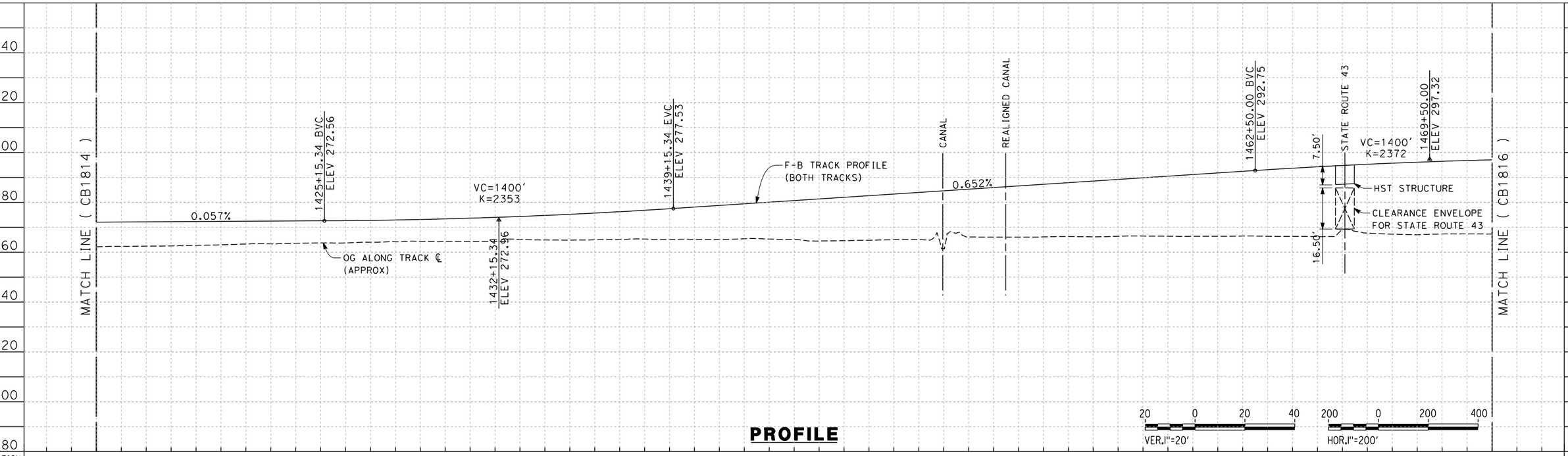


**PROFILE**

| REV | DATE | BY | CHK | APP | DESCRIPTION |
|---|---|---|---|---|---|

DESIGNED BY A. POLING
DRAWN BY J. BORGHESI
CHECKED BY K. SEYMOUR
IN CHARGE R.COFFIN
DATE 12/31/13

**RECORD SET 15% DESIGN SUBMISSION - NOT FOR CONSTRUCTION**

URS | HMM | ARUP
CALIFORNIA HIGH-SPEED TRAIN

CALIFORNIA
HIGH-SPEED RAIL AUTHORITY

# CALIFORNIA HIGH-SPEED TRAIN PROJECT
# FRESNO TO BAKERSFIELD

HANFORD SUBSECTION
ALIGNMENT H
STA. 1416+00 TO 1472+00
PLAN AND PROFILE

CONTRACT NO. HSR 06-0003
DRAWING NO. CB1815
SCALE AS SHOWN
SHEET NO. 9 OF 31

04/02/2014 - RFP No.: HSR 13-57

Nadine.Hutton 12/12/2013 4:40:29 PM c:\pwworking\hmm\external\nadine.hutton-arup.com\d0125343\FB-CB-1815-H.dgn

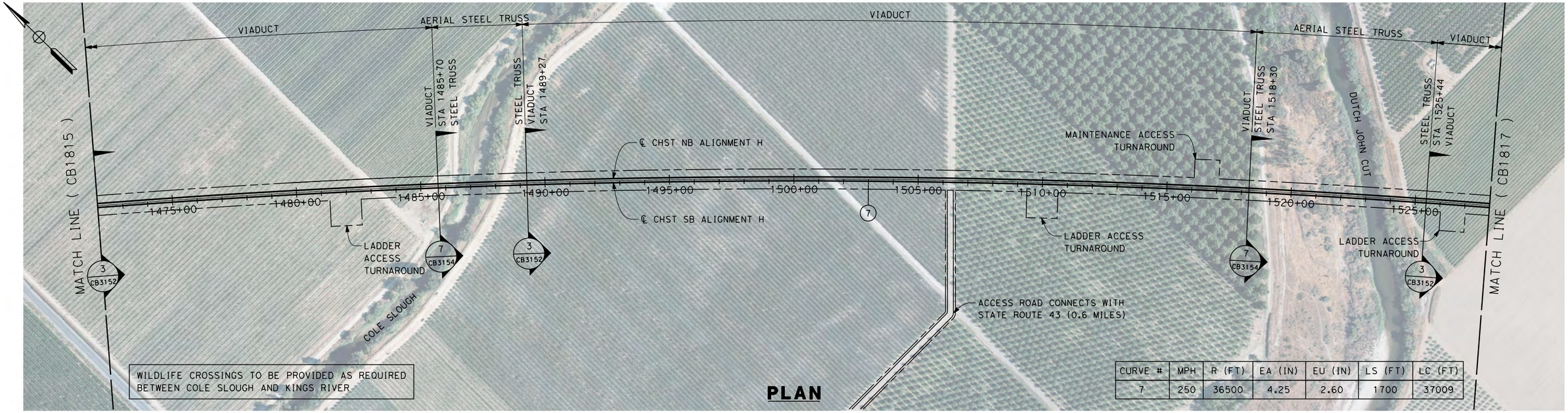


**PLAN**

| CURVE # | MPH | R (FT) | EA (IN) | EU (IN) | LS (FT) | LC (FT) |
|---|---|---|---|---|---|---|
| 7 | 250 | 36500 | 4.25 | 2.60 | 1700 | 37009 |

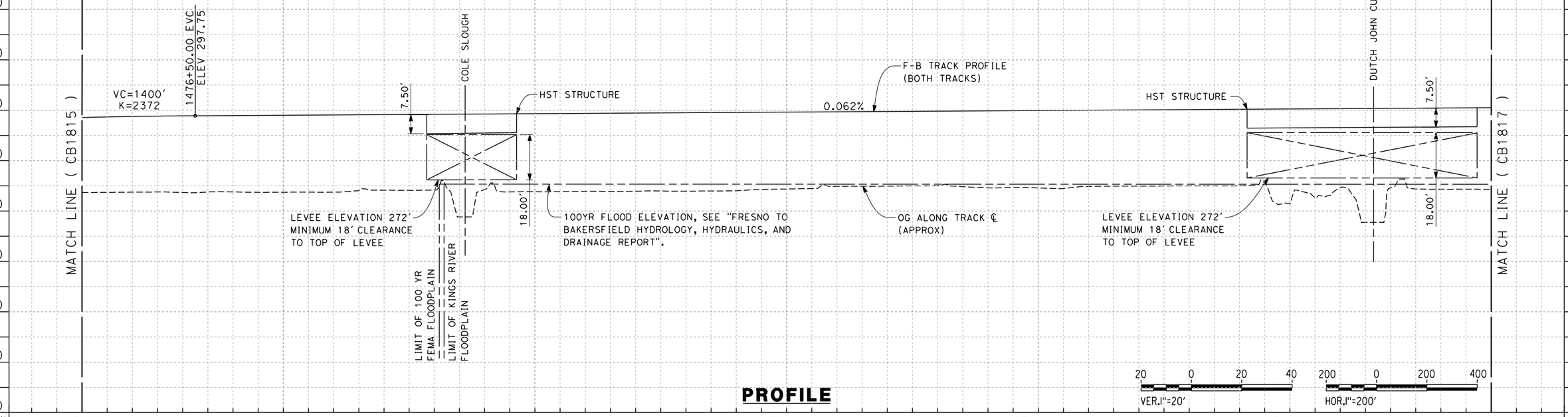


**PROFILE**

| REV | DATE | BY | CHK | APP | DESCRIPTION |
|---|---|---|---|---|---|
| | | | | | |

DESIGNED BY A. POLING
DRAWN BY J. BORGHESI
CHECKED BY K. SEYMOUR
IN CHARGE R.COFFIN
DATE 12/31/13

**RECORD SET 15% DESIGN SUBMISSION - NOT FOR CONSTRUCTION**

URS | HMM | ARUP
CALIFORNIA HIGH-SPEED TRAIN

CALIFORNIA HIGH-SPEED RAIL AUTHORITY

**CALIFORNIA HIGH-SPEED TRAIN PROJECT**
**FRESNO TO BAKERSFIELD**
HANFORD SUBSECTION
ALIGNMENT H
STA. 1472+00 TO 1528+00
PLAN AND PROFILE

CONTRACT NO. HSR 06-0003
DRAWING NO. CB1816
SCALE AS SHOWN
SHEET NO. 10 OF 31

04/02/2014 - RFP No.: HSR 13-57

Nadine.Hutton 12/12/2013 4:37:29 PM c:\pwworking\hmm\external\nadine.hutton-arup.com\d0125343\FB-CB-1816-H.dgn

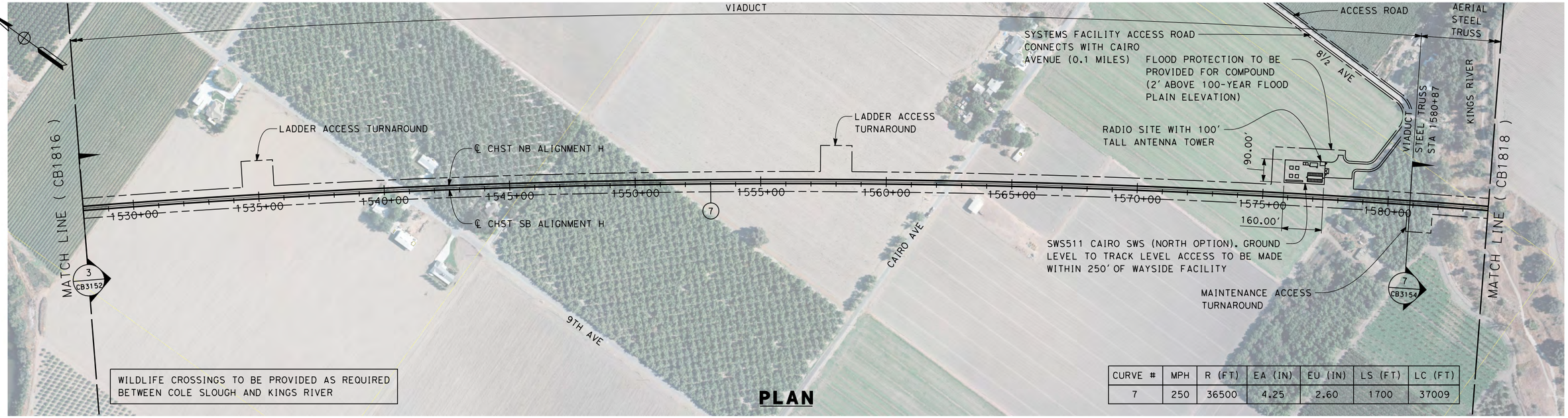


**PLAN**

| CURVE # | MPH | R (FT) | EA (IN) | EU (IN) | LS (FT) | LC (FT) |
|---|---|---|---|---|---|---|
| 7 | 250 | 36500 | 4.25 | 2.60 | 1700 | 37009 |

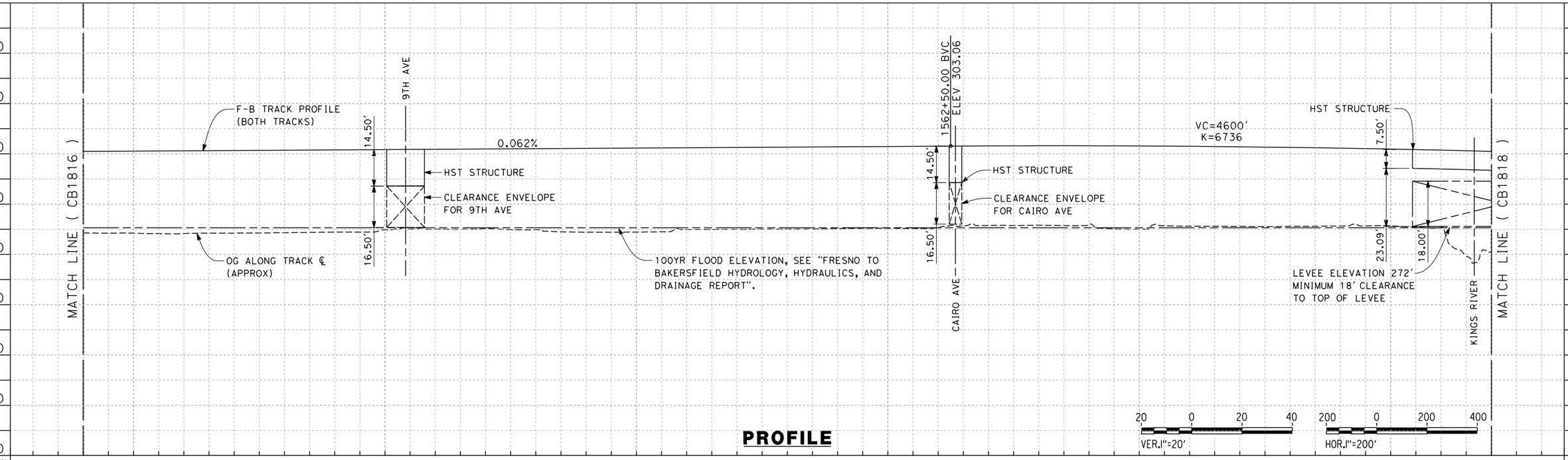


**PROFILE**

| REV | DATE | BY | CHK | APP | DESCRIPTION |
|---|---|---|---|---|---|
| | | | | | |

DESIGNED BY A. POLING
DRAWN BY J. BORGHESI
CHECKED BY K. SEYMOUR
IN CHARGE R. COFFIN
DATE 12/31/13

**RECORD SET 15% DESIGN SUBMISSION - NOT FOR CONSTRUCTION**

URS | HMM | ARUP
CALIFORNIA HIGH-SPEED TRAIN

CALIFORNIA HIGH-SPEED RAIL AUTHORITY

# CALIFORNIA HIGH-SPEED TRAIN PROJECT
# FRESNO TO BAKERSFIELD
HANFORD SUBSECTION
ALIGNMENT H
STA.1528+00 TO 1584+00
PLAN AND PROFILE

CONTRACT NO. HSR 06-0003
DRAWING NO. CB1817
SCALE AS SHOWN
SHEET NO. 11 OF 31

04/02/2014 - RFP No.: HSR 13-57

Nadine.Hutton 12/12/2013 4:34:51 PM c:\pwworking\hmm\external\nadine.hutton-arup.com\d0125343\FB-CB-1817-H.dgn

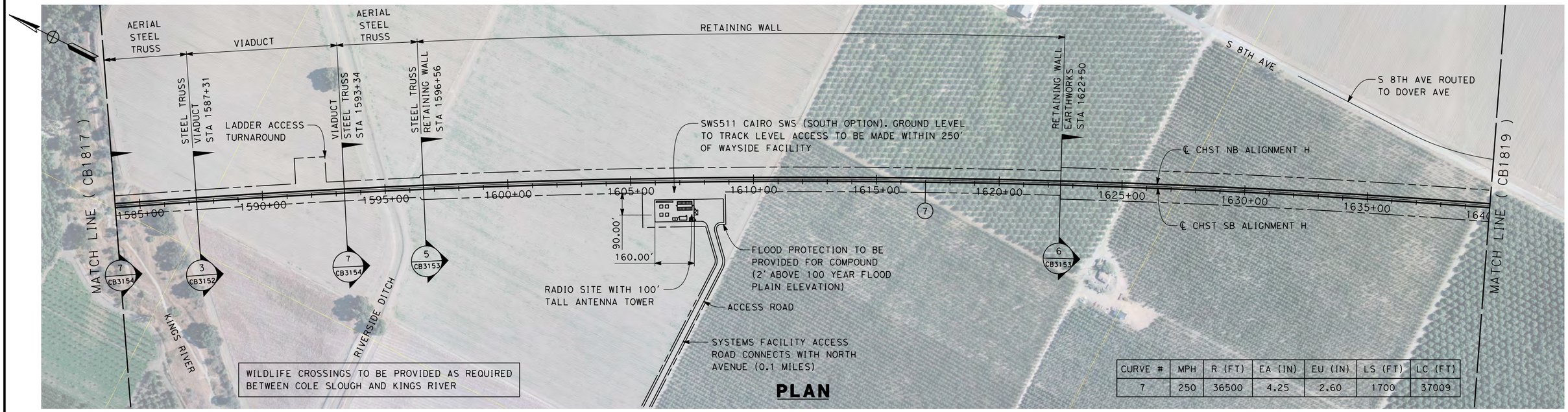


**PLAN**

| CURVE # | MPH | R (FT) | EA (IN) | EU (IN) | LS (FT) | LC (FT) |
|---|---|---|---|---|---|---|
| 7 | 250 | 36500 | 4.25 | 2.60 | 1700 | 37009 |

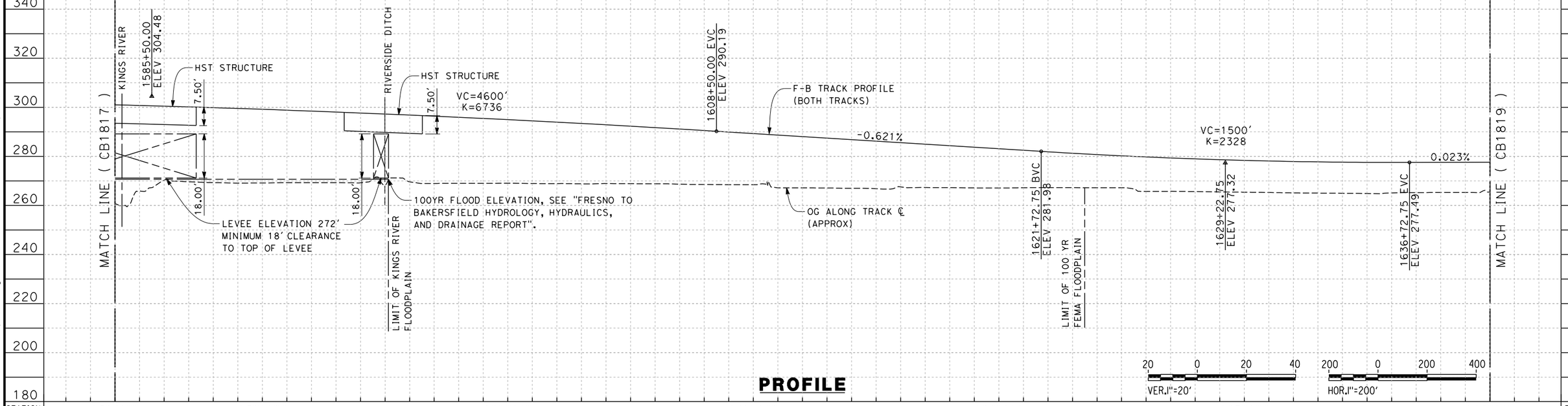


**PROFILE**

| STATION | 1584+00 | 1590+00 | 1600+00 | 1610+00 | 1620+00 | 1630+00 | 1640+00 | TOTAL |
|---|---|---|---|---|---|---|---|---|
| CY Exc | | | | | | | | |
| CY Emb | | | | | | | | |

| REV | DATE | BY | CHK | APP | DESCRIPTION |
|---|---|---|---|---|---|

DESIGNED BY A. POLING
DRAWN BY J. BORGHES
CHECKED BY K. SEYMOUR
IN CHARGE R. COFFIN
DATE 12/31/13

**RECORD SET 15% DESIGN SUBMISSION - NOT FOR CONSTRUCTION**

URS | HMM | ARUP
CALIFORNIA HIGH-SPEED TRAIN

CALIFORNIA HIGH-SPEED RAIL AUTHORITY

# CALIFORNIA HIGH-SPEED TRAIN PROJECT
## FRESNO TO BAKERSFIELD
HANFORD SUBSECTION
ALIGNMENT H
STA. 1584+00 TO 1640+00
PLAN AND PROFILE

CONTRACT NO. HSR 06-0003
DRAWING NO. CB1818
SCALE AS SHOWN
SHEET NO. 12 OF 31

04/02/2014 - RFP No.: HSR 13-57

12/12/2013 4:31:18 PM c:\pwworking\hmm\external\nadine.hutton-grup.com\d0125343\FB-CB-1818-H.dgn Nadine.Hutton

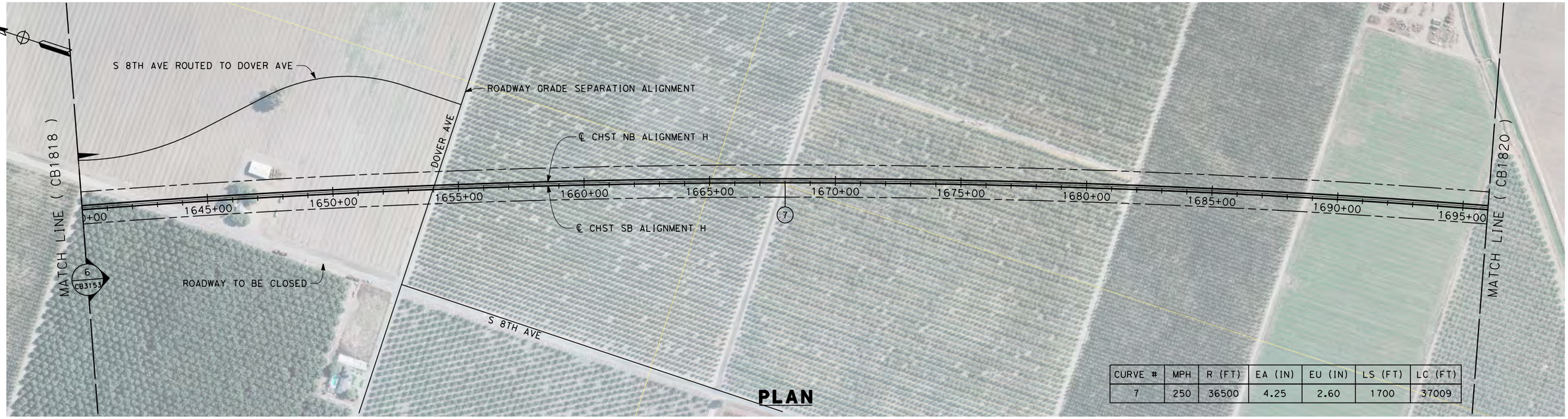


| CURVE # | MPH | R (FT) | EA (IN) | EU (IN) | LS (FT) | LC (FT) |
|---|---|---|---|---|---|---|
| 7 | 250 | 36500 | 4.25 | 2.60 | 1700 | 37009 |

**PLAN**

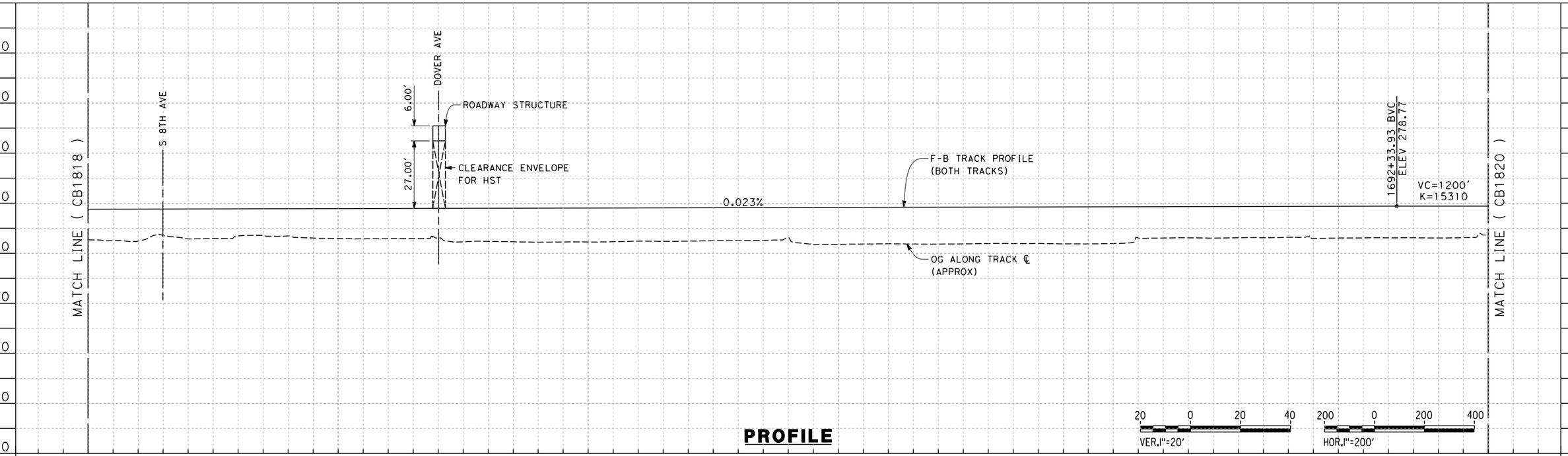


**PROFILE**

| STATION | 1640+00 | 1650+00 | 1660+00 | 1670+00 | 1680+00 | 1690+00 | 1696+00 | TOTAL |
|---|---|---|---|---|---|---|---|---|
| CY Exc | | | | | | | | |
| CY Emb | | | | | | | | |

| REV | DATE | BY | CHK | APP | DESCRIPTION |
|---|---|---|---|---|---|

DESIGNED BY A. POLING
DRAWN BY J. BORGHESI
CHECKED BY K. SEYMOUR
IN CHARGE R.COFFIN
DATE 12/31/13

**RECORD SET 15% DESIGN SUBMISSION - NOT FOR CONSTRUCTION**

URS | HMM | ARUP
California High-Speed Train

CALIFORNIA HIGH-SPEED RAIL AUTHORITY

**CALIFORNIA HIGH-SPEED TRAIN PROJECT**
**FRESNO TO BAKERSFIELD**
HANFORD SUBSECTION
ALIGNMENT H
STA. 1640+00 TO 1696+00
PLAN AND PROFILE

CONTRACT NO. HSR 06-0003
DRAWING NO. CB1819
SCALE AS SHOWN
SHEET NO. 13 OF 31

04/02/2014 - RFP No.: HSR 13-57

alexander.poling 12/10/2013 5:26:52 PM c:\pwworking\hmm\external\alexander.poling-arup.com\d0125343\FB-CB-1819-H.dgn

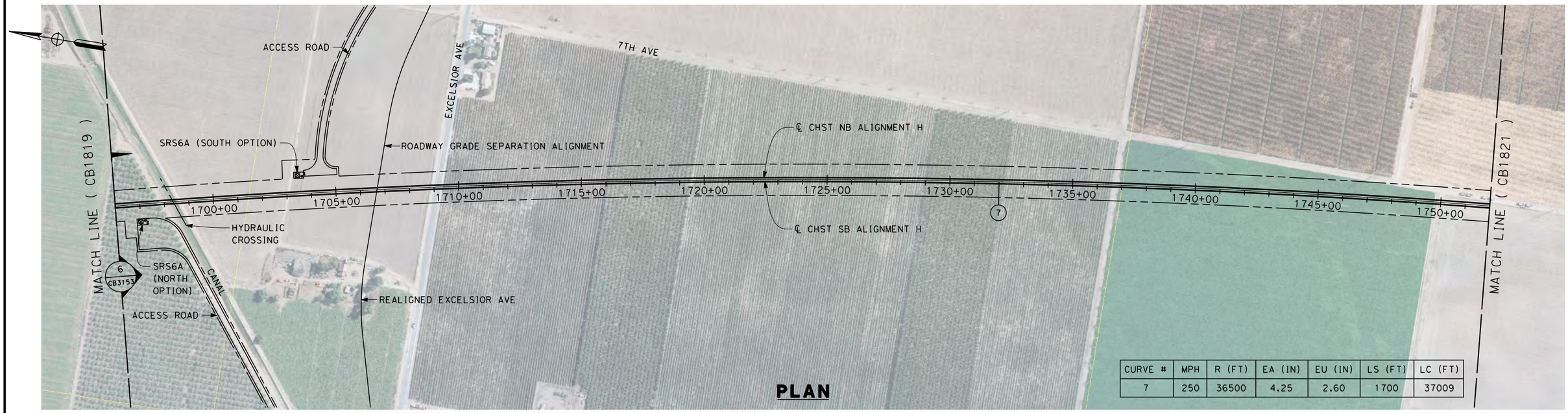


| CURVE # | MPH | R (FT) | EA (IN) | EU (IN) | LS (FT) | LC (FT) |
|---|---|---|---|---|---|---|
| 7 | 250 | 36500 | 4.25 | 2.60 | 1700 | 37009 |

**PLAN**

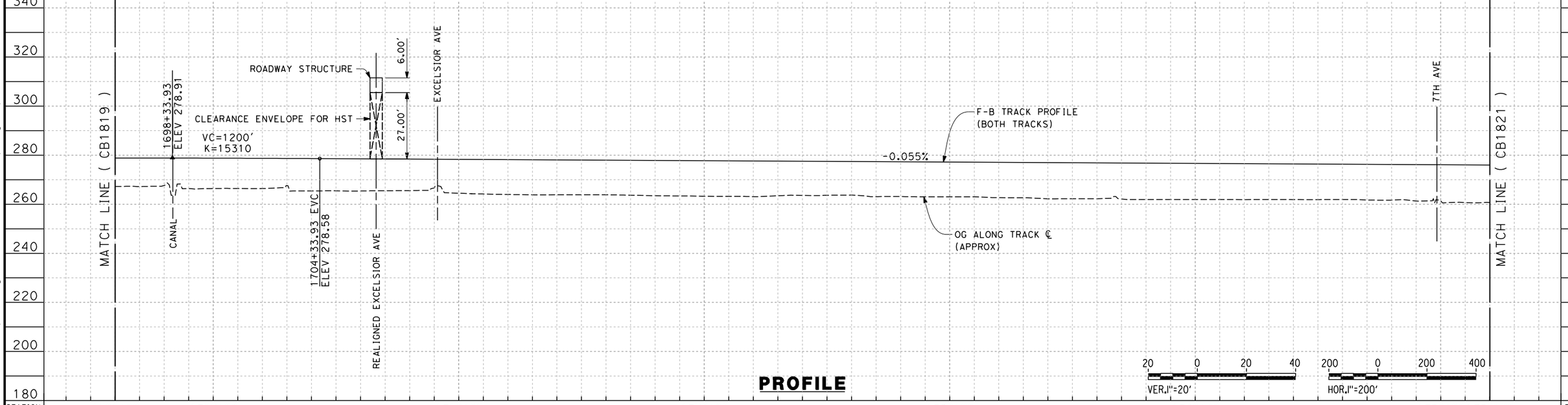


**PROFILE**

| STATION | 1696+00 | 1700+00 | 1710+00 | 1720+00 | 1730+00 | 1740+00 | 1750+00 | 1752+00 | TOTAL |
|---|---|---|---|---|---|---|---|---|---|
| CY Exc | | | | | | | | | |
| CY Emb | | | | | | | | | |

| REV | DATE | BY | CHK | APP | DESCRIPTION |
|---|---|---|---|---|---|

DESIGNED BY A. POLING
DRAWN BY J. BORGHESI
CHECKED BY K. SEYMOUR
IN CHARGE R.COFFIN
DATE 12/31/13

**RECORD SET 15% DESIGN SUBMISSION - NOT FOR CONSTRUCTION**

URS | HMM | ARUP
California High-Speed Train

CALIFORNIA HIGH-SPEED RAIL AUTHORITY

# CALIFORNIA HIGH-SPEED TRAIN PROJECT
# FRESNO TO BAKERSFIELD

HANFORD SUBSECTION
ALIGNMENT H
STA. 1696+00 TO 1752+00
PLAN AND PROFILE

CONTRACT NO. HSR 06-0003
DRAWING NO. CB1820
SCALE AS SHOWN
SHEET NO. 14 OF 31

04/02/2014 - RFP No.: HSR 13-57

alexander.poling 12/10/2013 5:27:50 PM c:\pwworking\hmm\external\alexander.poling-arup.com\d0125343\FB-CB-1820-H.dgn

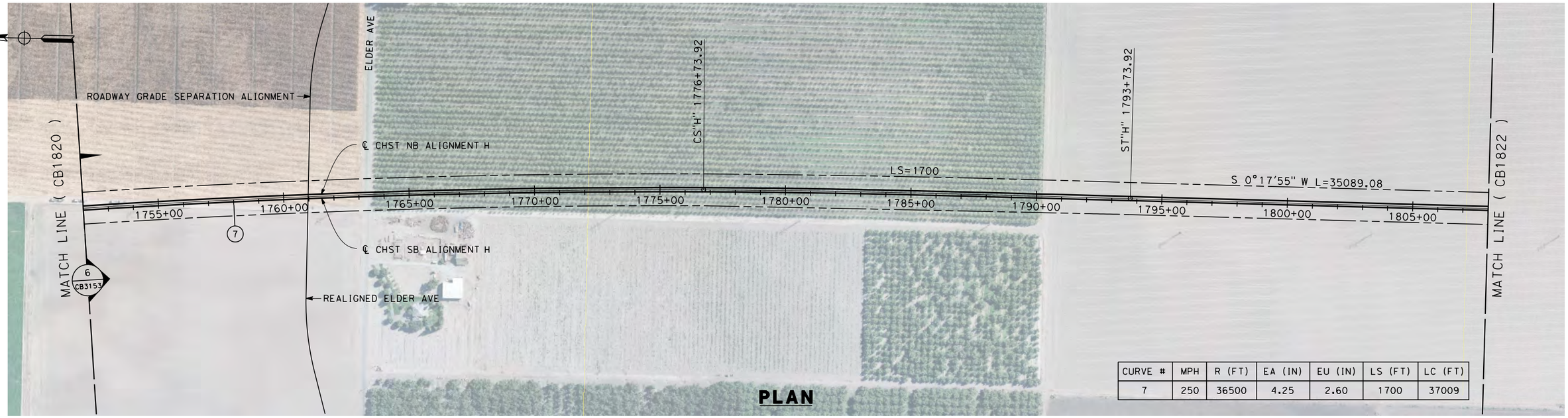


| CURVE # | MPH | R (FT) | EA (IN) | EU (IN) | LS (FT) | LC (FT) |
|---|---|---|---|---|---|---|
| 7 | 250 | 36500 | 4.25 | 2.60 | 1700 | 37009 |

**PLAN**

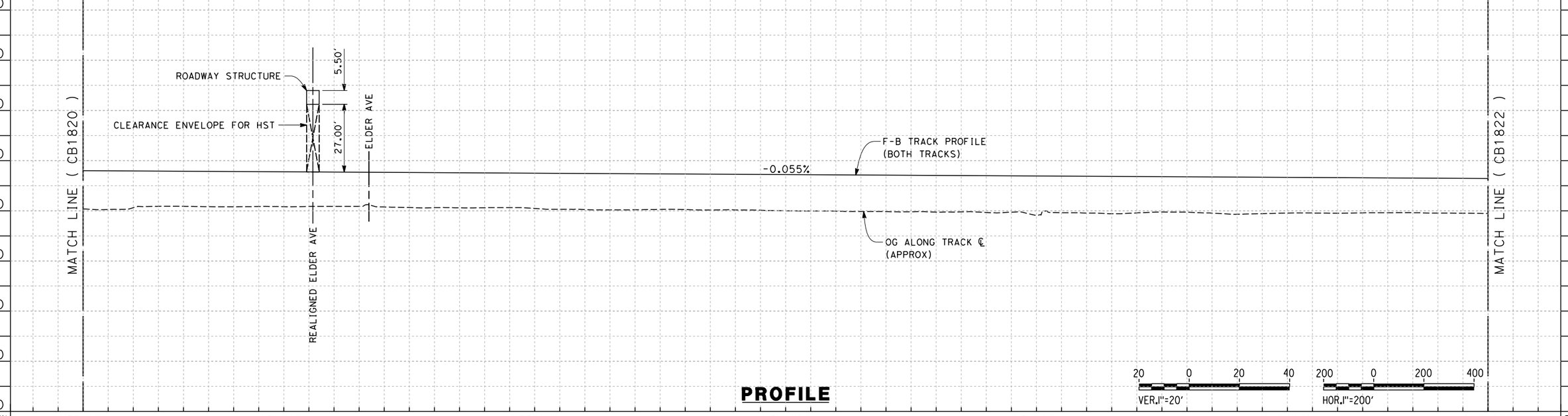


**PROFILE**

| REV | DATE | BY | CHK | APP | DESCRIPTION |
|---|---|---|---|---|---|
| | | | | | |

DESIGNED BY A. POLING
DRAWN BY J. BORGHESI
CHECKED BY K. SEYMOUR
IN CHARGE R. COFFIN
DATE 12/31/13

**RECORD SET 15% DESIGN SUBMISSION - NOT FOR CONSTRUCTION**

URS | HMM | ARUP

CALIFORNIA HIGH-SPEED RAIL AUTHORITY

# CALIFORNIA HIGH-SPEED TRAIN PROJECT
# FRESNO TO BAKERSFIELD

HANFORD SUBSECTION
ALIGNMENT H
STA. 1752+00 TO 1808+00
PLAN AND PROFILE

CONTRACT NO. HSR 06-0003
DRAWING NO. CB1821
SCALE AS SHOWN
SHEET NO. 15 OF 31

04/02/2014 - RFP No.: HSR 13-57

alexander.poling 12/10/2013 5:28:46 PM c:\pwworking\hmm\external\alexander.poling-arup.com\d0125343\FB-CB-1821-H.dgn

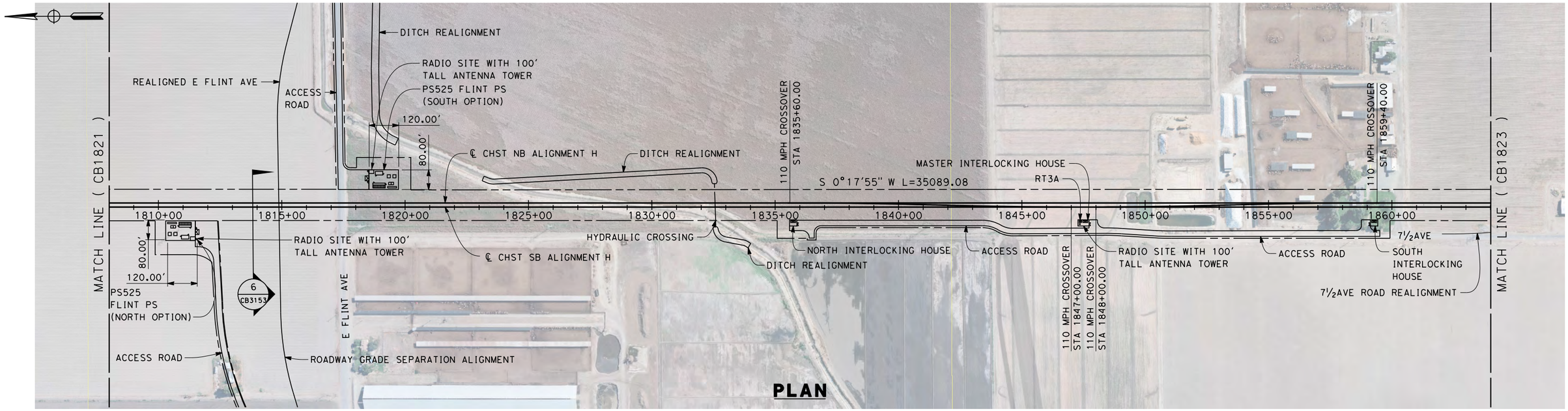





| REV | DATE | BY | CHK | APP | DESCRIPTION |
|---|---|---|---|---|---|
| | | | | | |

DESIGNED BY A. POLING
DRAWN BY J. BORGHESI
CHECKED BY K. SEYMOUR
IN CHARGE R.COFFIN
DATE 12/31/13

**RECORD SET 15% DESIGN SUBMISSION - NOT FOR CONSTRUCTION**

URS | HMM | ARUP
CALIFORNIA HIGH-SPEED TRAIN

CALIFORNIA HIGH-SPEED RAIL AUTHORITY

# CALIFORNIA HIGH-SPEED TRAIN PROJECT
# FRESNO TO BAKERSFIELD
HANFORD SUBSECTION
ALIGNMENT H
STA. 1808+00 TO 1864+00
PLAN AND PROFILE

CONTRACT NO. HSR 06-0003
DRAWING NO. CB1822
SCALE AS SHOWN
SHEET NO. 16 OF 31

04/02/2014 - RFP No.: HSR 13-57

12/20/2013 5:23:40 PM c:\pwworking\hmm\external\paul.tonkin01-arup.com\d0125343\FB-CB-1822-H.dgn paul.tonkin

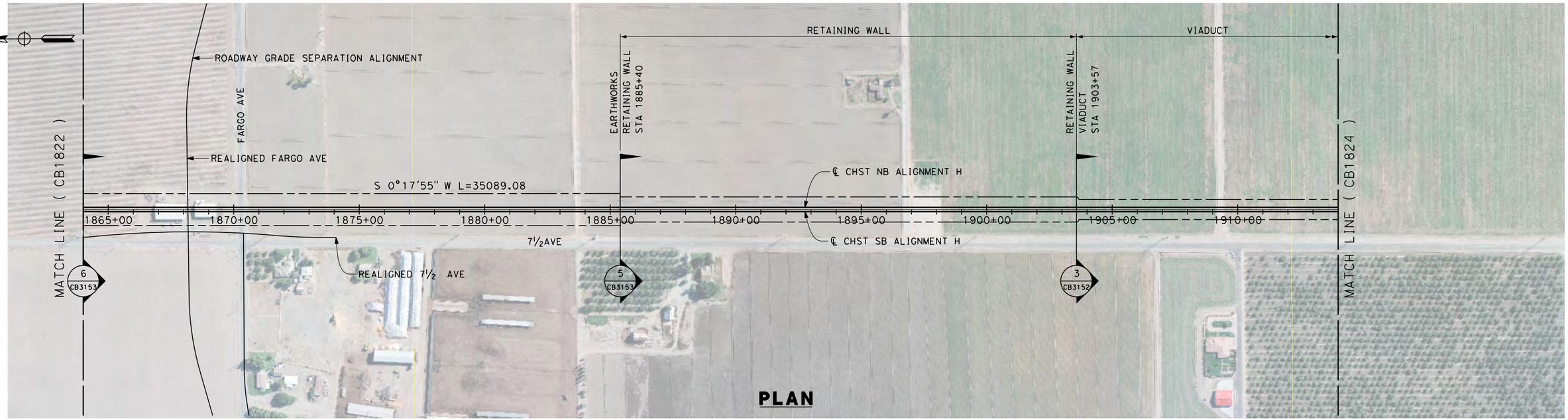


**PLAN**

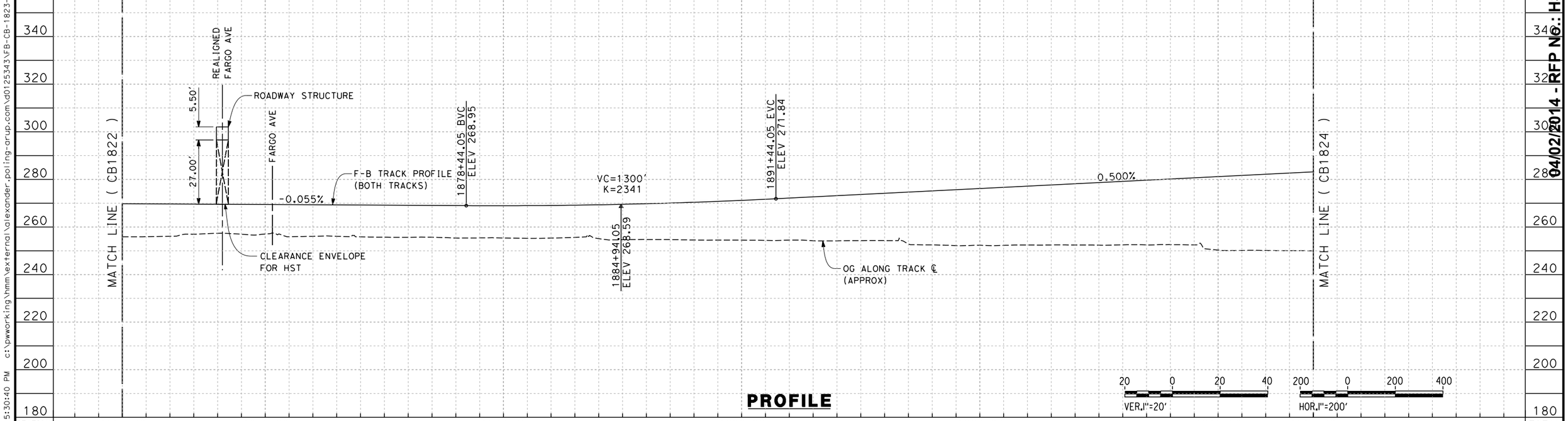


**PROFILE**

| STATION | 1864+00 | 1870+00 | 1880+00 | 1890+00 | 1900+00 | 1910+00 | 1914+00 | TOTAL |
|---|---|---|---|---|---|---|---|---|
| CY Exc | | | | | | | | |
| CY Emb | | | | | | | | |

| REV | DATE | BY | CHK | APP | DESCRIPTION |
|---|---|---|---|---|---|

DESIGNED BY A. POLING
DRAWN BY J. BORGHESI
CHECKED BY K. SEYMOUR
IN CHARGE R.COFFIN
DATE 12/31/13

**RECORD SET 15% DESIGN SUBMISSION - NOT FOR CONSTRUCTION**

URS | HMM | ARUP
California High-Speed Train

CALIFORNIA HIGH-SPEED RAIL AUTHORITY

# CALIFORNIA HIGH-SPEED TRAIN PROJECT
# FRESNO TO BAKERSFIELD
HANFORD SUBSECTION
ALIGNMENT H
STA. 1864+00 TO 1914+00
PLAN AND PROFILE

CONTRACT NO. HSR 06-0003
DRAWING NO. CB1823
SCALE AS SHOWN
SHEET NO. 17 OF 31

RFP No.: HSR 13-57
04/02/2014

alexander.poling 12/10/2013 5:30:40 PM c:\pwworking\hmm\external\alexander.poling-arup.com\d0125343\VB-CB-1823-H.dgn

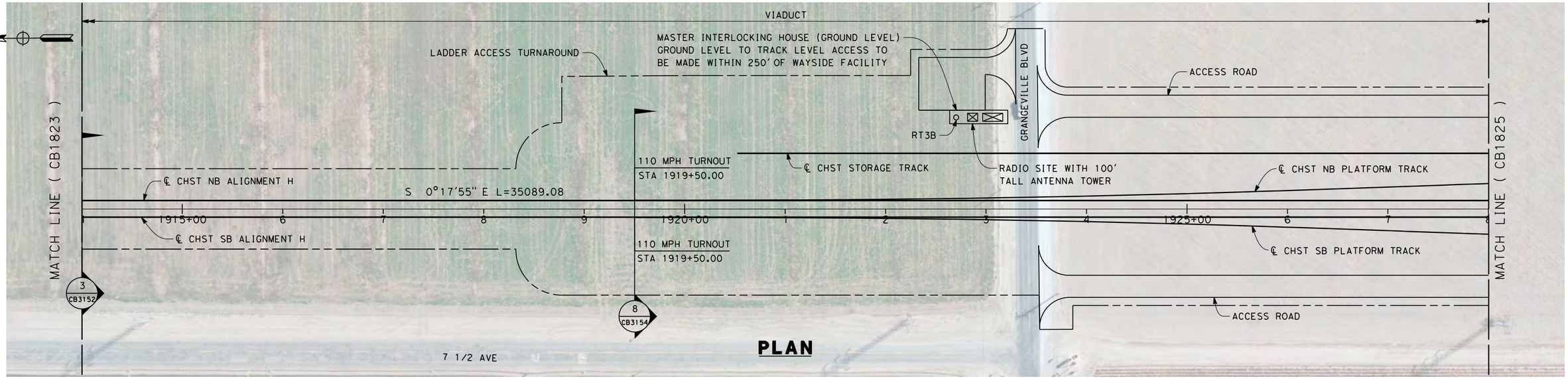


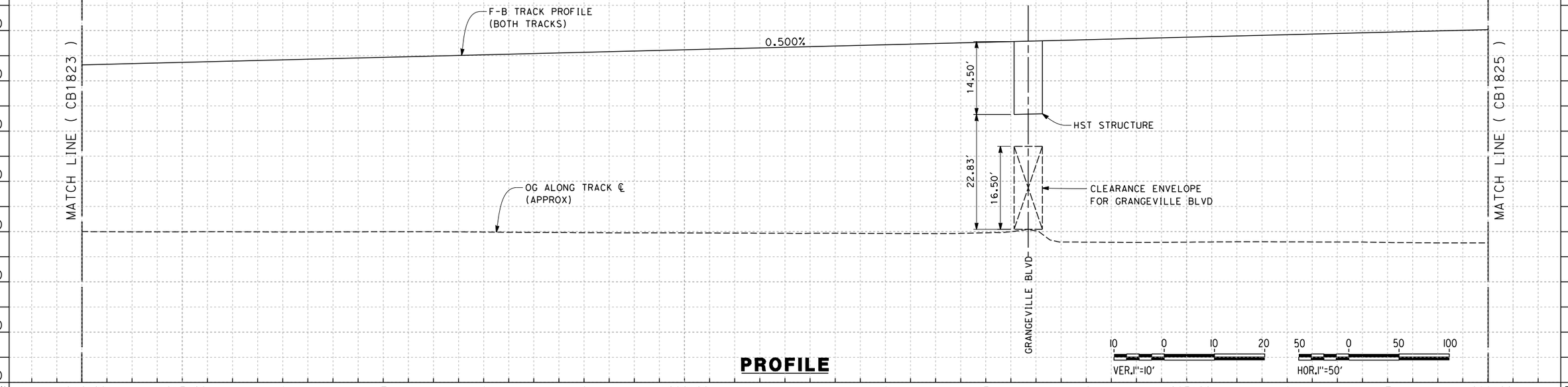


| REV | DATE | BY | CHK | APP | DESCRIPTION |
|---|---|---|---|---|---|

DESIGNED BY A. POLING
DRAWN BY J. BORGHESI
CHECKED BY K. SEYMOUR
IN CHARGE R.COFFIN
DATE 12/31/13

**RECORD SET 15% DESIGN SUBMISSION - NOT FOR CONSTRUCTION**

URS | HMM | ARUP
California High-Speed Train

CALIFORNIA
HIGH-SPEED RAIL AUTHORITY

# CALIFORNIA HIGH-SPEED TRAIN PROJECT
# FRESNO TO BAKERSFIELD
HANFORD SUBSECTION
ALIGNMENT H
STA. 1914+00 TO 1928+00
PLAN AND PROFILE

CONTRACT NO. HSR 06-0003
DRAWING NO. CB1824
SCALE AS SHOWN
SHEET NO. 18 OF 31

04/02/2014 - RFP No.: HSR 13-57

alexander.poling 12/10/2013 5:31:07 PM c:\pwworking\hmm\external\alexander.poling-arup.com\d0125343\FB-CB-1824-H.dgn

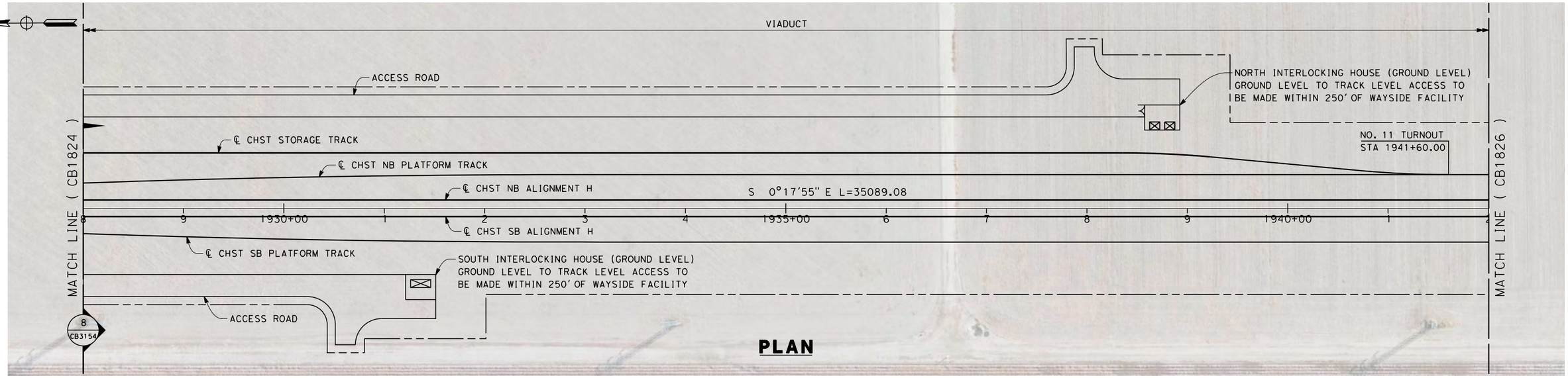


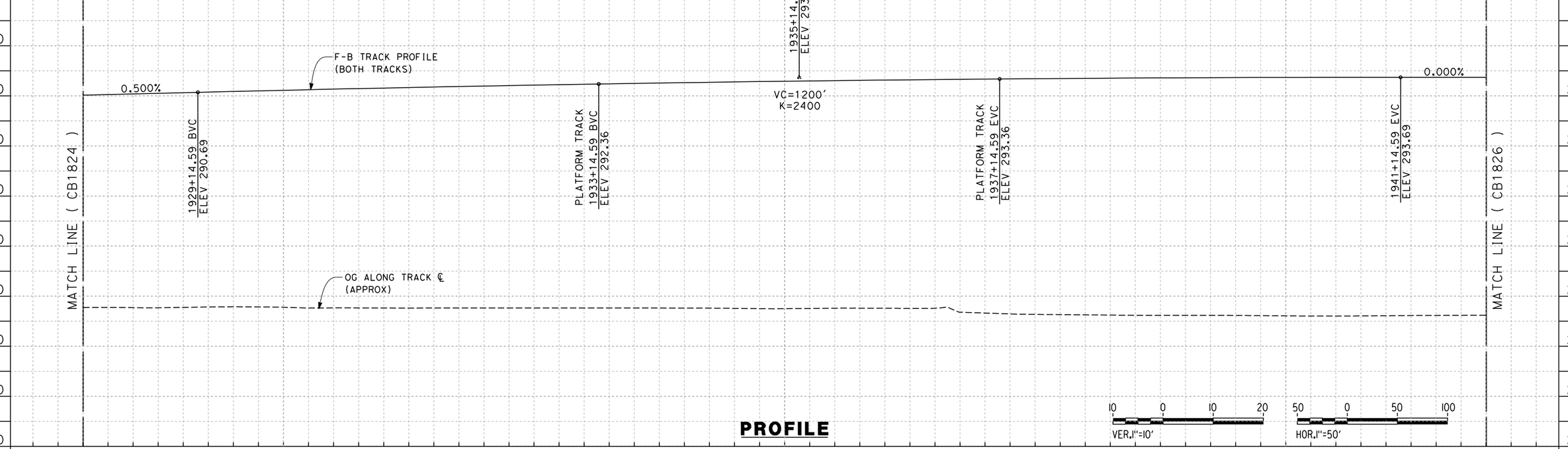


| REV | DATE | BY | CHK | APP | DESCRIPTION |
|---|---|---|---|---|---|
| | | | | | |

DESIGNED BY A. POLING
DRAWN BY J. BORGHESI
CHECKED BY K. SEYMOUR
IN CHARGE R.COFFIN
DATE 12/31/13

**RECORD SET 15% DESIGN SUBMISSION - NOT FOR CONSTRUCTION**

URS | HMM | ARUP
California High-Speed Train

CALIFORNIA HIGH-SPEED RAIL AUTHORITY

# CALIFORNIA HIGH-SPEED TRAIN PROJECT
# FRESNO TO BAKERSFIELD
HANFORD SUBSECTION
ALIGNMENT H
STA. 1928+00 TO 1942+00
PLAN AND PROFILE

CONTRACT NO. HSR 06-0003
DRAWING NO. CB1825
SCALE AS SHOWN
SHEET NO. 19 OF 31

04/02/2014 - RFP No.: HSR 13-57

alexander.poling 12/10/2013 5:31:40 PM c:\pwworking\hmm\external\alexander.poling-arup.com\d0125343\FB-CB-1825-H.dgn

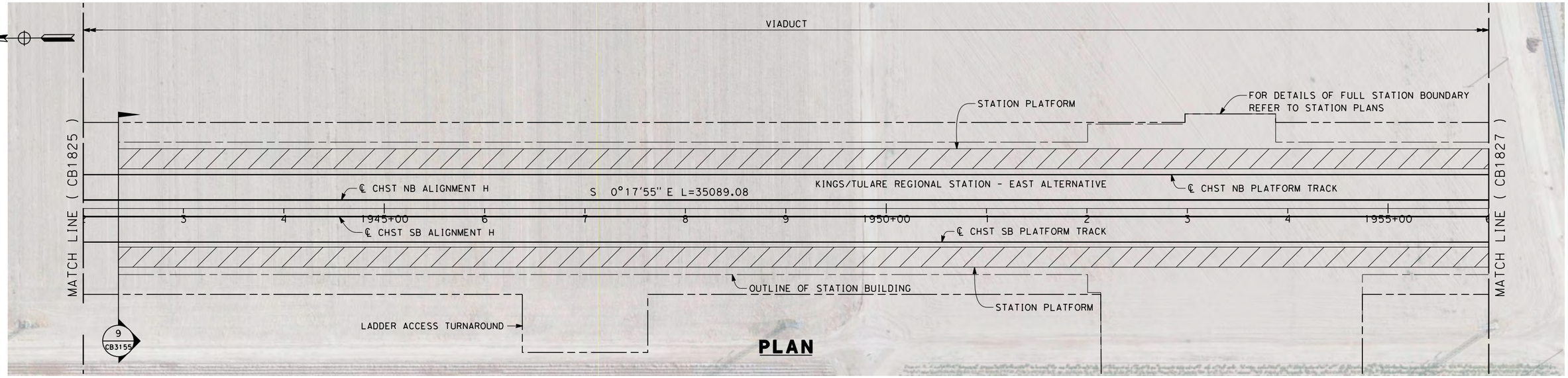


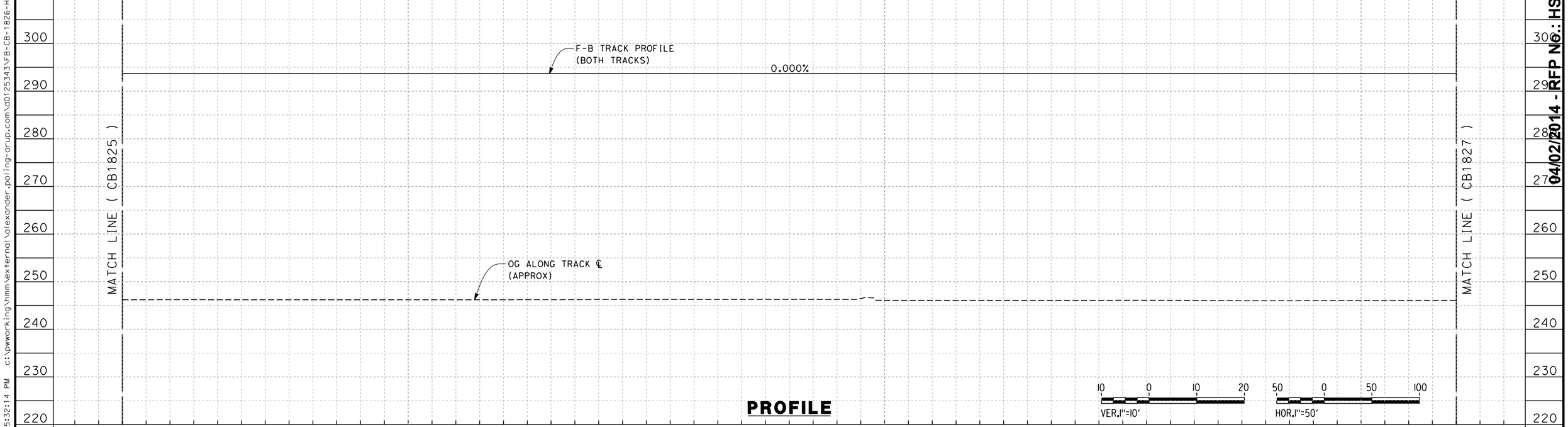


| REV | DATE | BY | CHK | APP | DESCRIPTION |
|---|---|---|---|---|---|

DESIGNED BY A. POLING
DRAWN BY J. BORGHESI
CHECKED BY K. SEYMOUR
IN CHARGE R. COFFIN
DATE 12/31/13

**RECORD SET 15% DESIGN SUBMISSION - NOT FOR CONSTRUCTION**

URS | HMM | ARUP
CALIFORNIA HIGH-SPEED TRAIN

CALIFORNIA HIGH-SPEED RAIL AUTHORITY

# CALIFORNIA HIGH-SPEED TRAIN PROJECT
# FRESNO TO BAKERSFIELD

HANFORD SUBSECTION
ALIGNMENT H
STA. 1942+00 TO 1956+00
PLAN AND PROFILE

CONTRACT NO. HSR 06-0003
DRAWING NO. CB1826
SCALE AS SHOWN
SHEET NO. 20 OF 31

04/02/2014 - RFP No.: HSR 13-57

c:\pwworking\hmm\external\alexander.poling-arup.com\d0125343\FB-CB-1826-H.dgn
alexander.poling 12/10/2013 5:32:14 PM

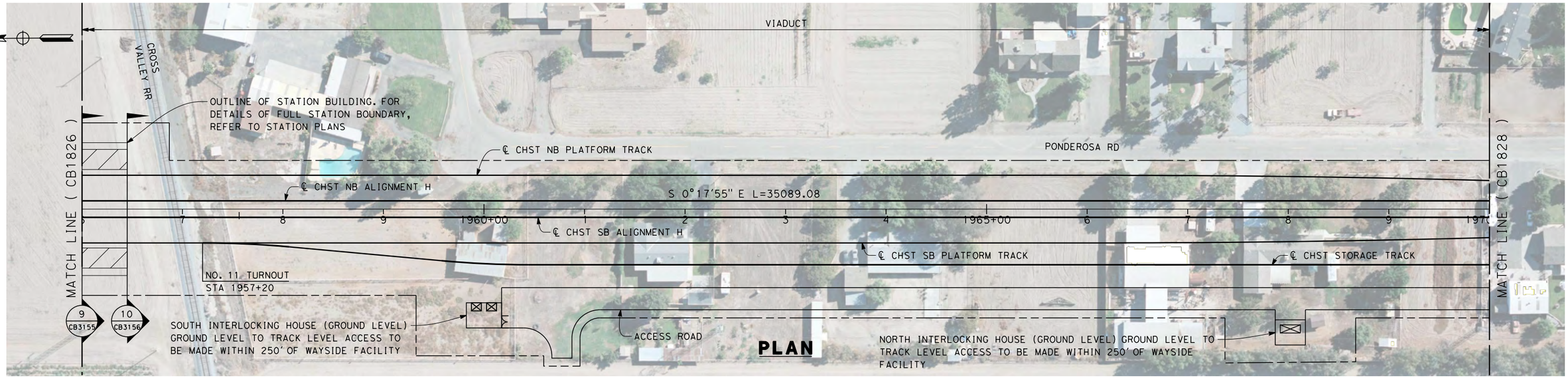


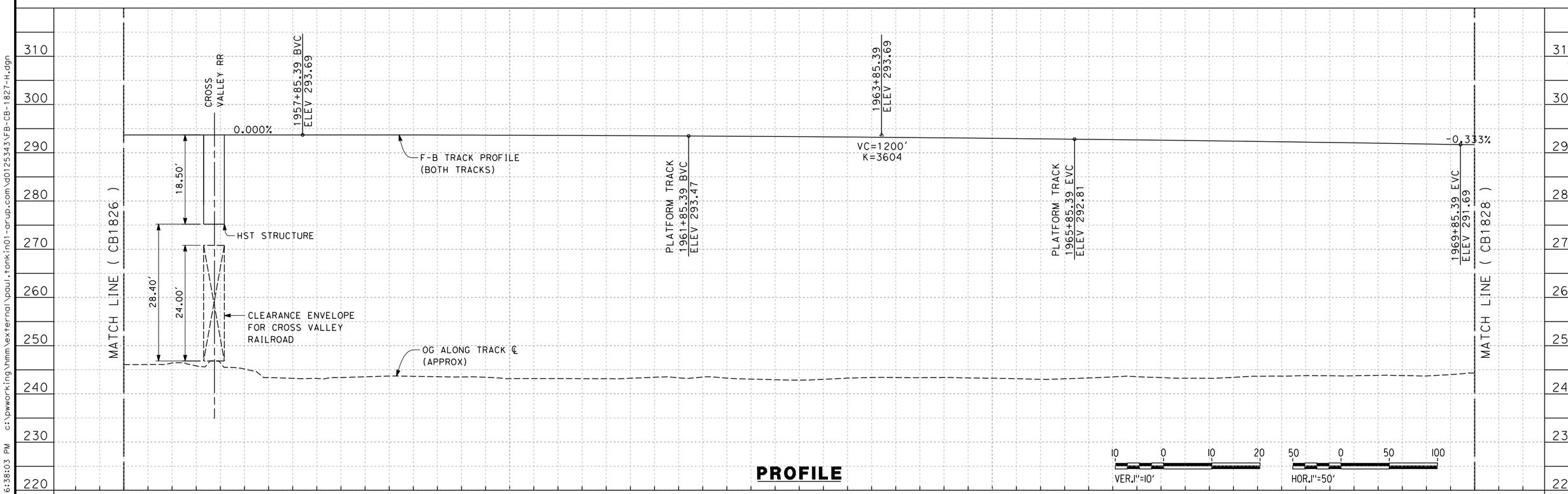


| STATION | 1956+00 | 7 | 8 | 9 | 1960+00 | 1 | 2 | 3 | 4 | 1965+00 | 6 | 7 | 8 | 9 | 1970+00 | TOTAL |
|---|---|---|---|---|---|---|---|---|---|---|---|---|---|---|---|---|
| CY Exc | | | | | | | | | | | | | | | | |
| CY Emb | | | | | | | | | | | | | | | | |

| REV | DATE | BY | CHK | APP | DESCRIPTION |
|---|---|---|---|---|---|

DESIGNED BY A. POLING
DRAWN BY J. BORGHESI
CHECKED BY K. SEYMOUR
IN CHARGE R. COFFIN
DATE 12/31/13

**RECORD SET 15% DESIGN SUBMISSION - NOT FOR CONSTRUCTION**

URS | HMM | ARUP
CALIFORNIA HIGH-SPEED TRAIN

CALIFORNIA HIGH-SPEED RAIL AUTHORITY

# CALIFORNIA HIGH-SPEED TRAIN PROJECT
# FRESNO TO BAKERSFIELD
HANFORD SUBSECTION
ALIGNMENT H
STA. 1956+00 TO 1970+00
PLAN AND PROFILE

CONTRACT NO. HSR 06-0003
DRAWING NO. CB1827
SCALE AS SHOWN
SHEET NO. 21 OF 31

RFP NO.: HSR 13-57
04/02/2014

12/12/2013 6:38:03 PM c:\pwworking\hmm\external\paul.tonkin01-arup.com\d0125343\FB-CB-1827-H.dgn paul.tonkin

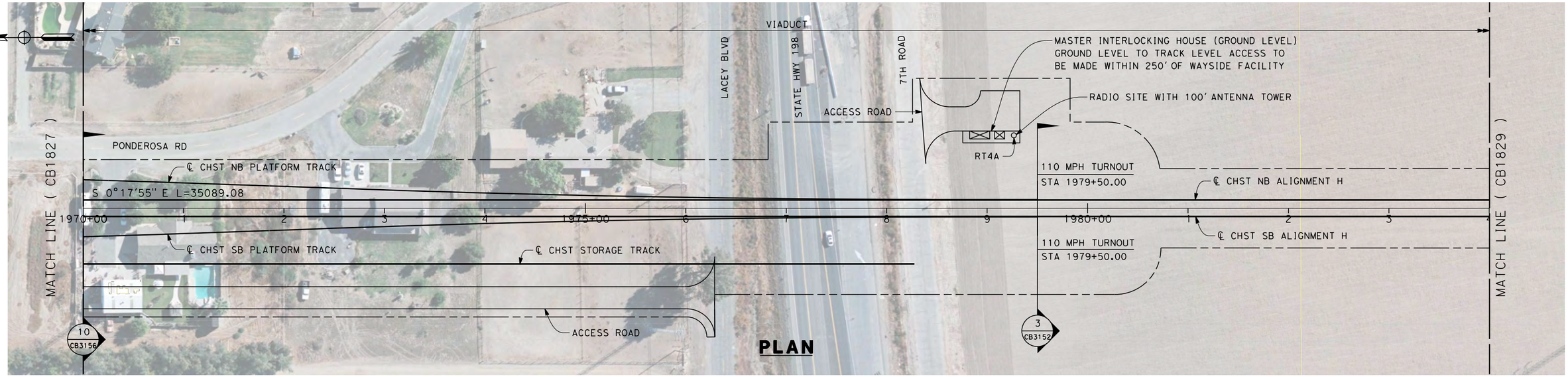


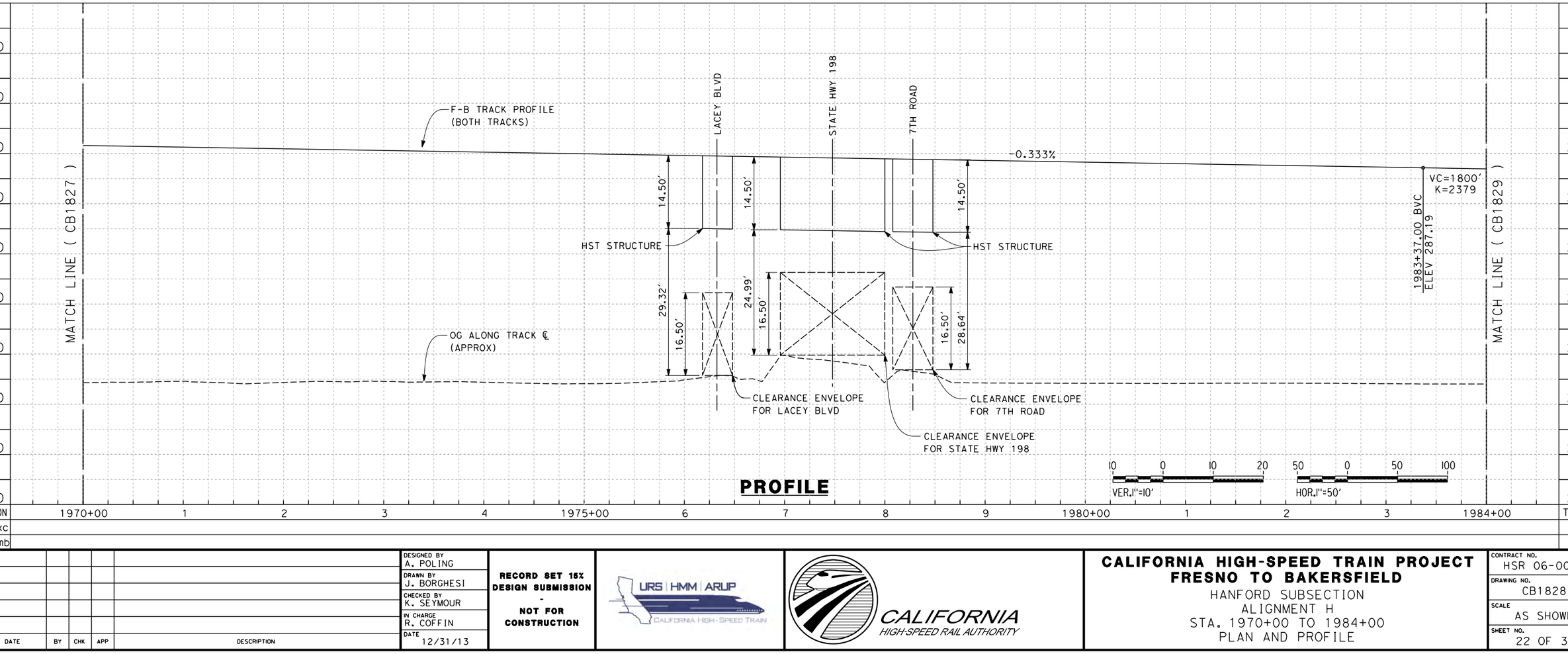


| REV | DATE | BY | CHK | APP | DESCRIPTION |
|---|---|---|---|---|---|
| | | | | | |

DESIGNED BY A. POLING
DRAWN BY J. BORGHESI
CHECKED BY K. SEYMOUR
IN CHARGE R. COFFIN
DATE 12/31/13

**RECORD SET 15% DESIGN SUBMISSION - NOT FOR CONSTRUCTION**

URS | HMM | ARUP
CALIFORNIA HIGH-SPEED TRAIN

CALIFORNIA
HIGH-SPEED RAIL AUTHORITY

# CALIFORNIA HIGH-SPEED TRAIN PROJECT
# FRESNO TO BAKERSFIELD

HANFORD SUBSECTION
ALIGNMENT H
STA. 1970+00 TO 1984+00
PLAN AND PROFILE

CONTRACT NO. HSR 06-0003
DRAWING NO. CB1828
SCALE AS SHOWN
SHEET NO. 22 OF 31

04/02/2014 - RFP No.: HSR 13-57

12/12/2013 6:41:44 PM c:\pwworking\hmm\external\paul.tonkin01-arup.com\d0125343\FB-CB-1828-H.dgn
paul.tonkin

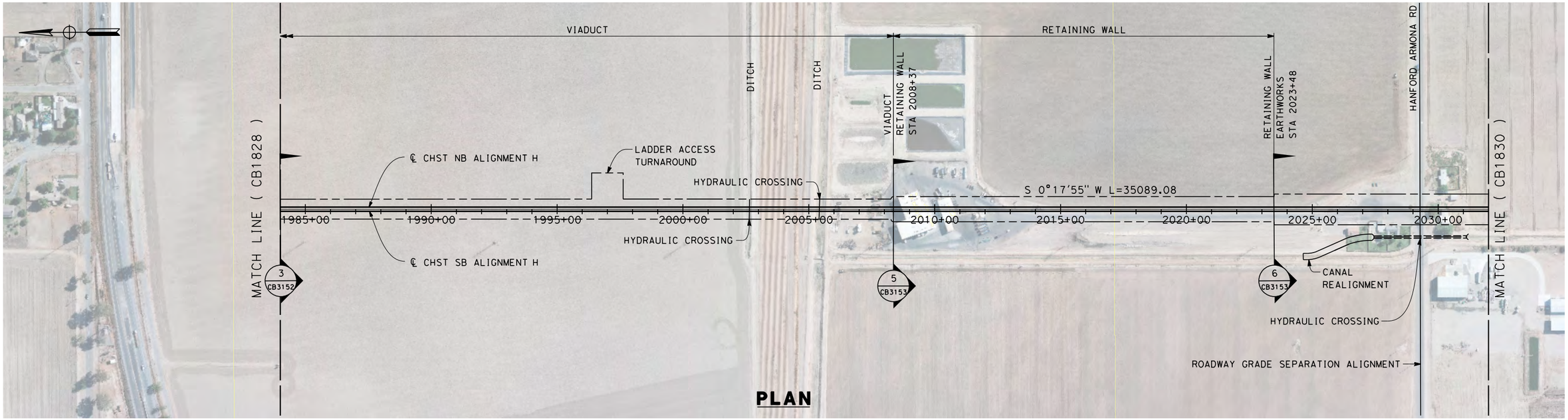


**PLAN**

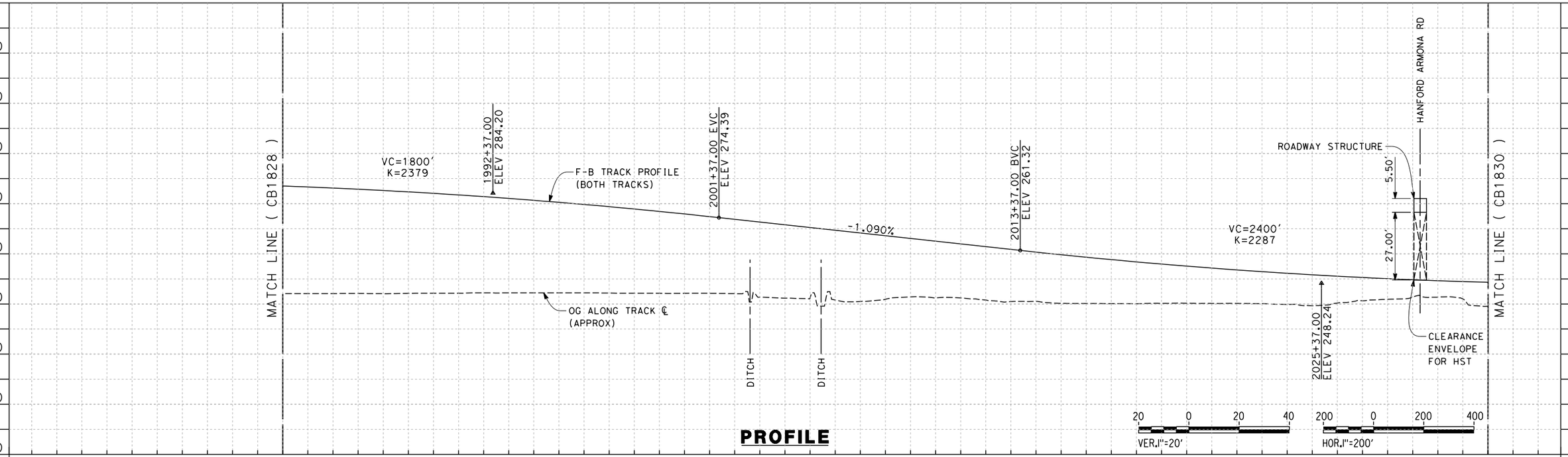


**PROFILE**

| STATION | 1984+00 | 1990+00 | 2000+00 | 2010+00 | 2020+00 | 2030+00 | 2032+00 | TOTAL |
|---|---|---|---|---|---|---|---|---|
| CY Exc | | | | | | | | |
| CY Emb | | | | | | | | |

| REV | DATE | BY | CHK | APP | DESCRIPTION |
|---|---|---|---|---|---|

DESIGNED BY A. POLING
DRAWN BY J. BORGHESI
CHECKED BY K. SEYMOUR
IN CHARGE R. COFFIN
DATE 12/31/13

**RECORD SET 15% DESIGN SUBMISSION - NOT FOR CONSTRUCTION**

URS | HMM | ARUP
California High-Speed Train

CALIFORNIA HIGH-SPEED RAIL AUTHORITY

# CALIFORNIA HIGH-SPEED TRAIN PROJECT
# FRESNO TO BAKERSFIELD

HANFORD SUBSECTION
ALIGNMENT H
STA. 1984+00 TO 2032+00
PLAN AND PROFILE

CONTRACT NO. HSR 06-0003
DRAWING NO. CB1829
SCALE AS SHOWN
SHEET NO. 23 OF 31

04/02/2014 - RFP No.: HSR 13-57

alexander.poling 12/10/2013 5:34:16 PM c:\pwworking\hmm\external\alexander.poling-arup.com\d0125343\FB-CB-1829-H.dgn

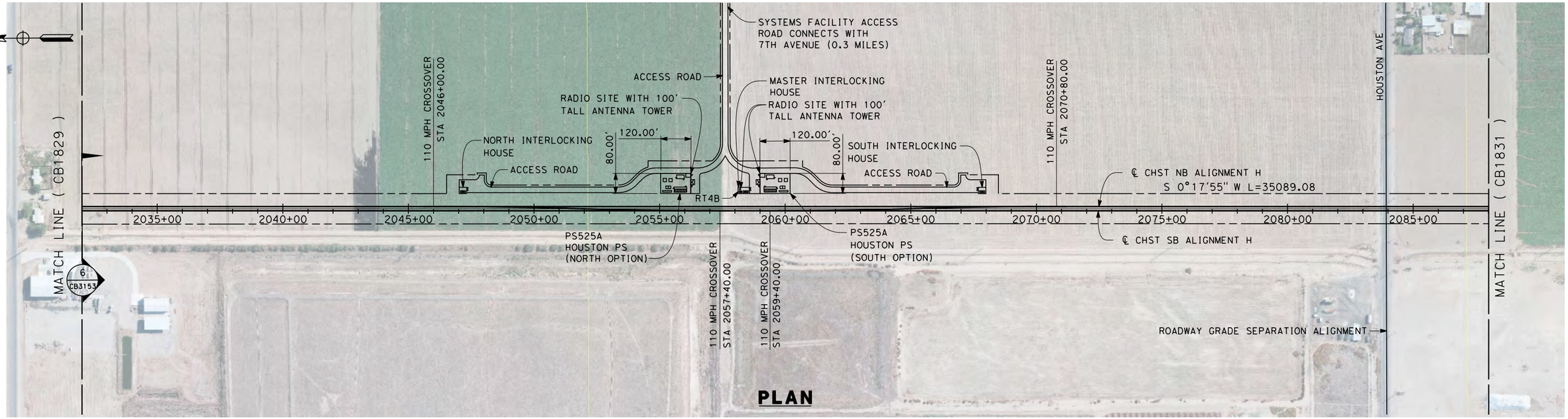


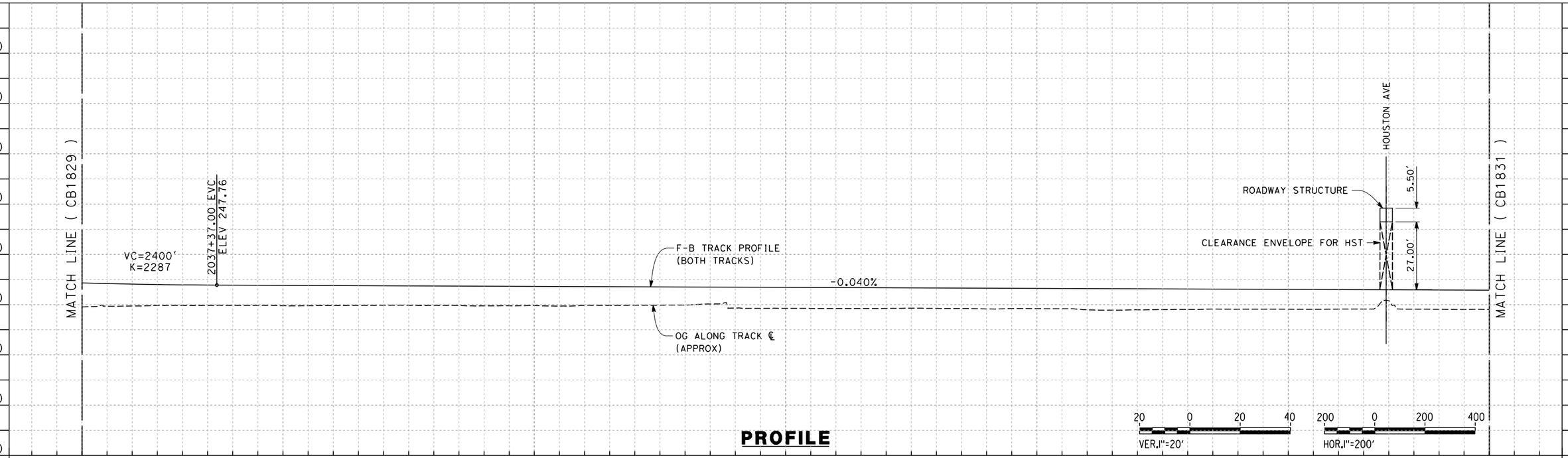


| REV | DATE | BY | CHK | APP | DESCRIPTION |
|---|---|---|---|---|---|

DESIGNED BY A. POLING
DRAWN BY J. BORGHESI
CHECKED BY K. SEYMOUR
IN CHARGE R. COFFIN
DATE 12/31/13

**RECORD SET 15% DESIGN SUBMISSION - NOT FOR CONSTRUCTION**

URS | HMM | ARUP
California High-Speed Train

CALIFORNIA HIGH-SPEED RAIL AUTHORITY

# CALIFORNIA HIGH-SPEED TRAIN PROJECT
# FRESNO TO BAKERSFIELD
HANFORD SUBSECTION
ALIGNMENT H
STA. 2032+00 TO 2088+00
PLAN AND PROFILE

CONTRACT NO. HSR 06-0003
DRAWING NO. CB1830
SCALE AS SHOWN
SHEET NO. 24 OF 31

04/02/2014 - RFP No.: HSR 13-57

alexander.poling 12/10/2013 5:35:14 PM c:\pwworking\hmm\external\alexander.poling-arup.com\d0125343\FB-CB-1830-H.dgn

**PLAN**

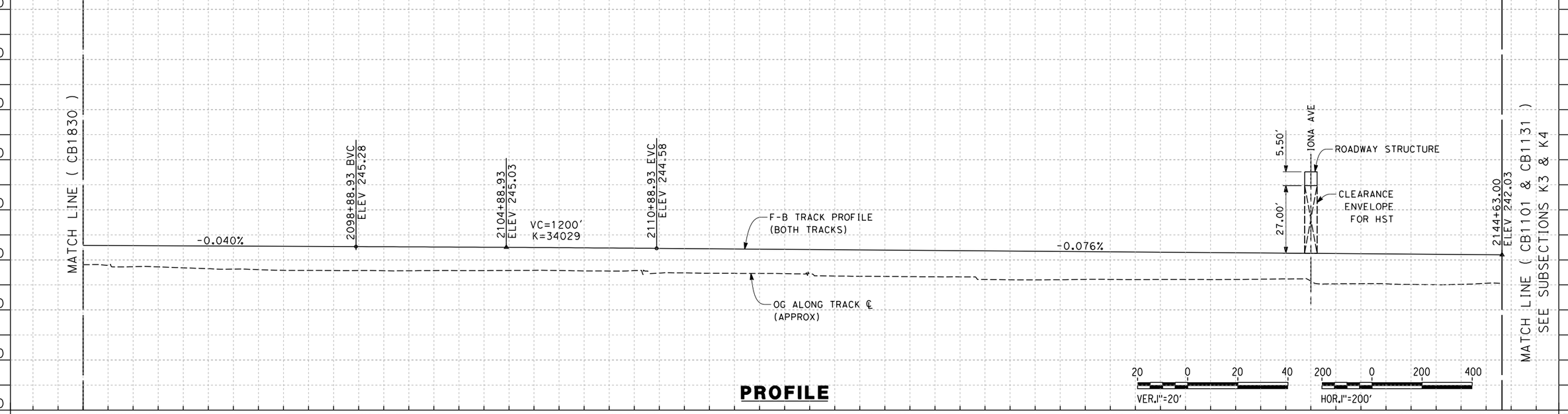


**PROFILE**

04/02/2014 - RFP No.: HSR 13-57

| REV | DATE | BY | CHK | APP | DESCRIPTION |
|---|---|---|---|---|---|

DESIGNED BY A. POLING
DRAWN BY J. BORGHESI
CHECKED BY K. SEYMOUR
IN CHARGE R. COFFIN
DATE 12/31/13

**RECORD SET 15% DESIGN SUBMISSION - NOT FOR CONSTRUCTION**

URS | HMM | ARUP
CALIFORNIA HIGH-SPEED TRAIN

CALIFORNIA HIGH-SPEED RAIL AUTHORITY

# CALIFORNIA HIGH-SPEED TRAIN PROJECT
# FRESNO TO BAKERSFIELD

HANFORD SUBSECTION
ALIGNMENT H
STA. 2088+00 TO 2144+63
PLAN AND PROFILE

CONTRACT NO. HSR 06-0003
DRAWING NO. CB1831
SCALE AS SHOWN
SHEET NO. 25 OF 31

alexander.poling 12/10/2013 5:36:14 PM c:\pwworking\hmm\external\alexander.poling-arup.com\d0125343\FB-CB-1831-H.dgn

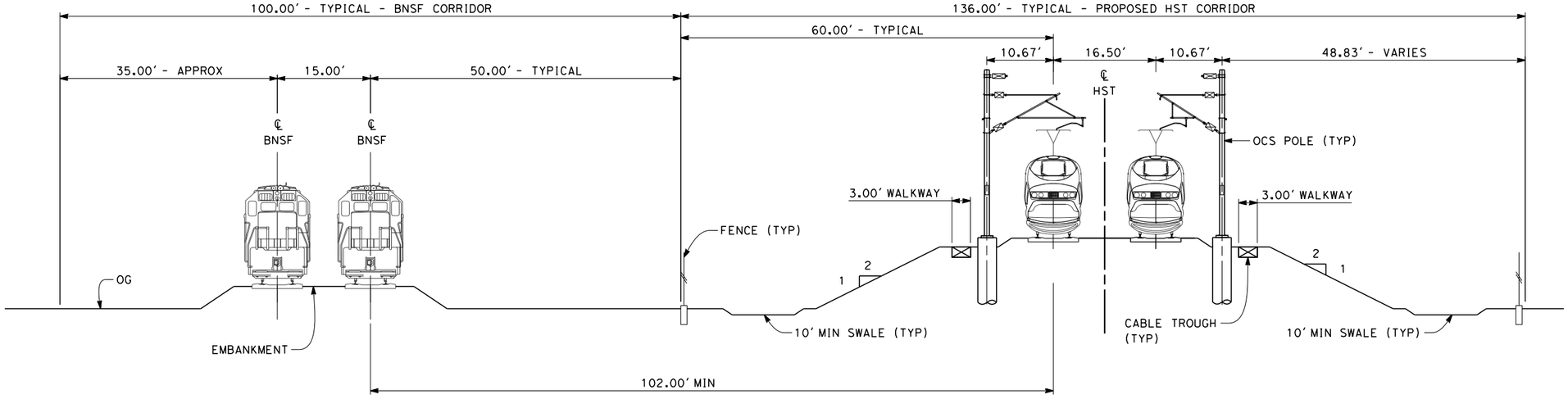


## SECTION 1

TWIN TRACK ADJACENT TO EXISTING BNSF - EMBANKMENT WITH OPEN DRAINAGE
STA 1065+07 THROUGH STA 1086+00

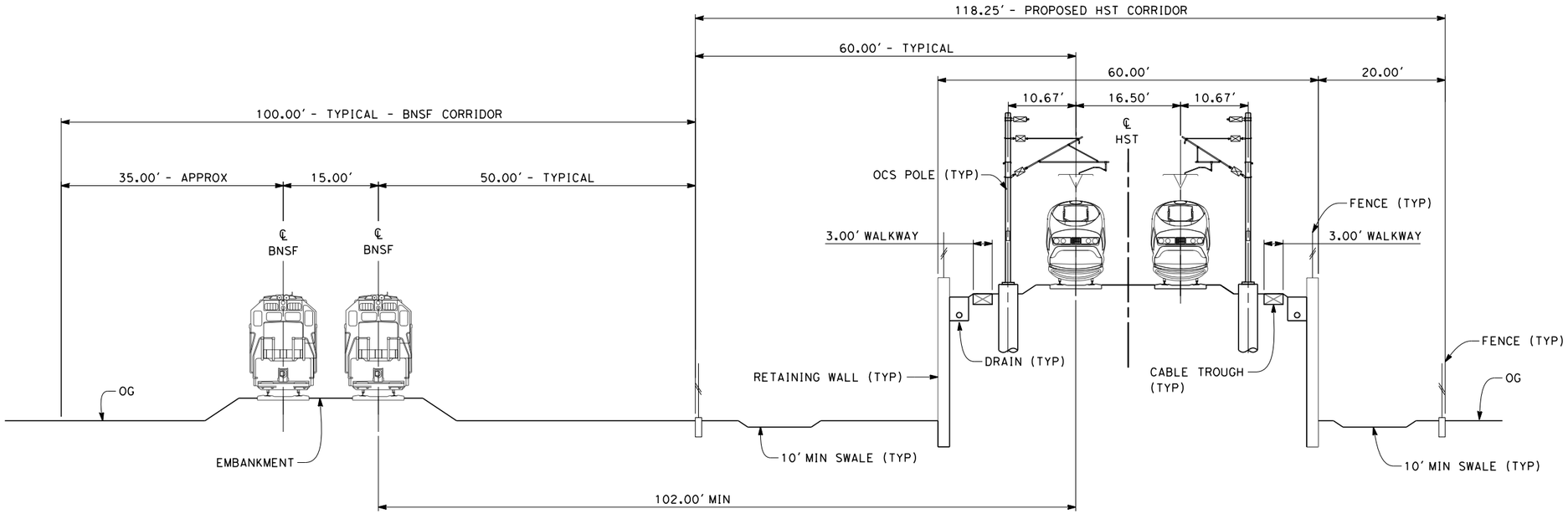


## SECTION 2

TWIN TRACK ADJACENT TO EXISTING BNSF - RETAINED EMBANKMENT WITH OPEN DRAINAGE
STA 1086+00 THROUGH STA 1105+70

10 0 10 20
1"=10'

NOTES:

1. TRACKFORM SHOWN IS INDICATIVE
2. SUPERELEVATION IS NOT SHOWN IN CROSS SECTIONS. FOR DETAILS OF SUPERELEVATION SEE CURVE TABLES.

04/02/2014 - RFP No.: HSR 13-57

| REV | DATE | BY | CHK | APP | DESCRIPTION |
|---|---|---|---|---|---|

DESIGNED BY A. POLING
DRAWN BY J. BORGHESI
CHECKED BY K. SEYMOUR
IN CHARGE R. COFFIN
DATE 12/31/13

RECORD SET 15% DESIGN SUBMISSION - NOT FOR CONSTRUCTION

URS | HMM | ARUP
CALIFORNIA HIGH-SPEED TRAIN

CALIFORNIA HIGH-SPEED RAIL AUTHORITY

**CALIFORNIA HIGH-SPEED TRAIN PROJECT**
**FRESNO TO BAKERSFIELD**
HANFORD SUBSECTION
ALIGNMENT H
TYPICAL SECTIONS

CONTRACT NO. HSR 06-0003
DRAWING NO. CB3151
SCALE AS SHOWN
SHEET NO. 26 OF 31

alexander.poling 12/10/2013 5:36:46 PM c:\pwworking\hmm\external\alexander.poling-arup.com\d0125343\FB-CB-3151-H.dgn

NOTES:

1. TRACKFORM SHOWN IS INDICATIVE
2. FOR STRUCTURE DIMENSIONS SEE STRUCTURAL CROSS SECTIONS
3. SUPERELEVATION IS NOT SHOWN IN CROSS SECTIONS. FOR DETAILS OF SUPERELEVATION SEE CURVE TABLES.

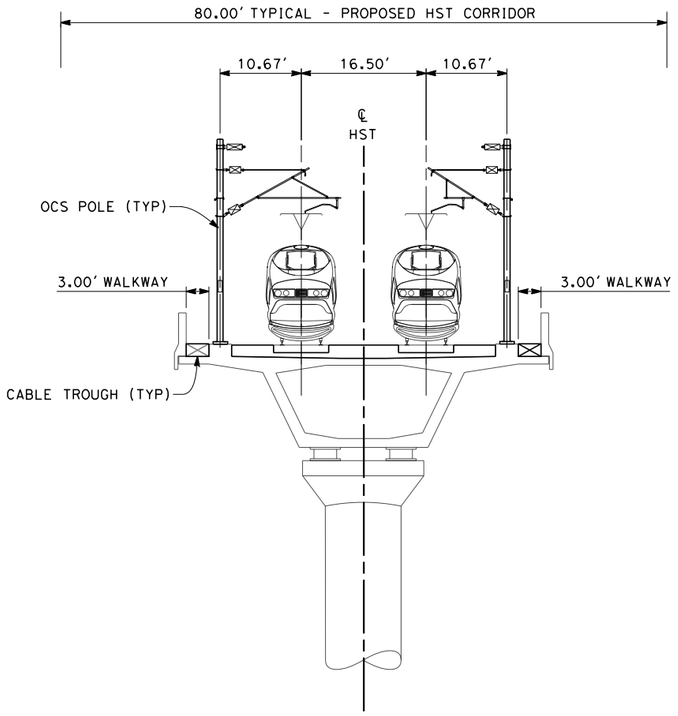


## SECTION 3

TWIN TRACK - AERIAL STRUCTURE
STA 1105+70 THROUGH STA 1120+30
STA 1134+60 THROUGH STA 1156+20
STA 1463+58 THROUGH STA 1464+80
STA 1466+97 THROUGH STA 1485+70
STA 1489+27 THROUGH STA 1518+30
STA 1525+44 THROUGH STA 1580+87
STA 1587+31 THROUGH STA 1593+34
STA 1903+57 THROUGH STA 1919+50
STA 1979+50 THROUGH STA 2008+37

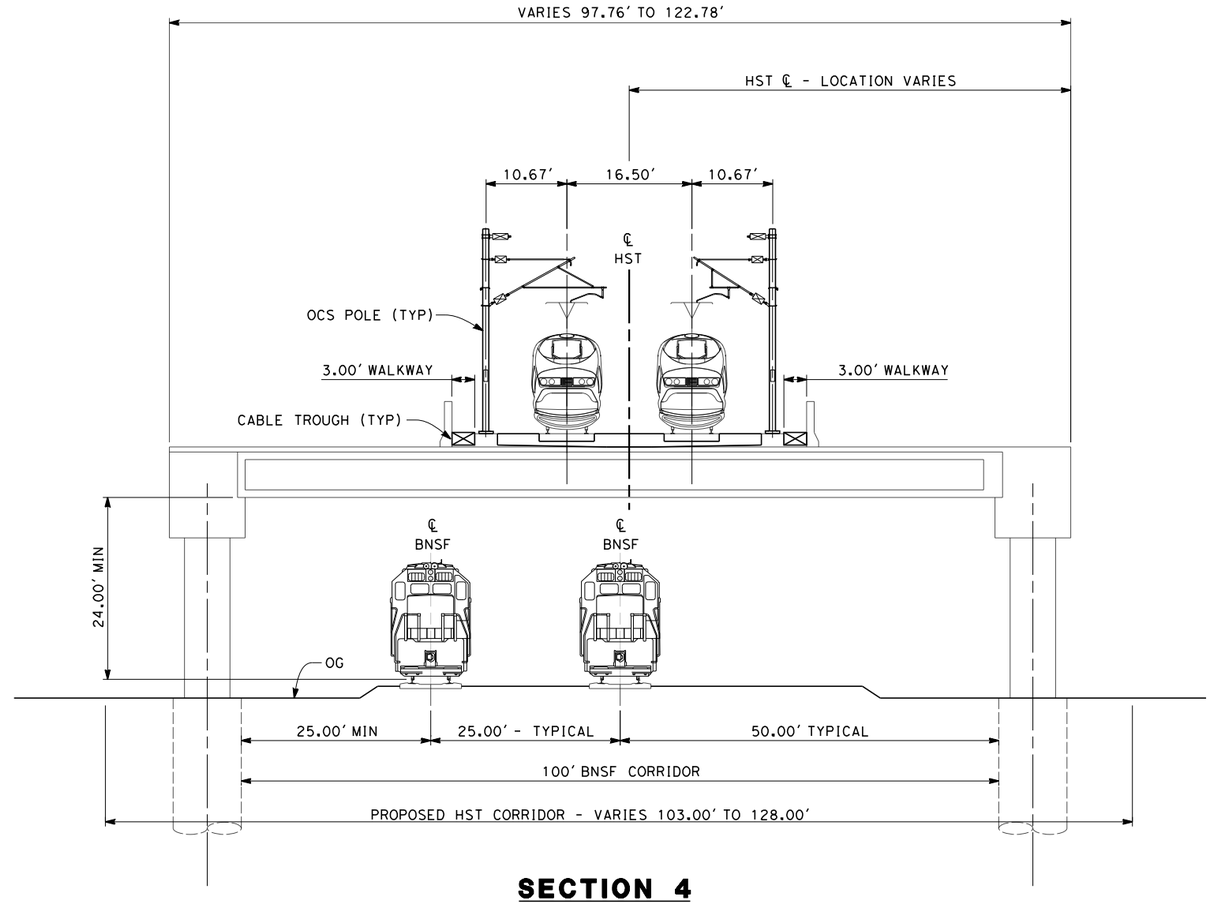


## SECTION 4

TWIN TRACK - ELEVATED SLAB OVER BNSF
STA 1120+30 THROUGH STA 1134+60

10 0 10 20
1"=10'

04/02/2014 - RFP No.: HSR 13-57

| REV | DATE | BY | CHK | APP | DESCRIPTION |
|---|---|---|---|---|---|

DESIGNED BY A. POLING
DRAWN BY J. BORGHESI
CHECKED BY K. SEYMOUR
IN CHARGE R. COFFIN
DATE 12/31/13

RECORD SET 15% DESIGN SUBMISSION - NOT FOR CONSTRUCTION

URS | HMM | ARUP
CALIFORNIA HIGH-SPEED TRAIN

CALIFORNIA HIGH-SPEED RAIL AUTHORITY

**CALIFORNIA HIGH-SPEED TRAIN PROJECT**
**FRESNO TO BAKERSFIELD**
HANFORD SUBSECTION
ALIGNMENT H
TYPICAL SECTIONS

CONTRACT NO. HSR 06-0003
DRAWING NO. CB3152
SCALE AS SHOWN
SHEET NO. 27 OF 31

paul.tonkin 12/23/2013 1:41:15 PM c:\pwworking\hmm\external\paul.tonkin01-arup.com\d0125343\VFB-CB-3152-H.dgn

NOTES:

1. TRACKFORM SHOWN IS INDICATIVE
2. FOR STRUCTURE DIMENSIONS SEE STRUCTURAL CROSS SECTIONS
3. SUPERELEVATION IS NOT SHOWN IN CROSS SECTIONS. FOR DETAILS OF SUPERELEVATION SEE CURVE TABLES.

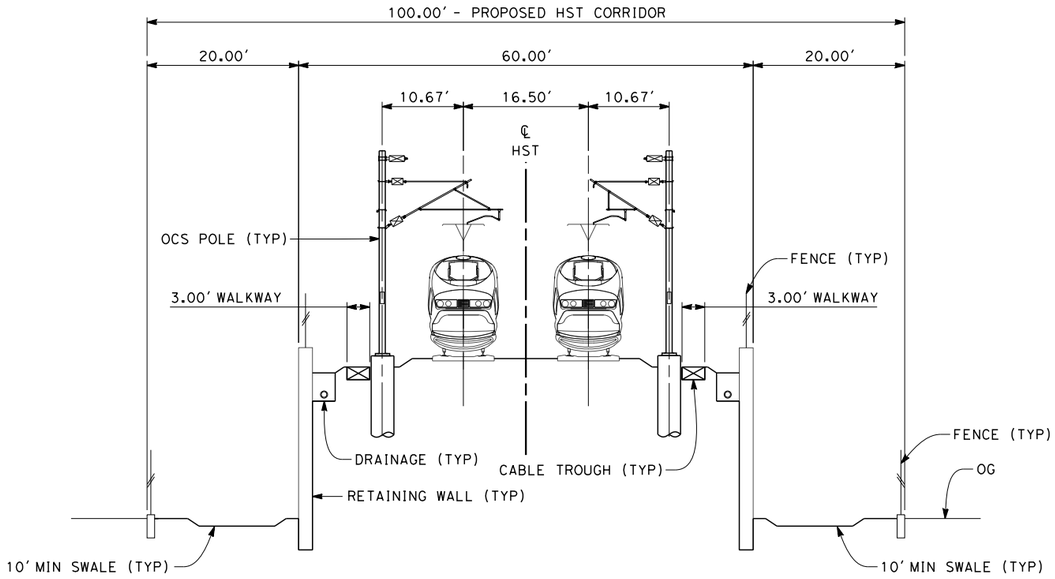


## SECTION 5

TWIN TRACK - RETAINED EMBANKMENT WITH OPEN DRAINAGE
STA 1156+20 THROUGH STA 1173+50
STA 1439+19 THROUGH STA 1463+58
STA 1596+56 THROUGH STA 1622+50
STA 1885+40 THROUGH STA 1903+57
STA 2008+37 THROUGH STA 2023+48

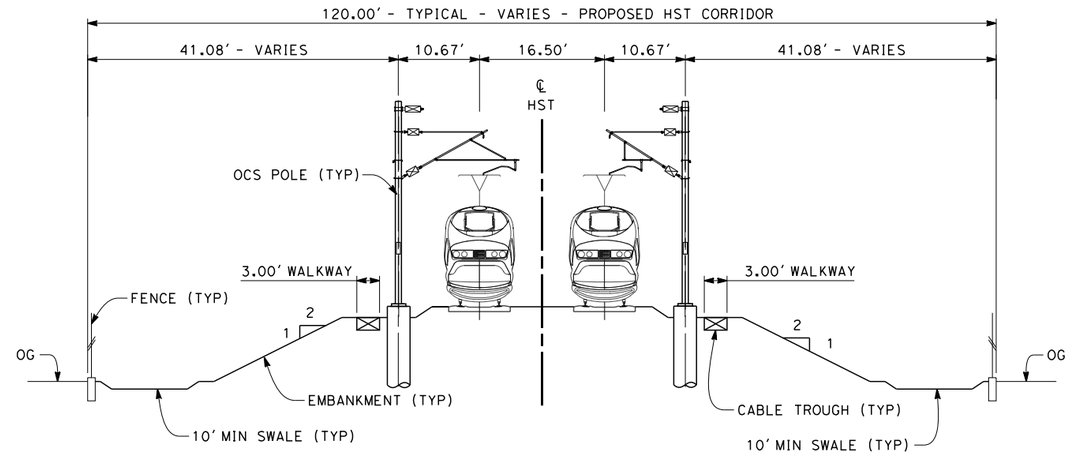


## SECTION 6

TWIN TRACK - EMBANKMENT WITH OPEN DRAINAGE
STA 1173+50 THROUGH STA 1439+19
STA 1622+50 THROUGH STA 1885+40
STA 2023+48 THROUGH STA 2144+63

10 0 10 20
1"=10'

04/02/2014 - RFP No.: HSR 13-57

| REV | DATE | BY | CHK | APP | DESCRIPTION |
|---|---|---|---|---|---|

DESIGNED BY A. POLING
DRAWN BY J. BORGHESI
CHECKED BY K. SEYMOUR
IN CHARGE R. COFFIN
DATE 12/31/13

RECORD SET 15% DESIGN SUBMISSION - NOT FOR CONSTRUCTION

URS | HMM | ARUP
CALIFORNIA HIGH-SPEED TRAIN

CALIFORNIA HIGH-SPEED RAIL AUTHORITY

**CALIFORNIA HIGH-SPEED TRAIN PROJECT**
**FRESNO TO BAKERSFIELD**
HANFORD SUBSECTION
ALIGNMENT H
TYPICAL SECTIONS

CONTRACT NO. HSR 06-0003
DRAWING NO. CB3153
SCALE AS SHOWN
SHEET NO. 28 OF 31

Nadine.Hutton 12/12/2013 4:23:34 PM c:\pwworking\hmm\external\nadine.hutton-arup.com\d0125343\H-CB-3153-H.dgn

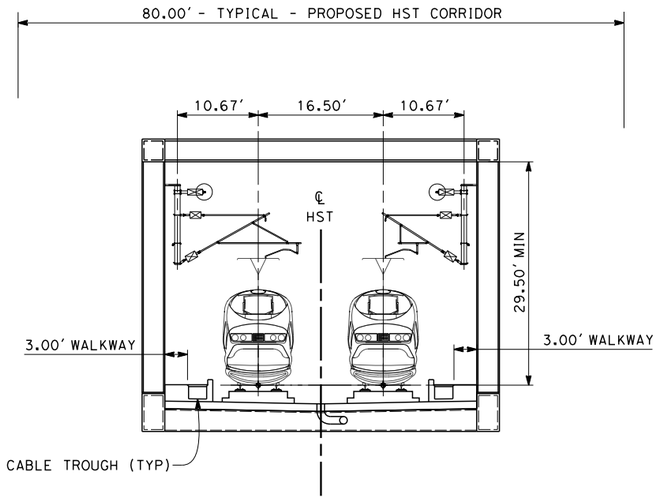


## SECTION 7

TWIN TRACK- AERIAL STEEL TRUSS
STA 1464+80 THROUGH STA 1466+97
STA 1485+70 THROUGH STA 1489+27
STA 1518+30 THROUGH STA 1525+44
STA 1580+87 THROUGH STA 1587+31
STA 1593+34 THROUGH STA 1596+56

NOTES:

1. TRACKFORM SHOWN IS INDICATIVE
2. FOR STRUCTURE DIMENSIONS SEE STRUCTURAL CROSS SECTIONS
3. SUPERELEVATION IS NOT SHOWN IN CROSS SECTIONS. FOR DETAILS OF SUPERELEVATION SEE CURVE TABLES.

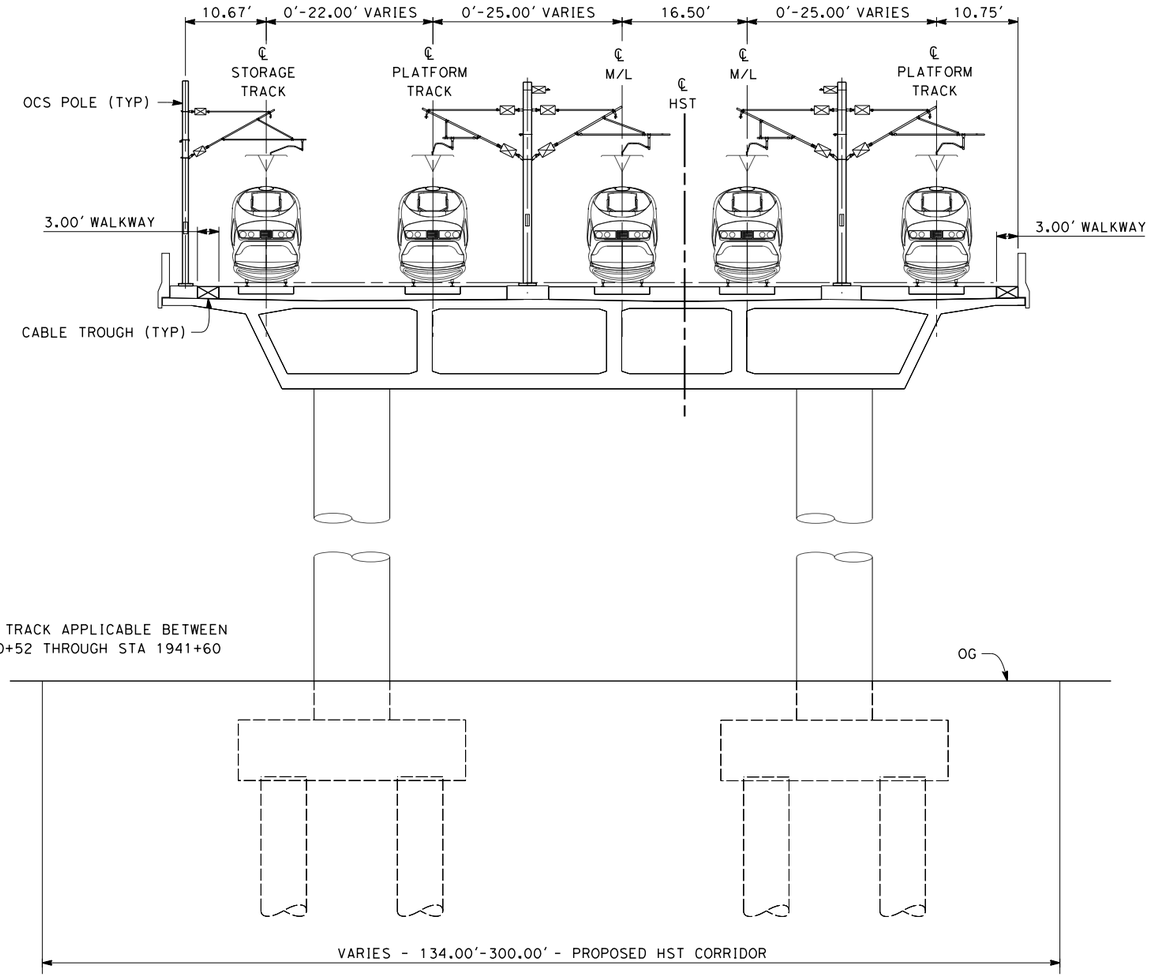


NOTE:
STORAGE TRACK APPLICABLE BETWEEN
STA 1920+52 THROUGH STA 1941+60

## SECTION 8

5 TRACK ELEVATED STATION APPROACH
STA 1919+50 THROUGH STA 1942+27

10 0 10 20
1"=10'

04/02/2014 - RFP No.: HSR 13-57

| REV | DATE | BY | CHK | APP | DESCRIPTION |
|---|---|---|---|---|---|

DESIGNED BY A. POLING
DRAWN BY J. BORGHESI
CHECKED BY K. SEYMOUR
IN CHARGE R. COFFIN
DATE 12/31/13

**RECORD SET 15% DESIGN SUBMISSION - NOT FOR CONSTRUCTION**

URS | HMM | ARUP
CALIFORNIA HIGH-SPEED TRAIN

CALIFORNIA HIGH-SPEED RAIL AUTHORITY

**CALIFORNIA HIGH-SPEED TRAIN PROJECT**
**FRESNO TO BAKERSFIELD**
HANFORD SUBSECTION
ALIGNMENT H
TYPICAL SECTIONS

CONTRACT NO. HSR 06-0003
DRAWING NO. CB3154
SCALE AS SHOWN
SHEET NO. 29 OF 31

Nadine.Hutton 12/12/2013 4:25:52 PM c:\pwworking\hmm\external\nadine.hutton-arup.com\d0125343\F-CB-3154-H.dgn

NOTES:

1. TRACKFORM SHOWN IS INDICATIVE
2. FOR STRUCTURE DIMENSIONS SEE STRUCTURAL CROSS SECTIONS
3. SUPERELEVATION IS NOT SHOWN IN CROSS SECTIONS. FOR DETAILS OF SUPERELEVATION SEE CURVE TABLES.
4. HST CORRIDOR WIDTH VARIES THROUGH THE STATION ACCORDING TO THE STATION FACILITIES PROVIDED. SEE STATION DRAWINGS FOR DETAILS.
5. MESH FENCE TO BE PROVIDED BETWEEN VIADUCT AND PLATFORM AS FALL PREVENTION BARRIER.

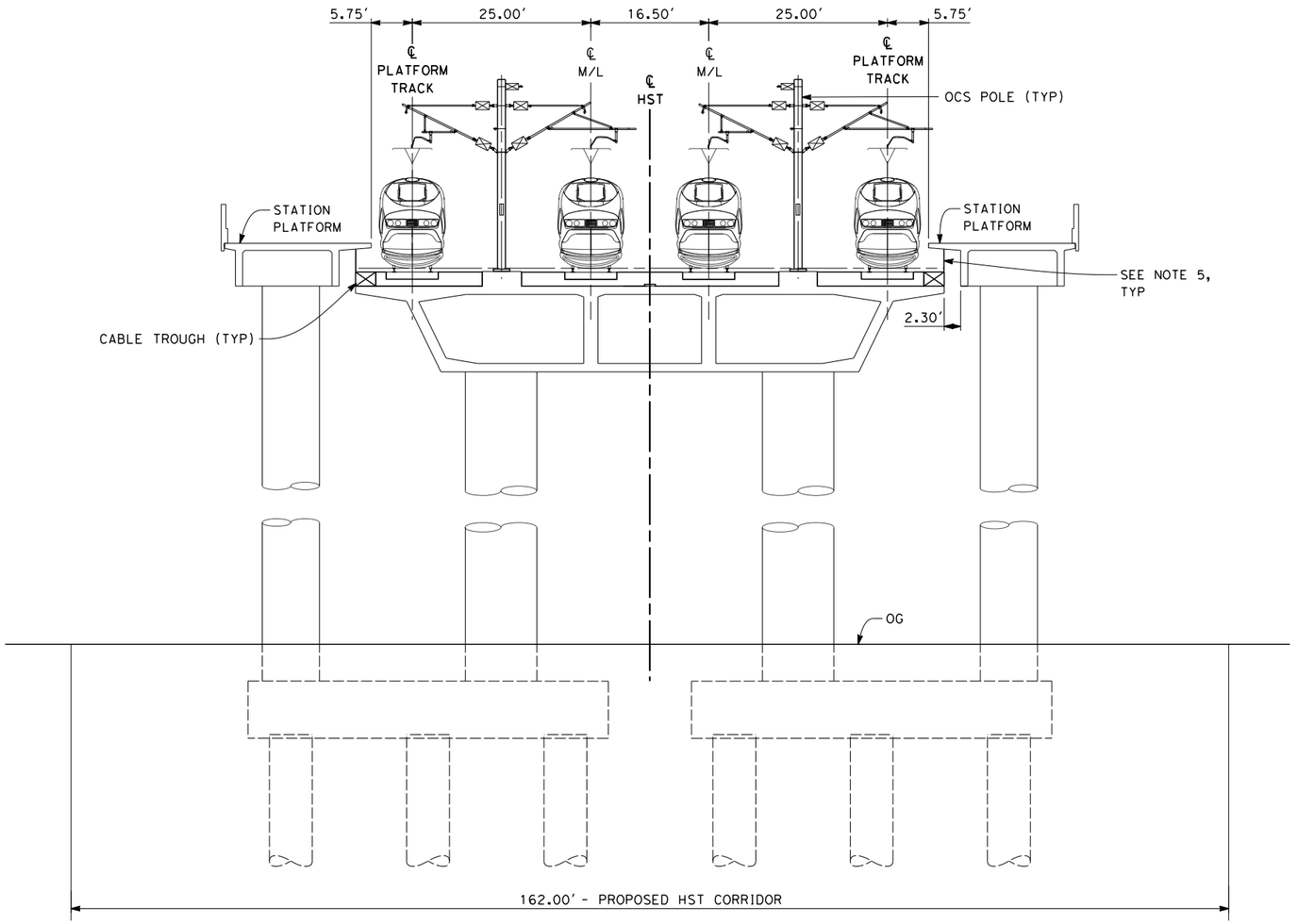


## SECTION 9

4 TRACK ELEVATED PLATFORMS
STA 1942+27 THROUGH STA 1956+67

10 0 10 20
1"=10'

| REV | DATE | BY | CHK | APP | DESCRIPTION |
|---|---|---|---|---|---|

DESIGNED BY A. POLING
DRAWN BY J. BORGHESI
CHECKED BY K. SEYMOUR
IN CHARGE R. COFFIN
DATE 12/31/13

**RECORD SET 15% DESIGN SUBMISSION - NOT FOR CONSTRUCTION**

URS | HMM | ARUP
CALIFORNIA HIGH-SPEED TRAIN

CALIFORNIA HIGH-SPEED RAIL AUTHORITY

**CALIFORNIA HIGH-SPEED TRAIN PROJECT**
**FRESNO TO BAKERSFIELD**
HANFORD SUBSECTION
ALIGNMENT H
TYPICAL SECTIONS

CONTRACT NO. HSR 06-0003
DRAWING NO. CB3155
SCALE AS SHOWN
SHEET NO. 30 OF 31

04/02/2014 - RFP No.: HSR 13-57

paul.tonkin 12/12/2013 6:51:36 PM c:\pwworking\hmm\external\paul.tonkin01-arup.com\d0125343\FB-CB-3155-H.dgn

NOTES:

1. TRACKFORM SHOWN IS INDICATIVE
2. FOR STRUCTURE DIMENSIONS SEE STRUCTURAL CROSS SECTIONS
3. SUPERELEVATION IS NOT SHOWN IN CROSS SECTIONS. FOR DETAILS OF SUPERELEVATION SEE CURVE TABLES.

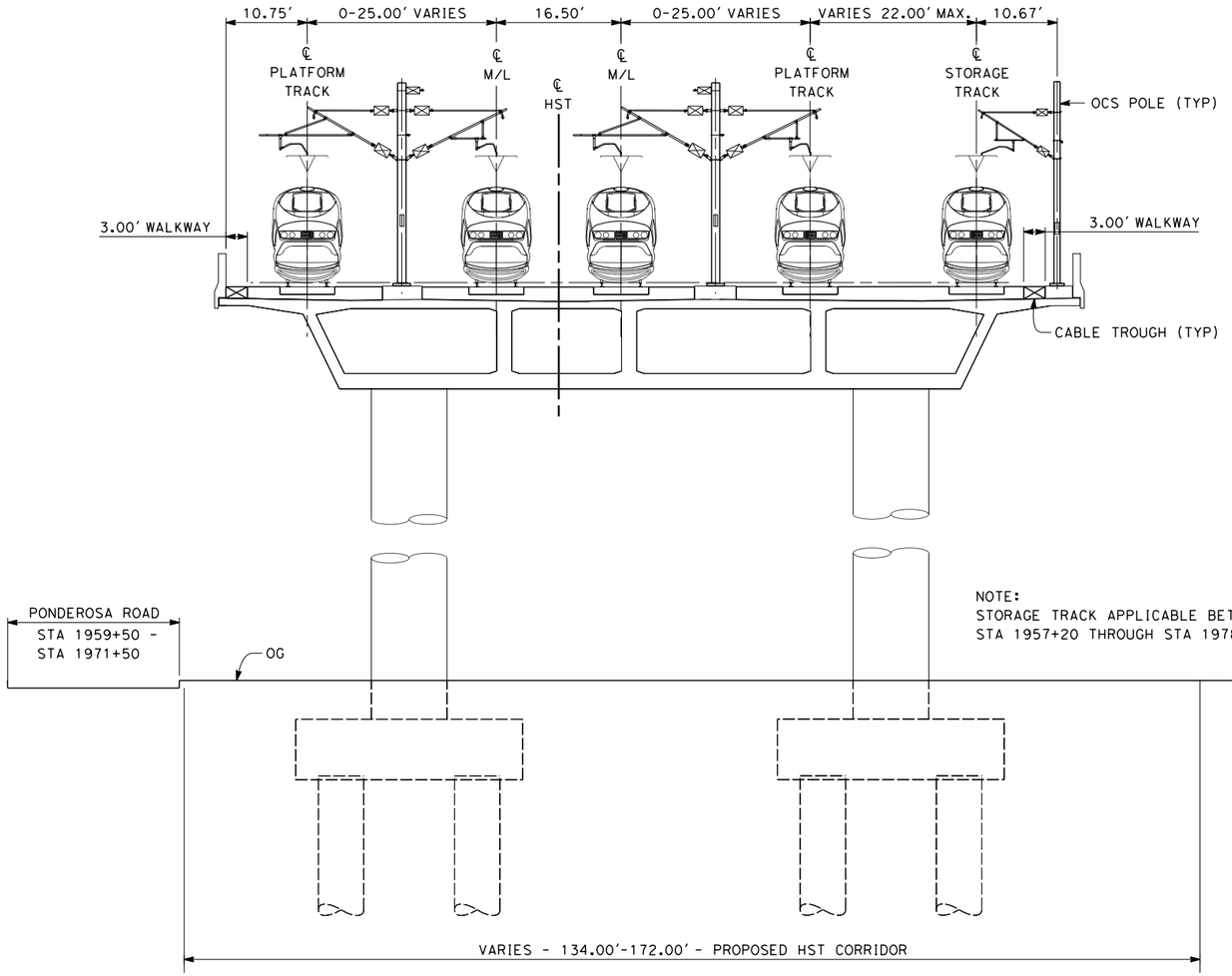


NOTE:
STORAGE TRACK APPLICABLE BETWEEN
STA 1957+20 THROUGH STA 1978+28

## SECTION 10

5 TRACK ELEVATED STATION APPROACH
STA 1956+67 THROUGH STA 1979+50

10 0 10 20
1"=10'

04/02/2014 - RFP No.: HSR 13-57

12/12/2013 7:01:28 PM c:\pwworking\hmm\external\paul.tonkin01-arup.com\d0125343\FB-CB-3156-H.dgn
paul.tonkin

| REV | DATE | BY | CHK | APP | DESCRIPTION |
|---|---|---|---|---|---|

DESIGNED BY A. POLING
DRAWN BY J. BORGHESI
CHECKED BY K. SEYMOUR
IN CHARGE R. COFFIN
DATE 12/31/13

**RECORD SET 15% DESIGN SUBMISSION - NOT FOR CONSTRUCTION**

URS | HMM | ARUP
CALIFORNIA HIGH-SPEED TRAIN

CALIFORNIA HIGH-SPEED RAIL AUTHORITY

**CALIFORNIA HIGH-SPEED TRAIN PROJECT**
**FRESNO TO BAKERSFIELD**
HANFORD SUBSECTION
ALIGNMENT H
TYPICAL SECTIONS

CONTRACT NO. HSR 06-0003
DRAWING NO. CB3156
SCALE AS SHOWN
SHEET NO. 31 OF 31

| REV | DATE | BY | CHK | APP | DESCRIPTION |
|---|---|---|---|---|---|
| | | | | | |

DESIGNED BY A. POLING
DRAWN BY P. TONKIN
CHECKED BY K. SEYMOUR
IN CHARGE R. COFFIN
DATE 12/31/13

**RECORD SET 15% DESIGN SUBMISSION - NOT FOR CONSTRUCTION**

URS | HMM | ARUP
CALIFORNIA HIGH-SPEED TRAIN

CALIFORNIA
HIGH-SPEED RAIL AUTHORITY

# CALIFORNIA HIGH-SPEED TRAIN PROJECT
# FRESNO TO BAKERSFIELD

KAWEAH SUBSECTION
ALIGNMENT K4
STA. 2074+96 TO 2598+60
KEY MAP

CONTRACT NO. HSR 06-0003
DRAWING NO. CB1130
SCALE AS SHOWN
SHEET NO. 1 OF 15

04/02/2014 - RFP No.: HSR 13-57

eron.sudhausen 12/9/2013 5:46:28 PM c:\pwworking\hmm\external\eron.sudhausen-arup.com\d0125355\FB-CB-1130-K4.dgn

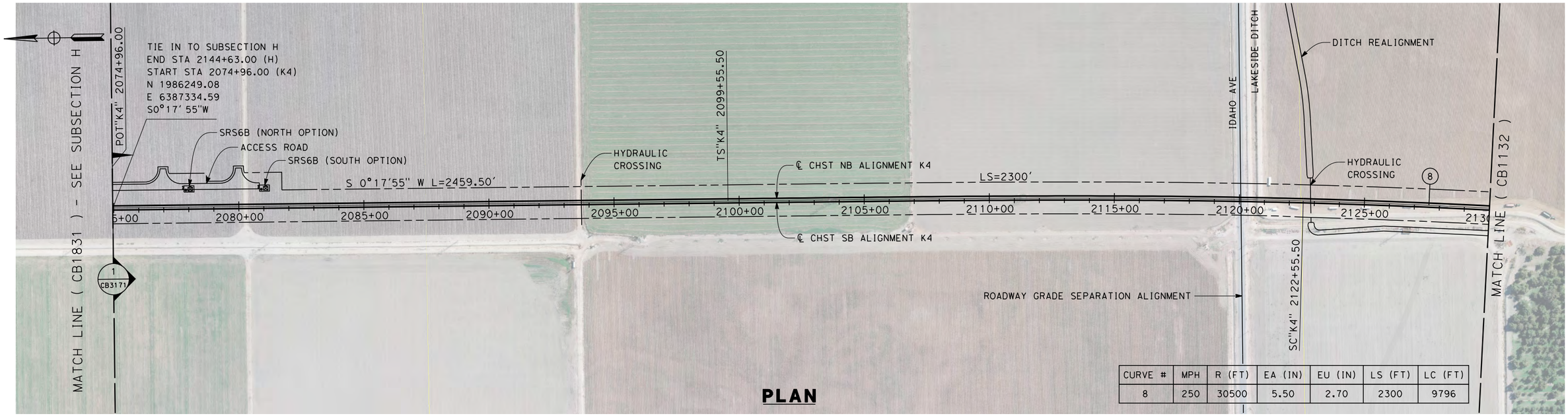


| CURVE # | MPH | R (FT) | EA (IN) | EU (IN) | LS (FT) | LC (FT) |
|---|---|---|---|---|---|---|
| 8 | 250 | 30500 | 5.50 | 2.70 | 2300 | 9796 |

**PLAN**

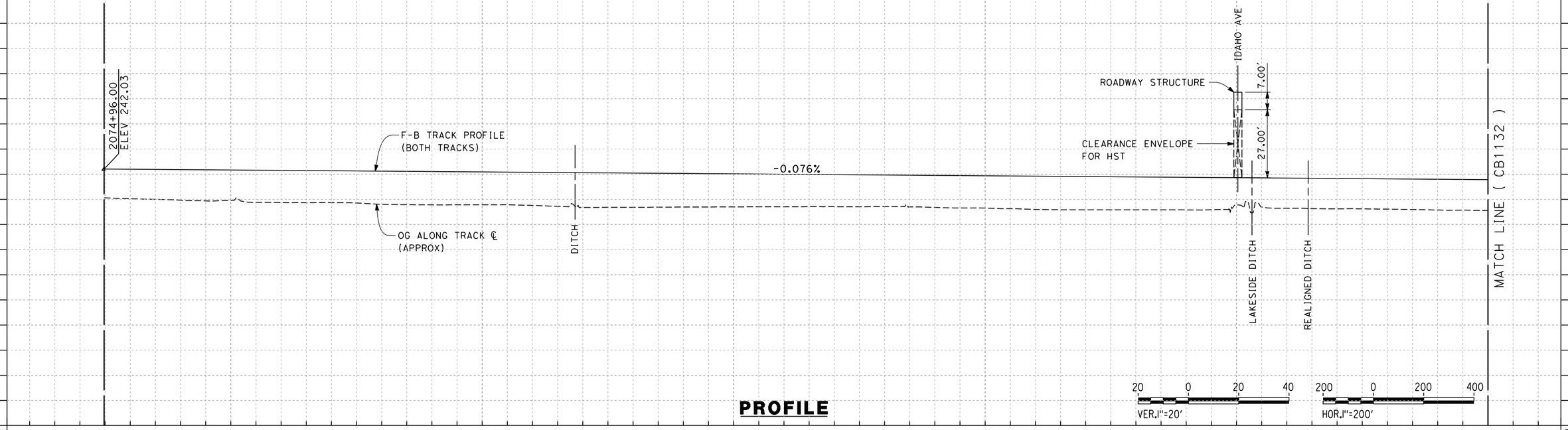


**PROFILE**

| REV | DATE | BY | CHK | APP | DESCRIPTION |
|---|---|---|---|---|---|

DESIGNED BY A. POLING
DRAWN BY E. TANAKA
CHECKED BY K. SEYMOUR
IN CHARGE R. COFFIN
DATE 12/31/13

**RECORD SET 15% DESIGN SUBMISSION - NOT FOR CONSTRUCTION**

URS | HMM | ARUP
CALIFORNIA HIGH-SPEED TRAIN

CALIFORNIA HIGH-SPEED RAIL AUTHORITY

**CALIFORNIA HIGH-SPEED TRAIN PROJECT**
**FRESNO TO BAKERSFIELD**
KAWEAH SUBSECTION
ALIGNMENT K4
STA 2074+96 TO 2130+00
PLAN AND PROFILE

CONTRACT NO. HSR 06-0003
DRAWING NO. CB1131
SCALE AS SHOWN
SHEET NO. 2 OF 15

**04/02/2014 - RFP No.: HSR 13-57**

12/12/2013 8:39:55 PM c:\pwworking\hmm\external\paul.tonkin01-arup.com\d0125355\FB-CB-1131-K4.dgn paul.tonkin

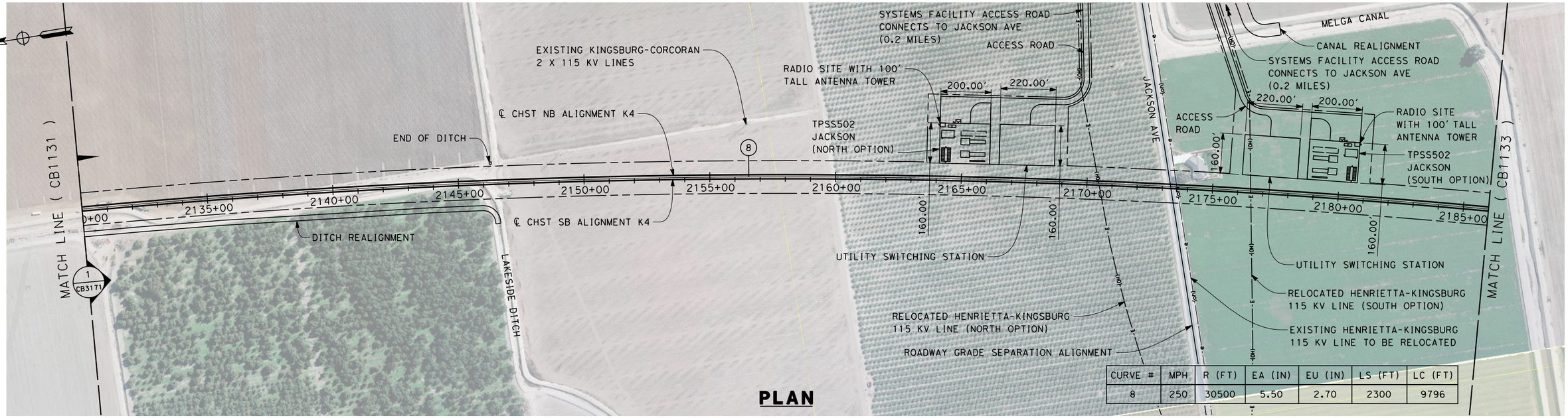


| CURVE # | MPH | R (FT) | EA (IN) | EU (IN) | LS (FT) | LC (FT) |
|---|---|---|---|---|---|---|
| 8 | 250 | 30500 | 5.50 | 2.70 | 2300 | 9796 |

**PLAN**

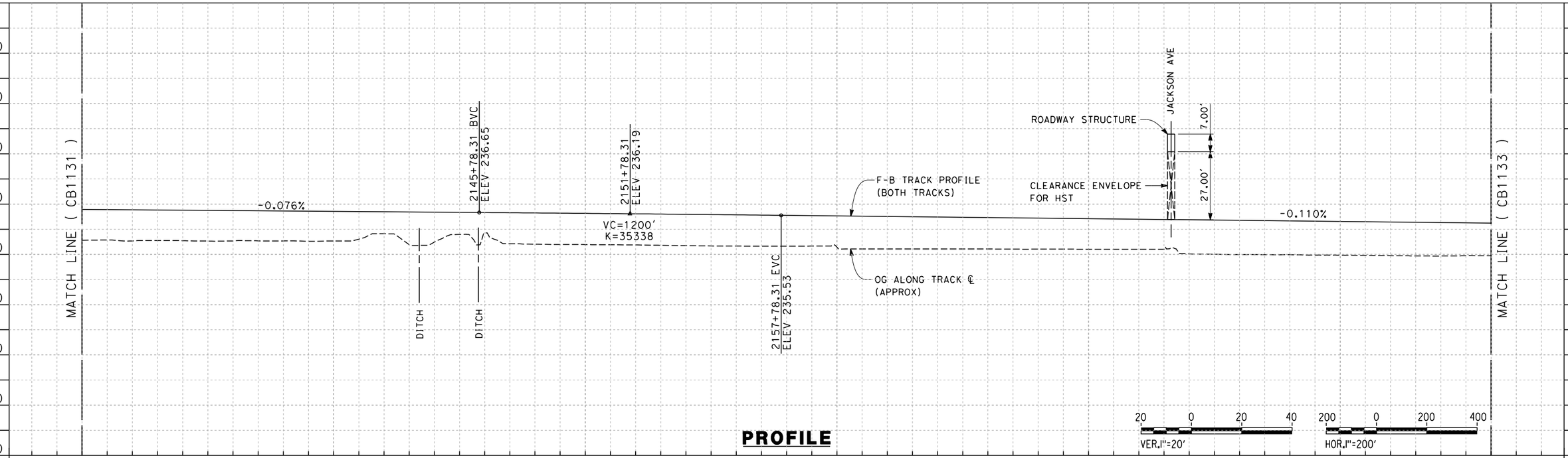


**PROFILE**

| REV | DATE | BY | CHK | APP | DESCRIPTION |
|---|---|---|---|---|---|

DESIGNED BY A. POLING
DRAWN BY E. TANAKA
CHECKED BY K. SEYMOUR
IN CHARGE R. COFFIN
DATE 12/31/13

**RECORD SET 15% DESIGN SUBMISSION - NOT FOR CONSTRUCTION**

URS | HMM | ARUP
CALIFORNIA HIGH-SPEED TRAIN

CALIFORNIA HIGH-SPEED RAIL AUTHORITY

**CALIFORNIA HIGH-SPEED TRAIN PROJECT**
**FRESNO TO BAKERSFIELD**
KAWEAH SUBSECTION
ALIGNMENT K4
STA. 2130+00 TO 2186+00
PLAN AND PROFILE

CONTRACT NO. HSR 06-0003
DRAWING NO. CB1132
SCALE AS SHOWN
SHEET NO. 3 OF 15

RFP No.: HSR 13-57
04/02/2014

frank.palermo 12/31/2013 10:57:14 AM c:\pwworking\hmm\external\frank.palermo01-arup.com\d0125355\FB-CB-1132-K4.dgn

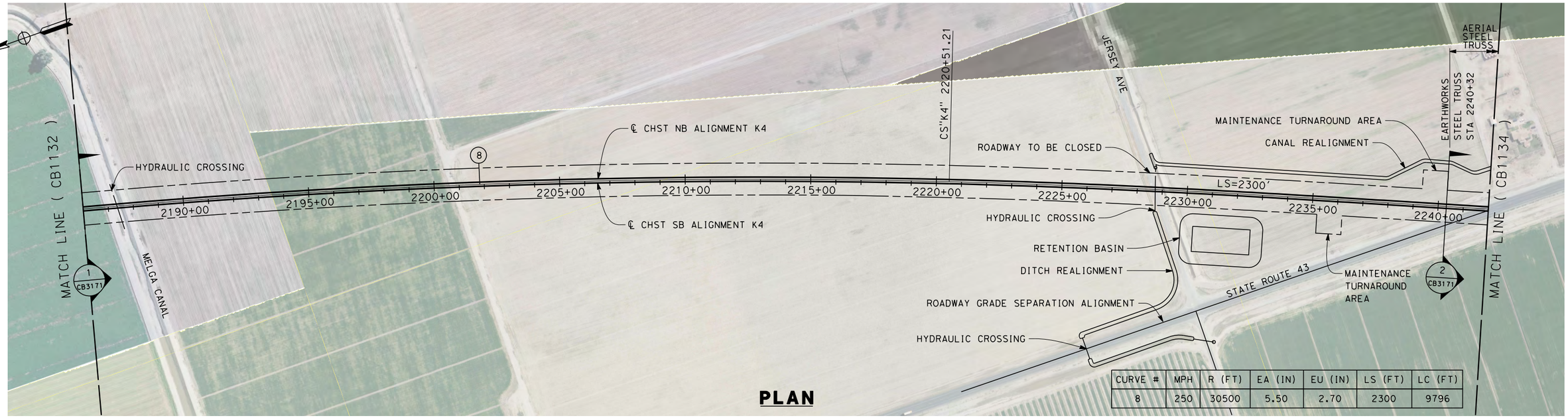


| CURVE # | MPH | R (FT) | EA (IN) | EU (IN) | LS (FT) | LC (FT) |
|---|---|---|---|---|---|---|
| 8 | 250 | 30500 | 5.50 | 2.70 | 2300 | 9796 |

**PLAN**

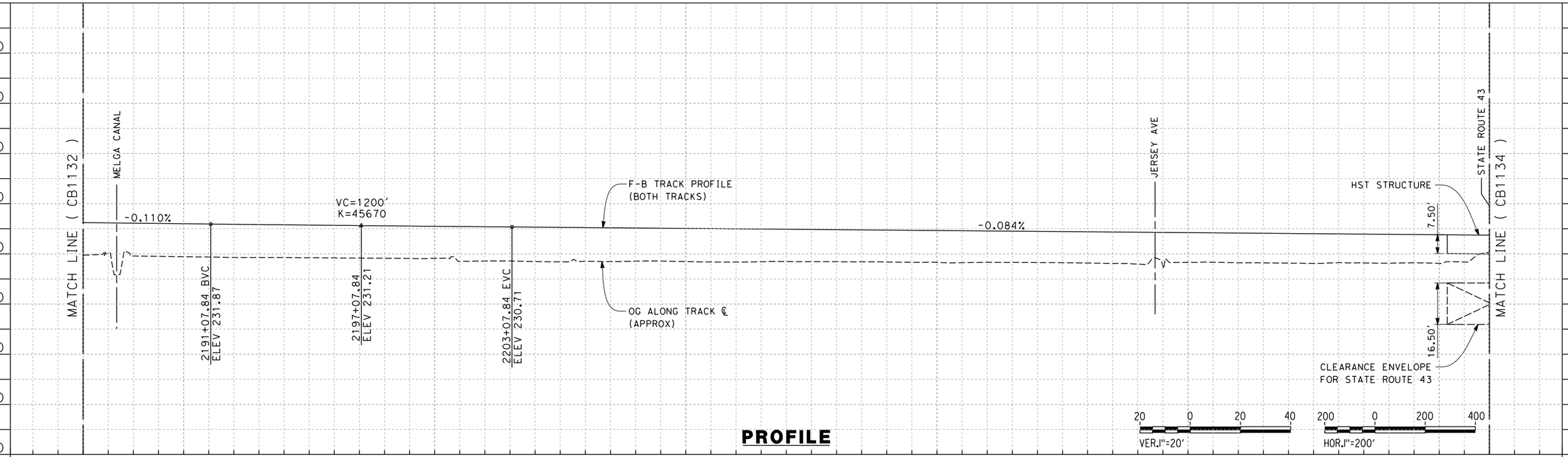


**PROFILE**

| REV | DATE | BY | CHK | APP | DESCRIPTION |
|---|---|---|---|---|---|

DESIGNED BY A. POLING
DRAWN BY E. TANAKA
CHECKED BY K. SEYMOUR
IN CHARGE R. COFFIN
DATE 12/31/13

**RECORD SET 15% DESIGN SUBMISSION - NOT FOR CONSTRUCTION**

URS | HMM | ARUP
CALIFORNIA HIGH-SPEED TRAIN

CALIFORNIA
HIGH-SPEED RAIL AUTHORITY

# CALIFORNIA HIGH-SPEED TRAIN PROJECT
# FRESNO TO BAKERSFIELD

KAWEAH SUBSECTION
ALIGNMENT K4
STA. 2186+00 TP 2242+00
PLAN AND PROFILE

CONTRACT NO. HSR 06-0003
DRAWING NO. CB1133
SCALE AS SHOWN
SHEET NO. 4 OF 15

04/02/2014 - RFP No.: HSR 13-57

12/12/2013 8:45:10 PM c:\pwworking\hmm\external\paul.tonkin01-arup.com\d0125355\FB-CB-1133-K4.dgn paul.tonkin

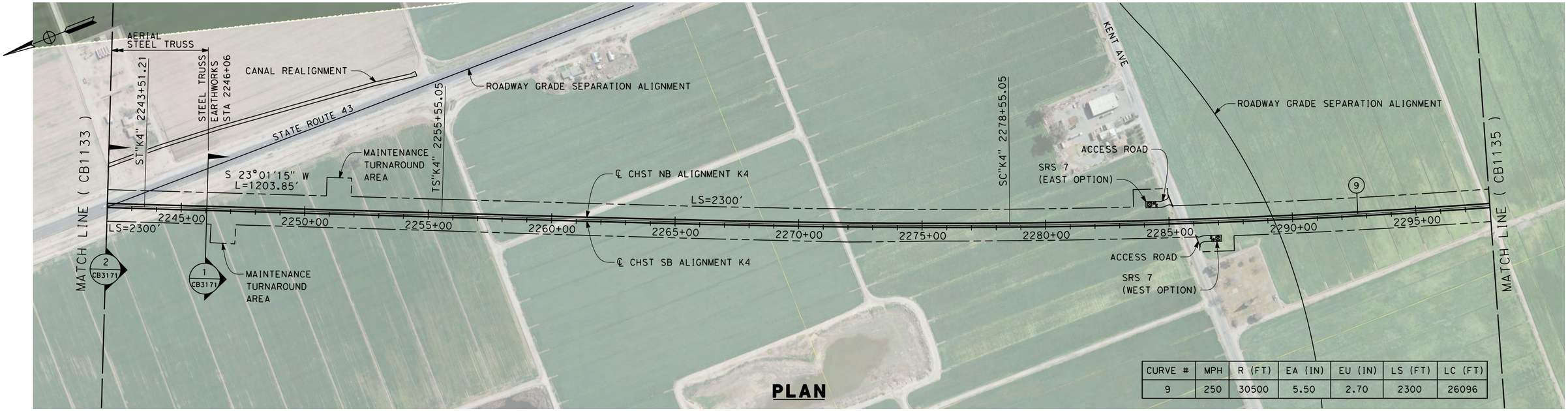


| CURVE # | MPH | R (FT) | EA (IN) | EU (IN) | LS (FT) | LC (FT) |
|---|---|---|---|---|---|---|
| 9 | 250 | 30500 | 5.50 | 2.70 | 2300 | 26096 |

**PLAN**

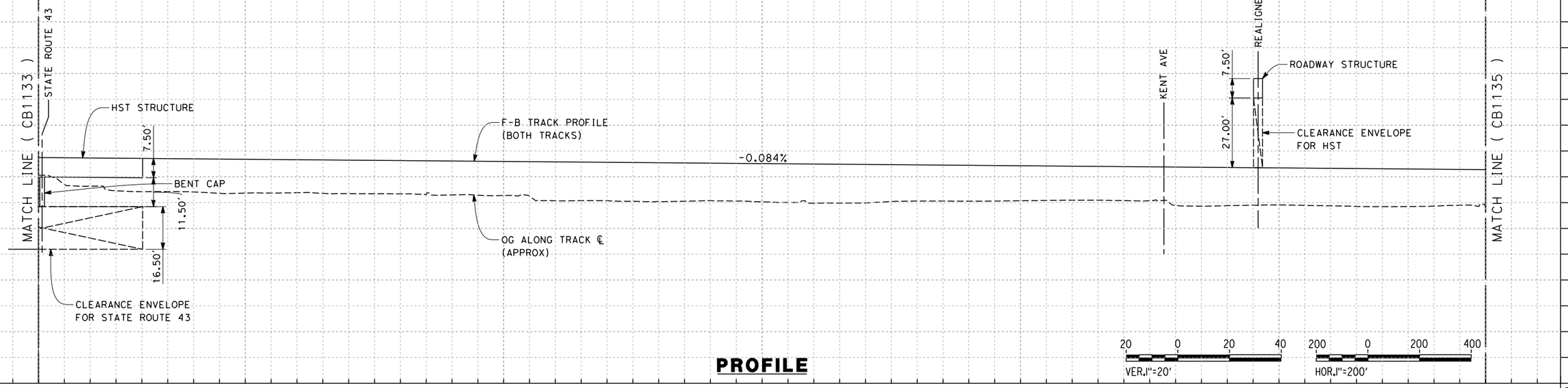


**PROFILE**

| REV | DATE | BY | CHK | APP | DESCRIPTION |
|---|---|---|---|---|---|

DESIGNED BY A. POLING
DRAWN BY E. TANAKA
CHECKED BY K. SEYMOUR
IN CHARGE R. COFFIN
DATE 12/31/13

**RECORD SET 15% DESIGN SUBMISSION - NOT FOR CONSTRUCTION**

URS | HMM | ARUP
CALIFORNIA HIGH-SPEED TRAIN

CALIFORNIA HIGH-SPEED RAIL AUTHORITY

# CALIFORNIA HIGH-SPEED TRAIN PROJECT FRESNO TO BAKERSFIELD

KAWEAH SUBSECTION
ALIGNMENT K4
STA. 2242+00 TO 2298+00
PLAN AND PROFILE

CONTRACT NO. HSR 06-0003
DRAWING NO. CB1134
SCALE AS SHOWN
SHEET NO. 5 OF 15

04/02/2014 - RFP No.: HSR 13-57

12/23/2013 9:59:42 AM c:\pwworking\hmm\external\paul.tonkin01-arup.com\d0125355\FB-CB-1134-K4.dgn paul.tonkin

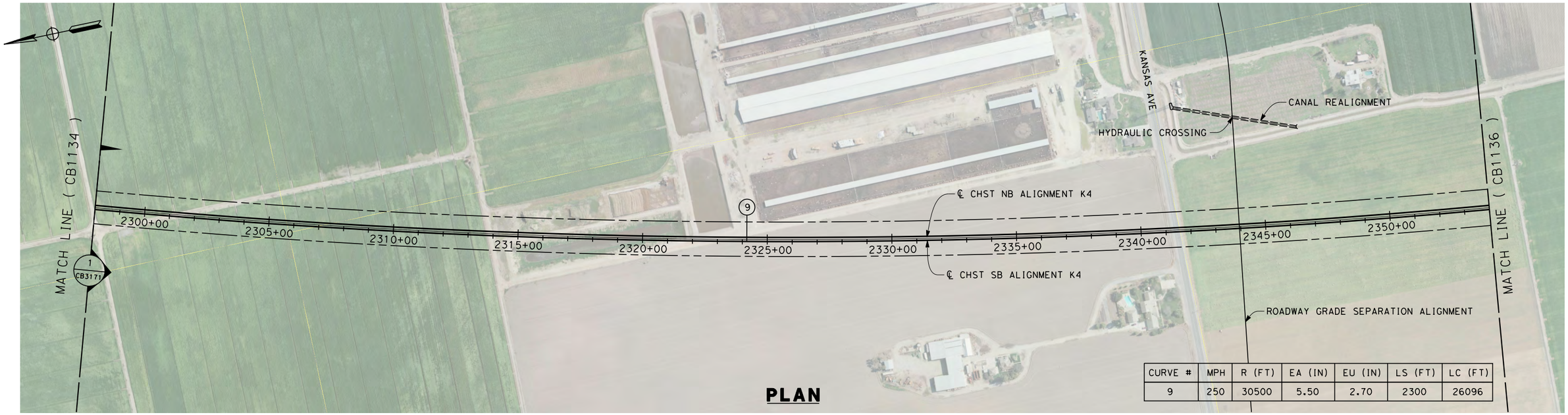


| CURVE # | MPH | R (FT) | EA (IN) | EU (IN) | LS (FT) | LC (FT) |
|---|---|---|---|---|---|---|
| 9 | 250 | 30500 | 5.50 | 2.70 | 2300 | 26096 |

**PLAN**

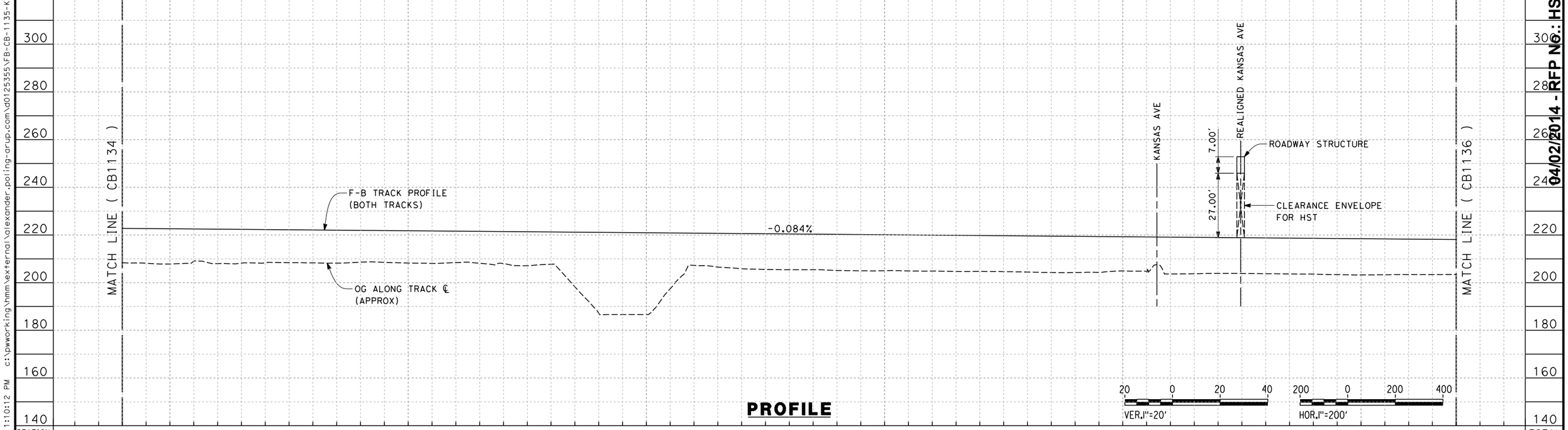


**PROFILE**

| REV | DATE | BY | CHK | APP | DESCRIPTION |
|---|---|---|---|---|---|

DESIGNED BY A. POLING
DRAWN BY E. TANAKA
CHECKED BY K. SEYMOUR
IN CHARGE R. COFFIN
DATE 12/31/13

**RECORD SET 15% DESIGN SUBMISSION - NOT FOR CONSTRUCTION**

URS | HMM | ARUP
CALIFORNIA HIGH-SPEED TRAIN

CALIFORNIA HIGH-SPEED RAIL AUTHORITY

# CALIFORNIA HIGH-SPEED TRAIN PROJECT
# FRESNO TO BAKERSFIELD

KAWEAH SUBSECTION
ALIGNMENT K4
STA. 2298+00 TO 2354+00
PLAN AND PROFILE

CONTRACT NO. HSR 06-0003
DRAWING NO. CB1135
SCALE AS SHOWN
SHEET NO. 6 OF 15

04/02/2014 - RFP No.: HSR 13-57

alexander.poling 12/12/2013 1:10:12 PM c:\pwworking\hmm\external\alexander.poling-arup.com\d0125355\FB-CB-1135-K4.dgn

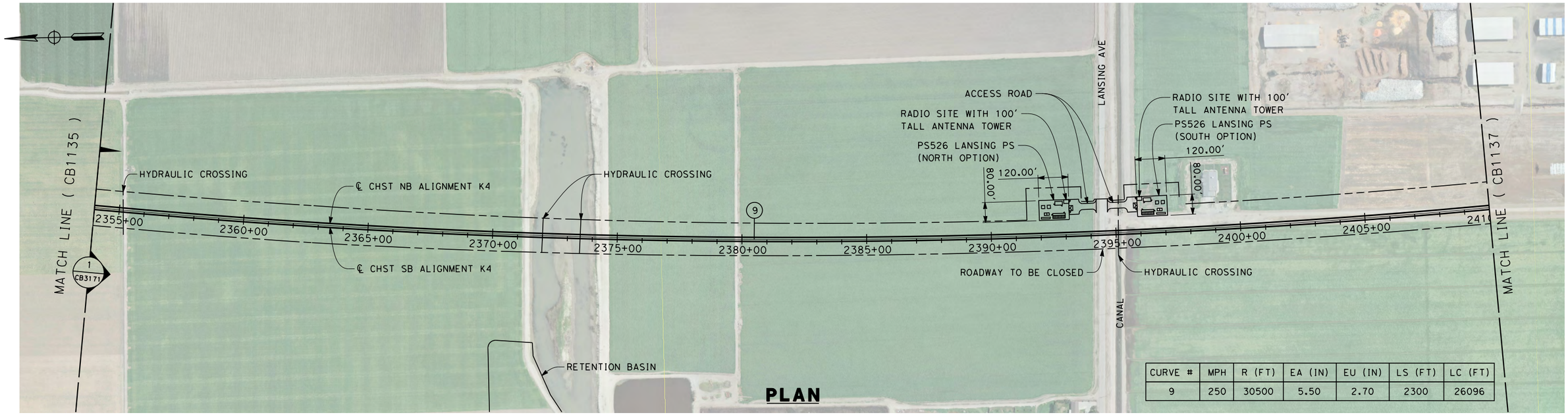


**PLAN**

| CURVE # | MPH | R (FT) | EA (IN) | EU (IN) | LS (FT) | LC (FT) |
|---|---|---|---|---|---|---|
| 9 | 250 | 30500 | 5.50 | 2.70 | 2300 | 26096 |

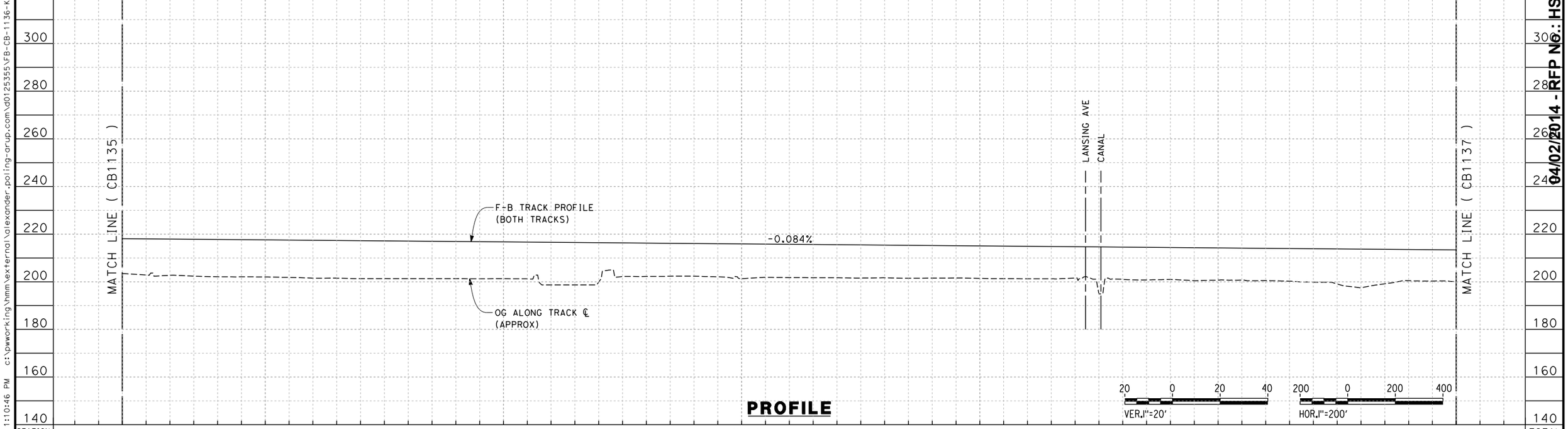


**PROFILE**

| REV | DATE | BY | CHK | APP | DESCRIPTION |
|---|---|---|---|---|---|

DESIGNED BY A. POLING
DRAWN BY E. TANAKA
CHECKED BY K. SEYMOUR
IN CHARGE R. COFFIN
DATE 12/31/13

**RECORD SET 15% DESIGN SUBMISSION - NOT FOR CONSTRUCTION**

URS | HMM | ARUP
CALIFORNIA HIGH-SPEED TRAIN

CALIFORNIA HIGH-SPEED RAIL AUTHORITY

# CALIFORNIA HIGH-SPEED TRAIN PROJECT
# FRESNO TO BAKERSFIELD

KAWEAH SUBSECTION
ALIGNMENT K4
STA. 2354+00 TO 2410+00
PLAN AND PROFILE

CONTRACT NO. HSR 06-0003
DRAWING NO. CB1136
SCALE AS SHOWN
SHEET NO. 7 OF 15

04/02/2014 - RFP No.: HSR 13-57

alexander.poling 12/12/2013 1:10:46 PM c:\pwworking\hmm\external\alexander.poling-arup.com\d0125355\FB-CB-1136-K4.dgn

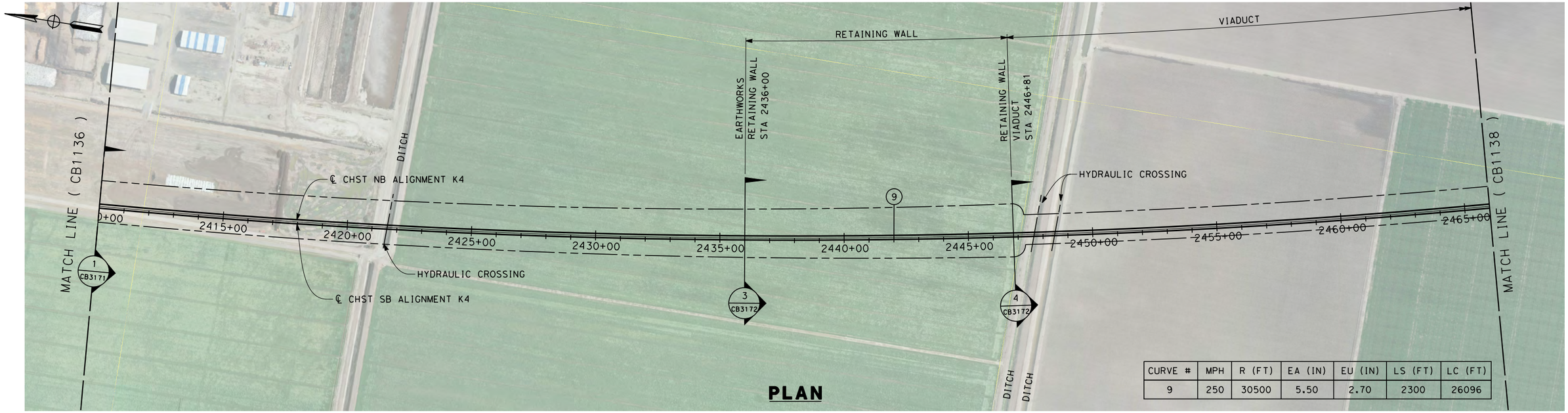


| CURVE # | MPH | R (FT) | EA (IN) | EU (IN) | LS (FT) | LC (FT) |
|---|---|---|---|---|---|---|
| 9 | 250 | 30500 | 5.50 | 2.70 | 2300 | 26096 |

**PLAN**

EMBANKMENT OR AN ALTERNATIVE STRUCTURE MAY BE PROVIDED SUBJECT TO APPROVAL OF APPROPRIATE AGENCIES. SAFE PASSAGE OF FLOOD FLOWS AND WILDLIFE MUST BE MAINTAINED.

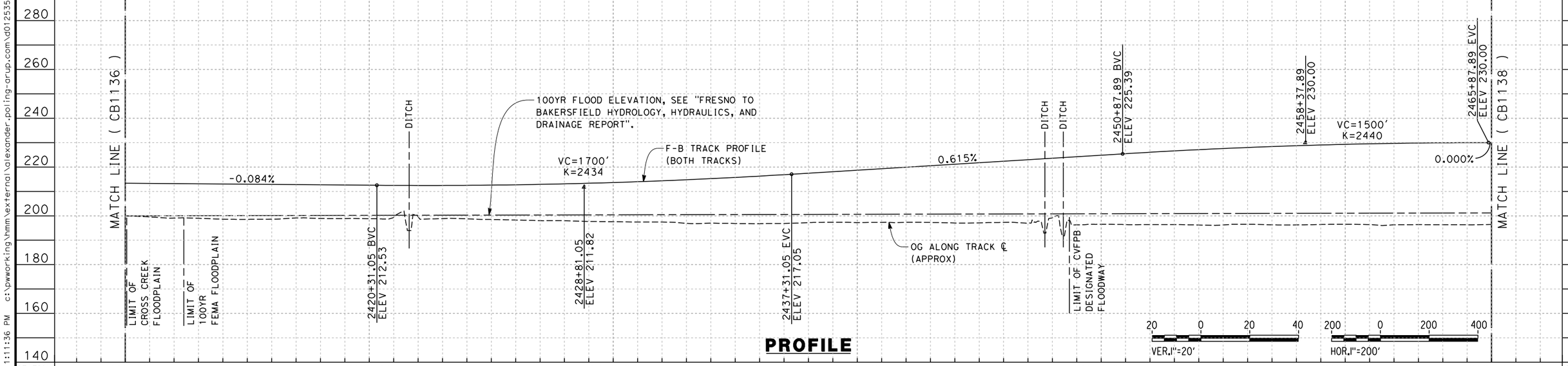


**PROFILE**

| STATION | 2410+00 | 2420+00 | 2430+00 | 2440+00 | 2450+00 | 2460+00 | 2466+00 | TOTAL |
|---|---|---|---|---|---|---|---|---|
| CY Exc | | | | | | | | |
| CY Emb | | | | | | | | |

| REV | DATE | BY | CHK | APP | DESCRIPTION |
|---|---|---|---|---|---|

DESIGNED BY A. POLING
DRAWN BY E. TANAKA
CHECKED BY K. SEYMOUR
IN CHARGE R. COFFIN
DATE 12/31/13

**RECORD SET 15% DESIGN SUBMISSION - NOT FOR CONSTRUCTION**

URS | HMM | ARUP
CALIFORNIA HIGH-SPEED TRAIN

CALIFORNIA HIGH-SPEED RAIL AUTHORITY

# CALIFORNIA HIGH-SPEED TRAIN PROJECT
## FRESNO TO BAKERSFIELD
KAWEAH SUBSECTION
ALIGNMENT K4
STA. 2410+00 TO 2466+00
PLAN AND PROFILE

CONTRACT NO. HSR 06-0003
DRAWING NO. CB1137
SCALE AS SHOWN
SHEET NO. 8 OF 15

04/02/2014 - RFP NO.: HSR 13-57

alexander.poling 12/12/2013 1:11:36 PM c:\pwworking\hmm\external\alexander.poling-arup.com\d0125355\FB-CB-1137-K4.dgn

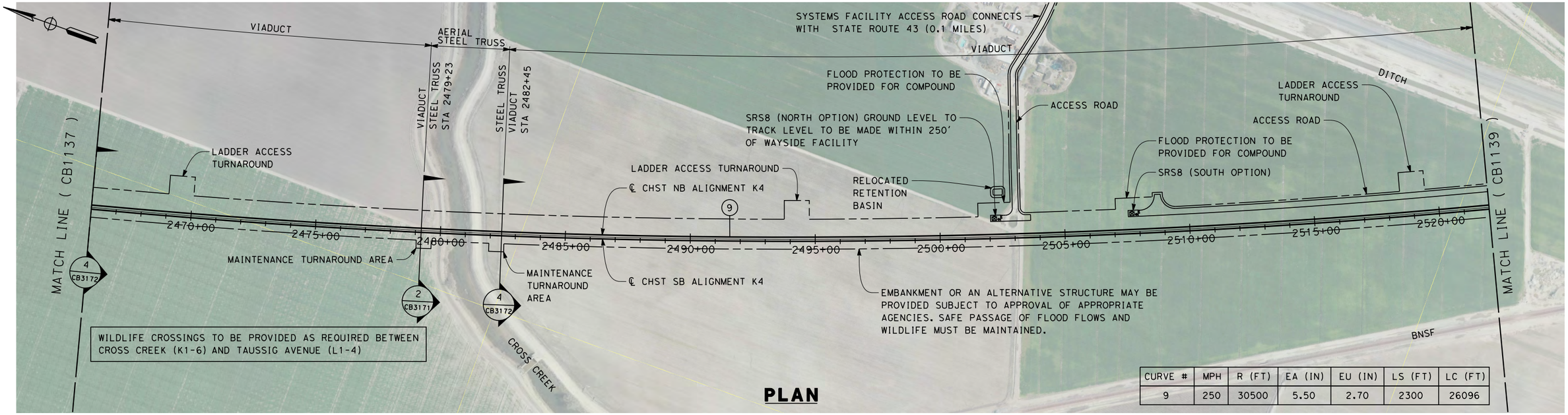


| CURVE # | MPH | R (FT) | EA (IN) | EU (IN) | LS (FT) | LC (FT) |
|---|---|---|---|---|---|---|
| 9 | 250 | 30500 | 5.50 | 2.70 | 2300 | 26096 |

## PLAN

EMBANKMENT OR AN ALTERNATIVE STRUCTURE MAY BE PROVIDED SUBJECT TO APPROVAL OF APPROPRIATE AGENCIES. SAFE PASSAGE OF FLOOD FLOWS AND WILDLIFE MUST BE MAINTAINED.

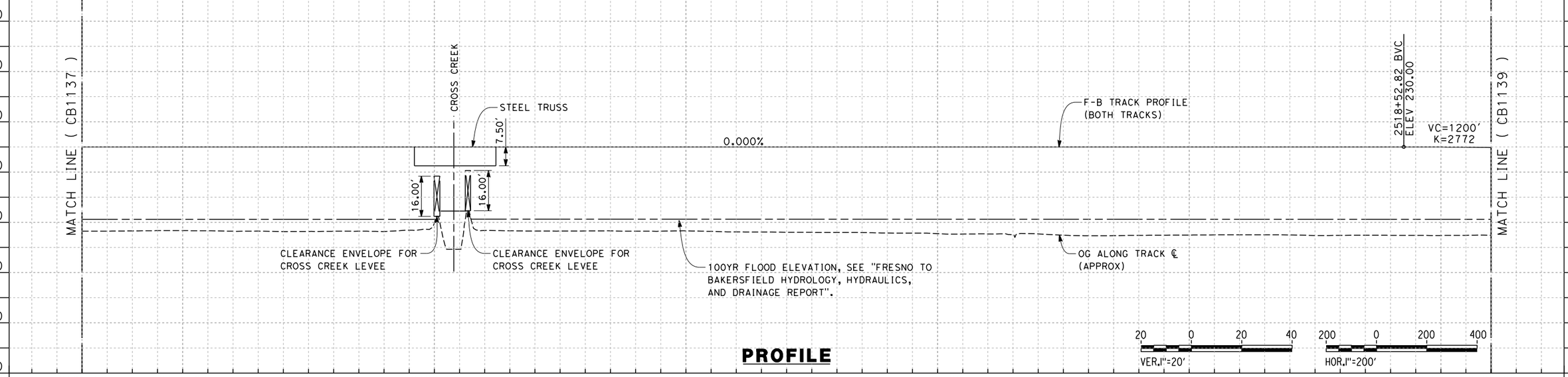


## PROFILE

| STATION | 2466+00 | 2470+00 | 2480+00 | 2490+00 | 2500+00 | 2510+00 | 2520+00 | 2522+00 | TOTAL |
|---|---|---|---|---|---|---|---|---|---|
| CY Exc | | | | | | | | | |
| CY Emb | | | | | | | | | |

| REV | DATE | BY | CHK | APP | DESCRIPTION |
|---|---|---|---|---|---|

DESIGNED BY G. WALKER
DRAWN BY P. TONKIN
CHECKED BY G. MEJIA
IN CHARGE R. COFFIN
DATE 12/31/13

**RECORD SET 15% DESIGN SUBMISSION - NOT FOR CONSTRUCTION**

URS | HMM | ARUP
CALIFORNIA HIGH-SPEED TRAIN

CALIFORNIA HIGH-SPEED RAIL AUTHORITY

**CALIFORNIA HIGH-SPEED TRAIN PROJECT**
**FRESNO TO BAKERSFIELD**
KAWEAH SUBSECTION
ALIGNMENT K4
STA. 2466+00 TO 2522+00
PLAN AND PROFILE

CONTRACT NO. HSR 06-0003
DRAWING NO. CB1138
SCALE AS SHOWN
SHEET NO. 9 OF 13

04/02/2014 - RFP No.: HSR 13-57

alexander.poling 12/12/2013 1:12:23 PM c:\pwworking\hmm\external\alexander.poling-arup.com\d0125355\FB-CB-1138-K4.dgn

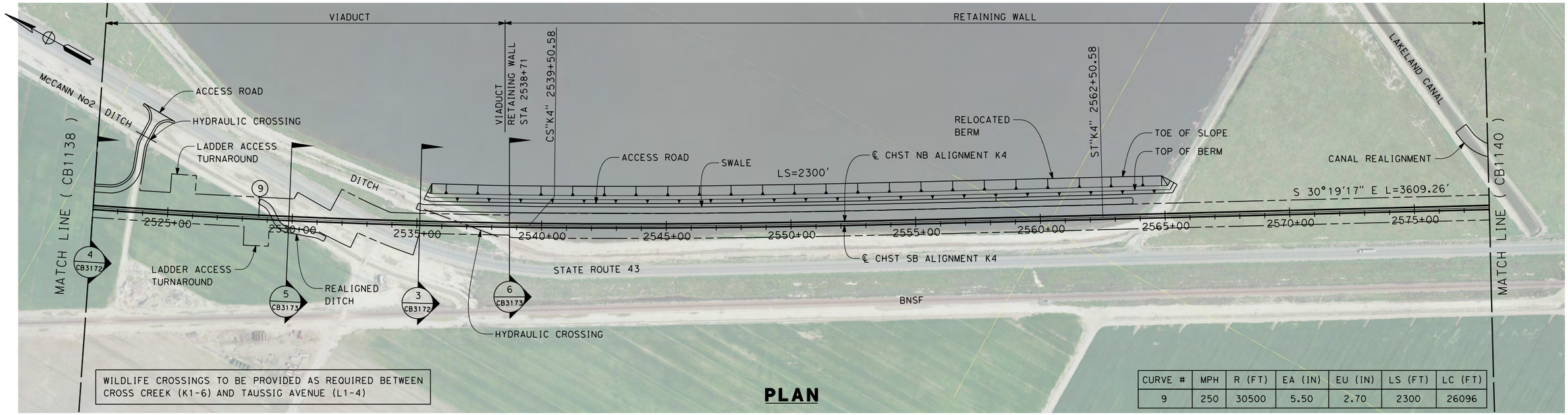


WILDLIFE CROSSINGS TO BE PROVIDED AS REQUIRED BETWEEN CROSS CREEK (K1-6) AND TAUSSIG AVENUE (L1-4)

**PLAN**

| CURVE # | MPH | R (FT) | EA (IN) | EU (IN) | LS (FT) | LC (FT) |
|---|---|---|---|---|---|---|
| 9 | 250 | 30500 | 5.50 | 2.70 | 2300 | 26096 |

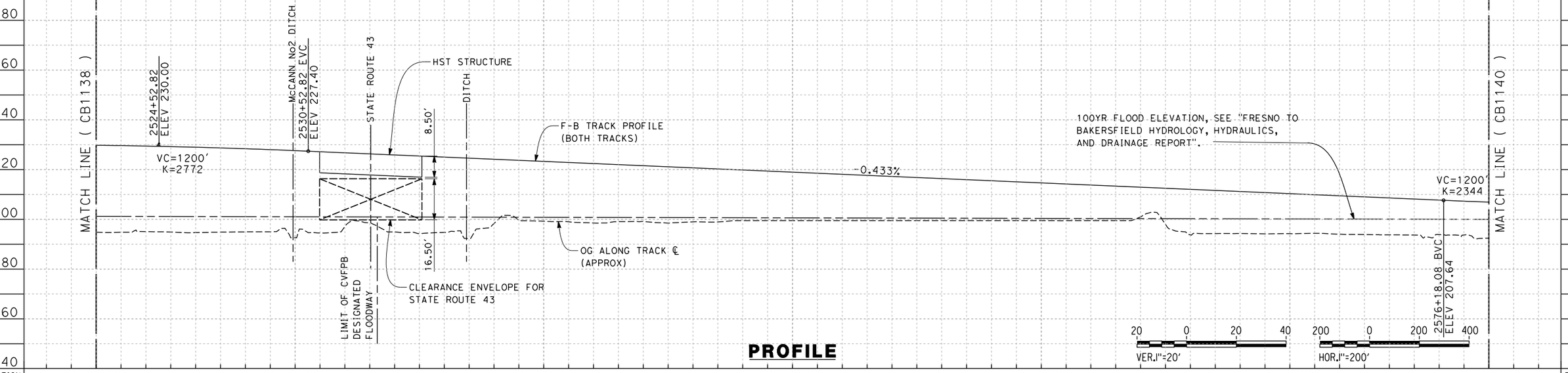


**PROFILE**

| STATION | 2522+00 | 2530+00 | 2540+00 | 2550+00 | 2560+00 | 2570+00 | 2578+00 | TOTAL |
|---|---|---|---|---|---|---|---|---|
| CY Exc | | | | | | | | |
| CY Emb | | | | | | | | |

| REV | DATE | BY | CHK | APP | DESCRIPTION |
|---|---|---|---|---|---|

DESIGNED BY A. POLING
DRAWN BY E. TANAKA
CHECKED BY K. SEYMOUR
IN CHARGE R. COFFIN
DATE 12/31/13

**RECORD SET 15% DESIGN SUBMISSION - NOT FOR CONSTRUCTION**

URS | HMM | ARUP
CALIFORNIA HIGH-SPEED TRAIN

CALIFORNIA HIGH-SPEED RAIL AUTHORITY

**CALIFORNIA HIGH-SPEED TRAIN PROJECT**
**FRESNO TO BAKERSFIELD**
KAWEAH SUBSECTION
ALIGNMENT K4
STA. 2522+00 TO 2578+00
PLAN AND PROFILE

CONTRACT NO. HSR 06-0003
DRAWING NO. CB1139
SCALE AS SHOWN
SHEET NO. 10 OF 15

04/02/2014 - RFP No.: HSR 13-57

12/12/2013 8:59:45 PM c:\pwworking\hmm\external\paul.tonkin01-arup.com\d0125355\FB-CB-1139-K4.dgn paul.tonkin

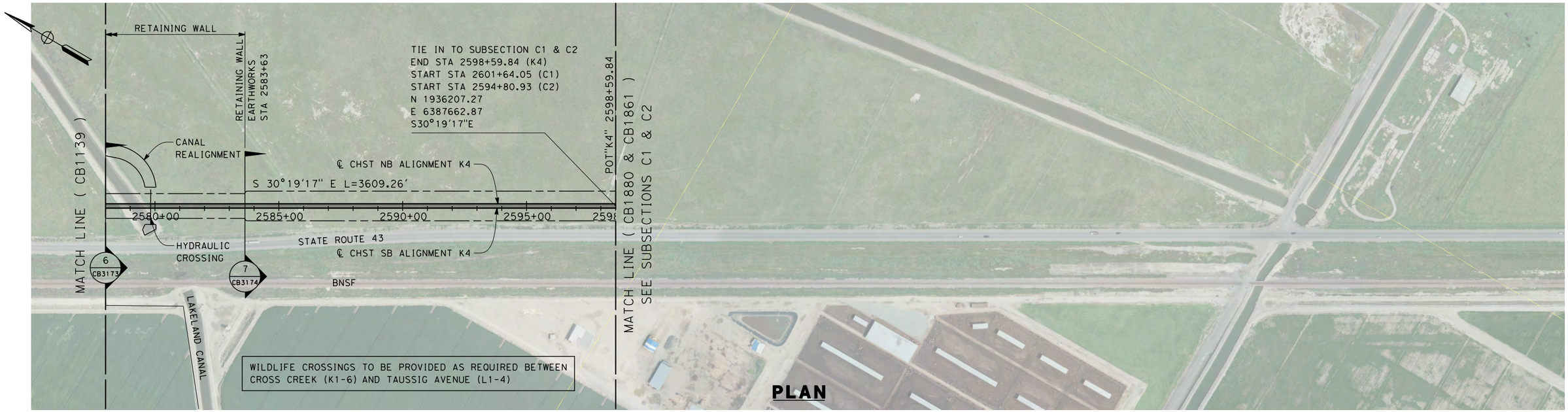


**PLAN**

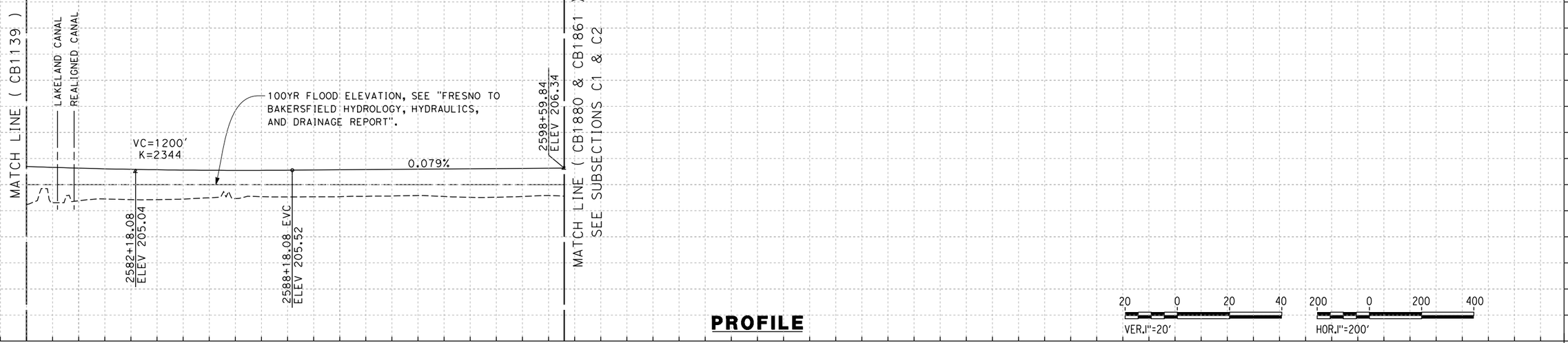


**PROFILE**

20 0 20 40 VER.1"=20'

200 0 200 400 HOR.1"=200'

| STATION | 2578+00 | 2580+00 | 2590+00 | 2598+60 | TOTAL |
|---|---|---|---|---|---|
| CY Exc | | | | | |
| CY Emb | | | | | |

| REV | DATE | BY | CHK | APP | DESCRIPTION |
|---|---|---|---|---|---|

DESIGNED BY A. POLING
DRAWN BY E. TANAKA
CHECKED BY K. SEYMOUR
IN CHARGE R. COFFIN
DATE 12/31/13

**RECORD SET 15% DESIGN SUBMISSION - NOT FOR CONSTRUCTION**

URS | HMM | ARUP
CALIFORNIA HIGH-SPEED TRAIN

CALIFORNIA HIGH-SPEED RAIL AUTHORITY

# CALIFORNIA HIGH-SPEED TRAIN PROJECT
# FRESNO TO BAKERSFIELD

KAWEAH SUBSECTION
ALIGNMENT K4
STA. 2578+00 TO 2598+60
PLAN AND PROFILE

CONTRACT NO. HSR 06-0003
DRAWING NO. CB1140
SCALE AS SHOWN
SHEET NO. 11 OF 15

04/02/2014 - RFP No.: HSR 13-57

12/12/2013 9:10:58 PM c:\pwworking\hmm\external\paul.tonkin01-arup.com\d0125355\FB-CB-1140-K4.dgn paul.tonkin

NOTES:

1. TRACKFORM SHOWN IS INDICATIVE
2. FOR STRUCTURE DIMENSIONS SEE STRUCTURAL CROSS SECTIONS
3. SUPERELEVATION IS NOT SHOWN. THE AMOUNT OF APPLIED SUPERELEVATION IS SHOWN IN CURVE DATA TABLES

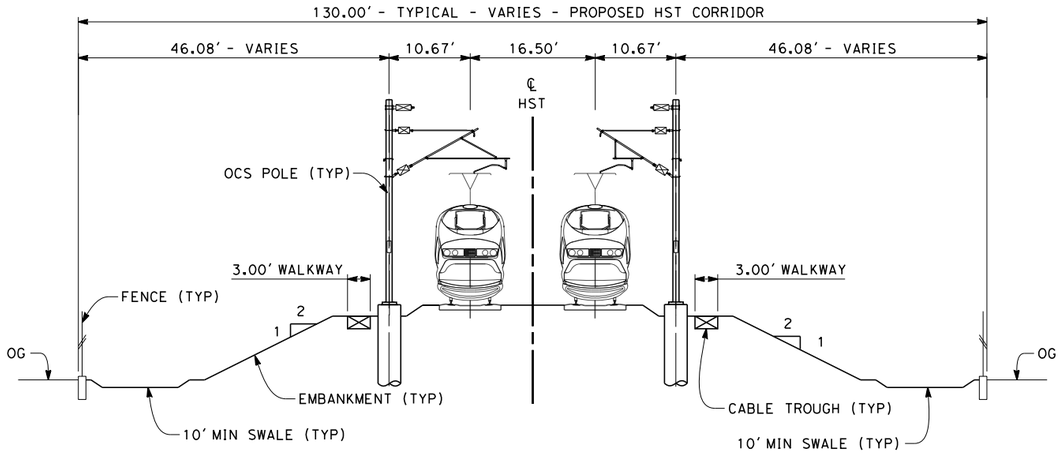


## SECTION 1

TWIN TRACK - AT-GRADE WITH OPEN DRAINAGE
STA 2074+96 THROUGH STA 2240+32
STA 2246+03 THROUGH STA 2436+00

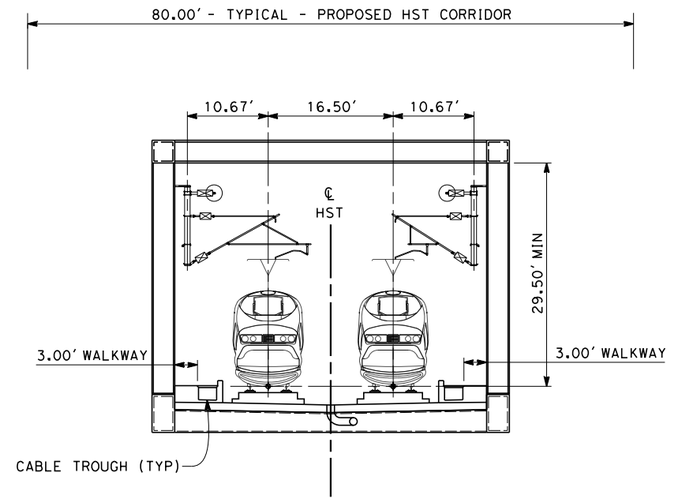


## SECTION 2

TWIN TRACK - AERIAL STEEL TRUSS
STA 2240+32 THROUGH STA 2246+03
STA 2479+23 THROUGH STA 2482+45

10 0 10 20
1"=10'

04/02/2014 - RFP No.: HSR 13-57

alexander.poling 12/12/2013 1:14:20 PM c:\pwworking\hmm\external\alexander.poling-arup.com\d0125355\FB-CB-3171-K4 .dgn

| REV | DATE | BY | CHK | APP | DESCRIPTION |
|---|---|---|---|---|---|

DESIGNED BY A. POLING
DRAWN BY E. TANAKA
CHECKED BY K. SEYMOUR
IN CHARGE R. COFFIN
DATE 12/31/13

**RECORD SET 15% DESIGN SUBMISSION - NOT FOR CONSTRUCTION**

URS | HMM | ARUP
CALIFORNIA HIGH-SPEED TRAIN

CALIFORNIA HIGH-SPEED RAIL AUTHORITY

**CALIFORNIA HIGH-SPEED TRAIN PROJECT**
**FRESNO TO BAKERSFIELD**
KAWEAH SUBSECTION
ALIGNMENT K4
TYPICAL SECTIONS

CONTRACT NO. HSR 06-0003
DRAWING NO. CB3171
SCALE AS SHOWN
SHEET NO. 12 OF 15

NOTES:

1. TRACKFORM SHOWN IS INDICATIVE
2. FOR STRUCTURE DIMENSIONS SEE STRUCTURAL CROSS SECTIONS
3. SUPERELEVATION IS NOT SHOWN. THE AMOUNT OF APPLIED SUPERELEVATION IS SHOWN IN CURVE DATA TABLES

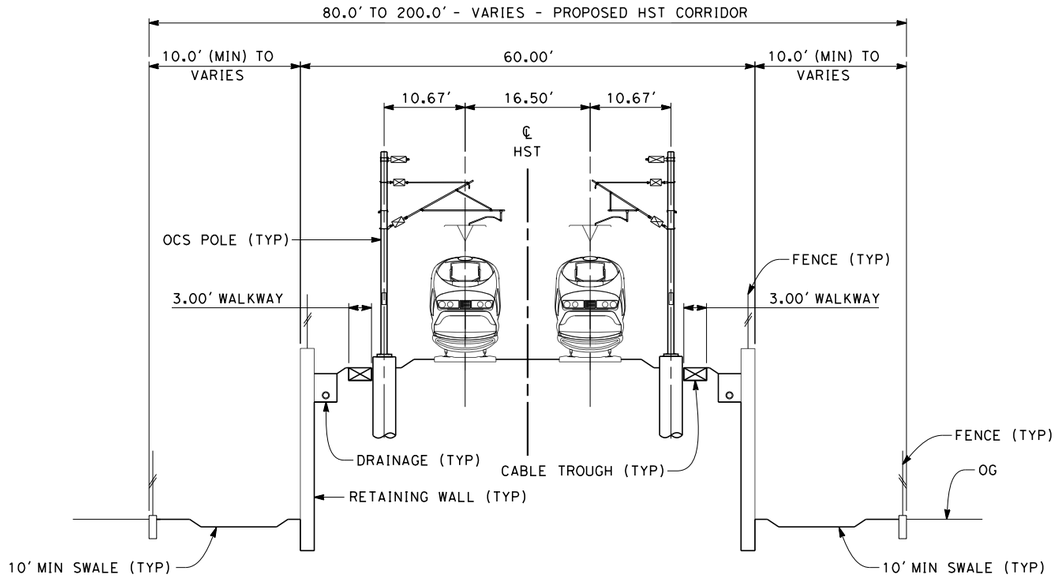


## SECTION 3

TWIN TRACK - RETAINED EMBANKMENT
STA 2436+00 THROUGH STA 2446+81

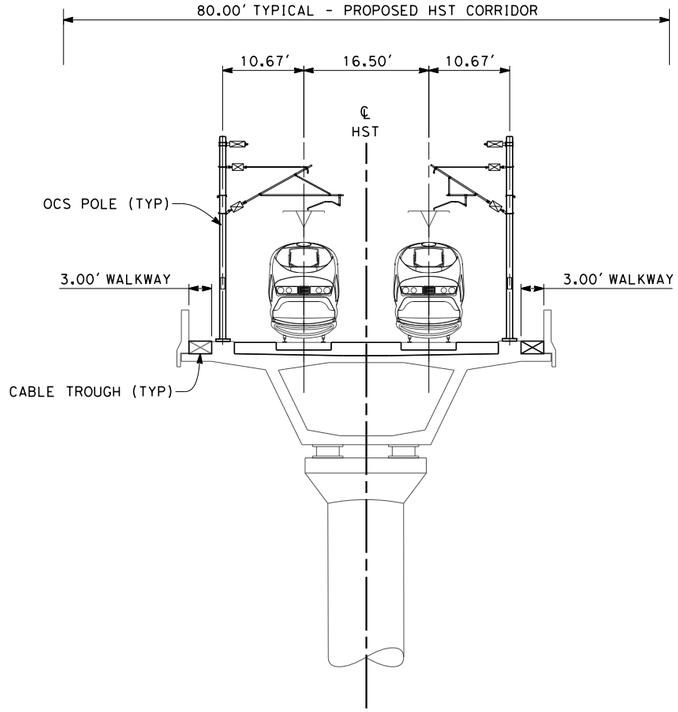


## SECTION 4

TWIN TRACK - AERIAL VIADUCT
STA 2446+81 THROUGH STA 2479+23
STA 2482+45 THROUGH STA 2529+86
STA 2535+11 THROUGH STA 2538+71

10 0 10 20
1"=10'

04/02/2014 - RFP No.: HSR 13-57

| REV | DATE | BY | CHK | APP | DESCRIPTION |
|---|---|---|---|---|---|

DESIGNED BY A. POLING
DRAWN BY E. TANAKA
CHECKED BY K. SEYMOUR
IN CHARGE R. COFFIN
DATE 12/31/13

**RECORD SET 15% DESIGN SUBMISSION - NOT FOR CONSTRUCTION**

URS | HMM | ARUP
CALIFORNIA HIGH-SPEED TRAIN

CALIFORNIA HIGH-SPEED RAIL AUTHORITY

**CALIFORNIA HIGH-SPEED TRAIN PROJECT**
**FRESNO TO BAKERSFIELD**
KAWEAH SUBSECTION
ALIGNMENT K4
TYPICAL SECTIONS

CONTRACT NO. HSR 06-0003
DRAWING NO. CB3172
SCALE AS SHOWN
SHEET NO. 13 OF 15

alexander.poling 12/12/2013 1:14:41 PM c:\pwworking\hmm\external\alexander.poling-arup.com\d0125355\FB-CB-3172-K4 .dgn

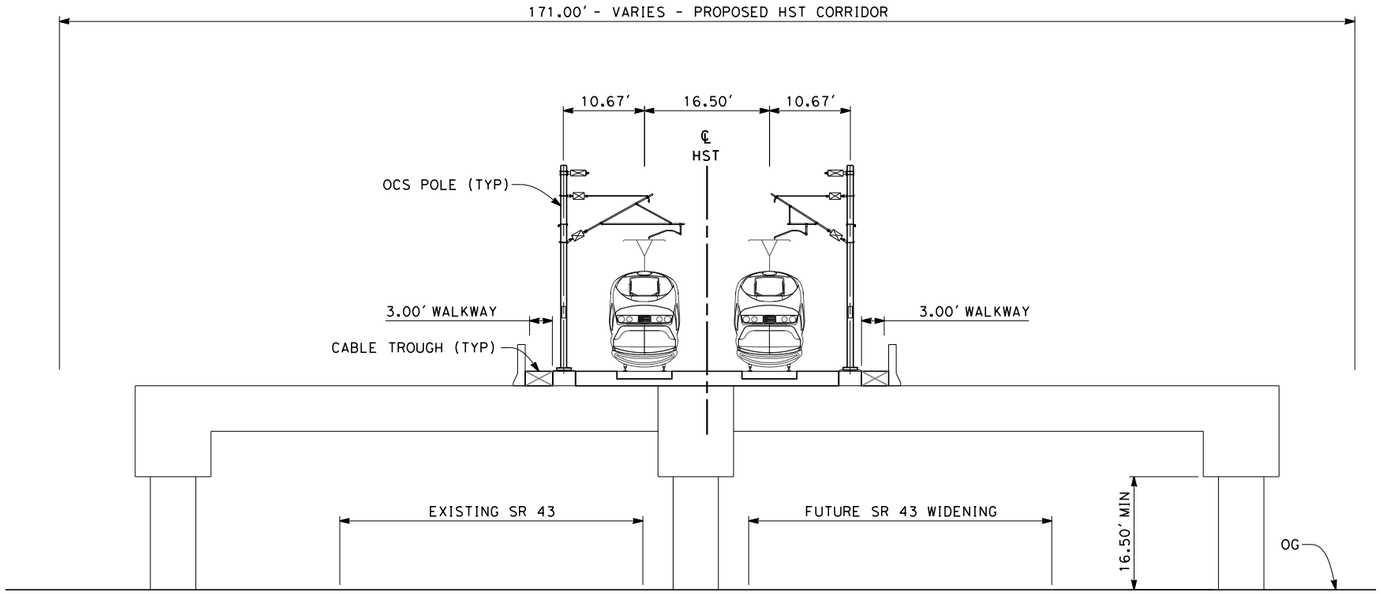


## SECTION 5

TWIN TRACK AERIAL STRUCTURE OVER SR 43
STA 2529+86 THROUGH STA 2535+11

NOTES:

1. TRACKFORM SHOWN IS INDICATIVE
2. FOR STRUCTURE DIMENSIONS SEE STRUCTURAL CROSS SECTIONS
3. SUPERELEVATION IS NOT SHOWN. THE AMOUNT OF APPLIED SUPERELEVATION IS SHOWN IN CURVE DATA TABLES
4. PER CALTRANS STANDRAD, A HIGHWAY BARRIER IS REQUIRED NEXT TO A COLUMN BY THE REQUIREMENTS SET FORTH IN THE HIGHWAY DESIGN MANUAL. PIER PROTECTION REQUIRED FROM STA 2529+86 THROUGH STA 2535+11.

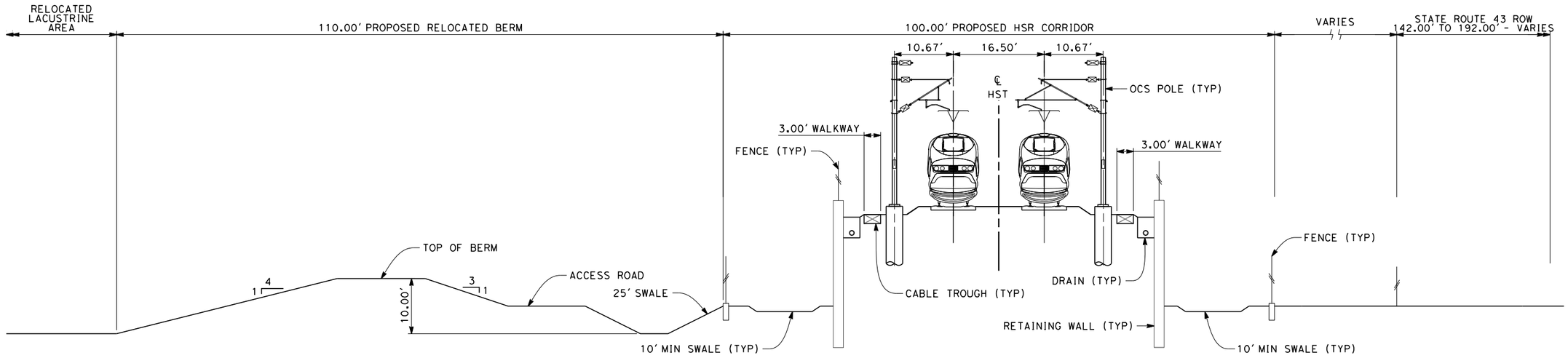


NOTE:
RELOCATED BERM PROPOSED FROM
STA 2534+10 THROUGH 2565+80

## SECTION 6

TWIN TRACK ON RETAINED EMBANKMENT ADJACENT TO SR 43
STA 2538+71 THROUGH STA 2583+63

10 0 10 20
1"=10'

| REV | DATE | BY | CHK | APP | DESCRIPTION |
|---|---|---|---|---|---|

DESIGNED BY A. POLING
DRAWN BY E. TANAKA
CHECKED BY K. SEYMOUR
IN CHARGE R. COFFIN
DATE 12/31/13

**RECORD SET 15% DESIGN SUBMISSION - NOT FOR CONSTRUCTION**

URS | HMM | ARUP
CALIFORNIA HIGH-SPEED TRAIN

CALIFORNIA HIGH-SPEED RAIL AUTHORITY

**CALIFORNIA HIGH-SPEED TRAIN PROJECT**
**FRESNO TO BAKERSFIELD**
KAWEAH SUBSECTION
ALIGNMENT K4
TYPICAL SECTIONS

CONTRACT NO. HSR 06-0003
DRAWING NO. CB3173
SCALE AS SHOWN
SHEET NO. 14 OF 15

**04/02/2014 - RFP No.: HSR 13-57**

alexander.poling 12/12/2013 1:15:02 PM c:\pwworking\hmm\external\alexander.poling-arup.com\d0125355\FB-CB-3173-K4 .dgn

NOTES:

1. TRACKFORM SHOWN IS INDICATIVE
2. FOR STRUCTURE DIMENSIONS SEE STRUCTURAL CROSS SECTIONS
3. SUPERELEVATION IS NOT SHOWN. THE AMOUNT OF APPLIED SUPERELEVATION IS SHOWN IN CURVE DATA TABLES

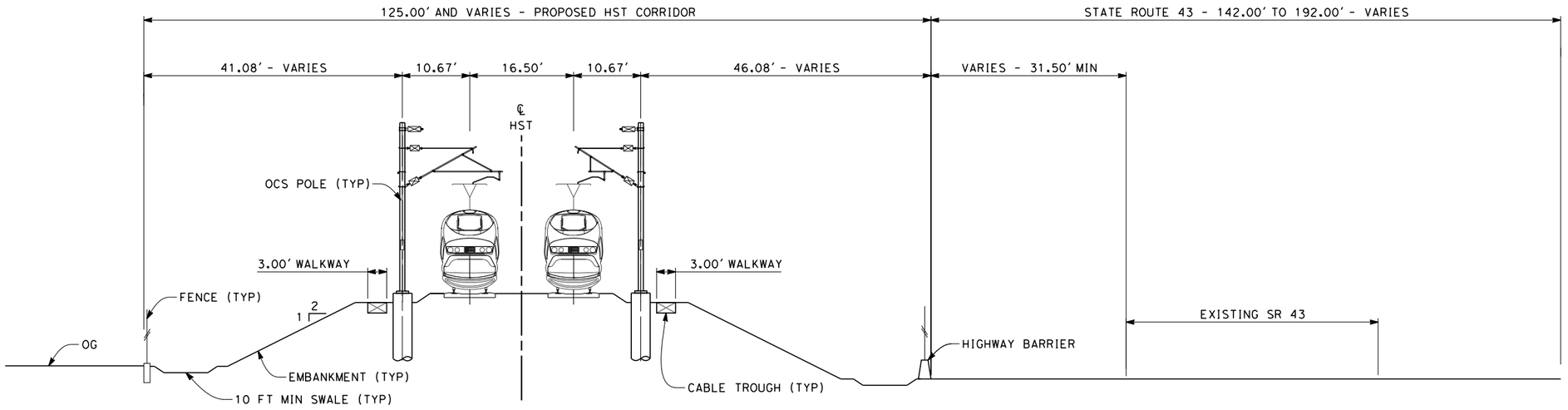


## SECTION 7

TWIN TRACK - ADJACENT TO SR 43
APPROX STA 2583+63 THROUGH STA 2598+60

10 0 10 20
1"=10'

04/02/2014 - RFP No.: HSR 13-57

| REV | DATE | BY | CHK | APP | DESCRIPTION |
|---|---|---|---|---|---|

DESIGNED BY A. POLING
DRAWN BY E. TANAKA
CHECKED BY K. SEYMOUR
IN CHARGE R. COFFIN
DATE 12/31/13

**RECORD SET 15% DESIGN SUBMISSION - NOT FOR CONSTRUCTION**

URS | HMM | ARUP
CALIFORNIA HIGH-SPEED TRAIN

CALIFORNIA HIGH-SPEED RAIL AUTHORITY

**CALIFORNIA HIGH-SPEED TRAIN PROJECT**
**FRESNO TO BAKERSFIELD**
KAWEAH SUBSECTION
ALIGNMENT K4
TYPICAL SECTIONS

CONTRACT NO. HSR 06-0003
DRAWING NO. CB3174
SCALE AS SHOWN
SHEET NO. 15 OF 15

alexander.poling 12/12/2013 1:15:24 PM c:\pwworking\hmm\external\alexander.poling-arup.com\d0125355\FB-CB-3174-K4 .dgn

| REV | DATE | BY | CHK | APP | DESCRIPTION |
|---|---|---|---|---|---|
| | | | | | |

DESIGNED BY S. LITSAS
DRAWN BY P. TONKIN
CHECKED BY K. SEYMOUR
IN CHARGE R. COFFIN
DATE 12/31/13

**RECORD SET 15% DESIGN SUBMISSION - NOT FOR CONSTRUCTION**

URS | HMM | ARUP
CALIFORNIA HIGH-SPEED TRAIN

CALIFORNIA
HIGH-SPEED RAIL AUTHORITY

# CALIFORNIA HIGH-SPEED TRAIN PROJECT
# FRESNO TO BAKERSFIELD

CORCORAN BYPASS SUBSECTION
ALIGNMENT C2
STA. 2954+81 TO 3096+00
KEY MAP

CONTRACT NO. HSR 06-0003
DRAWING NO. CB1850
SCALE AS SHOWN
SHEET NO. 1 OF 16

04/02/2014 - RFP No.: HSR 13-57

eron.sudhausen 12/9/2013 4:53:26 PM c:\pwworking\hmm\external\eron.sudhausen-arup.com\d0124906\FB-CB-1850-C2.dgn

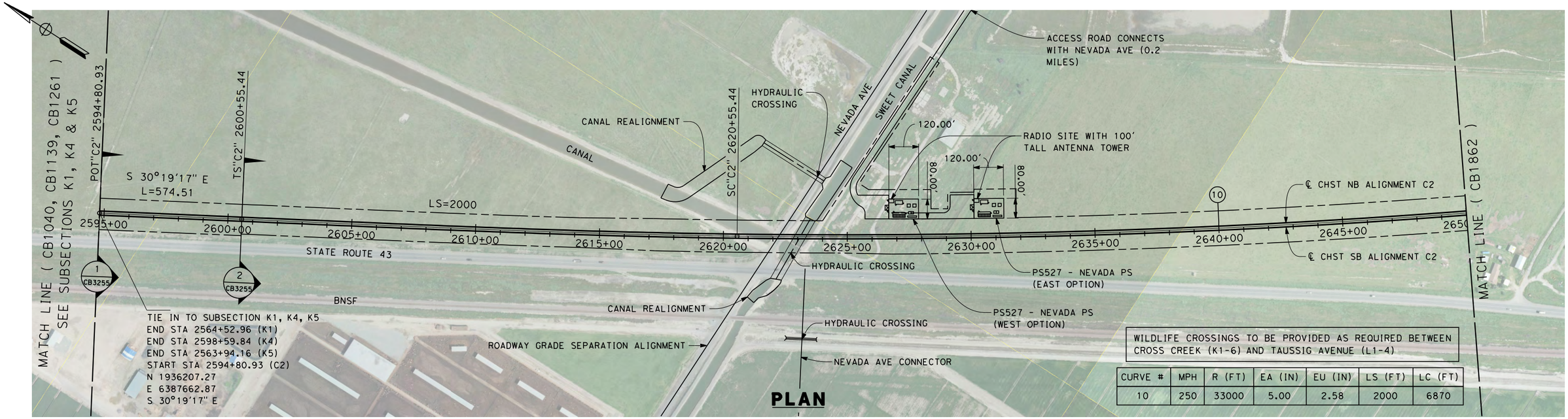


| CURVE # | MPH | R (FT) | EA (IN) | EU (IN) | LS (FT) | LC (FT) |
|---|---|---|---|---|---|---|
| 10 | 250 | 33000 | 5.00 | 2.58 | 2000 | 6870 |

**PLAN**

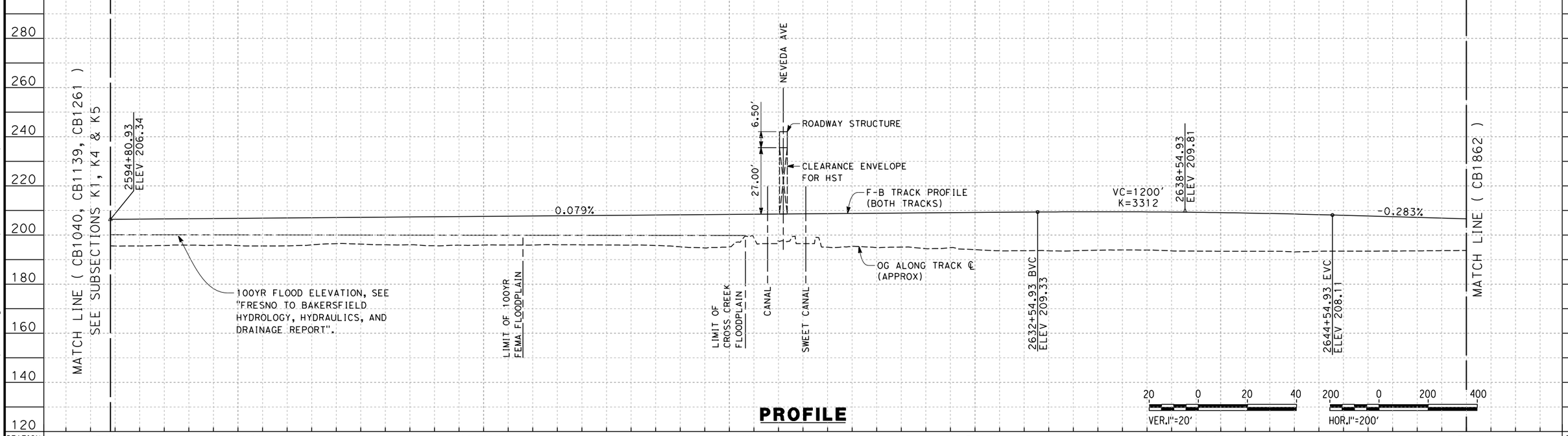


**PROFILE**

| STATION | 2594+81 | 2600+00 | 2610+00 | 2620+00 | 2630+00 | 2640+00 | 2650+00 | TOTAL |
|---|---|---|---|---|---|---|---|---|
| CY Exc | | | | | | | | |
| CY Emb | | | | | | | | |

| REV | DATE | BY | CHK | APP | DESCRIPTION |
|---|---|---|---|---|---|

DESIGNED BY S. LITSAS
DRAWN BY P. TONKIN
CHECKED BY K. SEYMOUR
IN CHARGE R. COFFIN
DATE 12/31/13

**RECORD SET 15% DESIGN SUBMISSION - NOT FOR CONSTRUCTION**

URS | HMM | ARUP
California High-Speed Train

CALIFORNIA HIGH-SPEED RAIL AUTHORITY

# CALIFORNIA HIGH-SPEED TRAIN PROJECT
## FRESNO TO BAKERSFIELD
CORORAN BYPASS SUBSECTION
ALIGNMENT C2
STA 2594+81 TO 2650+00
PLAN AND PROFILE

CONTRACT NO. HSR 06-0003
DRAWING NO. CB1861
SCALE AS SHOWN
SHEET NO. 2 OF 16

RFP No.: HSR 13-57
04/02/2014

12/12/2013 7:31:29 PM c:\pwworking\hmm\external\paul.tonkin01-arup.com\d0124906\FB-CB-1861-C2.dgn
paul.tonkin

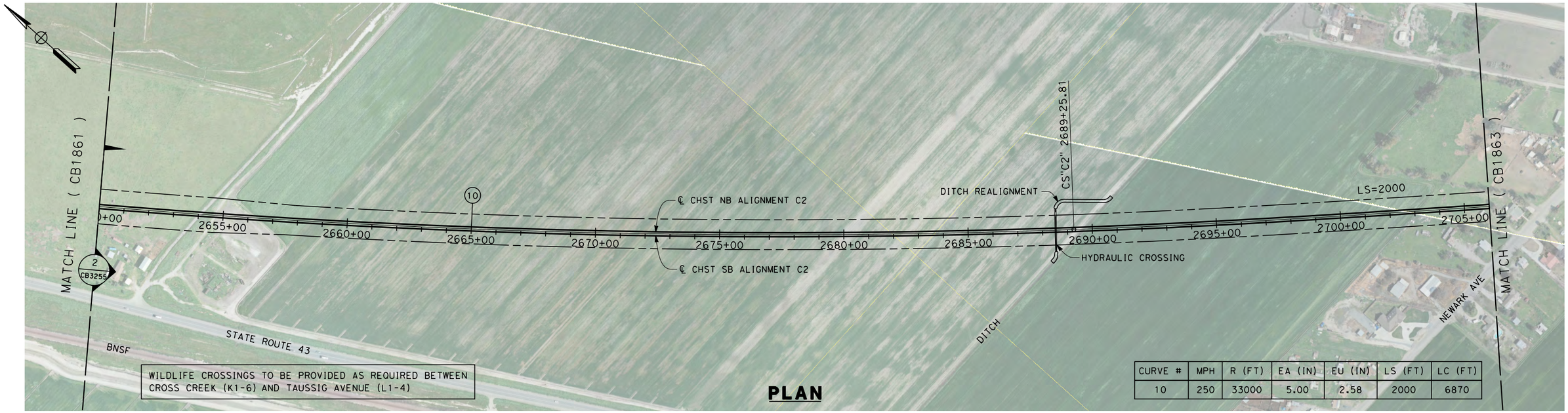


WILDLIFE CROSSINGS TO BE PROVIDED AS REQUIRED BETWEEN CROSS CREEK (K1-6) AND TAUSSIG AVENUE (L1-4)

**PLAN**

| CURVE # | MPH | R (FT) | EA (IN) | EU (IN) | LS (FT) | LC (FT) |
|---|---|---|---|---|---|---|
| 10 | 250 | 33000 | 5.00 | 2.58 | 2000 | 6870 |

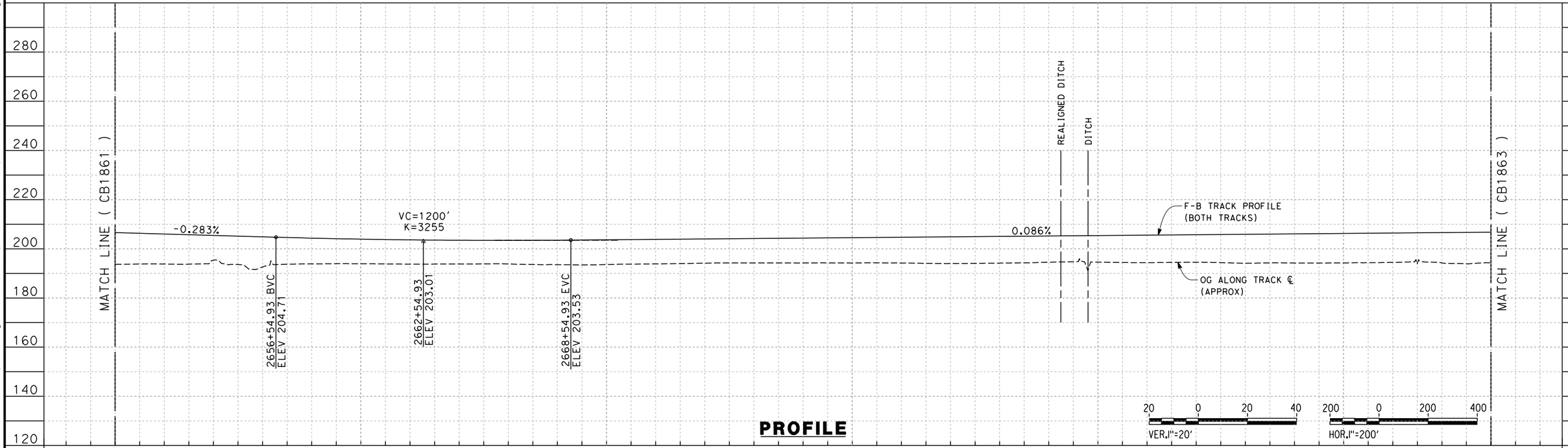


**PROFILE**

| STATION | 2650+00 | 2660+00 | 2670+00 | 2680+00 | 2690+00 | 2700+00 | 2706+00 | TOTAL |
|---|---|---|---|---|---|---|---|---|
| CY Exc | | | | | | | | |
| CY Emb | | | | | | | | |

| REV | DATE | BY | CHK | APP | DESCRIPTION |
|---|---|---|---|---|---|

DESIGNED BY S. LITSAS
DRAWN BY P. TONKIN
CHECKED BY K. SEYMOUR
IN CHARGE R. COFFIN
DATE 12/31/13

**RECORD SET 15% DESIGN SUBMISSION - NOT FOR CONSTRUCTION**

URS | HMM | ARUP
CALIFORNIA HIGH-SPEED TRAIN

CALIFORNIA HIGH-SPEED RAIL AUTHORITY

**CALIFORNIA HIGH-SPEED TRAIN PROJECT**
**FRESNO TO BAKERSFIELD**
CORCORAN BYAPSS SUBSECTION
ALIGNMENT C2
STA 2650+00 TO 2706+00
PLAN AND PROFILE

CONTRACT NO. HSR 06-0003
DRAWING NO. CB1862
SCALE AS SHOWN
SHEET NO. 3 OF 16

04/02/2014 - RFP No.: HSR 13-57

12/12/2013 7:33:25 PM c:\pwworking\hmm\external\paul.tonkin01-arup.com\d0124906\FB-CB-1862-C2.dgn paul.tonkin

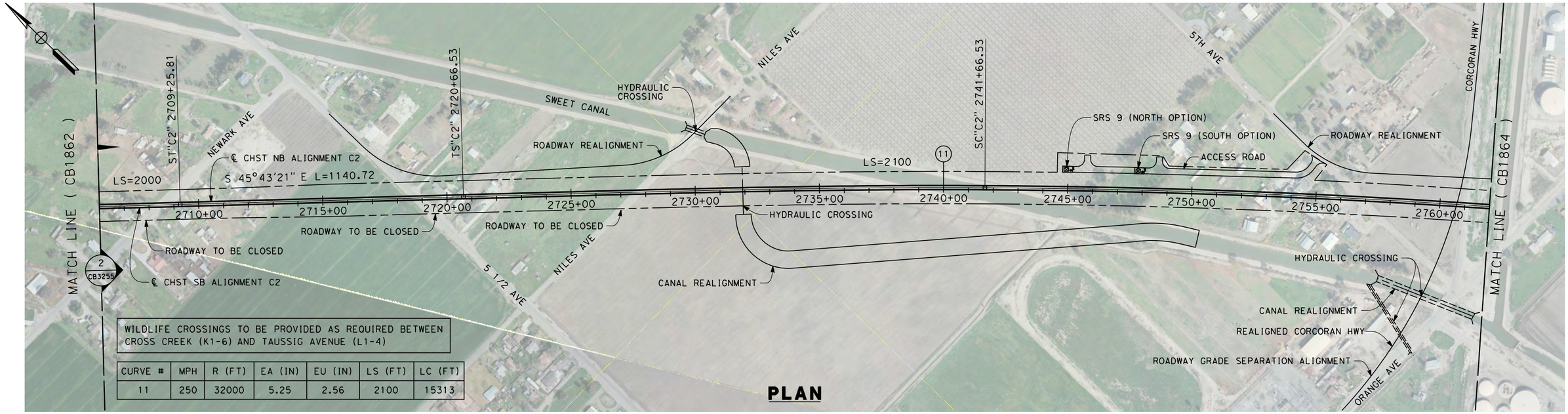


WILDLIFE CROSSINGS TO BE PROVIDED AS REQUIRED BETWEEN CROSS CREEK (K1-6) AND TAUSSIG AVENUE (L1-4)

| CURVE # | MPH | R (FT) | EA (IN) | EU (IN) | LS (FT) | LC (FT) |
|---|---|---|---|---|---|---|
| 11 | 250 | 32000 | 5.25 | 2.56 | 2100 | 15313 |

**PLAN**

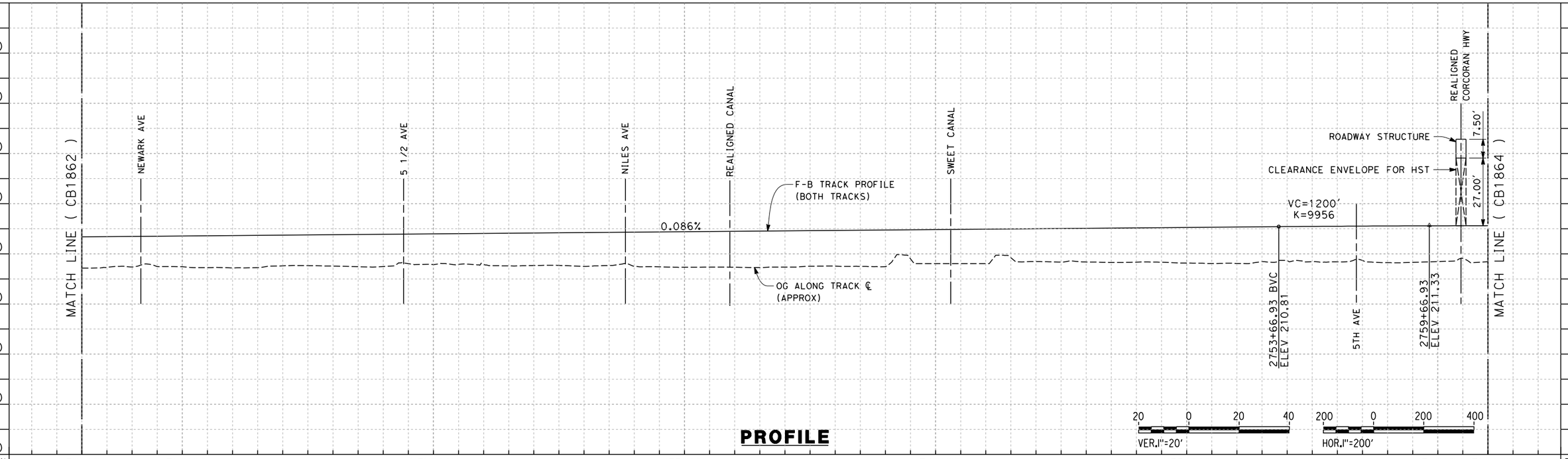


**PROFILE**

| STATION | 2706+00 | 2710+00 | 2720+00 | 2730+00 | 2740+00 | 2750+00 | 2760+00 | 2762+00 | TOTAL |
|---|---|---|---|---|---|---|---|---|---|
| CY Exc | | | | | | | | | |
| CY Emb | | | | | | | | | |

| REV | DATE | BY | CHK | APP | DESCRIPTION |
|---|---|---|---|---|---|

DESIGNED BY S. LITSAS
DRAWN BY P. TONKIN
CHECKED BY K. SEYMOUR
IN CHARGE R. COFFIN
DATE 12/31/13

**RECORD SET 15% DESIGN SUBMISSION - NOT FOR CONSTRUCTION**

URS | HMM | ARUP
CALIFORNIA HIGH-SPEED TRAIN

CALIFORNIA HIGH-SPEED RAIL AUTHORITY

# CALIFORNIA HIGH-SPEED TRAIN PROJECT FRESNO TO BAKERSFIELD

CORCORAN BYPASS SUBSECTION
ALIGNMENT C2
STA 2706+00 TO 2762+00
PLAN AND PROFILE

CONTRACT NO. HSR 06-0003
DRAWING NO. CB1863
SCALE AS SHOWN
SHEET NO. 4 OF 16

04/02/2014 - RFP No.: HSR 13-57

12/12/2013 7:35:24 PM c:\pwworking\hmm\external\paul.tonkin01-arup.com\d0124906\FB-CB-1863-C2.dgn
paul.tonkin

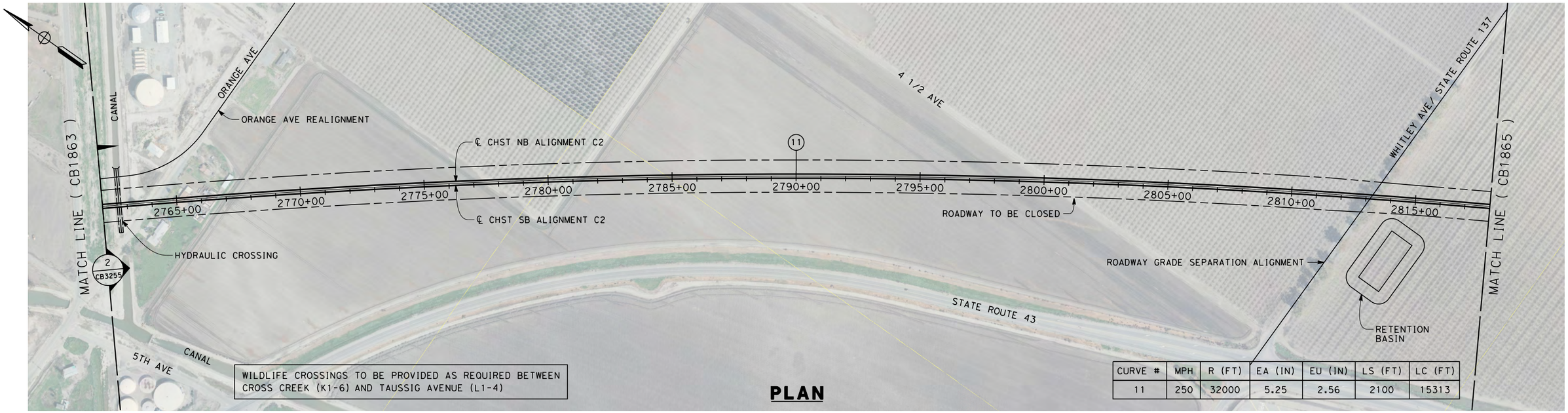


**PLAN**

| CURVE # | MPH | R (FT) | EA (IN) | EU (IN) | LS (FT) | LC (FT) |
|---|---|---|---|---|---|---|
| 11 | 250 | 32000 | 5.25 | 2.56 | 2100 | 15313 |

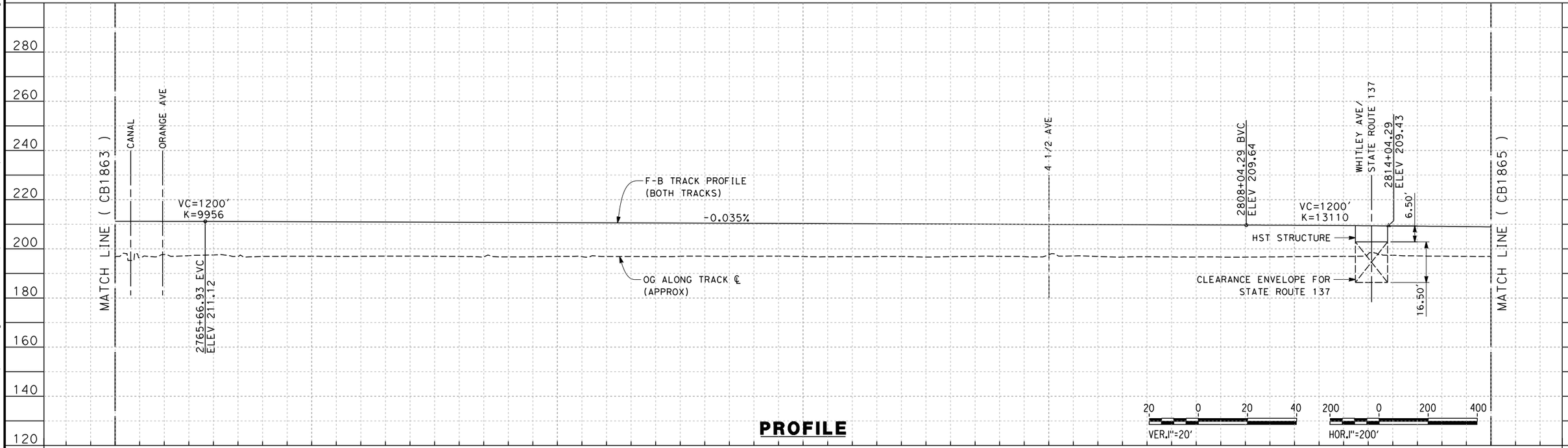


**PROFILE**

| REV | DATE | BY | CHK | APP | DESCRIPTION |
|---|---|---|---|---|---|

DESIGNED BY S. LITSAS
DRAWN BY P. TONKIN
CHECKED BY K. SEYMOUR
IN CHARGE R. COFFIN
DATE 12/31/13

**RECORD SET 15% DESIGN SUBMISSION - NOT FOR CONSTRUCTION**

URS | HMM | ARUP
CALIFORNIA HIGH-SPEED TRAIN

CALIFORNIA HIGH-SPEED RAIL AUTHORITY

# CALIFORNIA HIGH-SPEED TRAIN PROJECT
# FRESNO TO BAKERSFIELD
CORCORAN BYPASS SUBSECTION
ALIGNMENT C2
STA 2762+00 TO 2818+00
PLAN AND PROFILE

CONTRACT NO. HSR 06-0003
DRAWING NO. CB1864
SCALE AS SHOWN
SHEET NO. 5 OF 16

04/02/2014 - RFP No.: HSR 13-57

12/12/2013 7:37:19 PM c:\pwworking\hmm\external\paul.tonkin01-arup.com\d0124906\FB-CB-1864-C2.dgn paul.tonkin

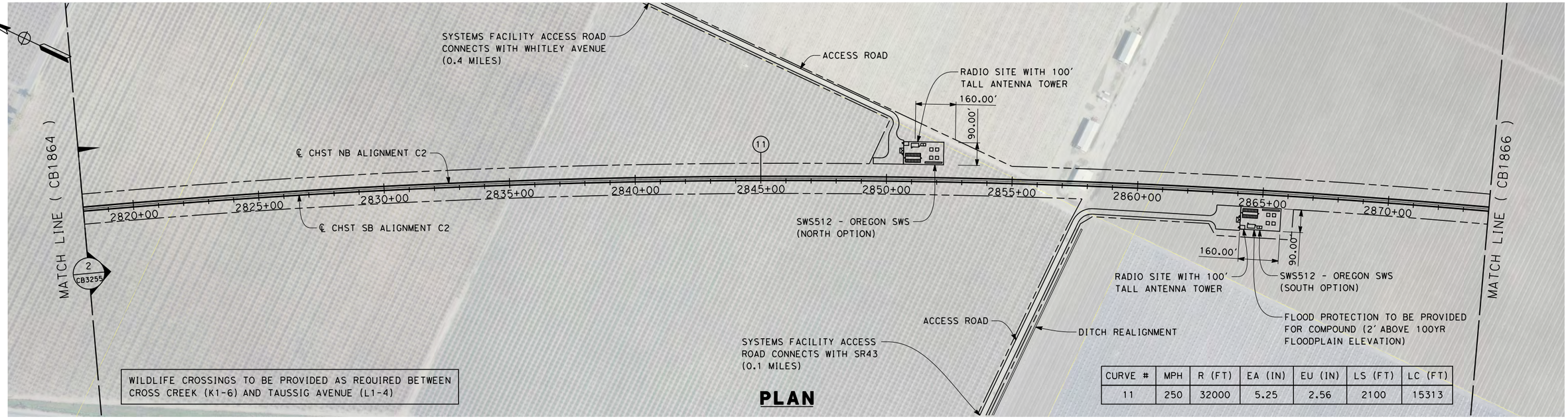


**PLAN**

| CURVE # | MPH | R (FT) | EA (IN) | EU (IN) | LS (FT) | LC (FT) |
|---|---|---|---|---|---|---|
| 11 | 250 | 32000 | 5.25 | 2.56 | 2100 | 15313 |

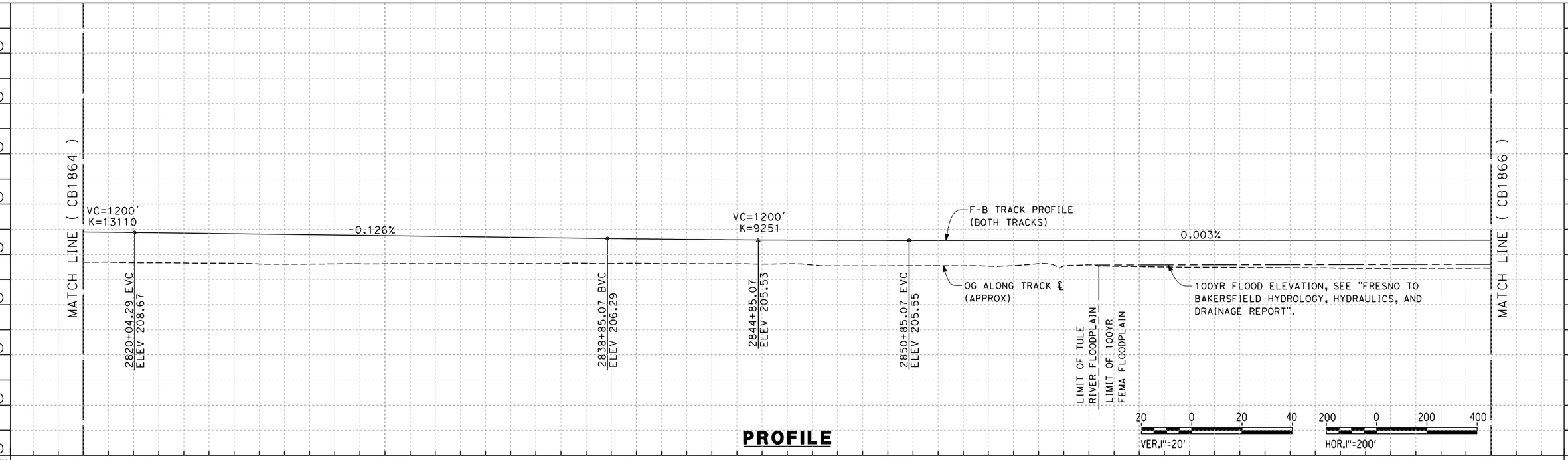


**PROFILE**

| STATION | 2818+00 | 2820+00 | 2830+00 | 2840+00 | 2850+00 | 2860+00 | 2870+00 | 2874+00 | TOTAL |
|---|---|---|---|---|---|---|---|---|---|
| CY Exc | | | | | | | | | |
| CY Emb | | | | | | | | | |

| REV | DATE | BY | CHK | APP | DESCRIPTION |
|---|---|---|---|---|---|

DESIGNED BY S. LITSAS
DRAWN BY P. TONKIN
CHECKED BY K. SEYMOUR
IN CHARGE R. COFFIN
DATE 12/31/13

**RECORD SET 15% DESIGN SUBMISSION - NOT FOR CONSTRUCTION**

URS | HMM | ARUP
CALIFORNIA HIGH-SPEED TRAIN

CALIFORNIA HIGH-SPEED RAIL AUTHORITY

**CALIFORNIA HIGH-SPEED TRAIN PROJECT**
**FRESNO TO BAKERSFIELD**
CORCORAN BYPASS SUBSECTION
ALIGNMENT C2
STA 2818+00 TO 2874+00
PLAN AND PROFILE

CONTRACT NO. HSR 06-0003
DRAWING NO. CB1865
SCALE AS SHOWN
SHEET NO. 6 OF 16

04/02/2014 - RFP No.: HSR 13-57

12/12/2013 7:39:33 PM c:\pwworking\hmm\external\paul.tonkin01-arup.com\d0124906\FB-CB-1865-C2.dgn paul.tonkin

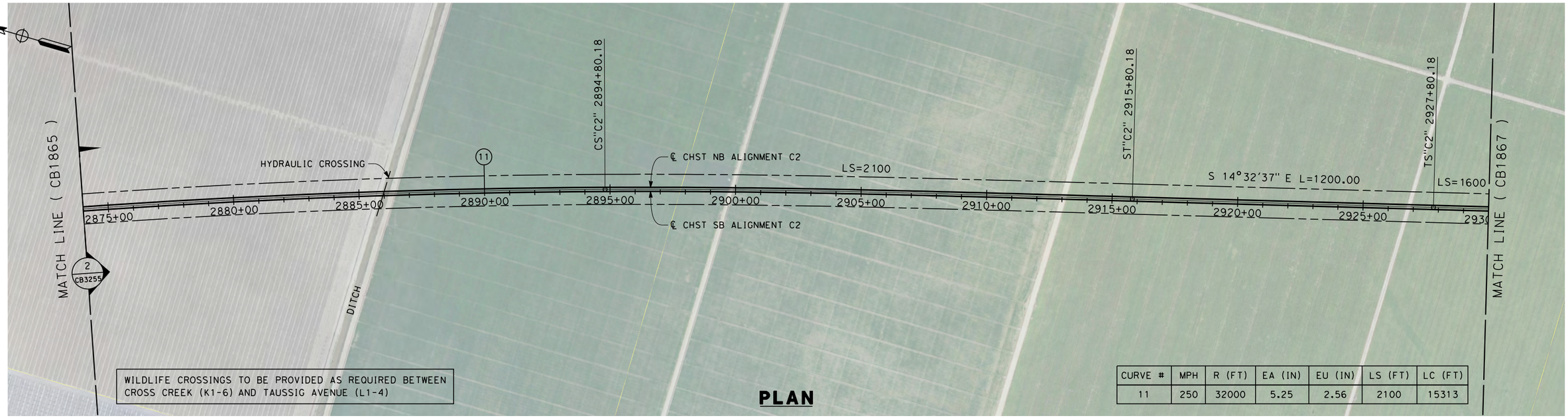


**PLAN**

| CURVE # | MPH | R (FT) | EA (IN) | EU (IN) | LS (FT) | LC (FT) |
|---|---|---|---|---|---|---|
| 11 | 250 | 32000 | 5.25 | 2.56 | 2100 | 15313 |

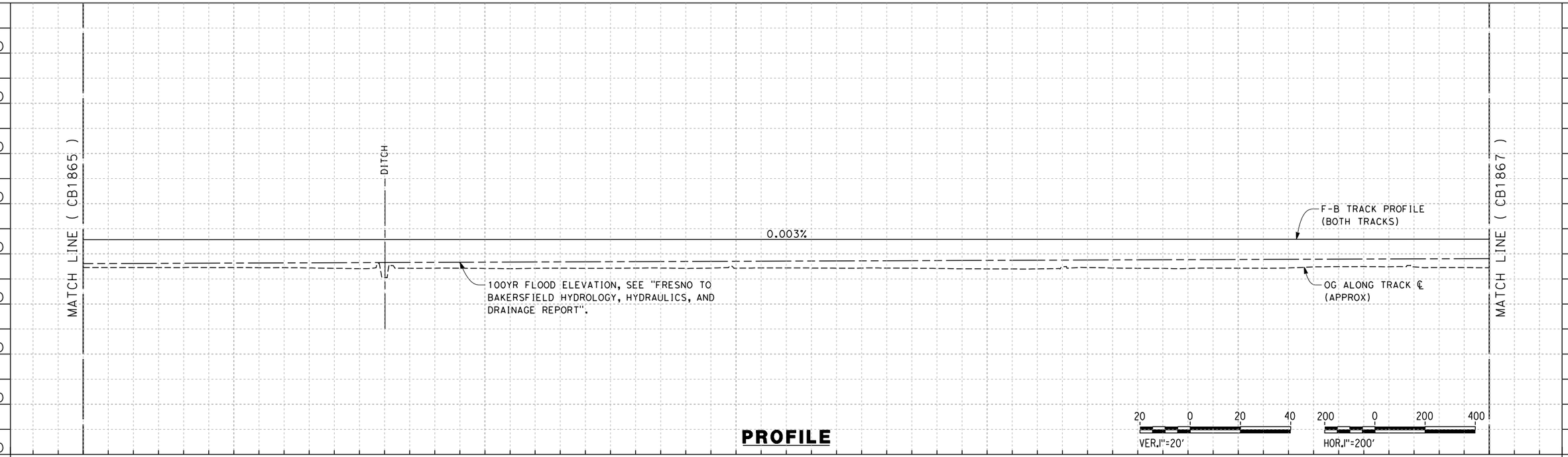


**PROFILE**

| REV | DATE | BY | CHK | APP | DESCRIPTION |
|---|---|---|---|---|---|

DESIGNED BY S. LITSAS
DRAWN BY P. TONKIN
CHECKED BY K. SEYMOUR
IN CHARGE R. COFFIN
DATE 12/31/13

**RECORD SET 15% DESIGN SUBMISSION - NOT FOR CONSTRUCTION**

URS | HMM | ARUP
CALIFORNIA HIGH-SPEED TRAIN

CALIFORNIA HIGH-SPEED RAIL AUTHORITY

# CALIFORNIA HIGH-SPEED TRAIN PROJECT
## FRESNO TO BAKERSFIELD
CORCORAN BYPASS SUBSECTION
ALIGNMENT C2
STA 2874+00 TO 2930+00
PLAN AND PROFILE

CONTRACT NO. HSR 06-0003
DRAWING NO. CB1866
SCALE AS SHOWN
SHEET NO. 7 OF 16

04/02/2014 - RFP No.: HSR 13-57

12/12/2013 7:41:15 PM c:\pwworking\hmm\external\paul.tonkin01-arup.com\d0124906\FB-CB-1866-C2.dgn paul.tonkin

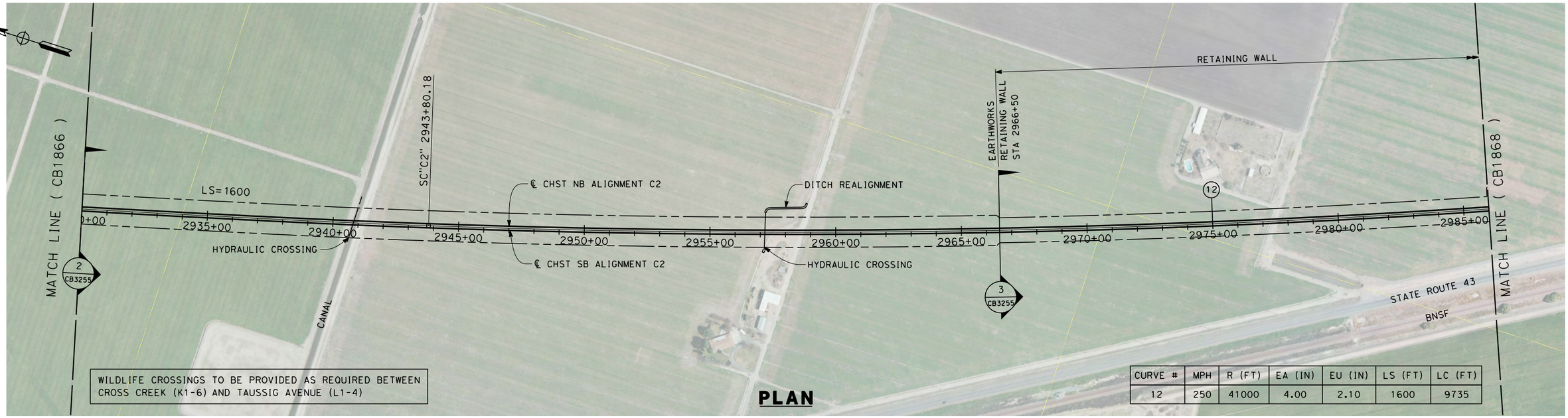


WILDLIFE CROSSINGS TO BE PROVIDED AS REQUIRED BETWEEN CROSS CREEK (K1-6) AND TAUSSIG AVENUE (L1-4)

**PLAN**

| CURVE # | MPH | R (FT) | EA (IN) | EU (IN) | LS (FT) | LC (FT) |
|---|---|---|---|---|---|---|
| 12 | 250 | 41000 | 4.00 | 2.10 | 1600 | 9735 |

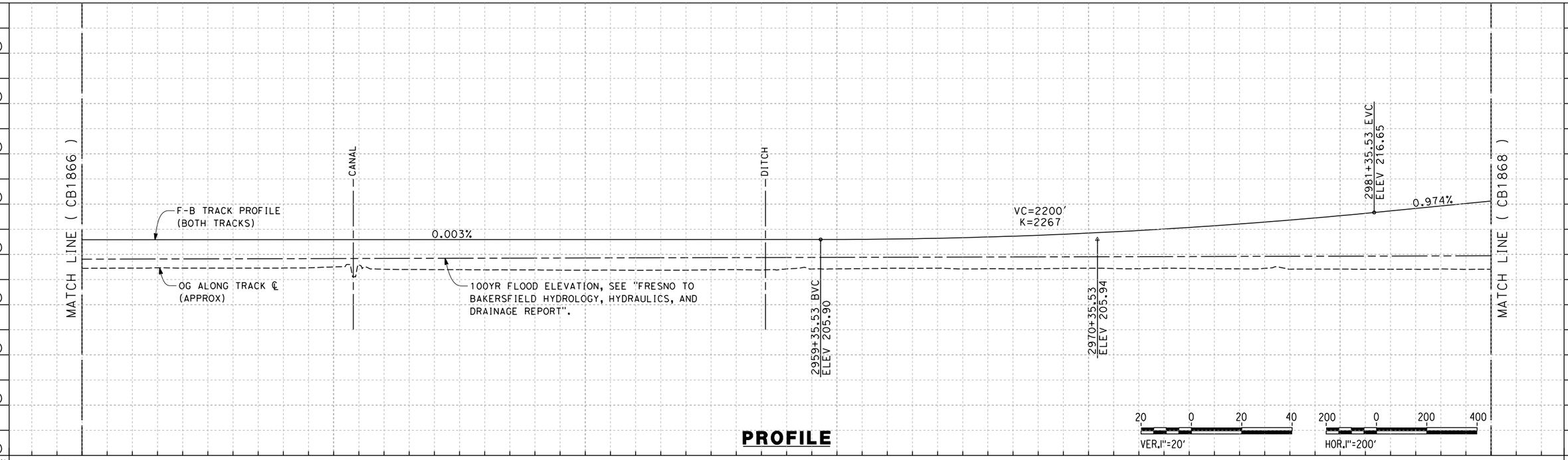


**PROFILE**

| STATION | 2930+00 | 2940+00 | 2950+00 | 2960+00 | 2970+00 | 2980+00 | 2986+00 | TOTAL |
|---|---|---|---|---|---|---|---|---|
| CY Exc | | | | | | | | |
| CY Emb | | | | | | | | |

| REV | DATE | BY | CHK | APP | DESCRIPTION |
|---|---|---|---|---|---|

DESIGNED BY S. LITSAS
DRAWN BY P. TONKIN
CHECKED BY K. SEYMOUR
IN CHARGE R. COFFIN
DATE 12/31/13

**RECORD SET 15% DESIGN SUBMISSION - NOT FOR CONSTRUCTION**

URS | HMM | ARUP
CALIFORNIA HIGH-SPEED TRAIN

CALIFORNIA HIGH-SPEED RAIL AUTHORITY

**CALIFORNIA HIGH-SPEED TRAIN PROJECT**
**FRESNO TO BAKERSFIELD**
CORCORAN BYPASS SUBSECTION
ALIGNMENT C2
STA 2930+00 TO 2986+00
PLAN AND PROFILE

CONTRACT NO. HSR 06-0003
DRAWING NO. CB1867
SCALE AS SHOWN
SHEET NO. 8 OF 16

04/02/2014 - RFP No.: HSR 13-57

12/12/2013 7:43:14 PM c:\pwworking\hmm\external\paul.tonkin01-arup.com\d0124906\FB-CB-1867-C2.dgn paul.tonkin

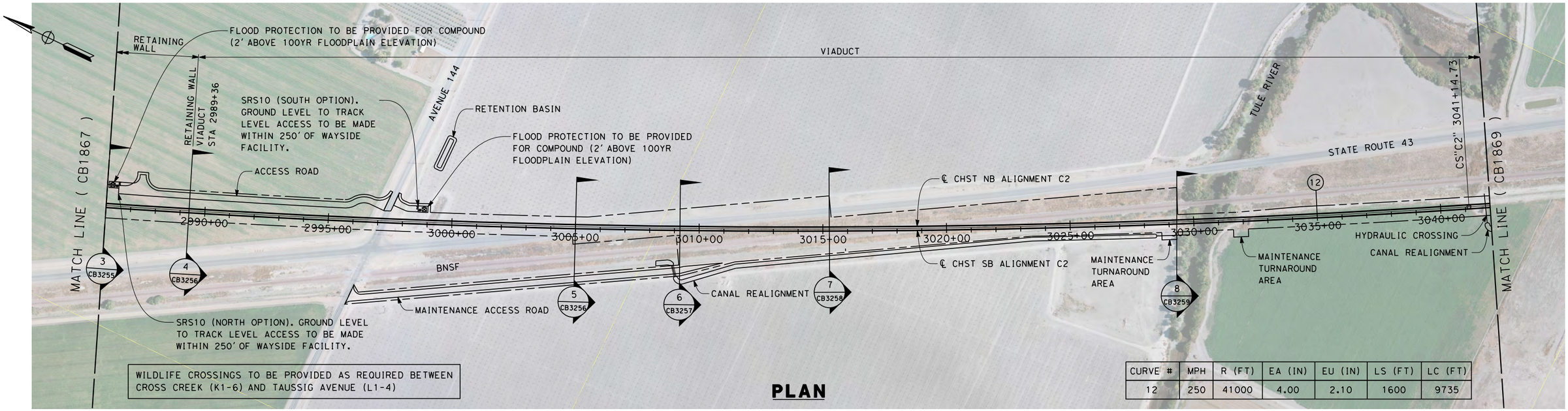


| CURVE # | MPH | R (FT) | EA (IN) | EU (IN) | LS (FT) | LC (FT) |
|---|---|---|---|---|---|---|
| 12 | 250 | 41000 | 4.00 | 2.10 | 1600 | 9735 |

**PLAN**

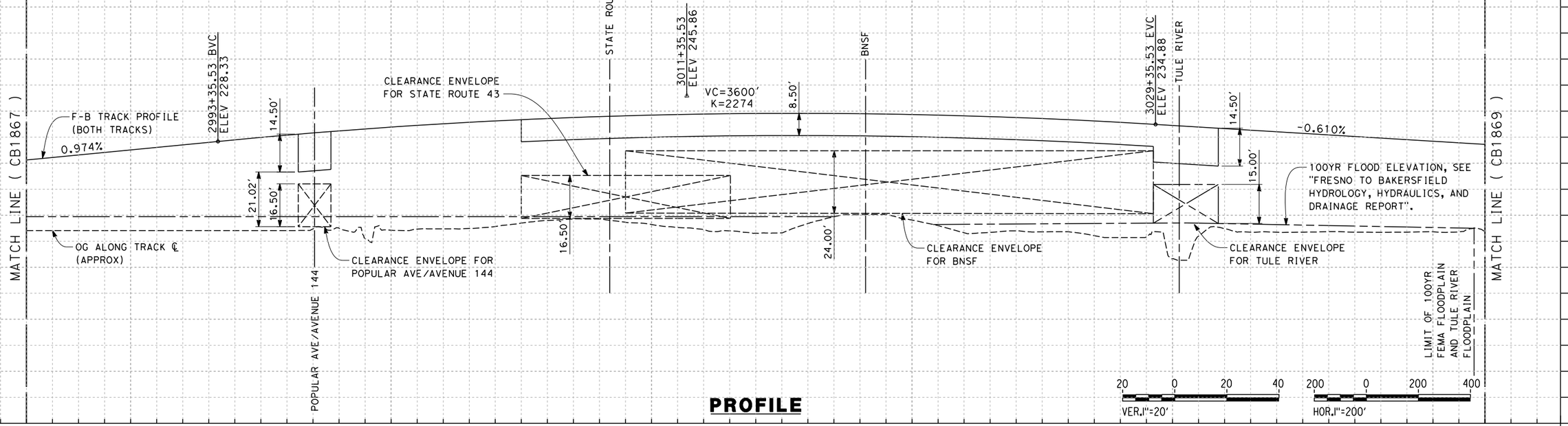


**PROFILE**

| STATION | 2986+00 | 2990+00 | 3000+00 | 3010+00 | 3020+00 | 3030+00 | 3040+00 | 3042+00 | TOTAL |
|---|---|---|---|---|---|---|---|---|---|
| CY Exc | | | | | | | | | |
| CY Emb | | | | | | | | | |

| REV | DATE | BY | CHK | APP | DESCRIPTION |
|---|---|---|---|---|---|

DESIGNED BY S. LITSAS
DRAWN BY P. TONKIN
CHECKED BY K. SEYMOUR
IN CHARGE R. COFFIN
DATE 12/31/13

**RECORD SET 15% DESIGN SUBMISSION - NOT FOR CONSTRUCTION**

URS | HMM | ARUP
CALIFORNIA HIGH-SPEED TRAIN

CALIFORNIA HIGH-SPEED RAIL AUTHORITY

**CALIFORNIA HIGH-SPEED TRAIN PROJECT**
**FRESNO TO BAKERSFIELD**
CORCORAN BYPASS SUBSECTION
ALIGNMENT C2
STA 2986+00 TO 3042+00
PLAN AND PROFILE

CONTRACT NO. HSR 06-0003
DRAWING NO. CB1868
SCALE AS SHOWN
SHEET NO. 9 OF 16

04/02/2014 - RFP No.: HSR 13-57

12/12/2013 7:44:38 PM c:\pwworking\hmm\external\paul.tonkin01-arup.com\d0124906\FB-CB-1868-C2.dgn paul.tonkin

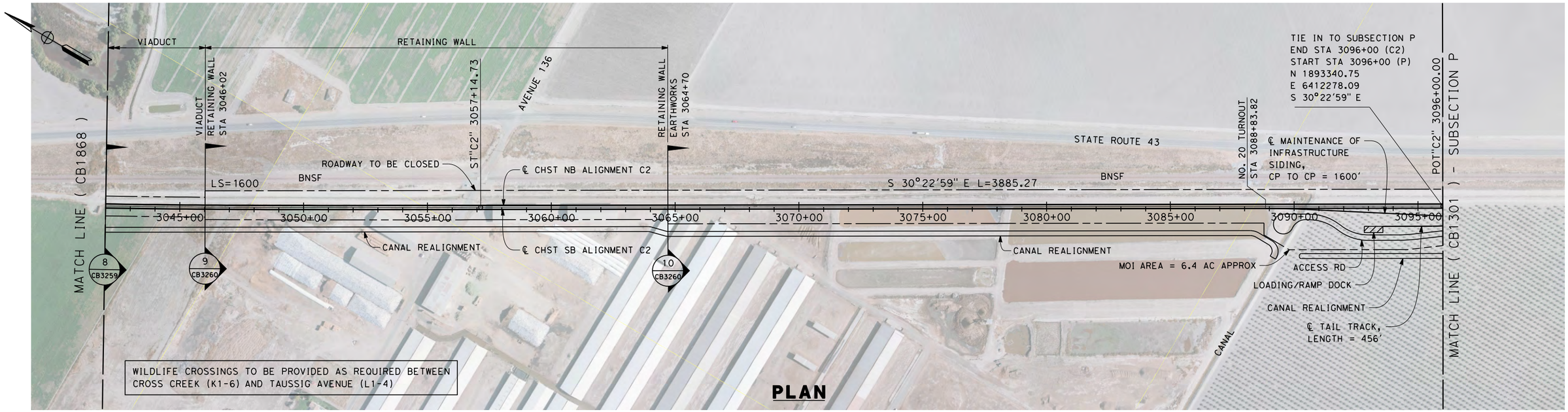


## PLAN

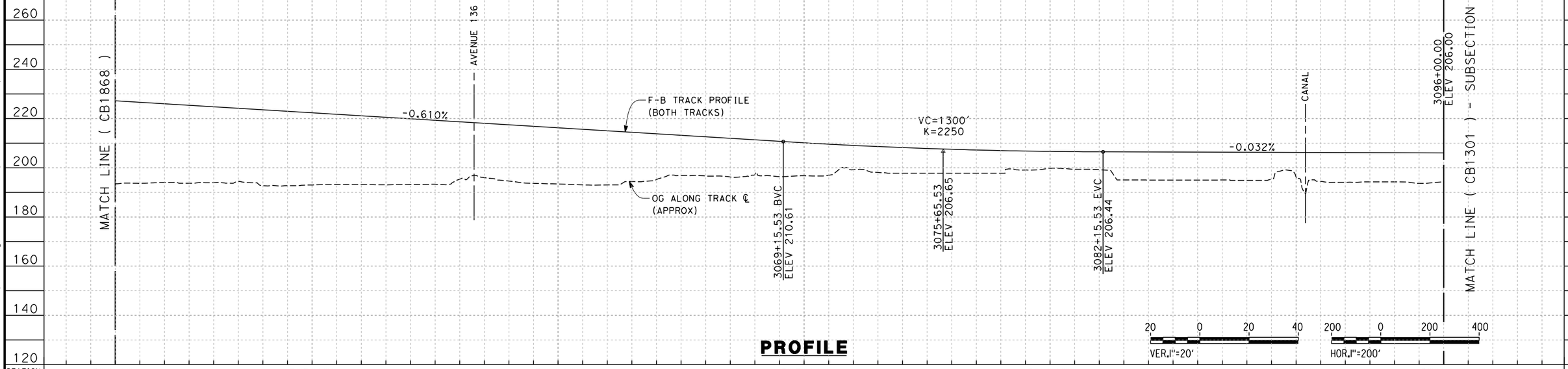


## PROFILE

| REV | DATE | BY | CHK | APP | DESCRIPTION |
|---|---|---|---|---|---|

DESIGNED BY S. LITSAS
DRAWN BY P. TONKIN
CHECKED BY K. SEYMOUR
IN CHARGE R. COFFIN
DATE 12/31/13

**RECORD SET 15% DESIGN SUBMISSION - NOT FOR CONSTRUCTION**

URS | HMM | ARUP
CALIFORNIA HIGH-SPEED TRAIN

CALIFORNIA HIGH-SPEED RAIL AUTHORITY

**CALIFORNIA HIGH-SPEED TRAIN PROJECT**
**FRESNO TO BAKERSFIELD**
CORCORAN BYPASS SUBSECTION
ALIGNMENT C2
STA 3042+00 TO 3096+00
PLAN AND PROFILE

CONTRACT NO. HSR 06-0003
DRAWING NO. CB1869
SCALE AS SHOWN
SHEET NO. 10 OF 16

04/02/2014 - RFP No.: HSR 13-57

12/12/2013 7:46:02 PM c:\pwworking\hmm\external\paul.tonkin01-arup.com\d0124906\FB-CB-1869-C2.dgn paul.tonkin

NOTES:

1. TRACKFORM SHOWN IS INDICATIVE
2. FOR STRUCTURE DIMENSIONS SEE STRUCTURAL CROSS SECTIONS
3. SUPERELEVATION IS NOT SHOWN. THE AMOUNT OF APPLIED SUPERELEVATION IS SHOWN IN THE CURVE DATA TABLES.

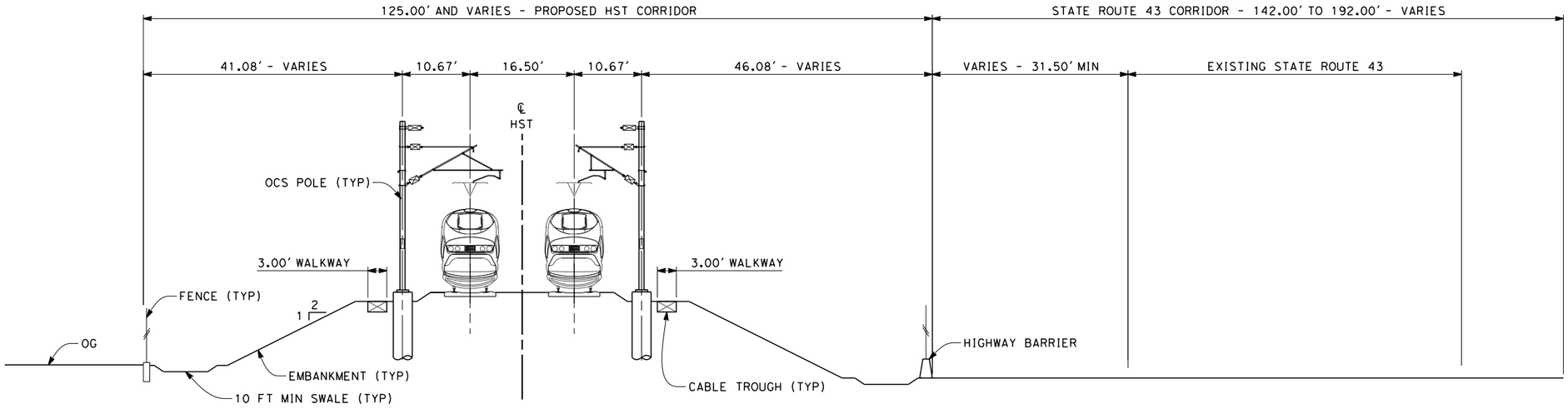


## SECTION 1

TWIN TRACK - AT-GRADE ADJACENT TO STATE ROUTE 43
STA 2594+81 THROUGH STA 2600+55

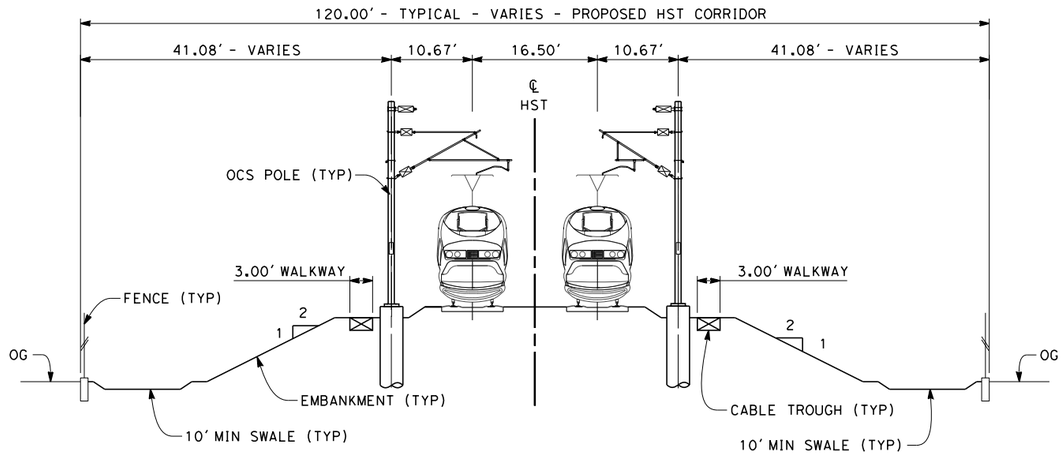


## SECTION 2

TWIN TRACK - AT-GRADE WITH OPEN DRAINAGE
STA 2600+55 THROUGH STA 2966+50

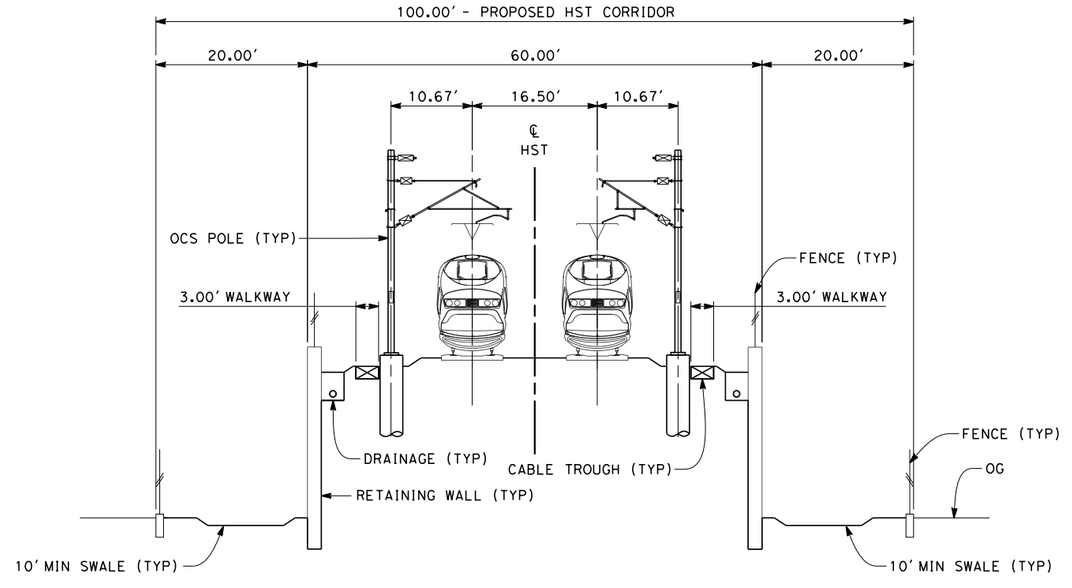


## SECTION 3

TWIN TRACK - RETAINED EMBANKMENT
STA 2966+50 THROUGH STA 2989+36

10 0 10 20
1"=10'

04/02/2014 - RFP No.: HSR 13-57

| REV | DATE | BY | CHK | APP | DESCRIPTION |
|---|---|---|---|---|---|

DESIGNED BY S. LITSAS
DRAWN BY P. TONKIN
CHECKED BY K. SEYMOUR
IN CHARGE R. COFFIN
DATE 12/31/13

RECORD SET 15% DESIGN SUBMISSION - NOT FOR CONSTRUCTION

URS | HMM | ARUP
CALIFORNIA HIGH-SPEED TRAIN

CALIFORNIA HIGH-SPEED RAIL AUTHORITY

**CALIFORNIA HIGH-SPEED TRAIN PROJECT**
**FRESNO TO BAKERSFIELD**
CORCORAN BYPASS SUBSECTION
ALIGNMENT C2
TYPICAL SECTIONS

CONTRACT NO. HSR 06-0003
DRAWING NO. CB3255
SCALE AS SHOWN
SHEET NO. 11 OF 16

paul.tonkin 12/12/2013 7:46:42 PM c:\pwworking\hmm\external\paul.tonkin01-arup.com\d0124906\FB-CB-3255-C2.dgn

NOTES:

1. TRACKFORM SHOWN IS INDICATIVE
2. FOR STRUCTURE DIMENSIONS SEE STRUCTURAL CROSS SECTIONS
3. SUPERELEVATION IS NOT SHOWN. THE AMOUNT OF APPLIED SUPERELEVATION IS SHOWN IN THE CURVE DATA TABLES.
4. PER CALTRANS HIGHWAY DESIGN MANUAL REQUIREMENTS, A HIGHWAY BARRIER IS REQUIRED WHEN ADEQUATE HORIZONTAL CLEARANCE BETWEEN ROADWAY TRAVELED WAY AND HST STRUCTURE COLUMN IS NOT MET. STA 3001+35 TO 3029+20

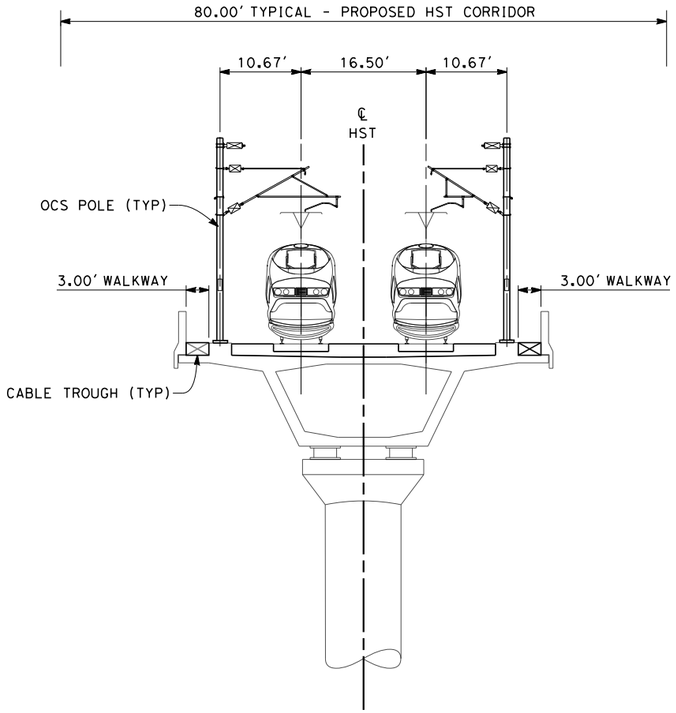


## SECTION 4

TWIN TRACK - AERIAL VIADUCT
STA 2989+36 THROUGH STA 3005+00

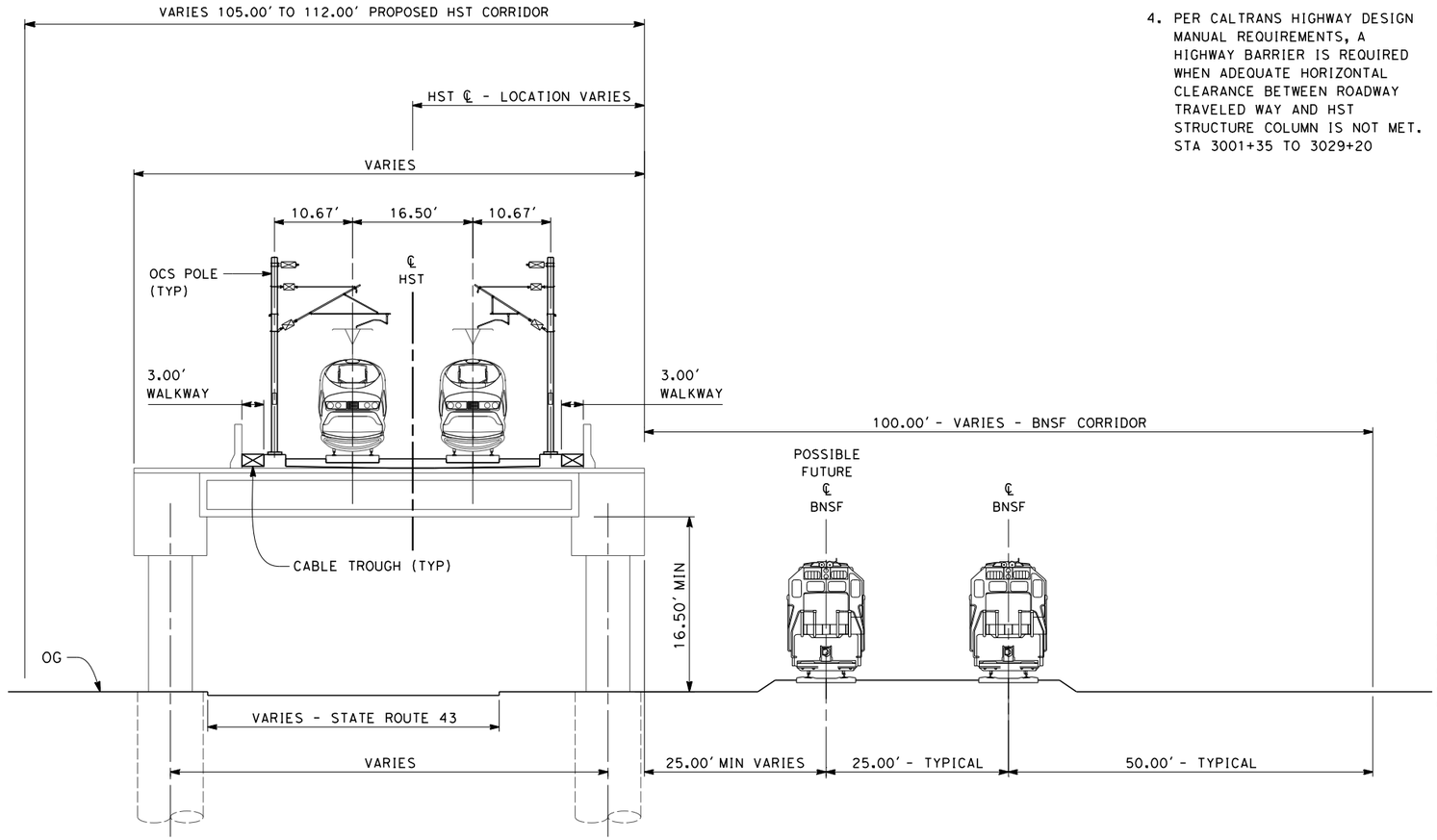


## SECTION 5

TWIN TRACK - ELEVATED SLAB OVER HIGHWAY
STA 3005+00 THROUGH STA 3009+00

10 0 10 20
1"=10'

04/02/2014 - RFP No.: HSR 13-57

| REV | DATE | BY | CHK | APP | DESCRIPTION |
|---|---|---|---|---|---|

DESIGNED BY S. LITSAS
DRAWN BY P. TONKIN
CHECKED BY K. SEYMOUR
IN CHARGE R. COFFIN
DATE 12/31/13

RECORD SET 15% DESIGN SUBMISSION - NOT FOR CONSTRUCTION

URS | HMM | ARUP
CALIFORNIA HIGH-SPEED TRAIN

CALIFORNIA HIGH-SPEED RAIL AUTHORITY

# CALIFORNIA HIGH-SPEED TRAIN PROJECT FRESNO TO BAKERSFIELD

CORCORAN BYPASS SUBSECTION
ALIGNMENT C2
TYPICAL SECTIONS

CONTRACT NO. HSR 06-0003
DRAWING NO. CB3256
SCALE AS SHOWN
SHEET NO. 12 OF 16

paul.tonkin 12/12/2013 7:47:40 PM c:\pwworking\hmm\external\paul.tonkin01-arup.com\d0124906\FB-CB-3256-C2.dgn

NOTES:

1. TRACKFORM SHOWN IS INDICATIVE
2. FOR STRUCTURE DIMENSIONS SEE STRUCTURAL CROSS SECTIONS
3. SUPERELEVATION IS NOT SHOWN. THE AMOUNT OF APPLIED SUPERELEVATION IS SHOWN IN THE CURVE DATA TABLES.
4. PER CALTRANS HIGHWAY DESIGN MANUAL REQUIREMENTS, A HIGHWAY BARRIER IS REQUIRED WHEN ADEQUATE HORIZONTAL CLEARANCE BETWEEN ROADWAY TRAVELED WAY AND HST STRUCTURE COLUMN IS NOT MET. STA 3001+35 TO 3029+20

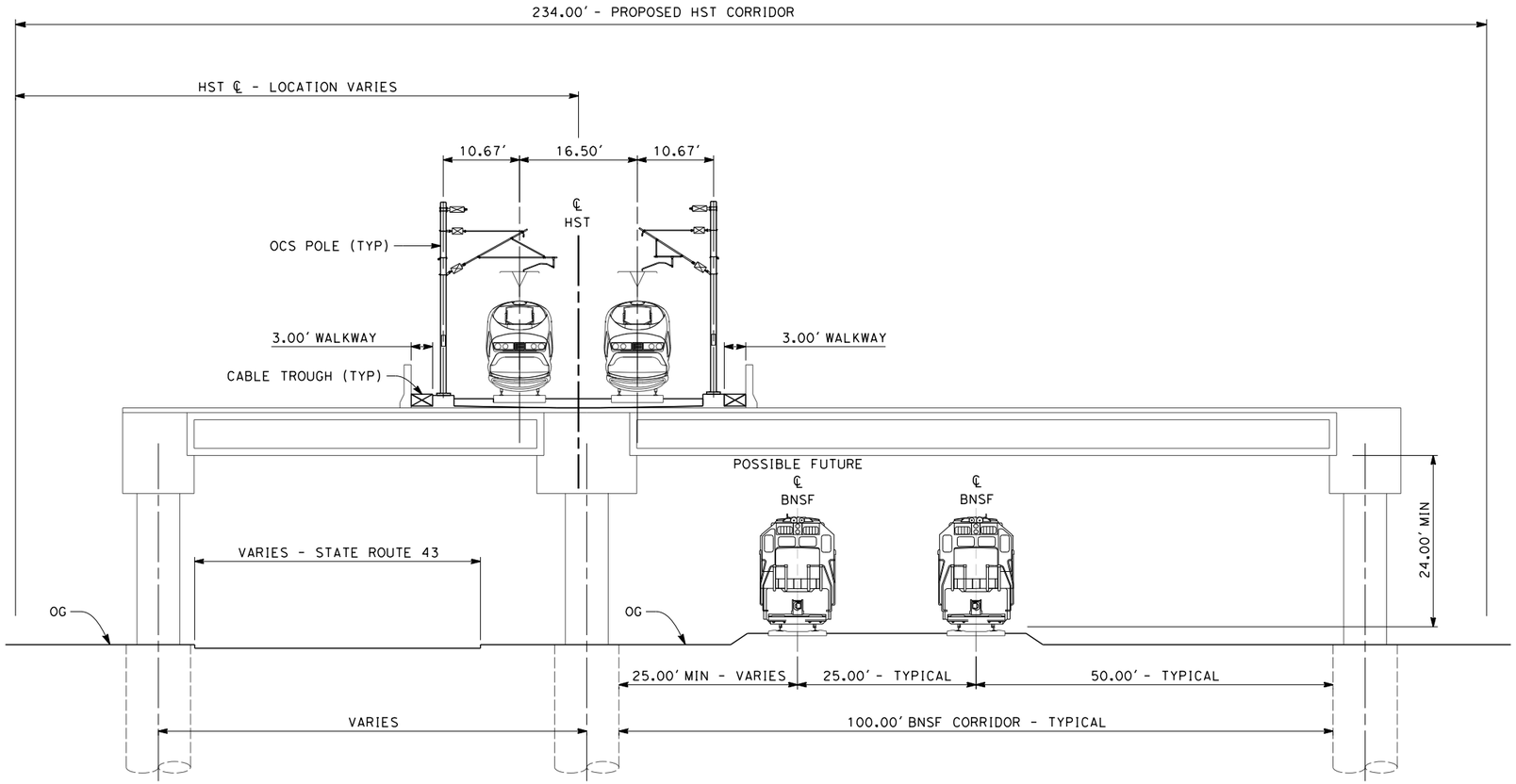


## SECTION 6

TWIN TRACK - ELEVATED SLAB OVER HIGHWAY AND BNSF
STA 3009+00 THROUGH STA 3015+20

10 0 10 20
1"=10'

04/02/2014 - RFP No.: HSR 13-57

12/12/2013 8:01:43 PM c:\pwworking\hmm\external\emma.raynor-arup.com\d0124906\VFB-CB-3257-C2.dgn
emma.raynor

| REV | DATE | BY | CHK | APP | DESCRIPTION |
|---|---|---|---|---|---|

DESIGNED BY S. LITSAS
DRAWN BY P. TONKIN
CHECKED BY K. SEYMOUR
IN CHARGE R. COFFIN
DATE 12/31/13

**RECORD SET 15% DESIGN SUBMISSION - NOT FOR CONSTRUCTION**

URS | HMM | ARUP
CALIFORNIA HIGH-SPEED TRAIN

CALIFORNIA HIGH-SPEED RAIL AUTHORITY

**CALIFORNIA HIGH-SPEED TRAIN PROJECT**
**FRESNO TO BAKERSFIELD**
CORCORAN BYPASS SUBSECTION
ALIGNMENT C2
TYPICAL SECTIONS

CONTRACT NO. HSR 06-0003
DRAWING NO. CB3257
SCALE AS SHOWN
SHEET NO. 13 OF 16

NOTES:

1. TRACKFORM SHOWN IS INDICATIVE
2. FOR STRUCTURE DIMENSIONS SEE STRUCTURAL CROSS SECTIONS
3. SUPERELEVATION IS NOT SHOWN. THE AMOUNT OF APPLIED SUPERELEVATION IS SHOWN IN THE CURVE DATA TABLES.
4. PER CALTRANS HIGHWAY DESIGN MANUAL REQUIREMENTS, A HIGHWAY BARRIER IS REQUIRED WHEN ADEQUATE HORIZONTAL CLEARANCE BETWEEN ROADWAY TRAVELED WAY AND HST STRUCTURE COLUMN IS NOT MET. STA 3001+35 TO 3029+20

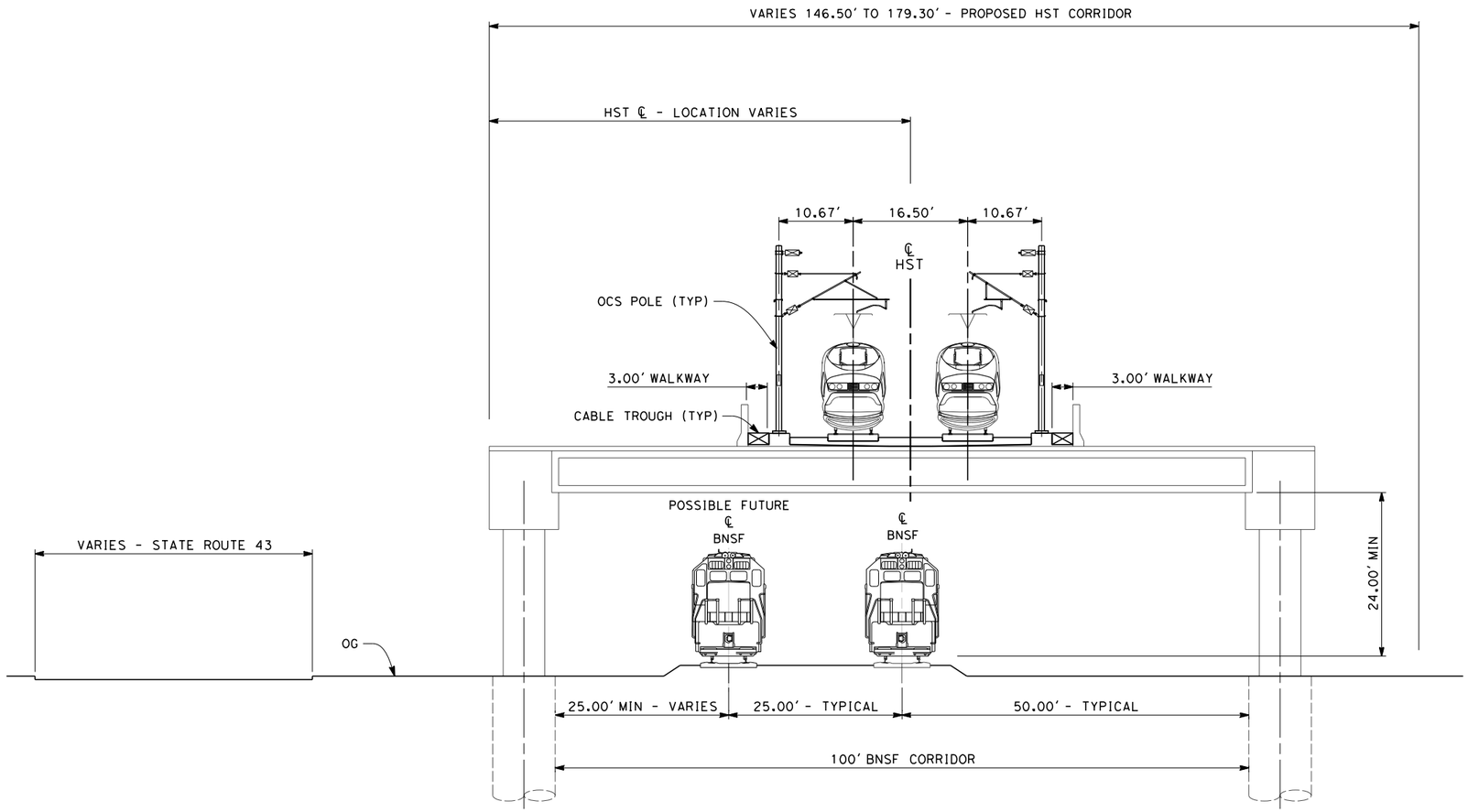


## SECTION 7

TWIN TRACK - ELEVATED SLAB OVER BNSF
STA 3015+20 THROUGH STA 3029+26

10 0 10 20
1"=10'

04/02/2014 - RFP No.: HSR 13-57

| REV | DATE | BY | CHK | APP | DESCRIPTION |
|---|---|---|---|---|---|

DESIGNED BY S. LITSAS
DRAWN BY P. TONKIN
CHECKED BY K. SEYMOUR
IN CHARGE R. COFFIN
DATE 12/31/13

RECORD SET 15% DESIGN SUBMISSION - NOT FOR CONSTRUCTION

URS | HMM | ARUP
CALIFORNIA HIGH-SPEED TRAIN

CALIFORNIA HIGH-SPEED RAIL AUTHORITY

**CALIFORNIA HIGH-SPEED TRAIN PROJECT**
**FRESNO TO BAKERSFIELD**
CORCORAN BYPASS SUBSECTION
ALIGNMENT C2
TYPICAL SECTIONS

CONTRACT NO. HSR 06-0003
DRAWING NO. CB3258
SCALE AS SHOWN
SHEET NO. 14 OF 16

paul.tonkin 12/12/2013 7:49:21 PM c:\pwworking\hmm\external\paul.tonkin01-arup.com\d0124906\VFB-CB-3258-C2.dgn

NOTES:

1. TRACKFORM SHOWN IS INDICATIVE
2. FOR STRUCTURE DIMENSIONS SEE STRUCTURAL CROSS SECTIONS
3. SUPERELEVATION IS NOT SHOWN. THE AMOUNT OF APPLIED SUPERELEVATION IS SHOWN IN THE CURVE DATA TABLES.

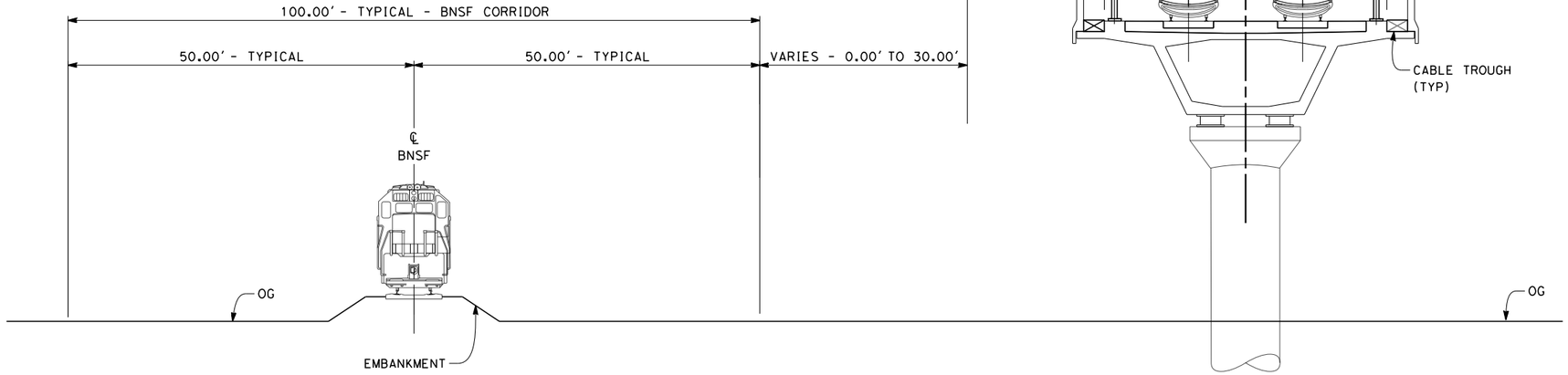


## SECTION 8

TWIN TRACK - AERIAL VIADUCT ADJACENT TO BNSF
STA 3029+26 THROUGH STA 3046+02

10 0 10 20
1"=10'

04/02/2014 - RFP No.: HSR 13-57

12/12/2013 7:49:58 PM c:\pwworking\hmm\external\paul.tonkin01-arup.com\d0124906\FB-CB-3259-C2.dgn
paul.tonkin

| REV | DATE | BY | CHK | APP | DESCRIPTION |
|---|---|---|---|---|---|

DESIGNED BY S. LITSAS
DRAWN BY P. TONKIN
CHECKED BY K. SEYMOUR
IN CHARGE R. COFFIN
DATE 12/31/13

RECORD SET 15% DESIGN SUBMISSION - NOT FOR CONSTRUCTION

URS | HMM | ARUP
California High-Speed Train

CALIFORNIA HIGH-SPEED RAIL AUTHORITY

**CALIFORNIA HIGH-SPEED TRAIN PROJECT**
**FRESNO TO BAKERSFIELD**
CORCORAN BYPASS SUBSECTION
ALIGNMENT C2
TYPICAL SECTIONS

CONTRACT NO. HSR 06-0003
DRAWING NO. CB3259
SCALE AS SHOWN
SHEET NO. 15 OF 16

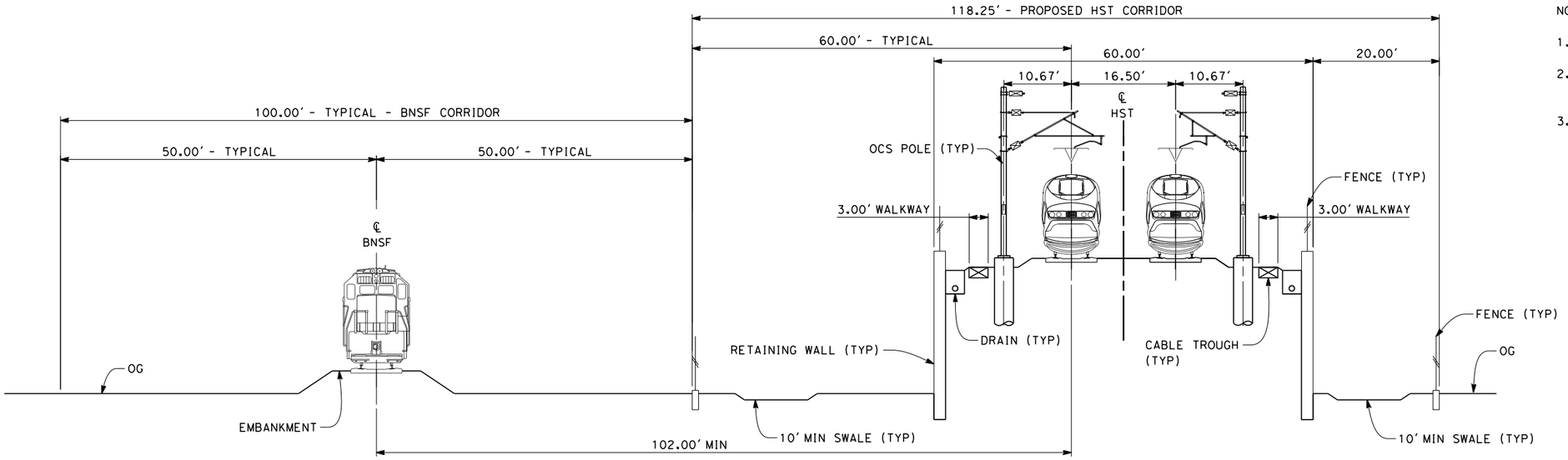


NOTES:

1. TRACKFORM SHOWN IS INDICATIVE
2. FOR STRUCTURE DIMENSIONS SEE STRUCTURAL CROSS SECTIONS
3. SUPERELEVATION IS NOT SHOWN. THE AMOUNT OF APPLIED SUPERELEVATION IS SHOWN IN THE CURVE DATA TABLES.

## SECTION 9

TWIN TRACK - RETAINED EMBANKMENT ADJACENT TO BNSF
STA 3046+02 THROUGH STA 3064+70

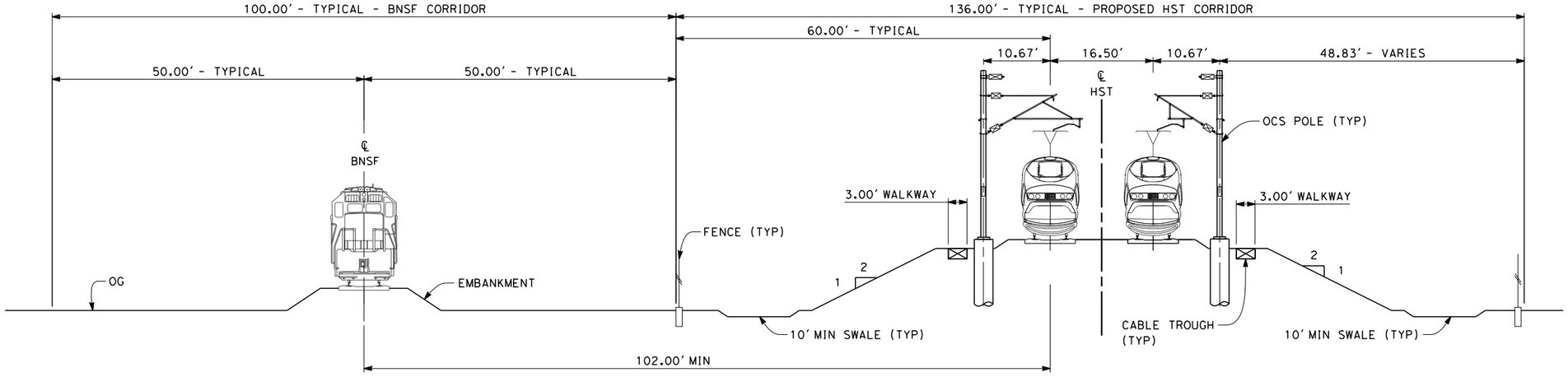


## SECTION 10

TWIN TRACK - ADJACENT TO BNSF
STA 3064+70 THROUGH STA 3096+00

10 0 10 20
1"=10'

| REV | DATE | BY | CHK | APP | DESCRIPTION |
|---|---|---|---|---|---|

DESIGNED BY S. LITSAS
DRAWN BY P. TONKIN
CHECKED BY K. SEYMOUR
IN CHARGE R. COFFIN
DATE 12/31/13

**RECORD SET 15% DESIGN SUBMISSION - NOT FOR CONSTRUCTION**

URS | HMM | ARUP
California High-Speed Train

CALIFORNIA HIGH-SPEED RAIL AUTHORITY

**CALIFORNIA HIGH-SPEED TRAIN PROJECT**
**FRESNO TO BAKERSFIELD**
CORCORAN BYPASS SUBSECTION
ALIGNMENT C2
TYPICAL SECTIONS

CONTRACT NO. HSR 06-0003
DRAWING NO. CB3260
SCALE AS SHOWN
SHEET NO. 16 OF 16

04/02/2014 - RFP No.: HSR 13-57

paul.tonkin 12/12/2013 7:51:23 PM c:\pwworking\hmm\external\paul.tonkin01-arup.com\d0124906\FB-CB-3260-C2.dgn

04/02/2014 - RFP No.: HSR 13-57

| REV | DATE | BY | CHK | APP | DESCRIPTION |
|---|---|---|---|---|---|

DESIGNED BY S. LITSAS
DRAWN BY J. BORGHESI
CHECKED BY K. SEYMOUR
IN CHARGE R. COFFIN
DATE 12/31/13

**RECORD SET 15% DESIGN SUBMISSION - NOT FOR CONSTRUCTION**

URS | HMM | ARUP
CALIFORNIA HIGH-SPEED TRAIN

CALIFORNIA HIGH-SPEED RAIL AUTHORITY

# CALIFORNIA HIGH-SPEED TRAIN PROJECT
# FRESNO TO BAKERSFIELD

PIXLEY SUBSECTION
ALIGNMENT P
STA. 3096+00 TO 3459+25
KEY MAP

CONTRACT NO. HSR 06-0003
DRAWING NO. CB1300
SCALE AS SHOWN
SHEET NO. 1 OF 9

eron.sudhausen 12/10/2013 9:23:12 AM c:\pwworking\hmm\external\eron.sudhausen-arup.com\d0123770\FB-CB-1300-P.dgn

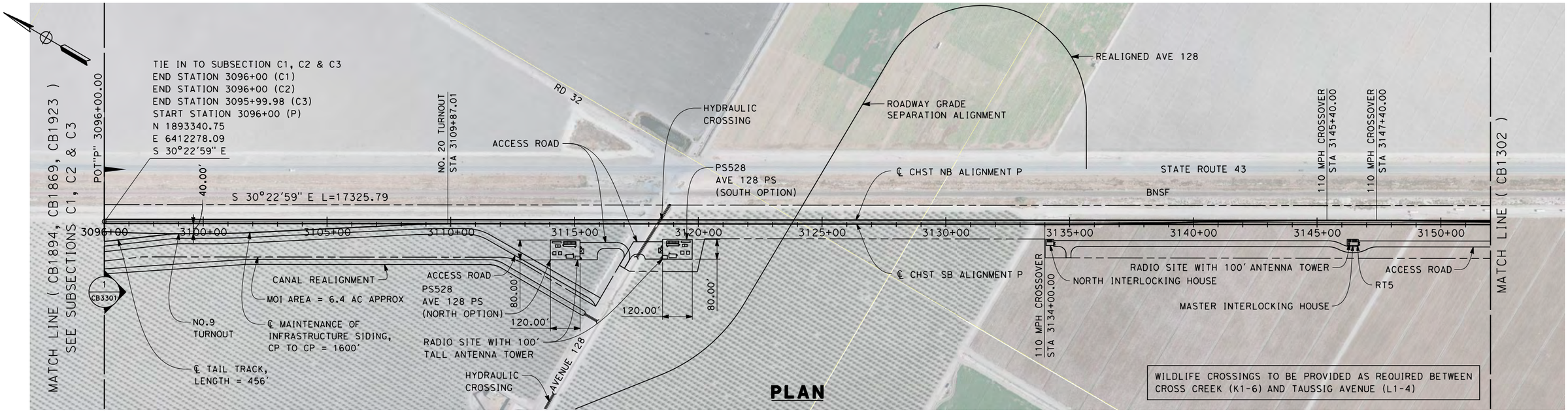


**PLAN**

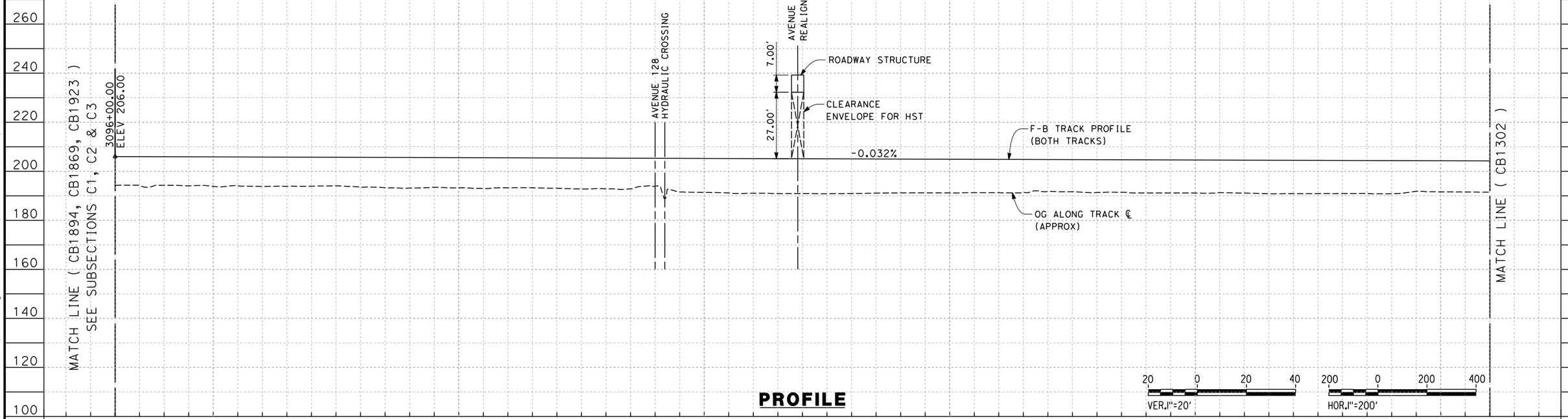


**PROFILE**

| REV | DATE | BY | CHK | APP | DESCRIPTION |
|---|---|---|---|---|---|

DESIGNED BY S. LITSAS
DRAWN BY J. BORGHESI
CHECKED BY K. SEYMOUR
IN CHARGE R. COFFIN
DATE 12/31/13

**RECORD SET 15% DESIGN SUBMISSION - NOT FOR CONSTRUCTION**

URS | HMM | ARUP
CALIFORNIA HIGH-SPEED TRAIN

CALIFORNIA
HIGH-SPEED RAIL AUTHORITY

# CALIFORNIA HIGH-SPEED TRAIN PROJECT
# FRESNO TO BAKERSFIELD

PIXLEY SUBSECTION
ALIGNMENT P
STA. 3096+00 TO 3152+00
PLAN AND PROFILE

CONTRACT NO. HSR 06-0003
DRAWING NO. CB1301
SCALE AS SHOWN
SHEET NO. 2 OF 9

04/02/2014 - RFP No.: HSR 13-57

12/12/2013 3:54:09 PM c:\pwworking\hmm\external\paul.tonkin01-arup.com\d0123770\FB-CB-1301-P.dgn paul.tonkin

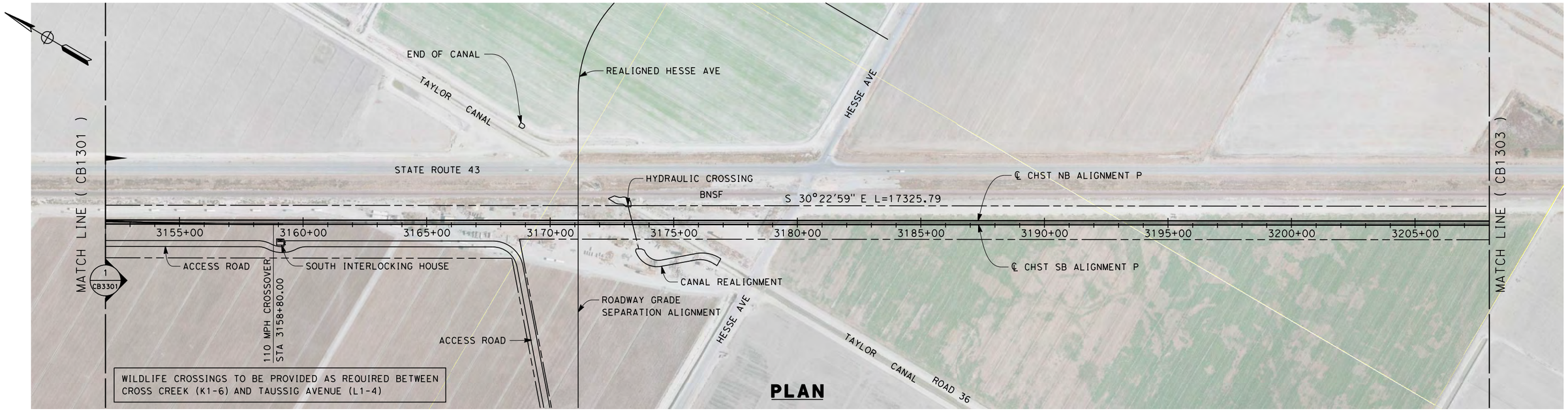


**PLAN**

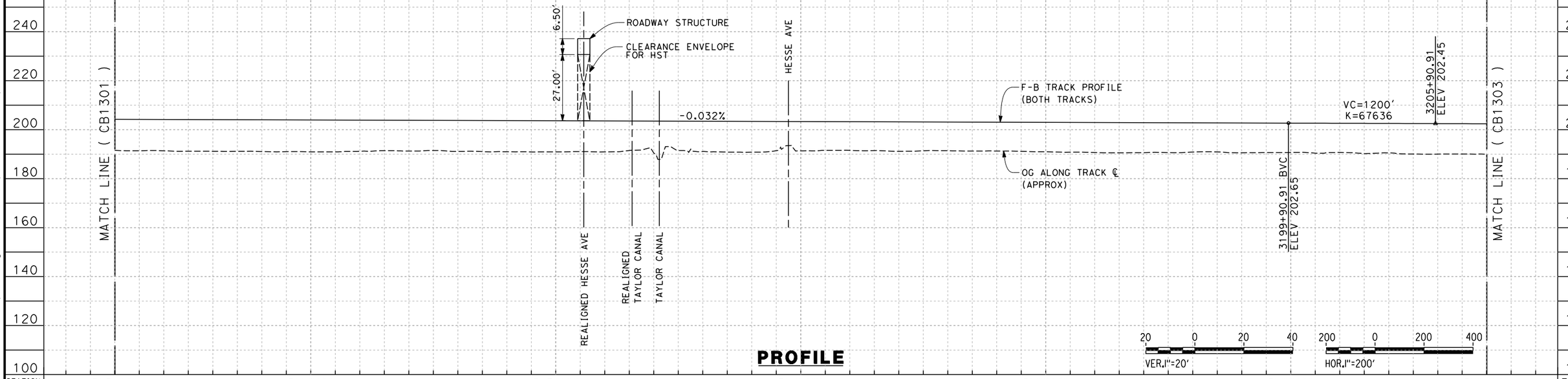


**PROFILE**

| STATION | 3152+00 | 3160+00 | 3170+00 | 3180+00 | 3190+00 | 3200+00 | 3208+00 | TOTAL |
|---|---|---|---|---|---|---|---|---|
| CY Exc | | | | | | | | |
| CY Emb | | | | | | | | |

| REV | DATE | BY | CHK | APP | DESCRIPTION |
|---|---|---|---|---|---|

DESIGNED BY S. LITSAS
DRAWN BY J. BORGHESI
CHECKED BY K. SEYMOUR
IN CHARGE R. COFFIN
DATE 12/31/13

**RECORD SET 15% DESIGN SUBMISSION - NOT FOR CONSTRUCTION**

URS | HMM | ARUP
CALIFORNIA HIGH-SPEED TRAIN

CALIFORNIA HIGH-SPEED RAIL AUTHORITY

**CALIFORNIA HIGH-SPEED TRAIN PROJECT**
**FRESNO TO BAKERSFIELD**
PIXLEY SUBSECTION
ALIGNMENT P
STA. 3152+00 TO 3208+00
PLAN AND PROFILE

CONTRACT NO. HSR 06-0003
DRAWING NO. CB1302
SCALE AS SHOWN
SHEET NO. 3 OF 9

04/02/2014 - RFP No.: HSR 13-57

12/12/2013 3:55:11 PM c:\pwworking\hmm\external\paul.tonkin01-arup.com\d0123770\FB-CB-1302-P.dgn paul.tonkin

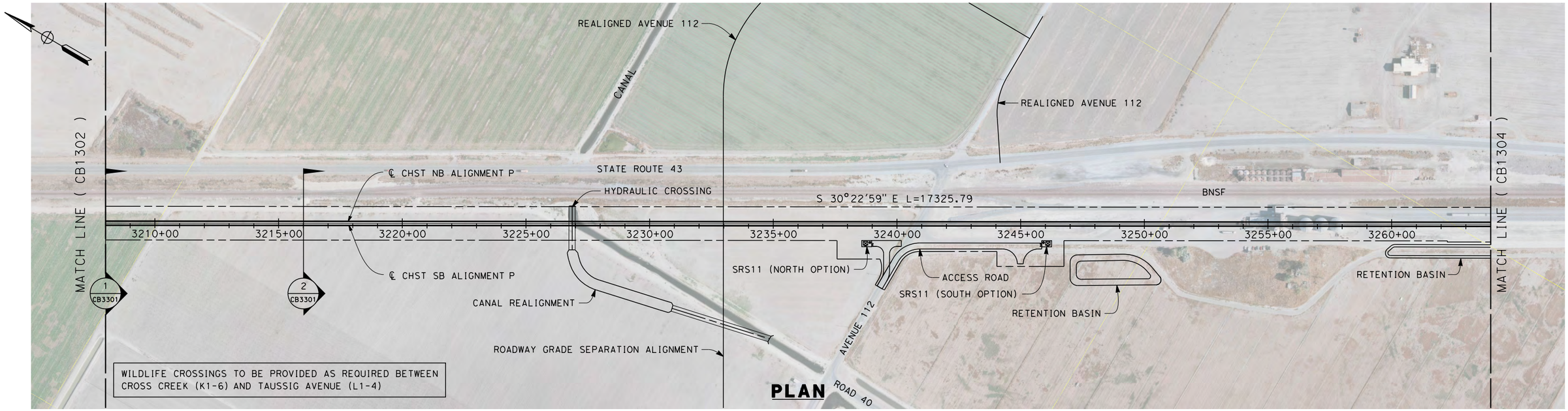


**PLAN**

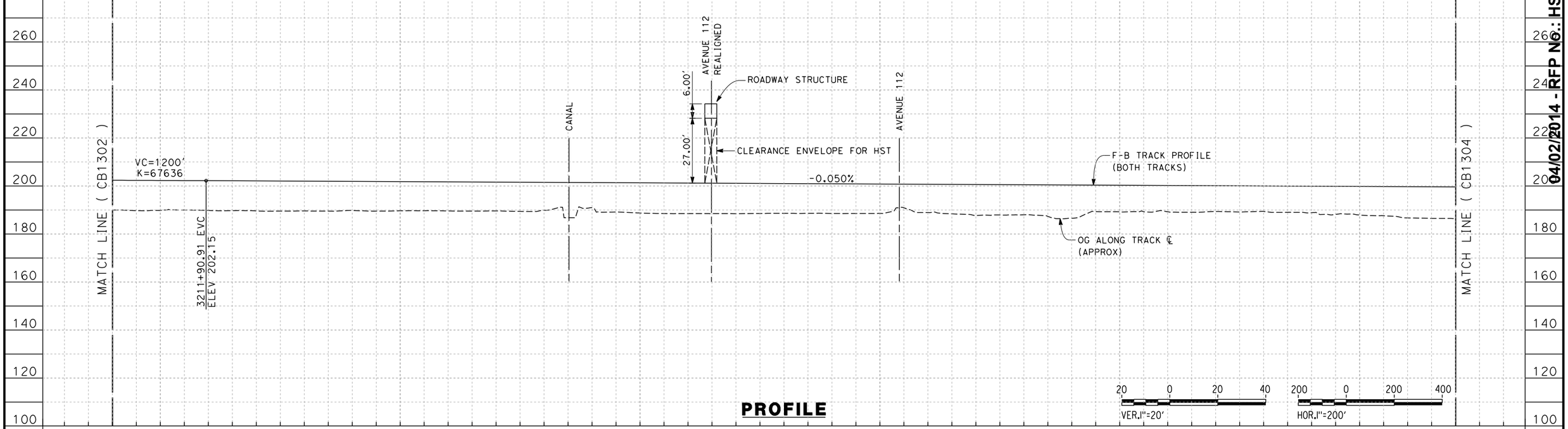


**PROFILE**

| REV | DATE | BY | CHK | APP | DESCRIPTION |
|---|---|---|---|---|---|
| | | | | | |

DESIGNED BY S. LITSAS
DRAWN BY J. BORGHESI
CHECKED BY K. SEYMOUR
IN CHARGE R. COFFIN
DATE 12/31/13

**RECORD SET 15% DESIGN SUBMISSION - NOT FOR CONSTRUCTION**

URS | HMM | ARUP
CALIFORNIA HIGH-SPEED TRAIN

CALIFORNIA HIGH-SPEED RAIL AUTHORITY

# CALIFORNIA HIGH-SPEED TRAIN PROJECT
## FRESNO TO BAKERSFIELD
PIXLEY SUBSECTION
ALIGNMENT P
STA. 3208+00 TO 3264+00
PLAN AND PROFILE

CONTRACT NO. HSR 06-0003
DRAWING NO. CB1303
SCALE AS SHOWN
SHEET NO. 4 OF 9

$FILE$ $TIME$ $DATE$ $USER$

04/02/2014 - RFP NO.: HSR 13-57

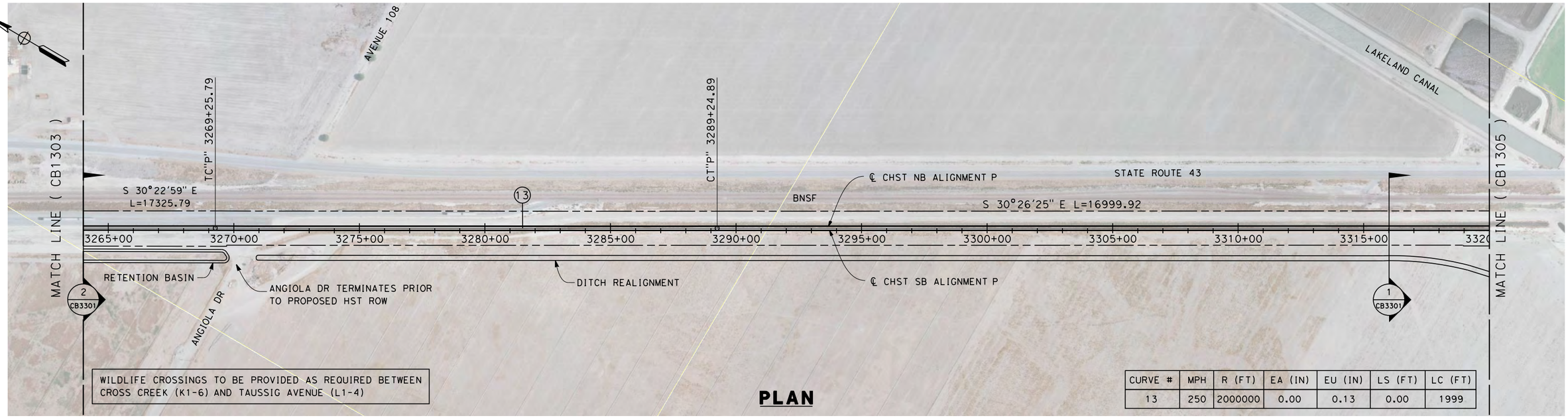


**PLAN**

| CURVE # | MPH | R (FT) | EA (IN) | EU (IN) | LS (FT) | LC (FT) |
|---|---|---|---|---|---|---|
| 13 | 250 | 2000000 | 0.00 | 0.13 | 0.00 | 1999 |

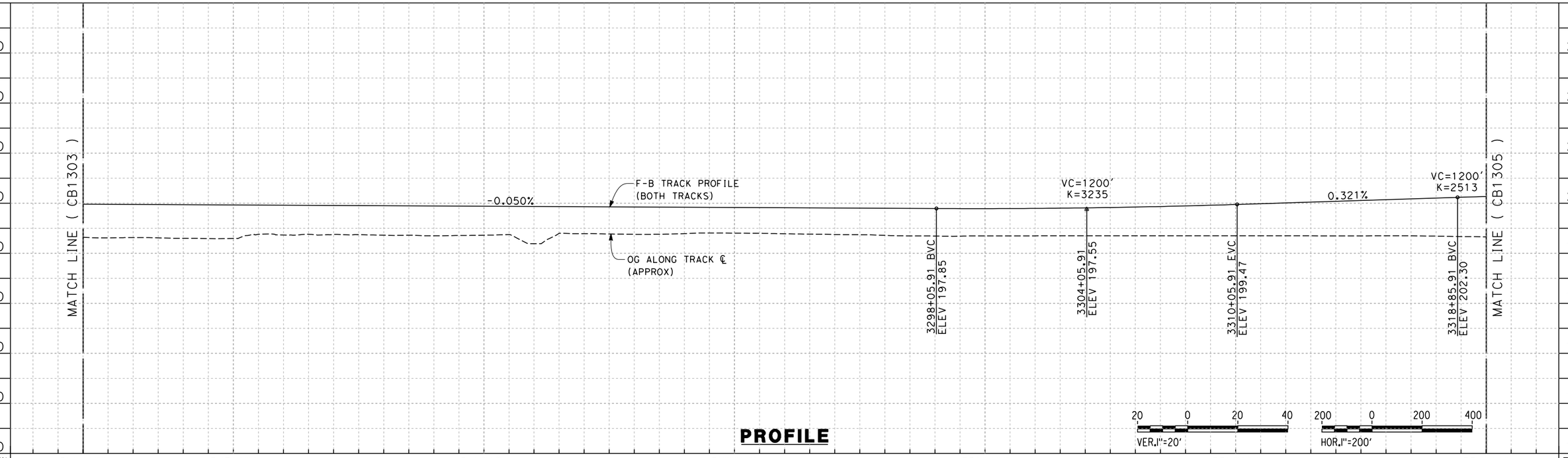


**PROFILE**

| STATION | 3264+00 | 3270+00 | 3280+00 | 3290+00 | 3300+00 | 3310+00 | 3320+00 | TOTAL |
|---|---|---|---|---|---|---|---|---|
| CY Exc | | | | | | | | |
| CY Emb | | | | | | | | |

| REV | DATE | BY | CHK | APP | DESCRIPTION |
|---|---|---|---|---|---|

DESIGNED BY S. LITSAS
DRAWN BY J. BORGHESI
CHECKED BY K. SEYMOUR
IN CHARGE R. COFFIN
DATE 12/31/13

**RECORD SET 15% DESIGN SUBMISSION - NOT FOR CONSTRUCTION**

URS | HMM | ARUP
CALIFORNIA HIGH-SPEED TRAIN

CALIFORNIA
HIGH-SPEED RAIL AUTHORITY

**CALIFORNIA HIGH-SPEED TRAIN PROJECT**
**FRESNO TO BAKERSFIELD**
PIXLEY SUBSECTION
ALIGNMENT P
STA. 3264+00 TO 3320+00
PLAN AND PROFILE

CONTRACT NO. HSR 06-0003
DRAWING NO. CB1304
SCALE AS SHOWN
SHEET NO. 5 OF 9

04/02/2014 - RFP No.: HSR 13-57

12/12/2013 3:57:55 PM c:\pwworking\hmm\external\paul.tonkin01-arup.com\d0123770\FB-CB-1304-P.dgn paul.tonkin

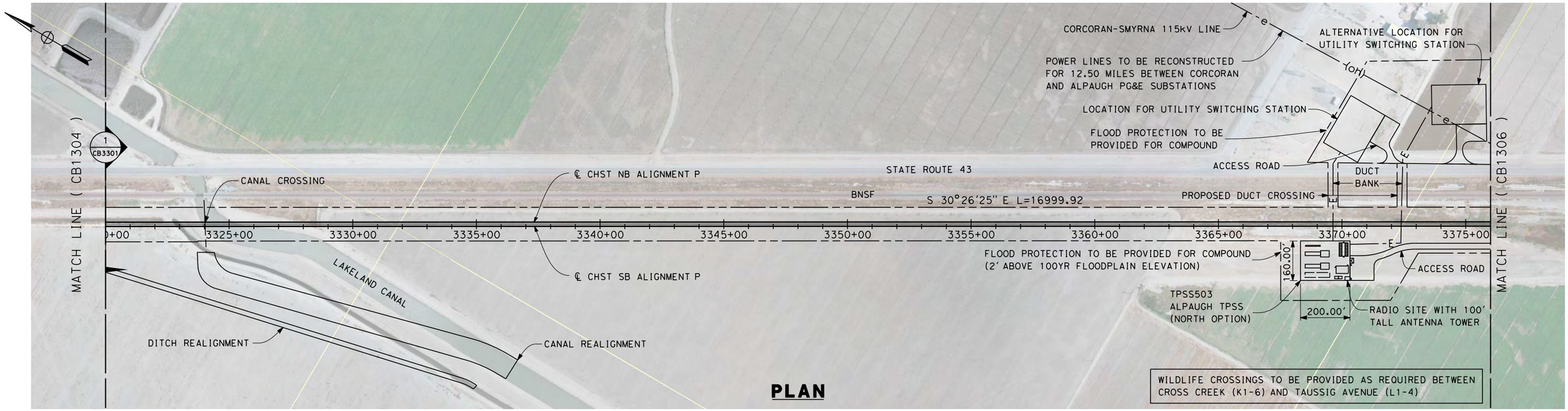


**PLAN**

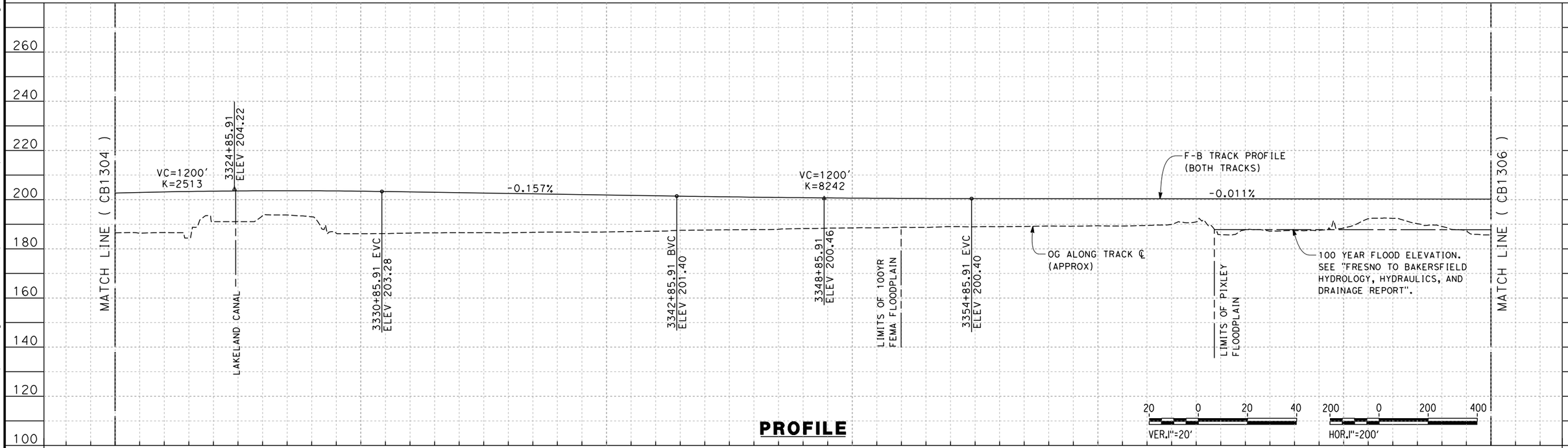


**PROFILE**

| REV | DATE | BY | CHK | APP | DESCRIPTION |
|---|---|---|---|---|---|

DESIGNED BY S. LITSAS
DRAWN BY J. BORGHESI
CHECKED BY K. SEYMOUR
IN CHARGE R. COFFIN
DATE 12/31/13

**RECORD SET 15% DESIGN SUBMISSION - NOT FOR CONSTRUCTION**

URS | HMM | ARUP
CALIFORNIA HIGH-SPEED TRAIN

CALIFORNIA HIGH-SPEED RAIL AUTHORITY

# CALIFORNIA HIGH-SPEED TRAIN PROJECT
# FRESNO TO BAKERSFIELD
PIXLEY SUBSECTION
ALIGNMENT P
STA. 3320+00 TO 3376+00
PLAN AND PROFILE

CONTRACT NO. HSR 06-0003
DRAWING NO. CB1305
SCALE AS SHOWN
SHEET NO. 6 OF 9

04/02/2014 - RFP No.: HSR 13-57

12/12/2013 3:59:09 PM c:\pwworking\hmm\external\paul.tonkin01-arup.com\d0123770\FB-CB-1305-P.dgn paul.tonkin

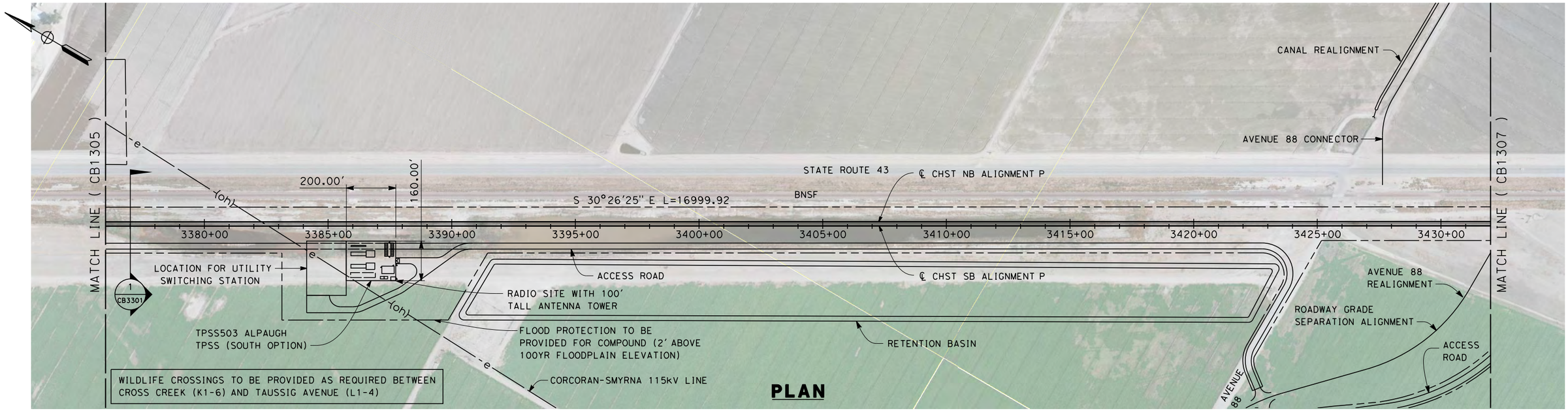


**PLAN**

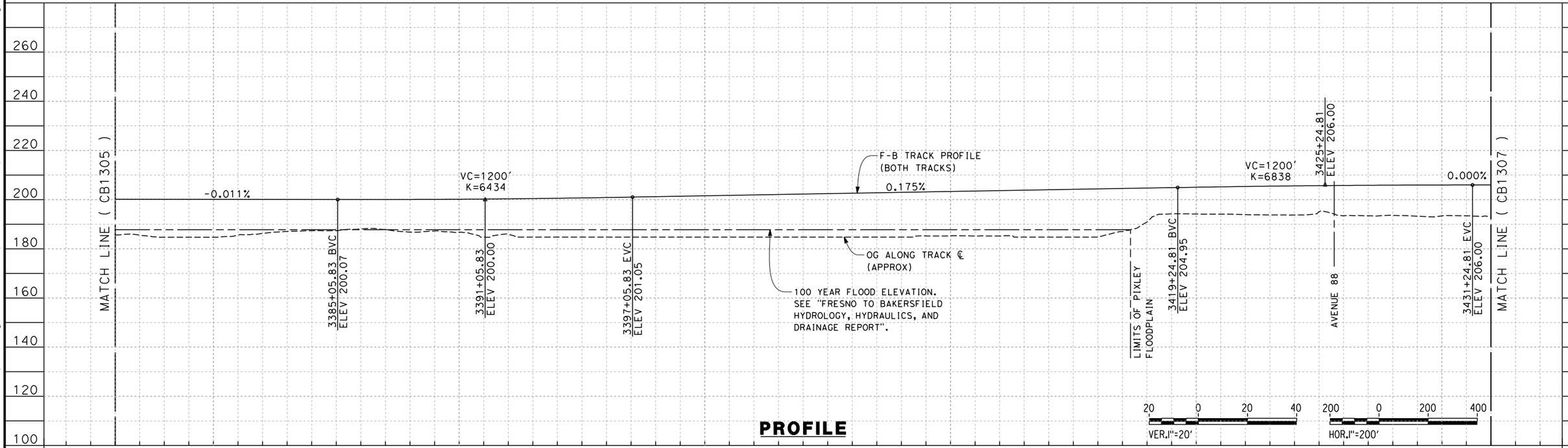


**PROFILE**

| STATION | 3376+00 | 3380+00 | 3390+00 | 3400+00 | 3410+00 | 3420+00 | 3430+00 | 3432+00 | TOTAL |
|---|---|---|---|---|---|---|---|---|---|
| CY Exc | | | | | | | | | |
| CY Emb | | | | | | | | | |

| REV | DATE | BY | CHK | APP | DESCRIPTION |
|---|---|---|---|---|---|

DESIGNED BY S. LITSAS
DRAWN BY J. BORGHESI
CHECKED BY K. SEYMOUR
IN CHARGE R. COFFIN
DATE 12/31/13

**RECORD SET 15% DESIGN SUBMISSION - NOT FOR CONSTRUCTION**

URS | HMM | ARUP
California High-Speed Train

CALIFORNIA HIGH-SPEED RAIL AUTHORITY

**CALIFORNIA HIGH-SPEED TRAIN PROJECT**
**FRESNO TO BAKERSFIELD**
PIXLEY SUBSECTION
ALIGNMENT P
STA. 3376+00 TO 3432+00
PLAN AND PROFILE

CONTRACT NO. HSR 06-0003
DRAWING NO. CB1306
SCALE AS SHOWN
SHEET NO. 7 OF 9

04/02/2014 - RFP No.: HSR 13-57

12/12/2013 4:00:19 PM c:\pwworking\hmm\external\paul.tonkin01-arup.com\d0123770\FB-CB-1306-P.dgn paul.tonkin

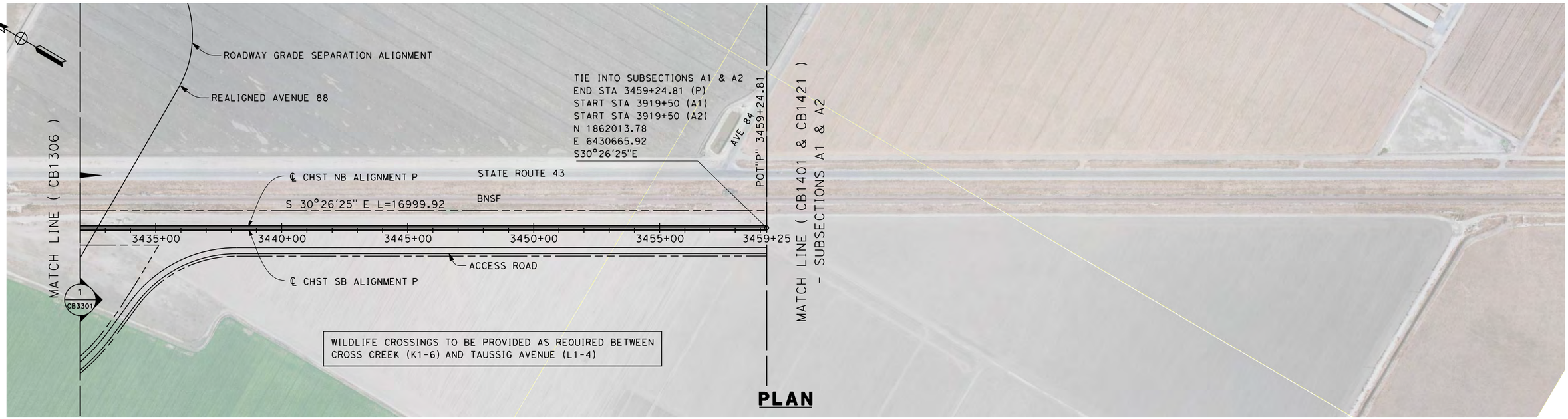


**PLAN**

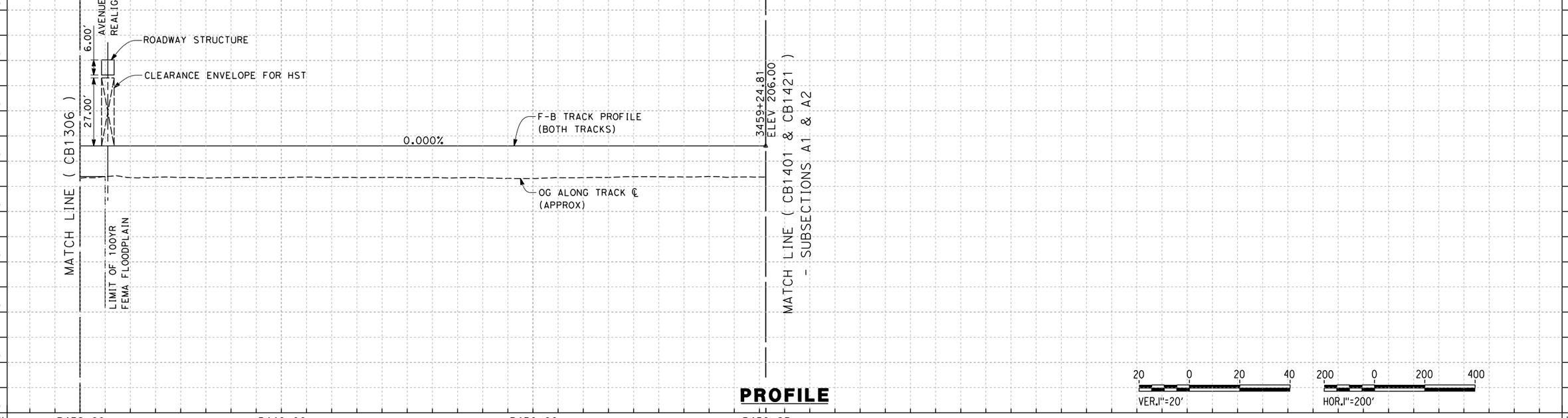


**PROFILE**

| STATION | 3432+00 | 3440+00 | 3450+00 | 3459+25 | TOTAL |
|---|---|---|---|---|---|
| CY Exc | | | | | |
| CY Emb | | | | | |

| REV | DATE | BY | CHK | APP | DESCRIPTION |
|---|---|---|---|---|---|
| | | | | | |

DESIGNED BY S. LITSAS
DRAWN BY J. BORGHESI
CHECKED BY K. SEYMOUR
IN CHARGE R. COFFIN
DATE 12/31/13

**RECORD SET 15% DESIGN SUBMISSION - NOT FOR CONSTRUCTION**

URS | HMM | ARUP
CALIFORNIA HIGH-SPEED TRAIN

CALIFORNIA HIGH-SPEED RAIL AUTHORITY

# CALIFORNIA HIGH-SPEED TRAIN PROJECT
# FRESNO TO BAKERSFIELD

PIXLEY SUBSECTION
ALIGNMENT P
STA. 3432+00 TO 3459+25
PLAN AND PROFILE

CONTRACT NO. HSR 06-0003
DRAWING NO. CB1307
SCALE AS SHOWN
SHEET NO. 8 OF 9

RFP NO.: HSR 13-57
04/02/2014 - RFP NO.

12/12/2013 4:01:36 PM c:\pwworking\hmm\external\paul.tonkin01-arup.com\d0123770\FB-CB-1307-P.dgn
paul.tonkin

NOTES:

1. TRACKFORM SHOWN IS INDICATIVE.
2. FOR STRUCTURE DIMENSIONS SEE STRUCTURAL CROSS SECTIONS.

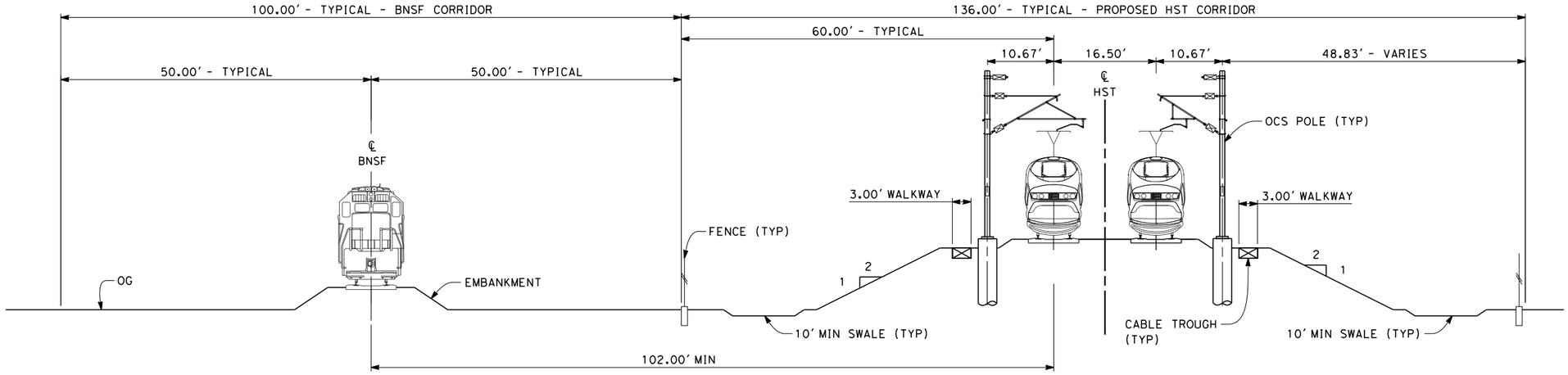


## SECTION 1

TWIN TRACK - ADJACENT TO SINGLE TRACK BNSF
STA 3096+00 THROUGH STA 3216+00
STA 3316+00 THROUGH STA 3459+25

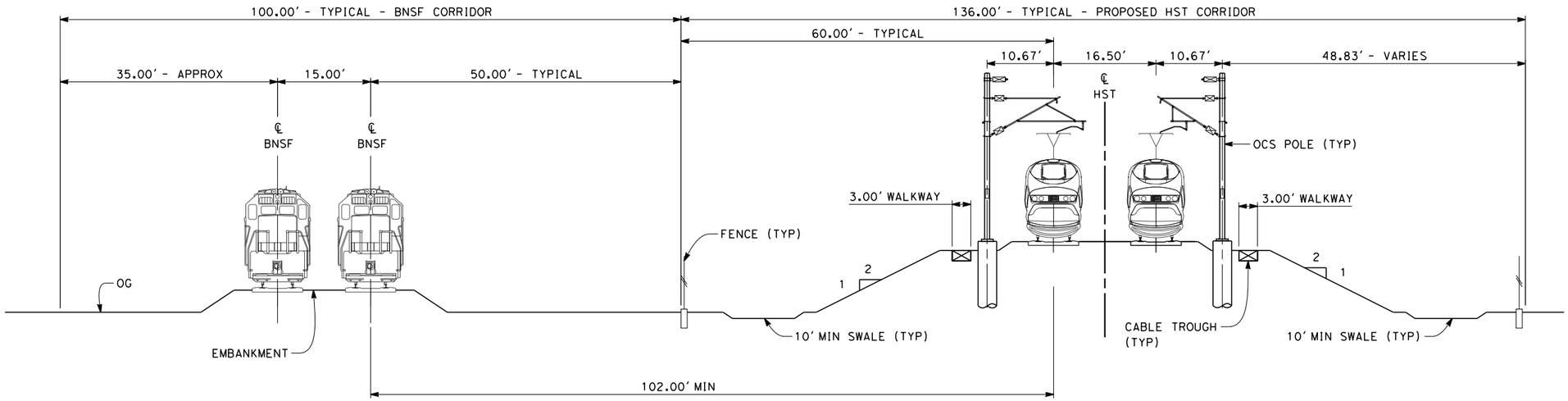


## SECTION 2

TWIN TRACK - ADJACENT TO TWIN TRACK BNSF
STA 3216+00 THROUGH STA 3316+00

10 0 10 20
1"=10'

| REV | DATE | BY | CHK | APP | DESCRIPTION |
|---|---|---|---|---|---|

DESIGNED BY S. LITSAS
DRAWN BY J. BORGHESI
CHECKED BY K. SEYMOUR
IN CHARGE R. COFFIN
DATE 12/31/13

**RECORD SET 15% DESIGN SUBMISSION - NOT FOR CONSTRUCTION**

URS | HMM | ARUP
CALIFORNIA HIGH-SPEED TRAIN

CALIFORNIA HIGH-SPEED RAIL AUTHORITY

**CALIFORNIA HIGH-SPEED TRAIN PROJECT**
**FRESNO TO BAKERSFIELD**
PIXLEY SUBSECTION
ALIGNMENT P
TYPICAL SECTION

CONTRACT NO. HSR 06-0003
DRAWING NO. CB3301
SCALE AS SHOWN
SHEET NO. 9 OF 9

**04/02/2014 - RFP No.: HSR 13-57**

paul.tonkin 12/12/2013 4:02:19 PM c:\pwworking\hmm\external\paul.tonkin01-arup.com\d0123770\VFB-CB-3301-P.dgn

LEGEND

EXISTING FREIGHT RAILROAD

PROPOSED CHST

3000 0 3000 6000

1"=3000'

| REV | DATE | BY | CHK | APP | DESCRIPTION |
|---|---|---|---|---|---|
| | | | | | |

DESIGNED BY S. LITSAS
DRAWN BY E. TANAKA
CHECKED BY G. WALKER
IN CHARGE R. COFFIN
DATE 02/04/14

**RECORD SET 15% DESIGN SUBMISSION - NOT FOR CONSTRUCTION**

URS | HMM | ARUP
CALIFORNIA HIGH-SPEED TRAIN

CALIFORNIA
HIGH-SPEED RAIL AUTHORITY

# CALIFORNIA HIGH-SPEED TRAIN PROJECT
## FRESNO TO BAKERSFIELD
ALLENSWORTH BYPASS SUBSECTION
ALIGNMENT A1
STA. 3919+50 TO 4925+51
KEY MAP

CONTRACT NO. HSR 06-0003
DRAWING NO. CB1400
SCALE AS SHOWN
SHEET NO. 1 OF 21

04/02/2014 - RFP No.: HSR 13-57

Paul.Tonkin 1/27/2014 5:23:36 PM c:\pwworking\hmm\external\paul.tonkin01-arup.com\d0178591\FB-CB-1400-A1.dgn

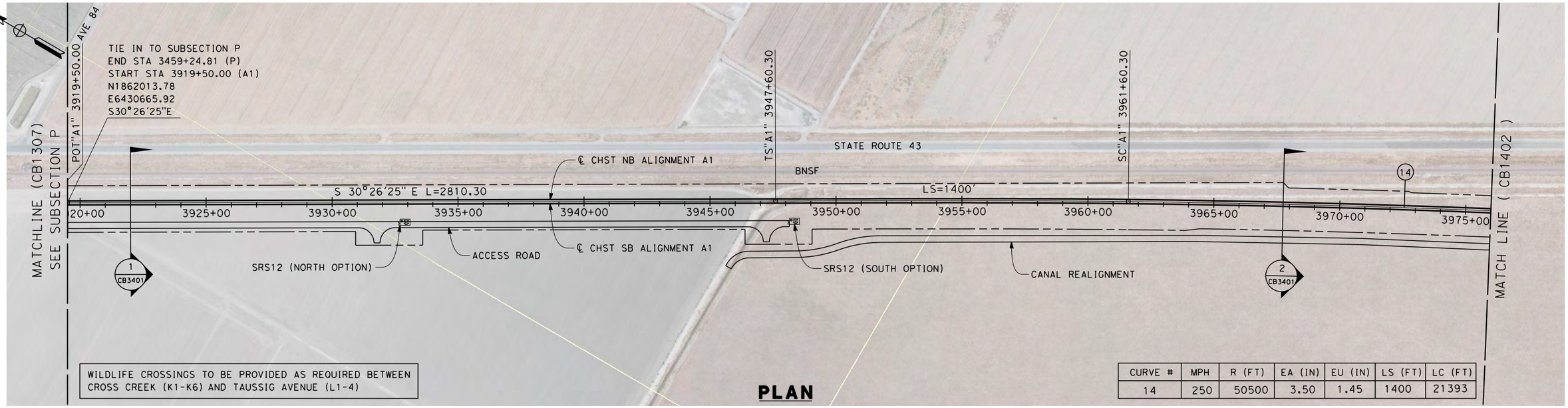


WILDLIFE CROSSINGS TO BE PROVIDED AS REQUIRED BETWEEN CROSS CREEK (K1-K6) AND TAUSSIG AVENUE (L1-4)

**PLAN**

| CURVE # | MPH | R (FT) | EA (IN) | EU (IN) | LS (FT) | LC (FT) |
|---|---|---|---|---|---|---|
| 14 | 250 | 50500 | 3.50 | 1.45 | 1400 | 21393 |

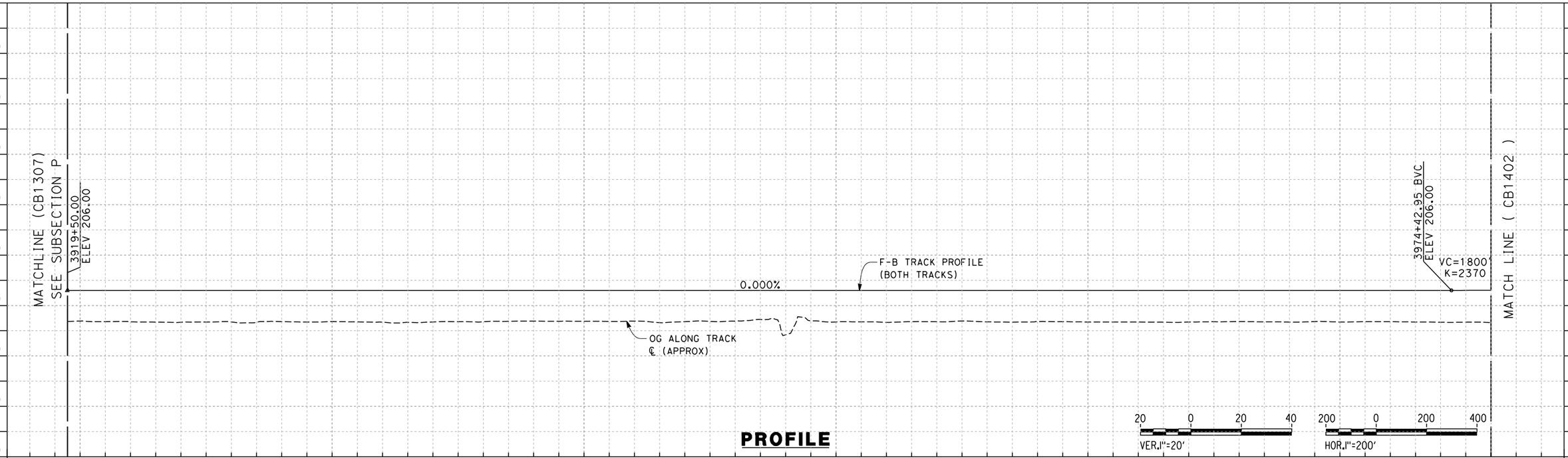


**PROFILE**

| REV | DATE | BY | CHK | APP | DESCRIPTION |
|---|---|---|---|---|---|

DESIGNED BY S. LITSAS
DRAWN BY E. TANAKA
CHECKED BY G. WALKER
IN CHARGE R. COFFIN
DATE 12/31/13

**RECORD SET 15% DESIGN SUBMISSION - NOT FOR CONSTRUCTION**

URS | HMM | ARUP
California High-Speed Train

CALIFORNIA HIGH-SPEED RAIL AUTHORITY

**CALIFORNIA HIGH-SPEED TRAIN PROJECT**
**FRESNO TO BAKERSFIELD**
ALLENSWORTH BYPASS SUBSECTION
ALIGNMENT A1
STA. 3919+50 TO 3976+00
PLAN AND PROFILE

CONTRACT NO. HSR 06-0003
DRAWING NO. CB1401
SCALE AS SHOWN
SHEET NO. 2 OF 21

04/02/2014 - RFP No.: HSR 13-57

stephen.litsas 12/12/2013 4:06:48 PM c:\pwworking\hmm\external\paul.tonkin01-arup.com\d0123214\FB-CB-1401-A1.dgn

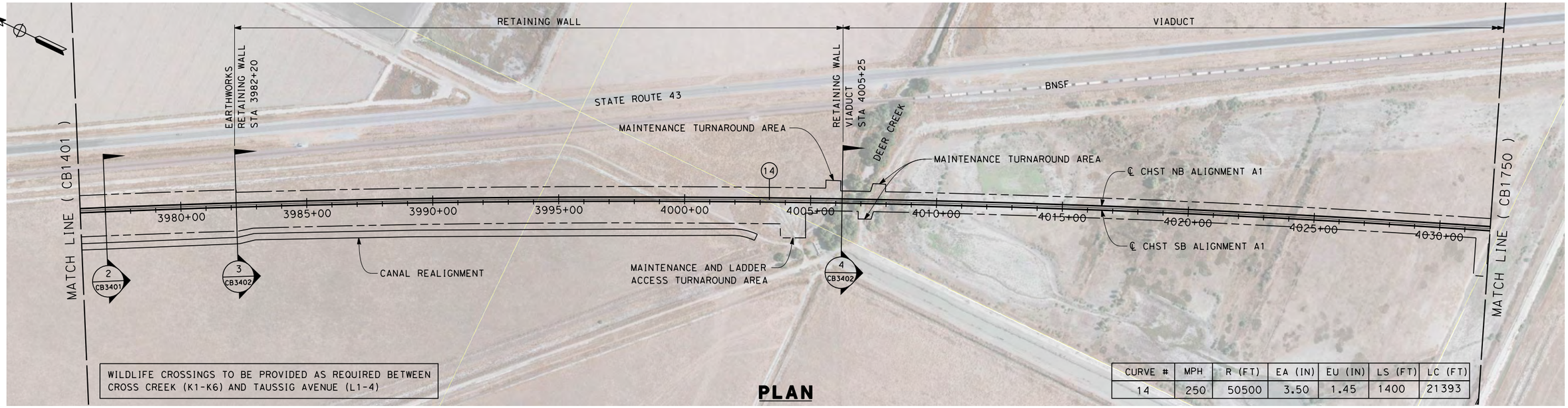


**PLAN**

| CURVE # | MPH | R (FT) | EA (IN) | EU (IN) | LS (FT) | LC (FT) |
|---|---|---|---|---|---|---|
| 14 | 250 | 50500 | 3.50 | 1.45 | 1400 | 21393 |

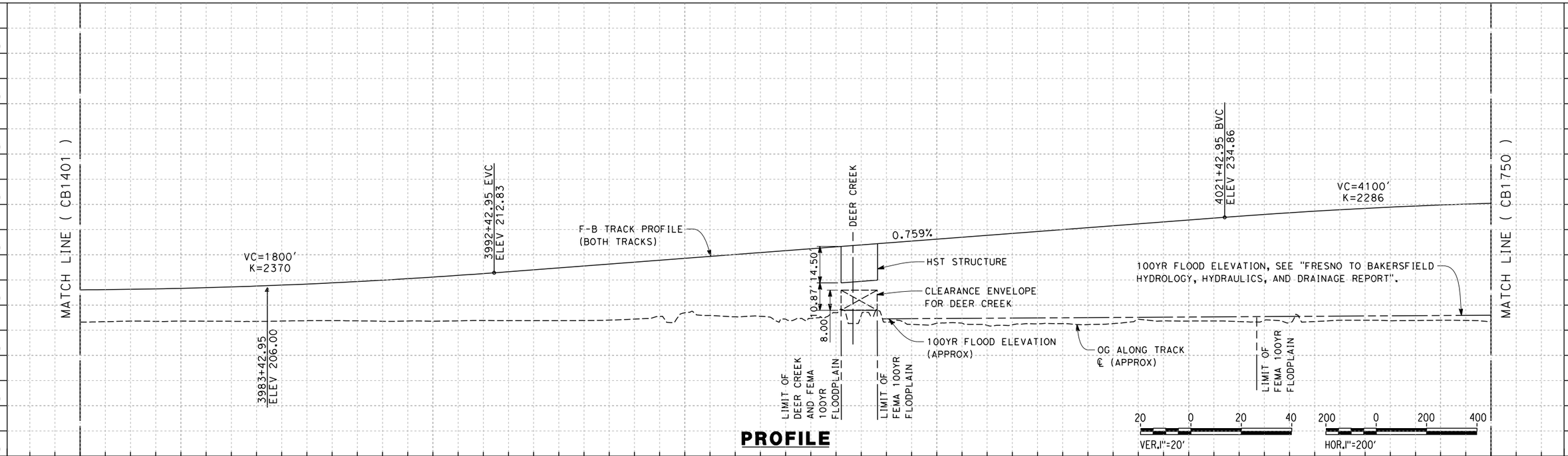


**PROFILE**

| STATION | 3976+00 | 3980+00 | 3990+00 | 4000+00 | 4010+00 | 4020+00 | 4030+00 | 4032+00 | TOTAL |
|---|---|---|---|---|---|---|---|---|---|
| CY Exc | | | | | | | | | |
| CY Emb | | | | | | | | | |

| REV | DATE | BY | CHK | APP | DESCRIPTION |
|---|---|---|---|---|---|

DESIGNED BY S. LITSAS
DRAWN BY E. TANAKA
CHECKED BY G. WALKER
IN CHARGE R. COFFIN
DATE 12/31/13

**RECORD SET 15% DESIGN SUBMISSION - NOT FOR CONSTRUCTION**

URS | HMM | ARUP
CALIFORNIA HIGH-SPEED TRAIN

CALIFORNIA
HIGH-SPEED RAIL AUTHORITY

# CALIFORNIA HIGH-SPEED TRAIN PROJECT
# FRESNO TO BAKERSFIELD
ALLENSWORTH BYPASS SUBSECTION
ALIGNMENT A1
STA. 3976+00 TO 4032+00
PLAN AND PROFILE

CONTRACT NO. HSR 06-0003
DRAWING NO. CB1402
SCALE AS SHOWN
SHEET NO. 3 OF 21

04/02/2014 - RFP No.: HSR 13-57

stephen.litsas 12/12/2013 4:08:20 PM c:\pwworking\hmm\external\paul.tonkin01-arup.com\d0123214\FB-CB-1402-A1.dgn

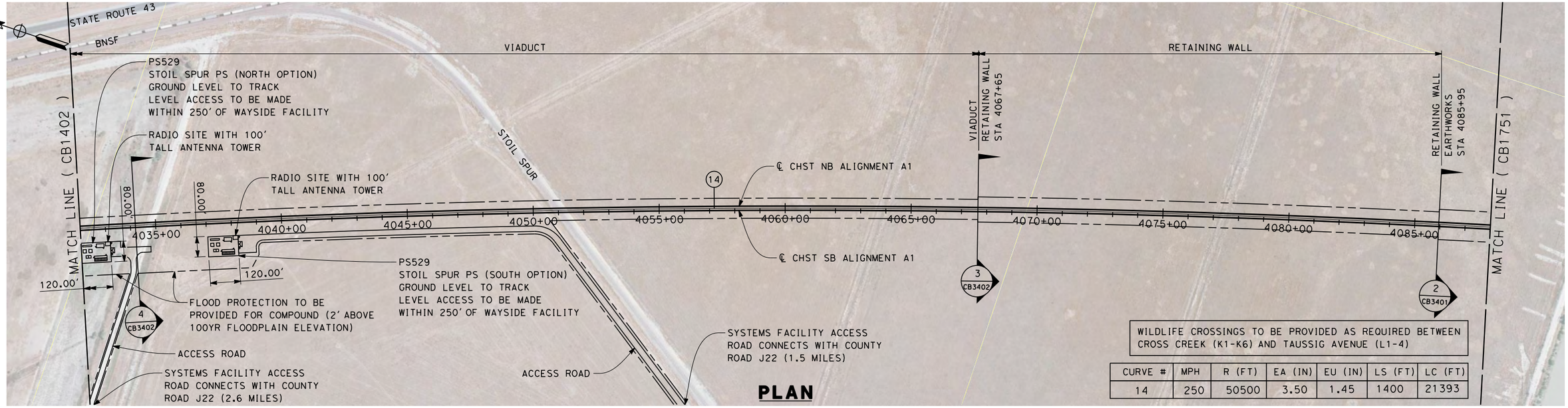


| CURVE # | MPH | R (FT) | EA (IN) | EU (IN) | LS (FT) | LC (FT) |
|---|---|---|---|---|---|---|
| 14 | 250 | 50500 | 3.50 | 1.45 | 1400 | 21393 |

**PLAN**

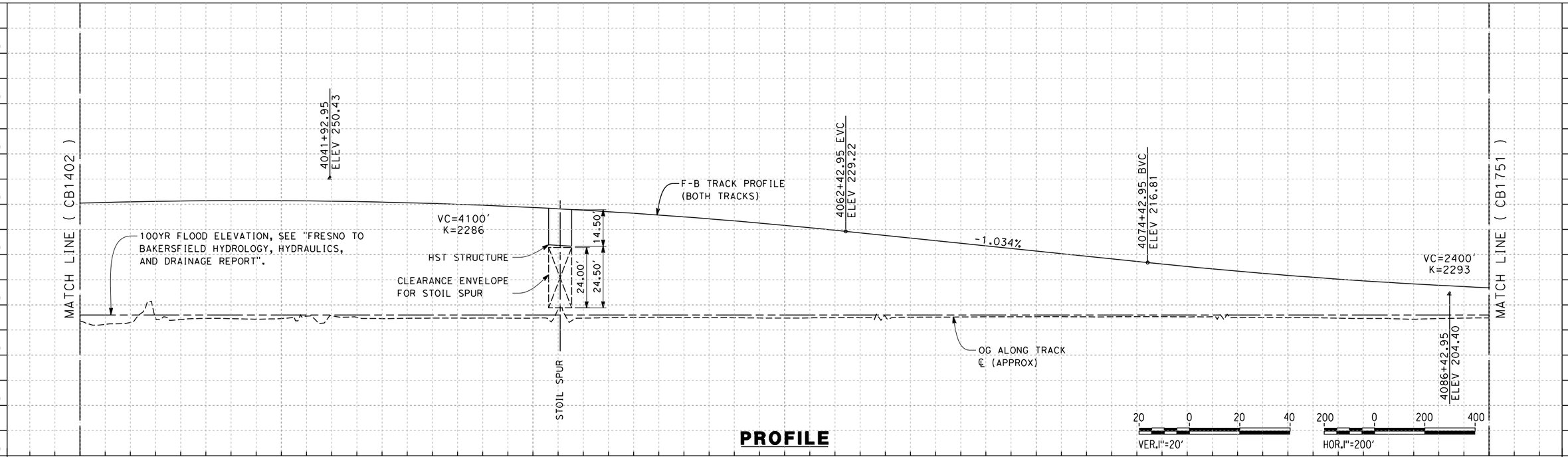


**PROFILE**

| REV | DATE | BY | CHK | APP | DESCRIPTION |
|---|---|---|---|---|---|

DESIGNED BY S. LITSAS
DRAWN BY E. TANAKA
CHECKED BY G. WALKER
IN CHARGE R. COFFIN
DATE 12/31/13

**RECORD SET 15% DESIGN SUBMISSION - NOT FOR CONSTRUCTION**

URS | HMM | ARUP
CALIFORNIA HIGH-SPEED TRAIN

CALIFORNIA HIGH-SPEED RAIL AUTHORITY

# CALIFORNIA HIGH-SPEED TRAIN PROJECT
# FRESNO TO BAKERSFIELD
ALLENSWORTH BYPASS SUBSECTION
ALIGNMENT A1
STA. 4032+00 TO 4088+00
PLAN AND PROFILE

CONTRACT NO. HSR 06-0003
DRAWING NO. CB1750
SCALE AS SHOWN
SHEET NO. 4 OF 21

04/02/2014 - RFP No.: HSR 13-57

stephen.litsas 12/12/2013 4:09:51 PM c:\pwworking\hmm\external\paul.tonkin01-arup.com\d0123214\FB-CB-1750-A1.dgn

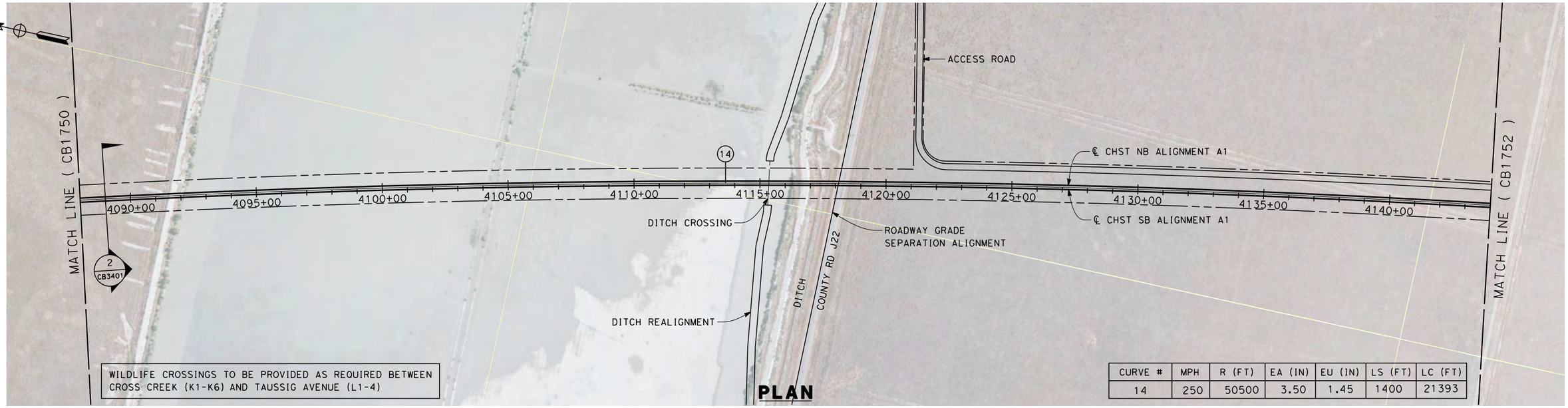


**PLAN**

| CURVE # | MPH | R (FT) | EA (IN) | EU (IN) | LS (FT) | LC (FT) |
|---|---|---|---|---|---|---|
| 14 | 250 | 50500 | 3.50 | 1.45 | 1400 | 21393 |

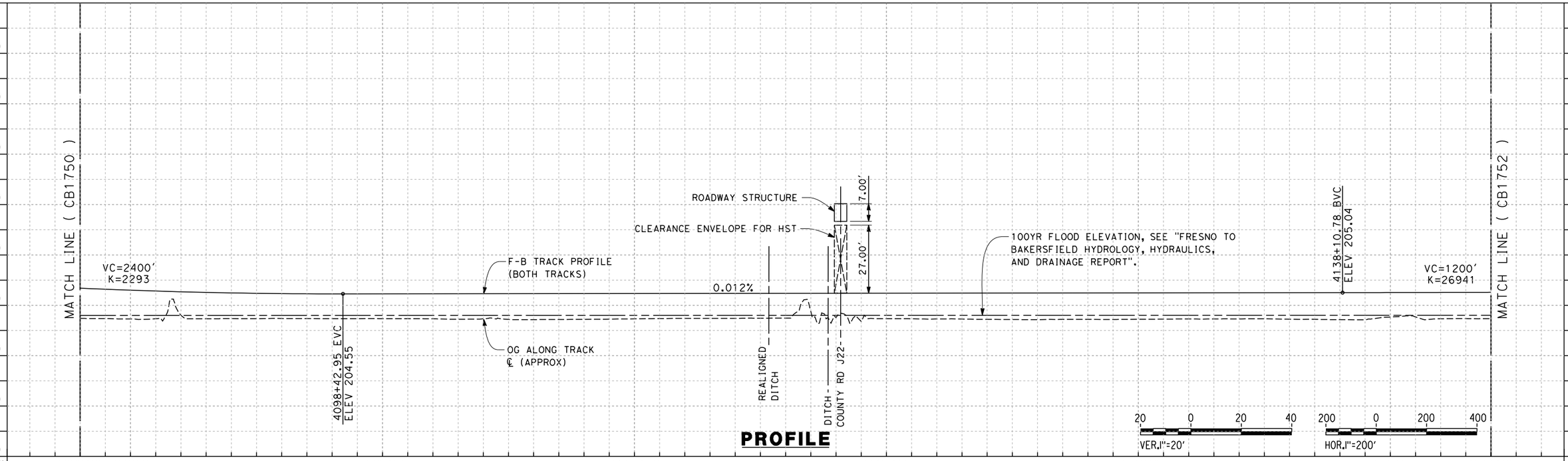


**PROFILE**

| STATION | 4088+00 | 4090+00 | 4100+00 | 4110+00 | 4120+00 | 4130+00 | 4140+00 | 4144+00 | TOTAL |
|---|---|---|---|---|---|---|---|---|---|
| CY Exc | | | | | | | | | |
| CY Emb | | | | | | | | | |

| REV | DATE | BY | CHK | APP | DESCRIPTION |
|---|---|---|---|---|---|

DESIGNED BY S. LITSAS
DRAWN BY E. TANAKA
CHECKED BY G. WALKER
IN CHARGE R. COFFIN
DATE 12/31/13

**RECORD SET 15% DESIGN SUBMISSION - NOT FOR CONSTRUCTION**

URS | HMM | ARUP
CALIFORNIA HIGH-SPEED TRAIN

CALIFORNIA HIGH-SPEED RAIL AUTHORITY

# CALIFORNIA HIGH-SPEED TRAIN PROJECT
# FRESNO TO BAKERSFIELD
ALLENSWORTH BYPASS SUBSECTION
ALIGNMENT A1
STA. 4088+00 TO 4144+00
PLAN AND PROFILE

CONTRACT NO. HSR 06-0003
DRAWING NO. CB1751
SCALE AS SHOWN
SHEET NO. 5 OF 21

04/02/2014 - RFP No.: HSR 13-57

stephen.litsas 12/12/2013 4:11:25 PM c:\pwworking\hmm\external\paul.tonkin01-arup.com\d0123214\FB-CB-1751-A1.dgn

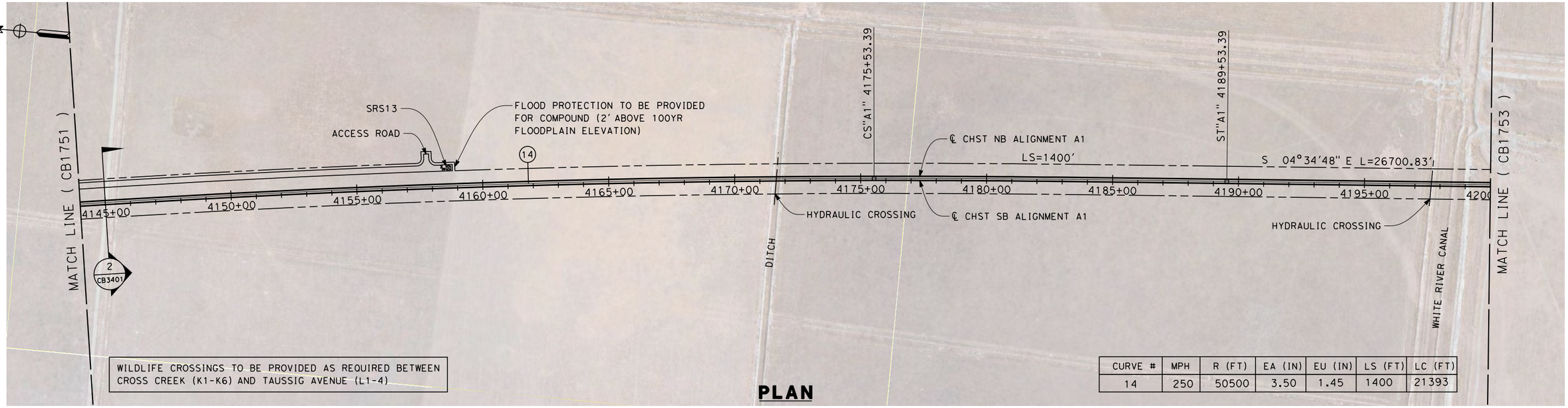


| CURVE # | MPH | R (FT) | EA (IN) | EU (IN) | LS (FT) | LC (FT) |
|---|---|---|---|---|---|---|
| 14 | 250 | 50500 | 3.50 | 1.45 | 1400 | 21393 |

**PLAN**

**PROFILE**

| REV | DATE | BY | CHK | APP | DESCRIPTION |
|---|---|---|---|---|---|

DESIGNED BY S. LITSAS
DRAWN BY E. TANAKA
CHECKED BY G. WALKER
IN CHARGE R. COFFIN
DATE 12/31/13

**RECORD SET 15% DESIGN SUBMISSION - NOT FOR CONSTRUCTION**

URS | HMM | ARUP
California High-Speed Train

CALIFORNIA HIGH-SPEED RAIL AUTHORITY

# CALIFORNIA HIGH-SPEED TRAIN PROJECT
# FRESNO TO BAKERSFIELD
ALLENSWORTH BYPASS SUBSECTION
ALIGNMENT A1
STA. 4144+00 TO 4200+00
PLAN AND PROFILE

CONTRACT NO. HSR 06-0003
DRAWING NO. CB1752
SCALE AS SHOWN
SHEET NO. 6 OF 21

04/02/2014 - RFP No.: HSR 13-57

stephen.litsas 12/12/2013 4:12:53 PM c:\pwworking\hmm\external\paul.tonkin01-arup.com\d0123214\FB-CB-1752-A1.dgn

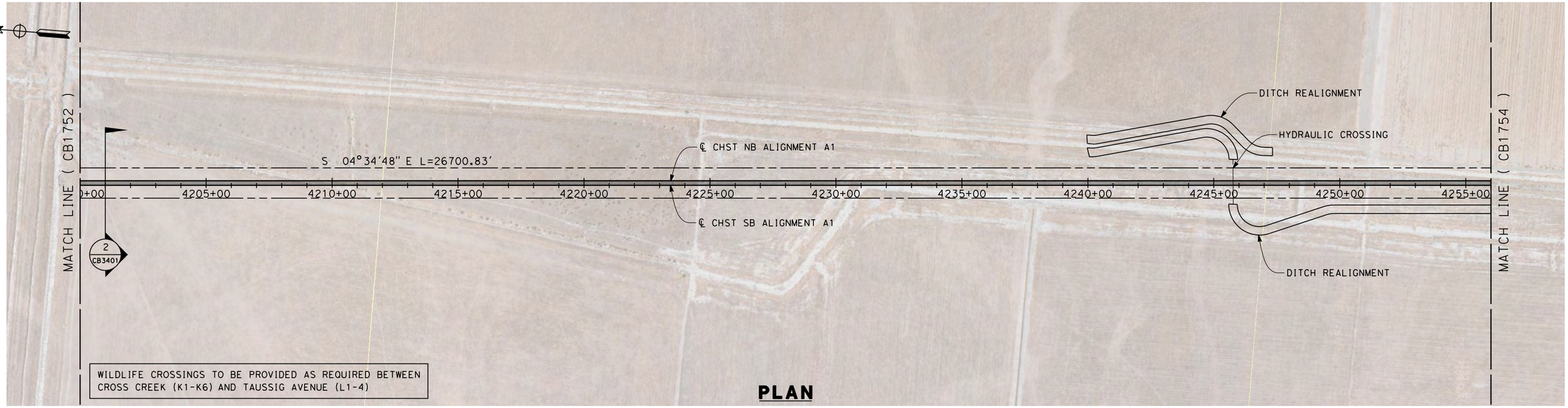


**PLAN**

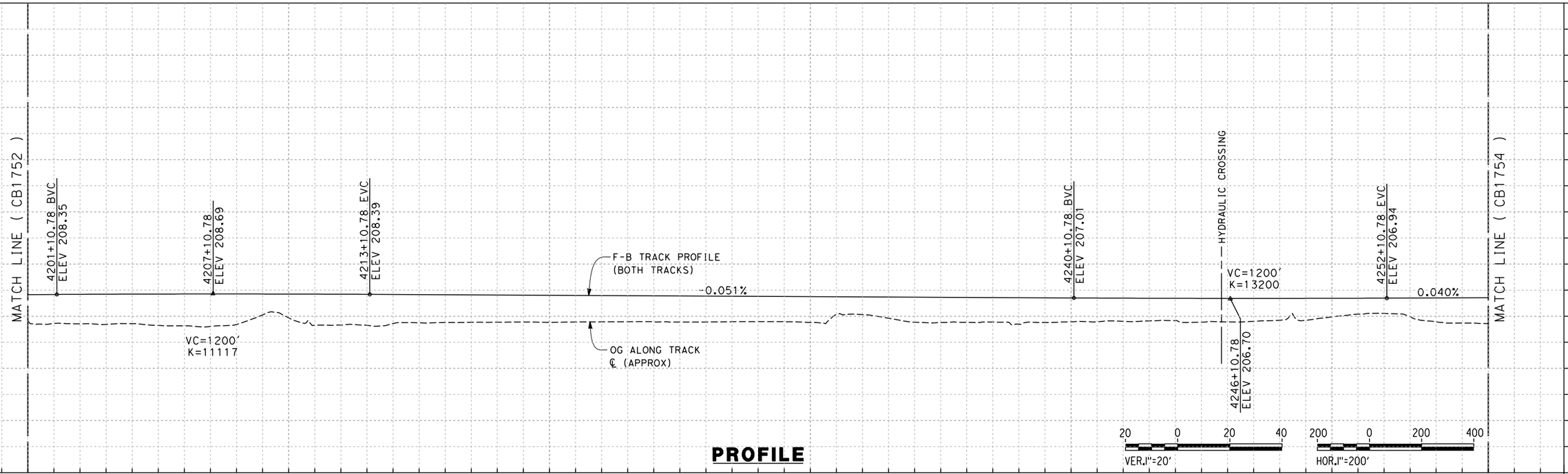


**PROFILE**

| REV | DATE | BY | CHK | APP | DESCRIPTION |
|---|---|---|---|---|---|
| | | | | | |

DESIGNED BY S. LITSAS
DRAWN BY E. TANAKA
CHECKED BY G. WALKER
IN CHARGE R. COFFIN
DATE 12/31/13

**RECORD SET 15% DESIGN SUBMISSION - NOT FOR CONSTRUCTION**

URS | HMM | ARUP
CALIFORNIA HIGH-SPEED TRAIN

CALIFORNIA
HIGH-SPEED RAIL AUTHORITY

# CALIFORNIA HIGH-SPEED TRAIN PROJECT
# FRESNO TO BAKERSFIELD
ALLENSWORTH BYPASS SUBSECTION
ALIGNMENT A1
STA. 4200+00 TO 4256+00
PLAN AND PROFILE

CONTRACT NO. HSR 06-0003
DRAWING NO. CB1753
SCALE AS SHOWN
SHEET NO. 7 OF 21

04/02/2014 - RFP No.: HSR 13-57

stephen.litsas 12/12/2013 4:14:11 PM c:\pwworking\hmm\external\paul.tonkin01-arup.com\d0123214\FB-CB-1753-A1.dgn

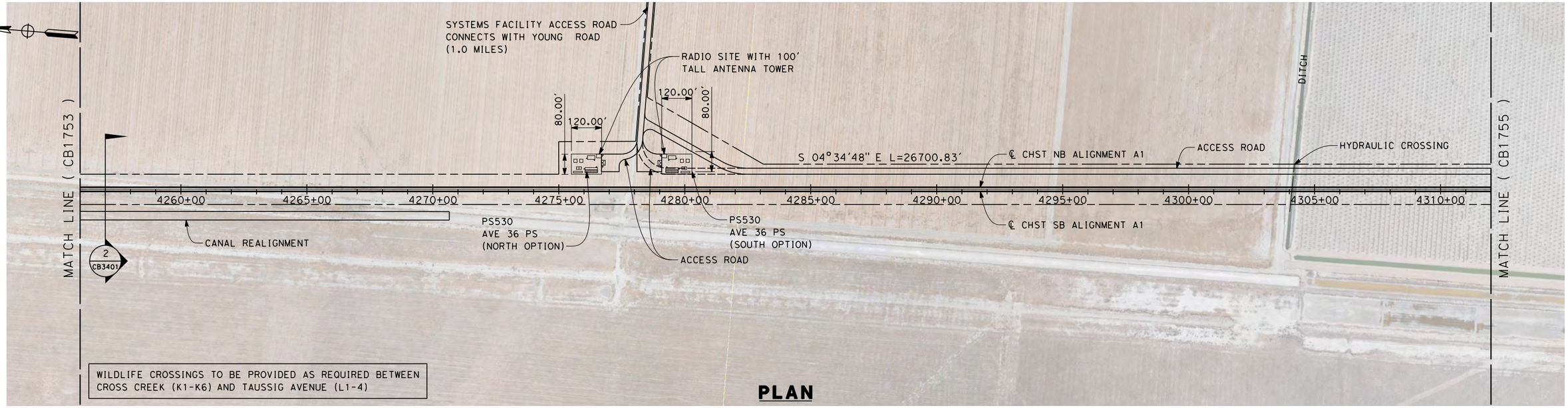


**PLAN**

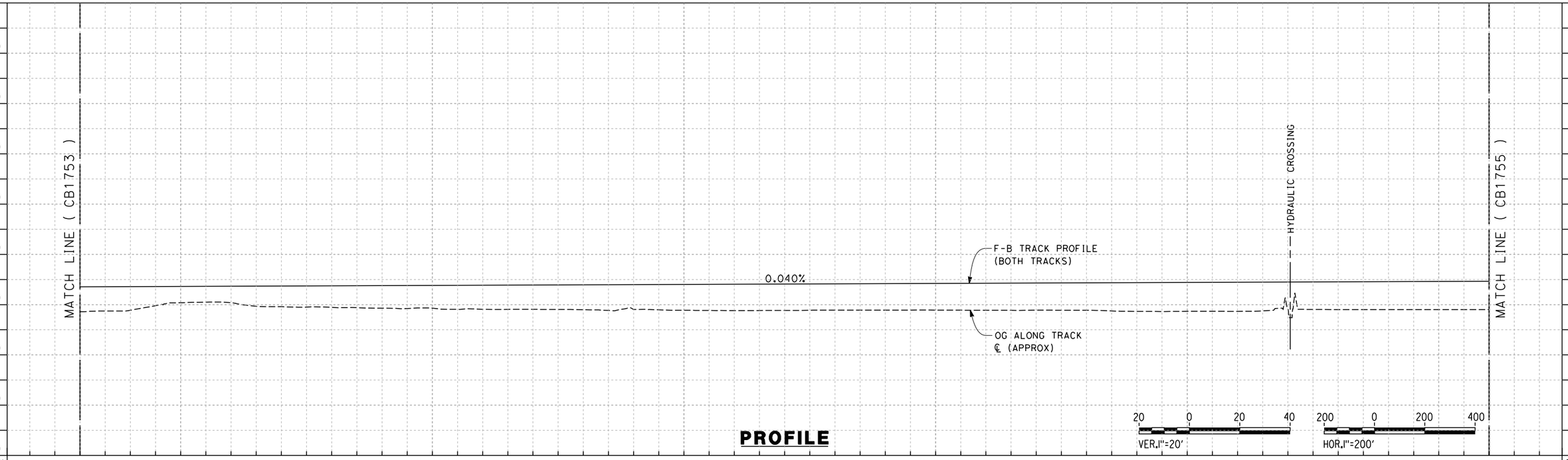


**PROFILE**

| STATION | 4256+00 | 4260+00 | 4270+00 | 4280+00 | 4290+00 | 4300+00 | 4310+00 | 4312+00 | TOTAL |
|---|---|---|---|---|---|---|---|---|---|
| CY Exc | | | | | | | | | |
| CY Emb | | | | | | | | | |

| REV | DATE | BY | CHK | APP | DESCRIPTION |
|---|---|---|---|---|---|

DESIGNED BY S. LITSAS
DRAWN BY E. TANAKA
CHECKED BY G. WALKER
IN CHARGE R. COFFIN
DATE 12/31/13

**RECORD SET 15% DESIGN SUBMISSION - NOT FOR CONSTRUCTION**

URS | HMM | ARUP
CALIFORNIA HIGH-SPEED TRAIN

CALIFORNIA HIGH-SPEED RAIL AUTHORITY

# CALIFORNIA HIGH-SPEED TRAIN PROJECT
# FRESNO TO BAKERSFIELD

ALLENSWORTH BYPASS SUBSECTION
ALIGNMENT A1
STA. 4256+00 TO 4312+00
PLAN AND PROFILE

CONTRACT NO. HSR 06-0003
DRAWING NO. CB1754
SCALE AS SHOWN
SHEET NO. 8 OF 21

04/02/2014 - RFP No.: HSR 13-57

stephen.litsas 12/12/2013 4:15:26 PM c:\pwworking\hmm\external\paul.tonkin01-arup.com\d0123214\FB-CB-1754-A1.dgn

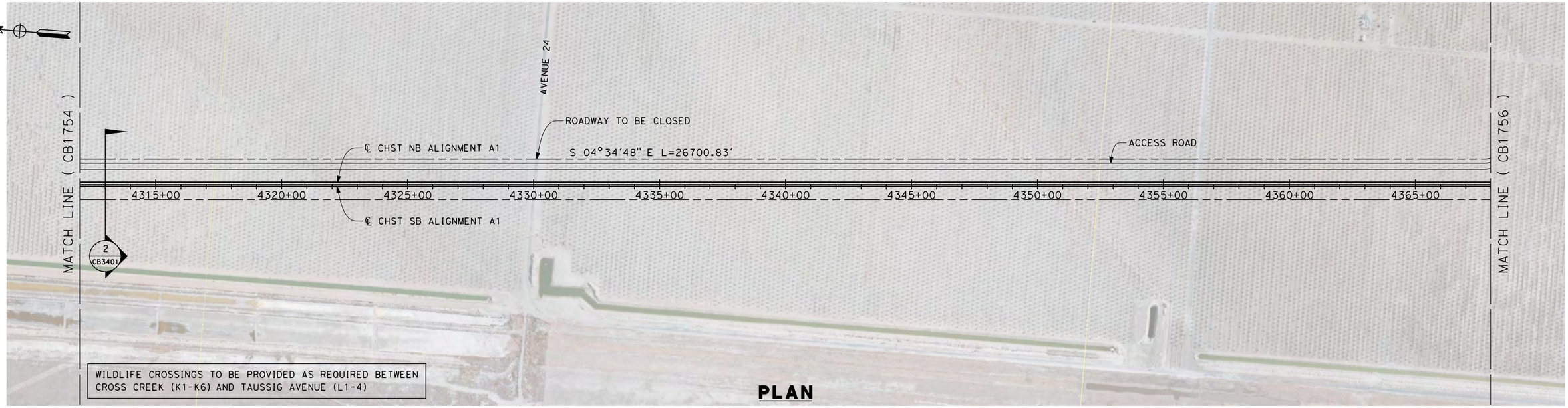


**PLAN**

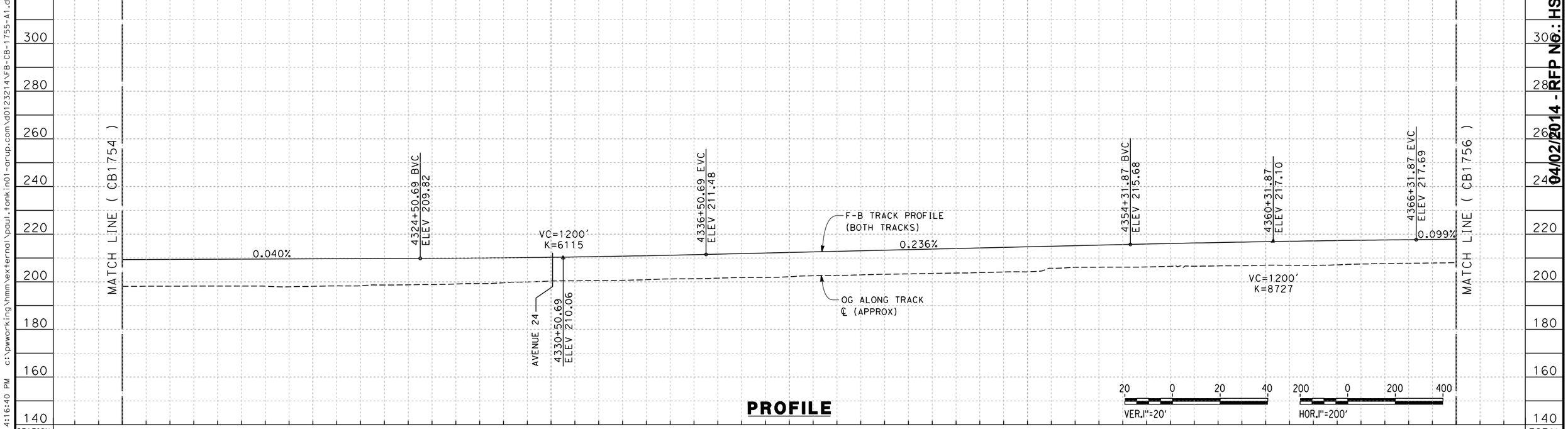


**PROFILE**

| REV | DATE | BY | CHK | APP | DESCRIPTION |
|---|---|---|---|---|---|

DESIGNED BY S. LITSAS
DRAWN BY E. TANAKA
CHECKED BY G. WALKER
IN CHARGE R. COFFIN
DATE 12/31/13

**RECORD SET 15% DESIGN SUBMISSION - NOT FOR CONSTRUCTION**

URS | HMM | ARUP
CALIFORNIA HIGH-SPEED TRAIN

CALIFORNIA HIGH-SPEED RAIL AUTHORITY

**CALIFORNIA HIGH-SPEED TRAIN PROJECT**
**FRESNO TO BAKERSFIELD**
ALLENSWORTH BYPASS SUBSECTION
ALIGNMENT A1
STA. 4312+00 TO 4368+00
PLAN AND PROFILE

CONTRACT NO. HSR 06-0003
DRAWING NO. CB1755
SCALE AS SHOWN
SHEET NO. 9 OF 21

04/02/2014 - RFP No.: HSR 13-57

c:\pwworking\hmm\external\paul.tonkin01-arup.com\d0123214\FB-CB-1755-A1.dgn
12/12/2013 4:16:40 PM
stephen.litsas

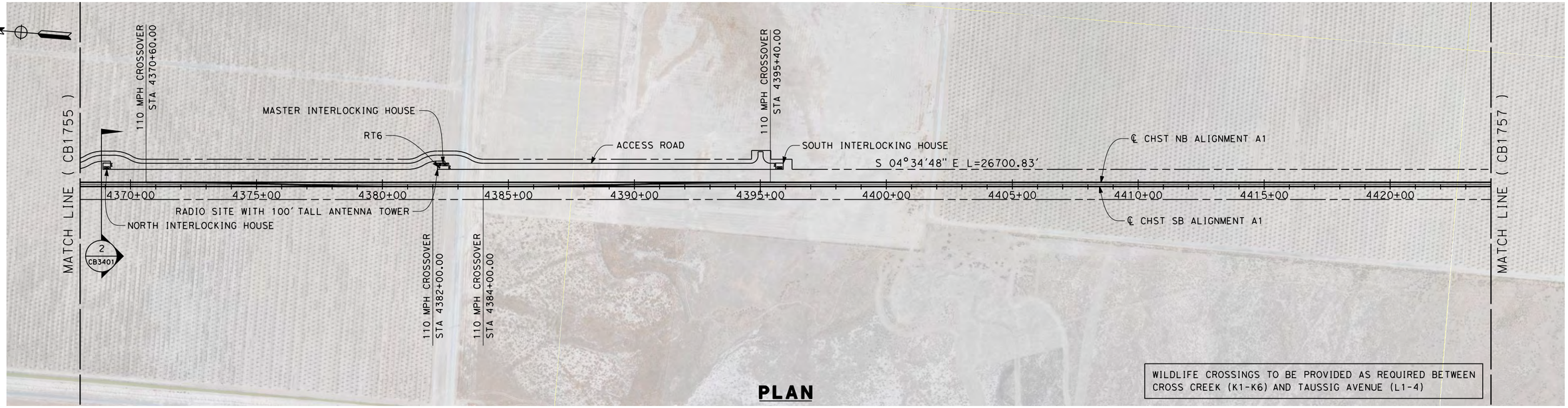


**PLAN**

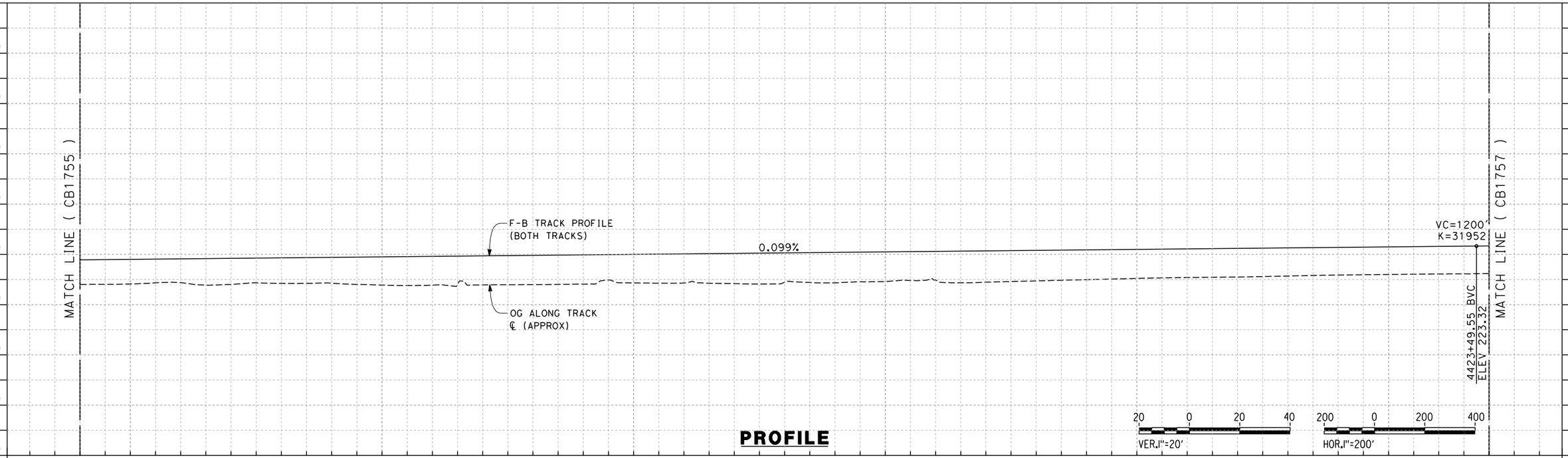


**PROFILE**

| REV | DATE | BY | CHK | APP | DESCRIPTION |
|---|---|---|---|---|---|

DESIGNED BY S. LITSAS
DRAWN BY E. TANAKA
CHECKED BY G. WALKER
IN CHARGE R. COFFIN
DATE 12/31/13

**RECORD SET 15% DESIGN SUBMISSION - NOT FOR CONSTRUCTION**

URS | HMM | ARUP
CALIFORNIA HIGH-SPEED TRAIN

CALIFORNIA HIGH-SPEED RAIL AUTHORITY

# CALIFORNIA HIGH-SPEED TRAIN PROJECT
# FRESNO TO BAKERSFIELD

ALLENSWORTH BYPASS SUBSECTION
ALIGNMENT A1
STA. 4368+00 TO 4424+00
PLAN AND PROFILE

CONTRACT NO. HSR 06-0003
DRAWING NO. CB1756
SCALE AS SHOWN
SHEET NO. 10 OF 21

04/02/2014 - RFP No.: HSR 13-57

12/12/2013 4:18:02 PM c:\pwworking\hmm\external\paul.tonkin01-arup.com\d0123214\FB-CB-1756-A1.dgn
stephen.litsas

**PLAN**

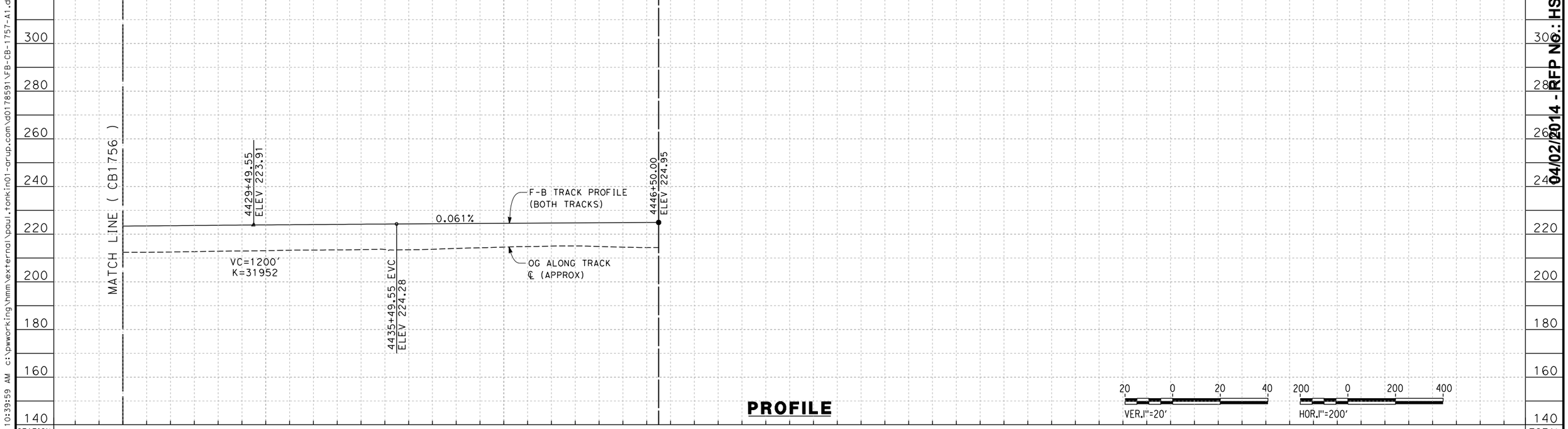


**PROFILE**

04/02/2014 - RFP No.: HSR 13-57

| REV | DATE | BY | CHK | APP | DESCRIPTION |
|---|---|---|---|---|---|

DESIGNED BY S. LITSAS
DRAWN BY E. TANAKA
CHECKED BY G. WALKER
IN CHARGE R. COFFIN
DATE 02/04/14

**RECORD SET 15% DESIGN SUBMISSION - NOT FOR CONSTRUCTION**

URS | HMM | ARUP
CALIFORNIA HIGH-SPEED TRAIN

CALIFORNIA
HIGH-SPEED RAIL AUTHORITY

# CALIFORNIA HIGH-SPEED TRAIN PROJECT
# FRESNO TO BAKERSFIELD

ALLENSWORTH BYPASS SUBSECTION
ALIGNMENT A1
STA. 4424+00 TO 4480+00
PLAN AND PROFILE

CONTRACT NO. HSR 06-0003
DRAWING NO. CB1757
SCALE AS SHOWN
SHEET NO. 11 OF 21

2/7/2014 10:39:59 AM c:\pwworking\hmm\external\paul.tonkin01-arup.com\d0178591\FB-CB-1757-A1.dgn paul.tonkin

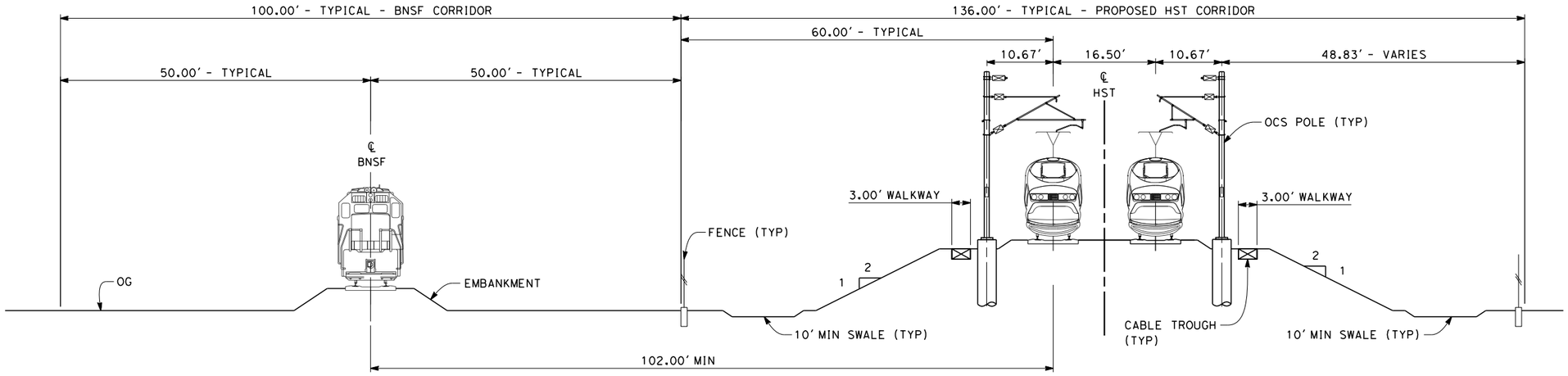


## SECTION 1

TWIN TRACK - ADJACENT TO SINGLE TRACK BNSF
STA 3919+50 THROUGH STA 3967+75

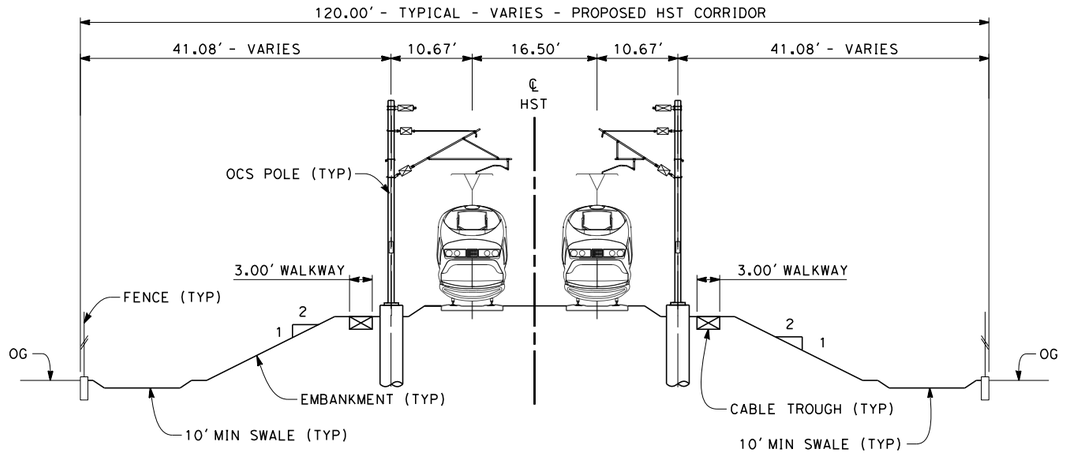


## SECTION 2

TWIN TRACK - AT-GRADE WITH OPEN DRAINAGE
STA 3967+75 THROUGH STA 3982+20
STA 4085+95 THROUGH STA 4925+51.33

NOTES:

1. TRACKFORM SHOWN IS INDICATIVE
2. FOR STRUCTURE DIMENSIONS SEE STRUCTURAL CROSS SECTIONS
3. SUPERELEVATION IS NOT SHOWN. THE AMOUNT OF APPLIED SUPERELEVATION IS SHOWN IN THE CURVE DATA TABLES.

10 0 10 20
1"=10'

| REV | DATE | BY | CHK | APP | DESCRIPTION |
|---|---|---|---|---|---|

DESIGNED BY S. LITSAS
DRAWN BY E. TANAKA
CHECKED BY G. WALKER
IN CHARGE R. COFFIN
DATE 12/31/13

RECORD SET 15% DESIGN SUBMISSION - NOT FOR CONSTRUCTION

URS | HMM | ARUP
CALIFORNIA HIGH-SPEED TRAIN

CALIFORNIA HIGH-SPEED RAIL AUTHORITY

**CALIFORNIA HIGH-SPEED TRAIN PROJECT**
**FRESNO TO BAKERSFIELD**
ALLENSWORTH BYPASS SUBSECTION
ALIGNMENT A1
TYPICAL SECTIONS

CONTRACT NO. HSR 06-0003
DRAWING NO. CB3401
SCALE AS SHOWN
SHEET NO. 20 OF 21

04/02/2014 - RFP No.: HSR 13-57

stephen.litsas 12/12/2013 4:26:45 PM c:\pwworking\hmm\external\paul.tonkin01-arup.com\d0123214\VFB-CB-3401-A1.dgn

NOTES:

1. TRACKFORM SHOWN IS INDICATIVE
2. FOR STRUCTURE DIMENSIONS SEE STRUCTURAL CROSS SECTIONS
3. SUPERELEVATION IS NOT SHOWN. THE AMOUNT OF APPLIED SUPERELEVATION IS SHOWN IN THE CURVE DATA TABLES.

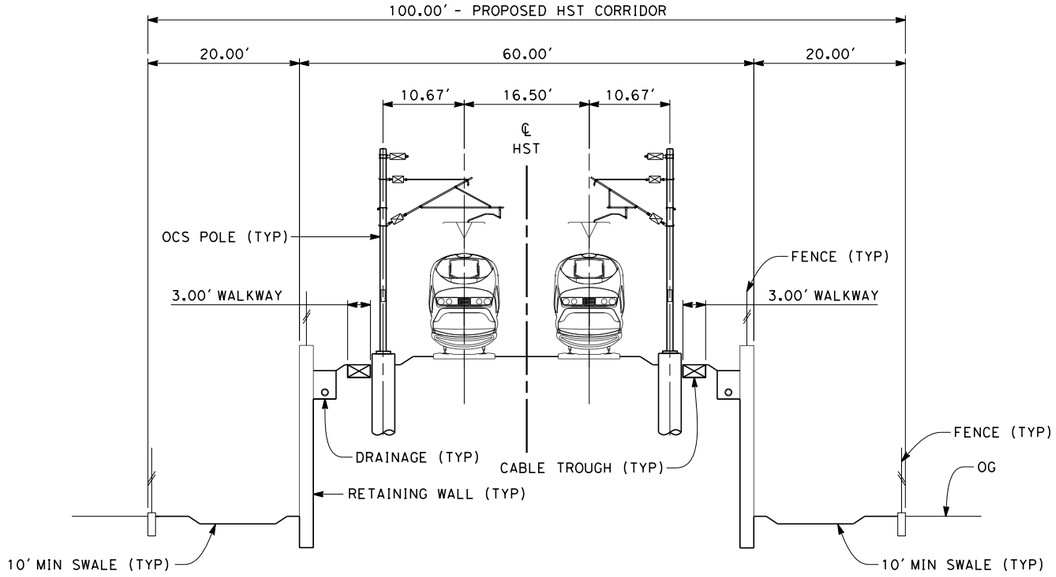


## SECTION 3

TWIN TRACK - RETAINED EMBANKMENT
STA 3982+20 THROUGH STA 4005+25
STA 4067+65 THROUGH STA 4085+95

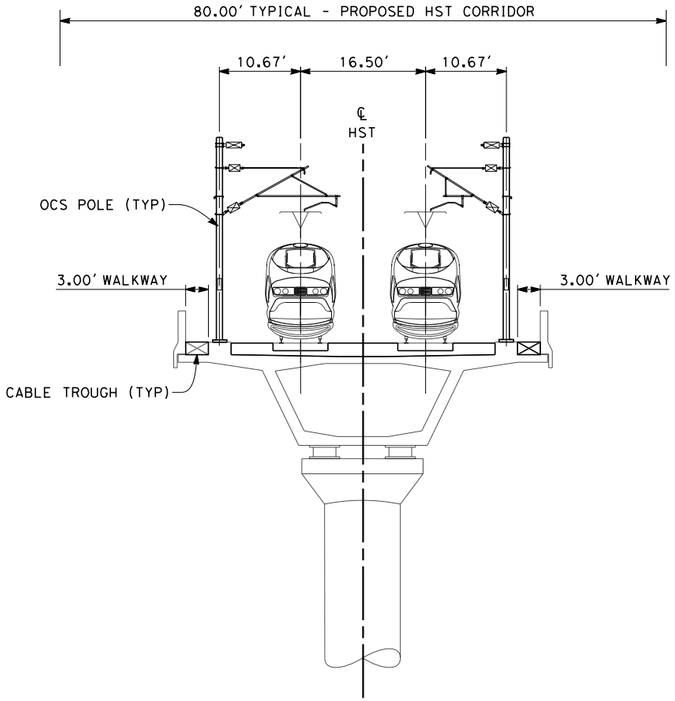


## SECTION 4

TWIN TRACK - AERIAL VIADUCT
STA 4005+25 THROUGH STA 4067+65

10 0 10 20
1"=10'

04/02/2014 - RFP No.: HSR 13-57

| REV | DATE | BY | CHK | APP | DESCRIPTION |
|---|---|---|---|---|---|

DESIGNED BY S. LITSAS
DRAWN BY E. TANAKA
CHECKED BY G. WALKER
IN CHARGE R. COFFIN
DATE 12/31/13

RECORD SET 15% DESIGN SUBMISSION - NOT FOR CONSTRUCTION

URS | HMM | ARUP
California High-Speed Train

CALIFORNIA HIGH-SPEED RAIL AUTHORITY

# CALIFORNIA HIGH-SPEED TRAIN PROJECT FRESNO TO BAKERSFIELD

ALLENSWORTH BYPASS SUBSECTION
ALIGNMENT A1
TYPICAL SECTIONS

CONTRACT NO. HSR 06-0003
DRAWING NO. CB3402
SCALE AS SHOWN
SHEET NO. 21 OF 21

stephen.litsas 12/12/2013 4:27:09 PM c:\pwworking\hmm\external\paul.tonkin01-arup.com\d0123214\VFB-CB-3402-A1.dgn

# CALIFORNIA HIGH-SPEED TRAIN

## HST Structure Plans

# RECORD SET 15% DESIGN SUBMISSION

# Fresno to Bakersfield

## Plans and Elevations and Typical Sections

December 2013

CALIFORNIA High-Speed Rail Authority

04/02/2014 - RFP No.: HSR 13-57

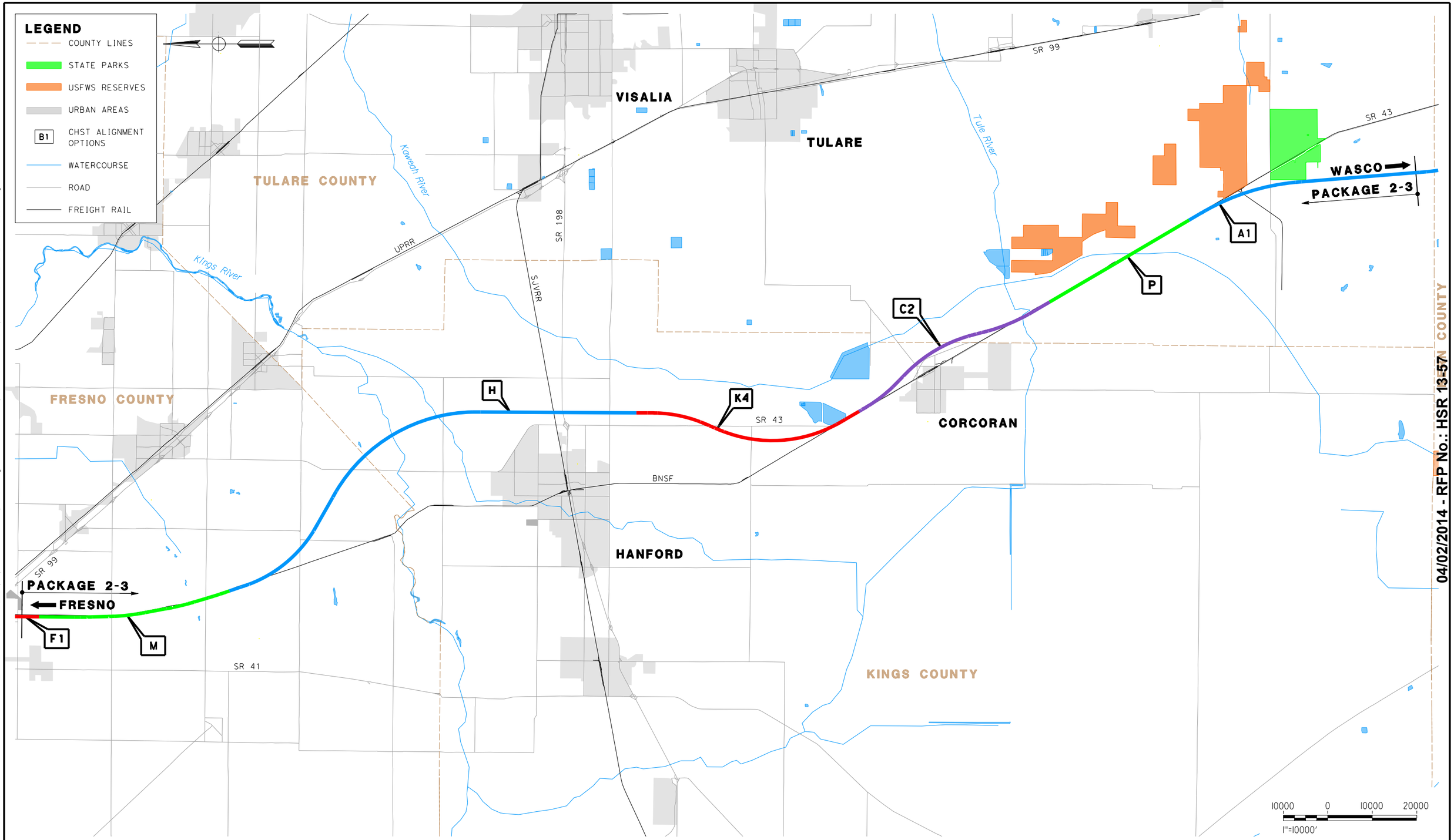


| REV | DATE | BY | CHK | APP | DESCRIPTION |
|---|---|---|---|---|---|

DESIGNED BY K. SEYMOUR
DRAWN BY P. TONKIN
CHECKED BY D. HUNT
IN CHARGE R. COFFIN
DATE 02/04/14

**PROPOSED PRELIMINARY DESIGN**

**NOT FOR CONSTRUCTION**

URS | HMM | ARUP
CALIFORNIA HIGH-SPEED TRAIN

CALIFORNIA HIGH-SPEED RAIL AUTHORITY

# CALIFORNIA HIGH-SPEED TRAIN PROJECT
## FRESNO TO BAKERSFIELD
PACKAGE 2-3
ALIGNMENT
LOCATION MAP

CONTRACT NO. HSR 06-0003
DRAWING NO. TT-B0001
SCALE AS SHOWN
SHEET NO. 1 OF 5

04/02/2014 - RFP No.: HSR 13-57

c:\pwworking\hmm\external\paul.tonkin01-arup.com\d0178203\2S-TT-B0001.dgn
paul.tonkin 1/31/2014 9:25:46 AM CAHSRP-r1.tbl CHSR_PDF_half_color_200dpi.plt

## GENERAL SHEETS

| DRAWING No | DRAWING DESCRIPTION | SHEET No |
|---|---|---|
| TT-B0001 | ALIGNMENT - LOCATION MAP | 1 OF 5 |
| GE-A0024 | HST STRUCTURES - INDEX OF SHEETS (SHEET 1 OF 2) | 2 OF 5 |
| GE-A0025 | HST STRUCTURES - INDEX OF SHEETS (SHEET 2 OF 2) | 3 OF 5 |
| CB0010 | GENERAL - ABBREVIATIONS AND LEGENDS - SHEET 1 OF 2 | 4 OF 5 |
| CB0011 | GENERAL - ABBREVIATIONS AND LEGENDS - SHEET 2 OF 2 | 5 OF 5 |

## ALIGNMENT H - CONEJO VIADUCT

| DRAWING No | DRAWING DESCRIPTION | SHEET No |
|---|---|---|
| SV2220 | HANFORD SUBSECTION - ALIGNMENT H - CONEJO VIADUCT - KEY MAP | 1 OF 8 |
| SV2221 | HANFORD SUBSECTION - ALIGNMENT H - CONEJO VIADUCT - PLAN AND ELEVATION | 2 OF 8 |
| SV2222 | HANFORD SUBSECTION - ALIGNMENT H - CONEJO VIADUCT - PLAN AND ELEVATION | 3 OF 8 |
| SV2223 | HANFORD SUBSECTION - ALIGNMENT H - CONEJO VIADUCT - PLAN AND ELEVATION | 4 OF 8 |
| SV2224 | HANFORD SUBSECTION - ALIGNMENT H - CONEJO VIADUCT - PLAN AND ELEVATION | 5 OF 8 |
| SV2225 | HANFORD SUBSECTION - ALIGNMENT H - CONEJO VIADUCT - PLAN AND ELEVATION | 6 OF 8 |
| SV2226 | HANFORD SUBSECTION - ALIGNMENT H - CONEJO VIADUCT - PLAN AND ELEVATION | 7 OF 8 |
| SV2227 | HANFORD SUBSECTION - ALIGNMENT H - CONEJO VIADUCT - TYPICAL SECTIONS | 8 OF 8 |

## ALIGNMENT H - KINGS RIVER VIADUCT

| DRAWING No | DRAWING DESCRIPTION | SHEET No |
|---|---|---|
| SV2258 | HANFORD SUBSECTION - ALIGNMENT H - KINGS RIVER VIADUCT - KEY MAP | 1 OF 18 |
| SV2259 | HANFORD SUBSECTION - ALIGNMENT H - KINGS RIVER VIADUCT - PLAN AND ELEVATION | 2 OF 18 |
| SV2260 | HANFORD SUBSECTION - ALIGNMENT H - KINGS RIVER VIADUCT - PLAN AND ELEVATION | 3 OF 18 |
| SV2261 | HANFORD SUBSECTION - ALIGNMENT H - KINGS RIVER VIADUCT - PLAN AND ELEVATION | 4 OF 18 |
| SV2262 | HANFORD SUBSECTION - ALIGNMENT H - KINGS RIVER VIADUCT - PLAN AND ELEVATION | 5 OF 18 |
| SV2263 | HANFORD SUBSECTION - ALIGNMENT H - KINGS RIVER VIADUCT - PLAN AND ELEVATION | 6 OF 18 |
| SV2264 | HANFORD SUBSECTION - ALIGNMENT H - KINGS RIVER VIADUCT - PLAN AND ELEVATION | 7 OF 18 |
| SV2265 | HANFORD SUBSECTION - ALIGNMENT H - KINGS RIVER VIADUCT - PLAN AND ELEVATION | 8 OF 18 |
| SV2266 | HANFORD SUBSECTION - ALIGNMENT H - KINGS RIVER VIADUCT - PLAN AND ELEVATION | 9 OF 18 |
| SV2267 | HANFORD SUBSECTION - ALIGNMENT H - KINGS RIVER VIADUCT - PLAN AND ELEVATION | 10 OF 18 |
| SV2268 | HANFORD SUBSECTION - ALIGNMENT H - KINGS RIVER VIADUCT - PLAN AND ELEVATION | 11 OF 18 |
| SV2269 | HANFORD SUBSECTION - ALIGNMENT H - KINGS RIVER VIADUCT - PLAN AND ELEVATION | 12 OF 18 |
| SV2270 | HANFORD SUBSECTION - ALIGNMENT H - KINGS RIVER VIADUCT - PLAN AND ELEVATION | 13 OF 18 |
| SV2271 | HANFORD SUBSECTION - ALIGNMENT H - KINGS RIVER VIADUCT - PLAN AND ELEVATION | 14 OF 18 |
| SV2272 | HANFORD SUBSECTION - ALIGNMENT H - KINGS RIVER VIADUCT - PLAN AND ELEVATION | 15 OF 18 |
| SV2273 | HANFORD SUBSECTION - ALIGNMENT H - KINGS RIVER VIADUCT - PLAN AND ELEVATION | 16 OF 18 |
| SV2274 | HANFORD SUBSECTION - ALIGNMENT H - KINGS RIVER VIADUCT - TYPICAL SECTIONS | 17 OF 18 |
| SV2275 | HANFORD SUBSECTION - ALIGNMENT H - KINGS RIVER VIADUCT - TYPICAL SECTIONS | 18 OF 18 |

## ALIGNMENT H - HANFORD VIADUCT

| DRAWING No | DRAWING DESCRIPTION | SHEET No |
|---|---|---|
| SV2300 | HANFORD SUBSECTION - ALIGNMENT H - HANFORD VIADUCT - KEY MAP | 1 OF 14 |
| SV2301 | HANFORD SUBSECTION - ALIGNMENT H - HANFORD VIADUCT - PLAN AND ELEVATION | 2 OF 14 |
| SV2302 | HANFORD SUBSECTION - ALIGNMENT H - HANFORD VIADUCT - PLAN AND ELEVATION | 3 OF 14 |
| SV2303 | HANFORD SUBSECTION - ALIGNMENT H - HANFORD VIADUCT - PLAN AND ELEVATION | 4 OF 14 |
| SV2304 | HANFORD SUBSECTION - ALIGNMENT H - HANFORD VIADUCT - PLAN AND ELEVATION | 5 OF 14 |
| SV2305 | HANFORD SUBSECTION - ALIGNMENT H - HANFORD VIADUCT - PLAN AND ELEVATION | 6 OF 14 |
| SV2306 | HANFORD SUBSECTION - ALIGNMENT H - HANFORD VIADUCT - PLAN AND ELEVATION | 7 OF 14 |
| SV2307 | HANFORD SUBSECTION - ALIGNMENT H - HANFORD VIADUCT - PLAN AND ELEVATION | 8 OF 14 |
| SV2308 | HANFORD SUBSECTION - ALIGNMENT H - HANFORD VIADUCT - PLAN AND ELEVATION | 9 OF 14 |
| SV2309 | HANFORD SUBSECTION - ALIGNMENT H - HANFORD VIADUCT - PLAN AND ELEVATION | 10 OF 14 |
| SV2310 | HANFORD SUBSECTION - ALIGNMENT H - HANFORD VIADUCT - PLAN AND ELEVATION | 11 OF 14 |
| SV2311 | HANFORD SUBSECTION - ALIGNMENT H - HANFORD VIADUCT - PLAN AND ELEVATION | 12 OF 14 |
| SV2312 | HANFORD SUBSECTION - ALIGNMENT H - HANFORD VIADUCT - TYPICAL SECTIONS | 13 OF 14 |
| SV2313 | HANFORD SUBSECTION - ALIGNMENT H - HANFORD VIADUCT - TYPICAL SECTIONS | 14 OF 14 |

## ALIGNMENT K4 - STATE ROUTE 43 UNDERPASS

| DRAWING No | DRAWING DESCRIPTION | SHEET No |
|---|---|---|
| SV2450 | KAWEAH SUBSECTION - ALIGNMENT K4 - STATE ROUTE 43 UNDERPASS - KEY MAP | 1 OF 3 |
| SV2451 | KAWEAH SUBSECTION - ALIGNMENT K4 - STATE ROUTE 43 UNDERPASS - PLAN AND ELEVATION | 2 OF 3 |
| SV2452 | KAWEAH SUBSECTION - ALIGNMENT K4 - STATE ROUTE 43 UNDERPASS - TYPICAL SECTIONS | 3 OF 3 |

## ALIGNMENT K4 - CROSS CREEK VIADUCT

| DRAWING No | DRAWING DESCRIPTION | SHEET No |
|---|---|---|
| SV2460 | KAWEAH SUBSECTION - ALIGNMENT K4 - CROSS CREEK VIADUCT - KEY MAP | 1 OF 13 |
| SV2461 | KAWEAH SUBSECTION - ALIGNMENT K4 - CROSS CREEK VIADUCT - PLAN AND ELEVATION | 2 OF 13 |
| SV2462 | KAWEAH SUBSECTION - ALIGNMENT K4 - CROSS CREEK VIADUCT - PLAN AND ELEVATION | 3 OF 13 |
| SV2463 | KAWEAH SUBSECTION - ALIGNMENT K4 - CROSS CREEK VIADUCT - PLAN AND ELEVATION | 4 OF 13 |
| SV2465 | KAWEAH SUBSECTION - ALIGNMENT K4 - CROSS CREEK VIADUCT - PLAN AND ELEVATION | 6 OF 13 |
| SV2466 | KAWEAH SUBSECTION - ALIGNMENT K4 - CROSS CREEK VIADUCT - PLAN AND ELEVATION | 7 OF 13 |
| SV2467 | KAWEAH SUBSECTION - ALIGNMENT K4 - CROSS CREEK VIADUCT - PLAN AND ELEVATION | 8 OF 13 |
| SV2468 | KAWEAH SUBSECTION - ALIGNMENT K4 - CROSS CREEK VIADUCT - PLAN AND ELEVATION | 9 OF 13 |
| SV2469 | KAWEAH SUBSECTION - ALIGNMENT K4 - CROSS CREEK VIADUCT - PLAN AND ELEVATION | 10 OF 13 |
| SV2470 | KAWEAH SUBSECTION - ALIGNMENT K4 - CROSS CREEK VIADUCT - PLAN AND ELEVATION | 11 OF 13 |
| SV2471 | KAWEAH SUBSECTION - ALIGNMENT K4 - CROSS CREEK VIADUCT - PLAN AND ELEVATION | 12 OF 13 |
| SV2472 | KAWEAH SUBSECTION - ALIGNMENT K4 - CROSS CREEK VIADUCT - TYPICAL SECTIONS | 13 OF 13 |

04/02/2014 - RFP No.: HSR 13-57

c:\pwworking\hmm\external\frank.palermo01-arup.com\d0178203\25-GE-A0024.dgn
frank.palermo 1/27/2014 11:55:58 AM CAHSRP-r1.tbl CHSR_PDF_half_black_200dpi.plt

| REV | DATE | BY | CHK | APP | DESCRIPTION |
|---|---|---|---|---|---|

DESIGNED BY P. TONKIN
DRAWN BY J. VALENZUELA
CHECKED BY K. SEYMOUR
IN CHARGE R. COFFIN
DATE 02/04/14

**PROPOSED PRELIMINARY DESIGN**

**NOT FOR CONSTRUCTION**

URS | HMM | ARUP
CALIFORNIA HIGH-SPEED TRAIN

CALIFORNIA
HIGH-SPEED RAIL AUTHORITY

**CALIFORNIA HIGH-SPEED TRAIN PROJECT**
**FRESNO TO BAKERSFIELD**
HST STRUCTURES
INDEX OF SHEETS
SHEET 1 OF 2

CONTRACT NO. HSR 06-0003
DRAWING NO. GE-A0024
SCALE NO SCALE
SHEET NO. 2 OF 5

## ALIGNMENT C2 - WHITLEY AVE UNDERPASS

| DRAWING No | DRAWING DESCRIPTION | SHEET No |
|---|---|---|
| SV2445 | CORCORAN BYPASS SUBSECTION - ALIGNMENT C2 - WHITLEY AVENUE/SR137 UNDERPASS - KEY MAP | 1 OF 2 |
| SV2446 | CORCORAN BYPASS SUBSECTION - ALIGNMENT C2 - WHITLEY AVENUE/SR137 UNDERPASS - PLAN AND ELEVATION | 2 OF 2 |

## ALIGNMENT C2 - STATE ROUTE 43 BNSF VIADUCT

| DRAWING No | DRAWING DESCRIPTION | SHEET No |
|---|---|---|
| SV2490 | CORCORAN BYPASS SUBSECTION - ALIGNMENT C2 - STATE ROUTE 43 BNSF VIADUCT - KEY MAP | 1 OF 11 |
| SV2491 | CORCORAN BYPASS SUBSECTION - ALIGNMENT C2 - STATE ROUTE 43 BNSF VIADUCT - PLAN AND ELEVATION | 2 OF 11 |
| SV2492 | CORCORAN BYPASS SUBSECTION - ALIGNMENT C2 - STATE ROUTE 43 BNSF VIADUCT - PLAN AND ELEVATION | 3 OF 11 |
| SV2493 | CORCORAN BYPASS SUBSECTION - ALIGNMENT C2 - STATE ROUTE 43 BNSF VIADUCT - PLAN AND ELEVATION | 4 OF 11 |
| SV2494 | CORCORAN BYPASS SUBSECTION - ALIGNMENT C2 - STATE ROUTE 43 BNSF VIADUCT - PLAN AND ELEVATION | 5 OF 11 |
| SV2495 | CORCORAN BYPASS SUBSECTION - ALIGNMENT C2 - STATE ROUTE 43 BNSF VIADUCT - PLAN AND ELEVATION | 6 OF 11 |
| SV2496 | CORCORAN BYPASS SUBSECTION - ALIGNMENT C2 - STATE ROUTE 43 BNSF VIADUCT - PLAN AND ELEVATION | 7 OF 11 |
| SV2497 | CORCORAN BYPASS SUBSECTION - ALIGNMENT C2 - STATE ROUTE 43 BNSF VIADUCT - PLAN AND ELEVATION | 8 OF 11 |
| SV2499 | CORCORAN BYPASS SUBSECTION - ALIGNMENT C2 - STATE ROUTE 43 BNSF VIADUCT - TYPICAL SECTIONS | 9 OF 11 |
| SV2500 | CORCORAN BYPASS SUBSECTION - ALIGNMENT C2 - STATE ROUTE 43 BNSF VIADUCT - TYPICAL SECTIONS | 10 OF 11 |
| SV2501 | CORCORAN BYPASS SUBSECTION - ALIGNMENT C2 - STATE ROUTE 43 BNSF VIADUCT - TYPICAL SECTIONS | 11 OF 11 |

## ALIGNMENT A1 - DEER CREEK VIADUCT

| DRAWING No | DRAWING DESCRIPTION | SHEET No |
|---|---|---|
| SV1500 | ALLENSWORTH BYPASS SUBSECTION - ALIGNMENT A1 - DEER CREEK VIADUCT - KEY MAP | 1 OF 9 |
| SV1501 | ALLENSWORTH BYPASS SUBSECTION - ALIGNMENT A1 - DEER CREEK VIADUCT - PLAN AND ELEVATION | 2 OF 9 |
| SV1502 | ALLENSWORTH BYPASS SUBSECTION - ALIGNMENT A1 - DEER CREEK VIADUCT - PLAN AND ELEVATION | 3 OF 9 |
| SV1503 | ALLENSWORTH BYPASS SUBSECTION - ALIGNMENT A1 - DEER CREEK VIADUCT - PLAN AND ELEVATION | 4 OF 9 |
| SV1504 | ALLENSWORTH BYPASS SUBSECTION - ALIGNMENT A1 - DEER CREEK VIADUCT - PLAN AND ELEVATION | 5 OF 9 |
| SV1505 | ALLENSWORTH BYPASS SUBSECTION - ALIGNMENT A1 - DEER CREEK VIADUCT - PLAN AND ELEVATION | 6 OF 9 |
| SV1506 | ALLENSWORTH BYPASS SUBSECTION - ALIGNMENT A1 - DEER CREEK VIADUCT - PLAN AND ELEVATION | 7 OF 9 |
| SV1507 | ALLENSWORTH BYPASS SUBSECTION - ALIGNMENT A1 - DEER CREEK VIADUCT - PLAN AND ELEVATION | 8 OF 9 |
| SV1508 | ALLENSWORTH BYPASS SUBSECTION - ALIGNMENT A1 - DEER CREEK VIADUCT - TYPICAL SECTIONS | 9 OF 9 |

04/02/2014 - RFP No.: HSR 13-57

frank.palermo 1/27/2014 11:58:36 AM CAHSRP-r1.tbl CHSR_PDF_half_black_200dpi.plt c:\pwworking\hmm\external\frank.palermo01-arup.com\d0178203\25-GE-A0025.dgn

| REV | DATE | BY | CHK | APP | DESCRIPTION |
|---|---|---|---|---|---|

DESIGNED BY P. TONKIN
DRAWN BY J. VALENZUELA
CHECKED BY K. SEYMOUR
IN CHARGE R. COFFIN
DATE 02/04/14

**PROPOSED PRELIMINARY DESIGN**

**NOT FOR CONSTRUCTION**

URS | HMM | ARUP
CALIFORNIA HIGH-SPEED TRAIN

CALIFORNIA
HIGH-SPEED RAIL AUTHORITY

**CALIFORNIA HIGH-SPEED TRAIN PROJECT**
**FRESNO TO BAKERSFIELD**
HST STRUCTURES
INDEX OF SHEETS
SHEET 2 OF 2

CONTRACT NO. HSR 06-0003
DRAWING NO. GE-A0025
SCALE NO SCALE
SHEET NO. 3 OF 5

## A

| | |
|---|---|
| AB | AGGREGATE BASE |
| ABBC | ASBESTOS BONDED BITUMINOUS COATED |
| ABM | AIR-BLOWN MORTAR |
| ABN | ABANDON |
| ABUT | ABUTMENT |
| AC | ASPHALT CONCRETE |
| ACB | ASPHALT CONCRETE BASE |
| ACP | ASBESTOS CEMENT PIPE |
| ADL | ADDED DEAD LOAD |
| ADJ | ADJUST |
| AFES | ALTERNATIVE FLARED END SECTION |
| AHD | AHEAD |
| ALT | ALTERNATE |
| AM | TIME FROM MIDNIGHT TO NOON |
| AP | ALTERNATIVE PIPE |
| APC | ALTERNATIVE PIPE CULVERT |
| APPROX | APPROXIMATE |
| APU | ALTERNATIVE PIPE UNDERDRAIN |
| ARS | ACCELERATION RESPONSE SPECTRUM |
| AR | ACCESS RESTRICTION |
| AS | AGGREGATE SUBBASE |
| ASRP | ALUMINUM SPIRAL RIB PIPE |
| ASSY | ASSEMBLY |
| ATPB | ASPHALT TREATED PERMEABLE BASE |
| ATPM | ASPHALT TREATED PERMEABLE MATERIAL |
| AVE | AVENUE |
| AVG | AVERAGE |
| @ | AT |

## B

| | |
|---|---|
| BAGR | BRIDGE APPROACH GUARD RAILING |
| BB | BEGINNING OF BRIDGE |
| BC | BEGIN HORIZONTAL CURVE |
| BCC | BALANCED CANTILEVER CONSTRUCTION |
| BCR | BEGIN CURB RETURN |
| BEG | BEGIN |
| BIT CTD | BITUMINOUS COATED |
| BK | BACK |
| BKF | BACKFILL |
| BLDG | BUILDING |
| BLM | BRIDGE-LOG MILE |
| BLVD | BOULEVARD |
| BM | BENCH MARK |
| BND | BOUND |
| BNSF | BURLINGTON NORTH & SANTA FE |
| BOT | BOTTOM |
| BR | BRIDGE |
| BRG | BEARING |
| BTU | BRITISH THERMAL UNIT |
| BVC | BEGIN VERTICAL CURVE |
| BW | BARBED WIRE |

## C

| | |
|---|---|
| CAA | CABLE ANCHOR ASSEMBLY |
| CAP | CORRUGATED ALUMINUM PIPE |
| CAPA | CORRUGATED ALUMINUM PIPE ARCH |
| CAS | CONSTRUCTION AREA SIGN |
| CB | CONCRETE BARRIER |
| CBW | CONCRETE BLOCK WALL |
| C-C | CENTER TO CENTER |

## C CONTINUED

| | |
|---|---|
| CHSRA | CALIFORNIA HIGH SPEED RAIL AUTHORITY |
| CHST | CALIFORNIA HIGH SPEED TRAIN |
| CHSR | CALIFORNIA HIGH SPEED RAIL |
| CG | CENTER OF GRAVITY |
| CHNL | CHANNEL |
| CI | CAST IRON |
| CIDH | CAST-IN-DRILLED-HOLE |
| CIP,C-I-P | CAST-IN-PLACE, CAST IRON PIPE |
| CIPCP | CAST IN PLACE CONCRETE PIPE |
| CISS | CAST-IN-STEEL-SHELL |
| CJP | COMPLETE JOINT PENETRATION |
| CL | CENTERLINE, CLASS |
| CL2 | CLASS 2 |
| CL-6 | CHAIN LINK FENCE (6 FT) |
| CLR | CLEAR, CLEARANCE |
| CM | CORRUGATED METAL |
| CMP | CORRUGATED METAL PIPE |
| CO | COUNTY |
| COL | COLUMN |
| CONC | CONCRETE |
| COND | CONDUIT |
| CONN | CONNECTOR |
| CONST | CONSTRUCT, CONSTRUCTION |
| CONT | CONTINUOUS |
| COORD | COORDINATE |
| CP | CLEARANCE POINT |
| CR | CREEK |
| CRCP | CONTINUOUS REINFORCED CONCRETE PAVEMENT |
| CRSP | CONCRETED ROCK SLOPE PROTECTION |
| CS | CURVE TO SPIRAL |
| CSP | CORRUGATED STEEL PIPE |
| CSPA | CORRUGATED STEEL PIPE ARCH |
| CTB | CEMENT TREATED BASE |
| CTPB | CEMENT TREATED PERMEABLE BASE |
| CTPM | CEMENT TREATED PERMEABLE MATERIAL |
| CTRS | CENTERS |
| CVFPB | CENTRAL VALLEY FLOOD PROTECTION BOARD |
| CULV | CULVERT |
| ℄ | CENTERLINE |

## D

| | |
|---|---|
| D | DEPTH |
| DD | DOWNDRAIN, DIRECTIVE DRILLING |
| DBL | DOUBLE |
| DEG | DEGREE |
| DEL | DELINEATOR |
| DET | DETAIL, DETOUR |
| DF | DOUGLAS FIR |
| DI | DRAINAGE INLET, DROP INLET |
| DIA | DIAMETER |
| DIAPH | DIAPHRAGM |
| DIST | DISTANCE, DISTRICT |
| DMBB | DOUBLE METAL BEAM BARRIER |
| DR | DRIVE |
| DTBB | DOUBLE THRIE BEAM BARRIER |
| DWY | DRIVEWAY |

## E

| | |
|---|---|
| E | EAST, EASTING |
| EA | ACTUAL SUPERELEVATION |
| EU | UNBALANCED SUPERELEVATION |

## E CONTINUED

| | |
|---|---|
| EASE | EASEMENT |
| EB | END OF BRIDGE, EASTBOUND |
| EC | END HORIZONTAL CURVE |
| ECR | END CURB RETURN |
| ED | EDGE DRAIN |
| EDC | EDGE DRAIN CLEANOUT |
| EDO | EDGE DRAIN OUTLET |
| EDV | EDGE DRAIN VENT |
| ELEC | ELECTROLIER |
| ELECT | ELECTRIC |
| ELEV | ELEVATION |
| EMB | EMBANKMENT |
| ENGR | ENGINEER |
| EOD | EDGE OF DECK |
| EP | EDGE OF PAVEMENT |
| EQ | EQUATION, EQUAL |
| ES | EDGE OF SHOULDER |
| ETW | EDGE OF TRAVELED WAY |
| EVC | END VERTICAL CURVE |
| EW | ENDWALL |
| EXC | EXCAVATION |
| EXIST, EX. | EXISTING |
| EXP | EXPANSION |
| EXP JT | EXPANSION JOINT |
| EXWY | EXPRESSWAY |
| EXT | EXTERIOR |

## F

| | |
|---|---|
| F & C | FRAME AND COVER |
| F & G | FRAME AND GRATE |
| FB | FLOOR BEAM |
| F-B | FRESNO TO BAKERSFIELD |
| FDN | FOUNDATION |
| FEBT | FACING EASTBOUND TRAFFIC |
| FES | FLARED END SECTION |
| FF | FILTER FABRIC |
| FG | FINISHED GRADE |
| FH | FIRE HYDRANT |
| FIG | FIGURE |
| FL | FLOW LINE |
| FNBT | FACING NORTHBOUND TRAFFIC |
| FOC | FACE OF CONCRETE |
| FR RD | FRONTAGE ROAD |
| FS | FAR SIDE, FINISHED SURFACE |
| FSBT | FACING SOUTHBOUND TRAFFIC |
| FT | FOOT, FEET |
| FTG | FOOTING |
| FWBT | FACING WESTBOUND TRAFFIC |
| FWY | FREEWAY |
| FPLM | FULL SPAN PRECAST LAUNCHING METHOD |

## G

| | |
|---|---|
| G | ACCELERATION DUE TO GRAVITY |
| GA | GAGE |
| GALV | GALVANIZED |
| GP | GRADING PLANE |
| GR | GUARD RAILING |
| GSP | GALVANIZED STEEL PIPE |
| GTR | GUTTER |

## H

| | |
|---|---|
| H | HEIGHT |
| HR | HOUR |
| HD | HORIZONTAL DRAIN |
| HDWL | HEADWALL |
| HEX HD | HEXAGONAL HEAD |
| HMA | HOT MIXED ASPHALT |
| HORIZ | HORIZONTAL |
| HP | HINGE POINT, HORSEPOWER |
| HPS | HIGH PERFORMANCE STEEL |
| HS | HIGH STRENGTH |
| HST | HIGH SPEED TRAIN |
| HSR | HIGH SPEED RAIL |
| HW | HEADWALL, HIGH WATER |
| HWM | HIGH WATER MARK |
| HWY | HIGHWAY |

## I

| | |
|---|---|
| IB | IMPORTED BORROW |
| ID | INSIDE DIAMETER |
| IF | INSIDE FACE |
| IN | INCH, INCHES |
| INT | INTERIOR |
| INV | INVERT |
| IRR | IRRIGATION |

## J

| | |
|---|---|
| JCT | JUNCTION |
| JP | JOINT POLE |
| JPCP | JOINTED PLAIN CONCRETE PAVEMENT |
| JS | JUNCTION STRUCTURE |
| JT | JOINT |

## K

| | |
|---|---|
| K | DISTANCE TO ACHIEVE 1% GRADE CHANGE |

## L

| | |
|---|---|
| L | LENGTH |
| LAT | LATITUDE |
| LCB | LEAN CONCRETE BASE |
| LN | LANE |
| LOC | LOCATION |
| LOL | LAYOUT LINE |
| LONG | LONGITUDE |
| LONGIT | LONGITUDINAL |
| LS | LENGTH OF SPIRAL |
| LC | LENGTH OF CURVE |
| LT | LEFT |

## M

| | |
|---|---|
| MAINT | MAINTENANCE |
| MAX | MAXIMUM |
| MB | METAL BEAM |
| MBB | METAL BEAM BARRIER |
| MBGR | METAL BEAM GUARD RAILING |
| MED | MEDIAN |
| M-F | MERCED TO FRESNO |
| MH | MANHOLE |
| MIN | MINIMUM |
| MISC | MISCELLANEOUS |
| MISC I & S | MISCELLANEOUS IRON AND STEEL |
| MKR | MARKER |
| M/L | MAIN LINE (RAILWAY) |

## M CONTINUED

| | |
|---|---|
| MOD | MODIFIED, MODIFY |
| MON | MONUMENT |
| MP | METAL PLATE |
| MPGR | METAL PLATE GUARD RAILING |
| MPH | MILES PER HOUR |
| MR | MOVEMENT RATING |
| MSE | MECHANICALLY STABILIZED EARTH |
| MTL | MATERIAL |
| MSS | MOVING SCAFFOLDING SYSTEM |

## N

| | |
|---|---|
| N | NORTH, NORTHING |
| NB | NORTHBOUND |
| NO. | NUMBER (MUST HAVE PERIOD) |
| NOS. | NUMBERS (MUST HAVE PERIOD) |
| NPS | NOMINAL PIPE SIZE |
| NS | NEAR SIDE |
| NTS | NOT TO SCALE |
| N/A | NOT APPLICABLE |

## O

| | |
|---|---|
| OBLR | OBLITERATE |
| OC | OVERCROSSING |
| OCS | OVERHEAD CONTACT SYSTEM |
| OD | OUTSIDE DIAMETER |
| OF | OUTSIDE FACE |
| OG | ORIGINAL GROUND |
| OGAC | OPEN GRADED ASPHALT CONCRETE |
| OH | OVERHEAD |
| O-O | OUT TO OUT |
| OPP | OPPOSITE |

## P

| | |
|---|---|
| P | PAGE |
| PAP | PERFORATED ALUMINUM PIPE |
| PB | PULL BOX |
| PC | POINT OF CURVATURE, PRECAST |
| PCC | POINT OF COMPOUND CURVE, PORTLAND CEMENT CONCRETE |
| PCP | PERFORATED CONCRETE PIPE, PRESTRESSED CONCRETE PIPE |
| PCVC | POINT OF COMPOUND VERTICAL CURVE |
| PED | PEDESTRIAN |
| PED OC | PEDESTRIAN OVERCROSSING |
| PED UC | PEDESTRIAN UNDERCROSSING |
| PERM MTL | PERMEABLE MATERIAL |
| PG | PROFILE GRADE |
| PI | POINT OF INTERSECTION |
| PJP | PARTIAL JOINT PENETRATION |
| ℙ,PL | PLATE |
| P/L | PROPERTY LINE |
| PM | POST MILE, TIME FROM NOON TO MIDNIGHT |
| PN | PAVING NOTCH |
| POB | POINT OF BEGINNING |
| POC | POINT OF HORIZONTAL CURVE |
| POE | POINT OF ENDING |
| POT | POINT OF TANGENT |
| POVC | POINT OF VERTICAL CURVE |
| PP | PIPE PILE, PLASTIC PIPE, POWER POLE |
| PPL | PREFORMED PERMEABLE LINER |
| PPP | PERFORATED PLASTIC PIPE |
| PRC | POINT OF REVERSE CURVE |

04/02/2014 - RFP No.: HSR 13-57

| REV | DATE | BY | CHK | APP | DESCRIPTION |
|---|---|---|---|---|---|

DESIGNED BY K. SEYMOUR
DRAWN BY P. TONKIN
CHECKED BY D. HUNT
IN CHARGE R. COFFIN
DATE 02/04/14

**RECORD SET 15% DESIGN SUBMISSION - NOT FOR CONSTRUCTION**

URS | HMM | ARUP
CALIFORNIA HIGH-SPEED TRAIN

CALIFORNIA
HIGH-SPEED RAIL AUTHORITY

# CALIFORNIA HIGH-SPEED TRAIN PROJECT
# FRESNO TO BAKERSFIELD
GENERAL
ABBREVIATIONS AND LEGENDS
SHEET 1 OF 2

CONTRACT NO. HSR 06-0003
DRAWING NO. CB0010
SCALE NO SCALE
SHEET NO. 4 OF 5

Paul.Tonkin 1/27/2014 6:08:20 PM c:\pwworking\hmm\external\paul.tonkin01-arup.com\d0178203\VFB-CB-0010.dgn

## P CONTINUED

| | |
|---|---|
| PRF | PAVEMENT REINFORCING FABRIC |
| PRVC | POINT OF REVERSE VERTICAL CURVE |
| PS&E | PLANS, SPECIFICATIONS AND ESTIMATES |
| PS, P/S | PRESTRESSED, PARALLEL STATION |
| PSP | PERFORATED STEEL PIPE |
| PT | POINT OF TANGENCY |
| PVC | POLYVINYL CHLORIDE |
| PVI | POINT OF VERTICAL INTERSECTION |
| PVMT | PAVEMENT |
| PVP | MAINTENANCE VEHICLE PULLOUT |

## Q

| | |
|---|---|
| QTY | QUANTITY |

## R

| | |
|---|---|
| R | RADIUS |
| R & D | REMOVE AND DISPOSE |
| R & S | REMOVE AND SALVAGE |
| R/C | RATE OF CHANGE |
| RCA | REINFORCED CONCRETE ARCH |
| RCB | REINFORCED CONCRETE BOX |
| RCP | REINFORCED CONCRETE PIPE |
| RCPA | REINFORCED CONCRETE PIPE ARCH |
| RD | ROAD |
| REINF | REINFORCED, REINFORCEMENT, REINFORCING |
| REL | RELOCATE |
| REPL | REPLACEMENT |
| RET | RETAINING |
| REV | REVISED |
| RDWY | ROADWAY |
| RM | ROAD-MIXED |
| RP | RADIUS POINT, REFERENCE POINT |
| RR | RAILROAD |
| RSP | ROCK SLOPE PROTECTION |
| RT | RIGHT |
| RTE | ROUTE |
| RW | REDWOOD, RETAINING WALL |
| R/W, ROW | RIGHT OF WAY |
| RWY | RAILWAY |

## S

| | |
|---|---|
| S | SOUTH, SUPPLEMENT |
| SAE | STRUCTURE APPROACH EMBANKMENT |
| SALV | SALVAGE |
| SAPP | STRUCTURAL ALUMINUM PLATE PIPE |
| SB | SOUTHBOUND |
| SC | SPIRAL TO CURVE |
| SCSP | SLOTTED CORRUGATED STEEL PIPE |
| SD | STORM DRAIN |
| SEC | SECOND |
| SECT | SECTION |
| SEP | SEPARATION |
| SG | SUBGRADE |
| SHLD | SHOULDER |
| SHT | SHEET |
| SIM | SIMILAR |
| S | STATION LINE |
| SM | SELECTED MATERIAL |
| SPEC | SPECIAL, SPECIFICATIONS |
| SPP | SLOTTED PLASTIC PIPE |
| SS | SLOPE STAKE, SPIRAL TO SPIRAL |

## S CONTINUED

| | |
|---|---|
| SSBM | STRAP AND SADDLE BRACKET METHOD |
| SSD | STRUCTURAL SECTION DRAIN |
| SSPA | STRUCTURAL STEEL PLATE ARCH |
| SSPP | STRUCTURAL STEEL PLATE PIPE |
| SSPPA | STRUCTURAL STEEL PLATE PIPE ARCH |
| SSRP | STEEL SPIRAL RIB PIPE |
| SR | STATE ROUTE |
| ST | STREET, SPIRAL TO TANGENT |
| STA | STATION |
| STBB | SINGLE THRIE BEAM BARRIER |
| STD | STANDARD |
| STR | STRUCTURE |
| SRS | STAND ALONE RADIO SITE |
| SURF | SURFACING |
| SW | SIDEWALK, SOUND WALL |
| SWR | SEWER |
| SWS | SWITCHING STATION |
| SYM | SYMMETRICAL |
| S4S | SURFACE 4 SIDES |
| SJVR | SAN JOAQUIN VALLEY RAILROAD |

## T

| | |
|---|---|
| T | SEMI-TANGENT |
| TAB | TABLET |
| TAN | TANGENT |
| TBB | THRIE BEAM BARRIER |
| TBR | TIMBER |
| TC | TOP OF CURB, TANGENT TO CURVE |
| TCB | TRAFFIC CONTROL BOX |
| TEL | TELEPHONE |
| TEMP | TEMPORARY |
| TG | TOP OF GRADE |
| TOT | TOTAL |
| TM | TECHNICAL MEMORANDUM |
| TP | TELEPHONE POLE |
| TPB | TREATED PERMEABLE BASE |
| TPM | TREATED PERMEABLE MATERIAL |
| TPSS | TRACTION POWER SUPPLY STATION |
| TRANS | TRANSITION, TRANSVERSE |
| TS | TRAFFIC SIGNAL, TUBULAR STEEL, TANGET TO SPIRAL |
| TYP | TYPICAL |
| TOR | TOP OF RAIL |

## U

| | |
|---|---|
| UC | UNDERCROSSING |
| UD | UNDERDRAIN |
| UON | UNLESS OTHERWISE NOTED |
| UP | UNDERPASS |
| UPRR | UNION PACIFIC RAILROAD |
| USFWS | UNITED STATES FISH AND WILDLIFE SERVICE |

## V

| | |
|---|---|
| V | VALVE, DESIGN SPEED |
| VAR | VARIABLE |
| VC | VERTICAL CURVE |
| VCP | VITRIFIED CLAY PIPE |
| VERT | VERTICAL |
| VIA | VIADUCT |
| VOL | VOLUME |

## W

| | |
|---|---|
| W | WEST, WIDTH |
| WB | WESTBOUND |
| WH | WEEP HOLE |
| WM | WIRE MESH |
| WS | WATER SURFACE |
| WSP | WELDED STEEL PIPE |
| WT | WEIGHT |
| WV | WATER VALVE |
| WW | WINGWALL |
| WWLOL | WINGWALL LAYOUT LINE |
| W/ | WITH |

## X

| | |
|---|---|
| X SEC | CROSS SECTION |
| XING | CROSSING |

## Y

| | |
|---|---|
| YR | YEAR |
| YRS | YEARS |

## LEGEND

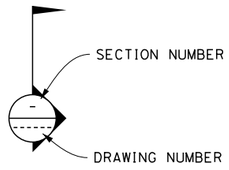


PROPOSED ELECTRICITY LINE

EXISTING ELECTRICITY LINE

EXISTING OVERHEAD ELECTRICITY LINE

PROPOSED OVERHEAD ELECTRICTY LINE

PROPOSED HST RIGHT OF WAY

PROPOSED HST TRACK CENTERLINE

RETAINING WALL

TOE OF SLOPE / TOP OF CUT

PROPOSED TEMPORARY CONSTRUCTION EASEMENT

CONTROL LINE EXAMPLE "A" LINE

255+00 260+00 265+00

OR

TRACK (PLAN AND ELEVATION)

REL

TRACK TO BE REMOVED AND RELOCATED PER BNSF

REMOVE BASE & SURFACING

SOUND BARRIER (POTENTIAL)

DIRECTION OF FLOW

WATER SURFACE

## GENERAL NOTES

1. TRACK PROFILE IS DESIGNED AS TOP OF THE LOW RAIL. VERTICAL CLEARANCE REQUIREMENTS ARE MEASURED FROM THE TOP OF THE HIGH RAIL ON SUPERELEVATED TRACK. THE CLEARANCE ENVELOPES SHOWN DEMONSTRATE THE MINIMUM CLEARANCE REQUIREMENTS.

2. MINIMUM VERTICAL CLEARANCE REQUIREMENTS TO CANALS AND DITCHES ARE NOT KNOWN. FURTHER CONSULTATION WITH THE WATERCOURSE OWNERS WILL BE REQUIRED TO DETERMINE NECESSARY CLEARANCES.

3. THE FOLLOWING ARE ROADWAY DESIGN STANDARDS AND GUIDELINES:
   A. CALTRANS HIGHWAY DESIGN MANUAL (2012)
   B. AASHTO A POLICY ON GEOMETRIC DESIGN OF HIGHWAYS AND STREETS (2011)
   C. AASHTO ROADSIDE DESIGN GUIDE (2011)
   D. APPLICABLE LOCAL DESIGN STANDARD AND GUIDELINES (I.E., CITY OF FRESNO)

4. THE FEMA FLOODPLAIN BOUNDARIES ARE CALLED OUT AS "LIMIT OF 100YR FEMA FLOODPLAIN". THE LIMITS OF THE MODELED 100 YEAR WATER SURFACE ELEVATIONS (WSE) ARE APPROXIMATE AND ARE MARKED WITH THE NAME OF THE WATERBODY ASSOCIATED WITH THE MODELED FLOODING, E.G. "LIMIT OF POSO CREEK FLOODPLAIN".

5. THE STRUCTURE DESIGN ASSUMES THAT THE DEPTH FROM TOR TO TOP OF DECK IS 2'-6" THROUGHOUT. HOWEVER, WHERE BALLASTED TRACK FORM IS USED, THE HEIGHT FROM TOR TO DECK SHALL BE 2'-9" PLUS AN ALLOWANCE FOR WATERPROOF MEMBRANE, AND PROTECTION LAYER IF REQUIRED. FOR SLAB TRACKFORM, THE HEIGHT FROM TOR TO DECK SHALL BE 2'-6" PLUS AN ALLOWANCE FOR WATERPROOF MEMBRANE AND PROTECTION LAYER IF REQUIRED.

6. WHERE THE VERTICAL ALIGNMENT GRADE IS LESS THAN 0.5% THE UPPER SURFACE OF THE VIADUCT STRUCTURE SHALL BE PROFILED TO GIVE A MINIMUM LONGITUDINAL FALL OF 0.5%. TYPICALLY FOR A SPAN OF 120'-00" ON A 0% GRADE SECTION OF VIADUCT THIS COULD BE ACHIEVED BY MODIFYING THE CROSS SLOPE OF THE GIRDER LINEARLY BETWEEN 0.8% AT MID-SPAN TO 2% AT EACH END.

7. WHEN LATERAL SEPARATION BETWEEN THE CONVENTIONAL RAILROAD AND HST SYSTEM IS LESS THAN 102', A SITE SPECIFIC HAZARD ANALYSIS WILL BE CONDUCTED TO DETERMINE WHAT SPECIFIC COLLISION PROTECTION MEASURES MAY NEED TO BE IMPLEMENTED.

8. RIP-RAP PROTECTION IS REQUIRED FOR EMBANKMENTS WITHIN FEMA SPECIAL FLOOD HAZARD ZONES, IN ACCORDANCE WITH DESIGN CRITERIA.

9. HST ALIGNMENT CONTROL LINE IS DESIGNED AS THE CENTERLINE BETWEEN THE TWO MAINLINE TRACKS.

10. TRACK FORM USED IN TYPICAL SECTIONS IS INDICATIVE.

DIRECTION OF TRAFFIC

POINT OF MINIMUM VERTICAL CLEARANCE
ROAD CLOSURE (ROADWAYS)

1 LINE DATA

1 3 CURVE DATA (ALIGNMENTS)
CURVE DATA (STRUCTURES)

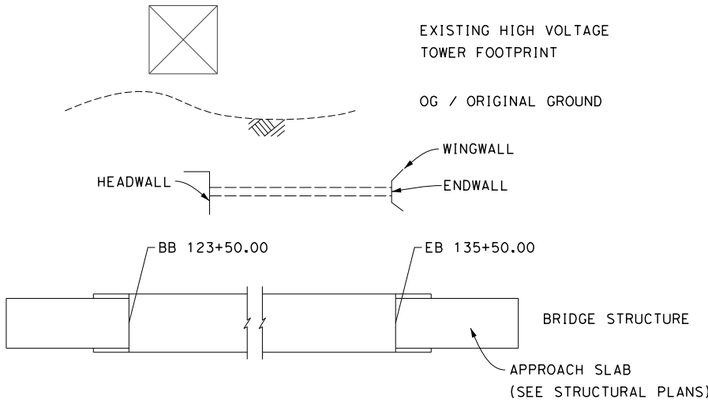


04/02/2014 - RFP No.: HSR 13-57

| REV | DATE | BY | CHK | APP | DESCRIPTION |
|---|---|---|---|---|---|

DESIGNED BY K. SEYMOUR
DRAWN BY P. TONKIN
CHECKED BY D. HUNT
IN CHARGE R. COFFIN
DATE 02/04/14

**RECORD SET 15% DESIGN SUBMISSION - NOT FOR CONSTRUCTION**

URS | HMM | ARUP
CALIFORNIA HIGH-SPEED TRAIN

CALIFORNIA HIGH-SPEED RAIL AUTHORITY

# CALIFORNIA HIGH-SPEED TRAIN PROJECT FRESNO TO BAKERSFIELD

GENERAL
ABBREVIATIONS AND LEGENDS
SHEET 2 OF 2

CONTRACT NO. HSR 06-0003
DRAWING NO. CB0011
SCALE NO SCALE
SHEET NO. 5 OF 5

Paul.Tonkin 1/27/2014 6:18:39 PM c:\pwworking\hmm\external\paul.tonkin01-arup.com\d0178203\FB-CB-0011.dgn

MONMOUTH

CONEJO

SUBSECTION M

E CONEJO AVE

SV2221

SV2222

SV2223

SV2224

SV2225

SV2226

EXISTING BNSF

COLE SLOUGH

KINGS RIVER

LATON

HANFORD

STATE ROUTE 198

STATE ROUTE 43

SUBSECTION K3 & K4

KANSAS AVE

EXISTING SJVR

LEGEND

EXISTING FREIGHT RAILROAD

PROPOSED CHST

4000 0 4000 8000

1"=4000'

04/02/2014 - RFP No.: HSR 13-57

| REV | DATE | BY | CHK | APP | DESCRIPTION |
|---|---|---|---|---|---|
| | | | | | |

DESIGNED BY M. FISHER

DRAWN BY N. HUTTON

CHECKED BY A. ARMSTRONG

IN CHARGE R. COFFIN

DATE 12/31/13

**RECORD SET 15% DESIGN SUBMISSION - NOT FOR CONSTRUCTION**

URS | HMM | ARUP

CALIFORNIA HIGH-SPEED TRAIN

CALIFORNIA HIGH-SPEED RAIL AUTHORITY

# CALIFORNIA HIGH-SPEED TRAIN PROJECT
## FRESNO TO BAKERSFIELD
HANFORD SUBSECTION
ALIGNMENT H
CONEJO VIADUCT
KEY MAP

CONTRACT NO. HSR 06-0003

DRAWING NO. SV2220

SCALE AS SHOWN

SHEET NO. 1 OF 8

frank.palermo 12/23/2013 2:30:27 PM c:\pwworking\hmm\external\frank.palermo01-arup.com\d0128411\FB-SV-2220-H.dgn

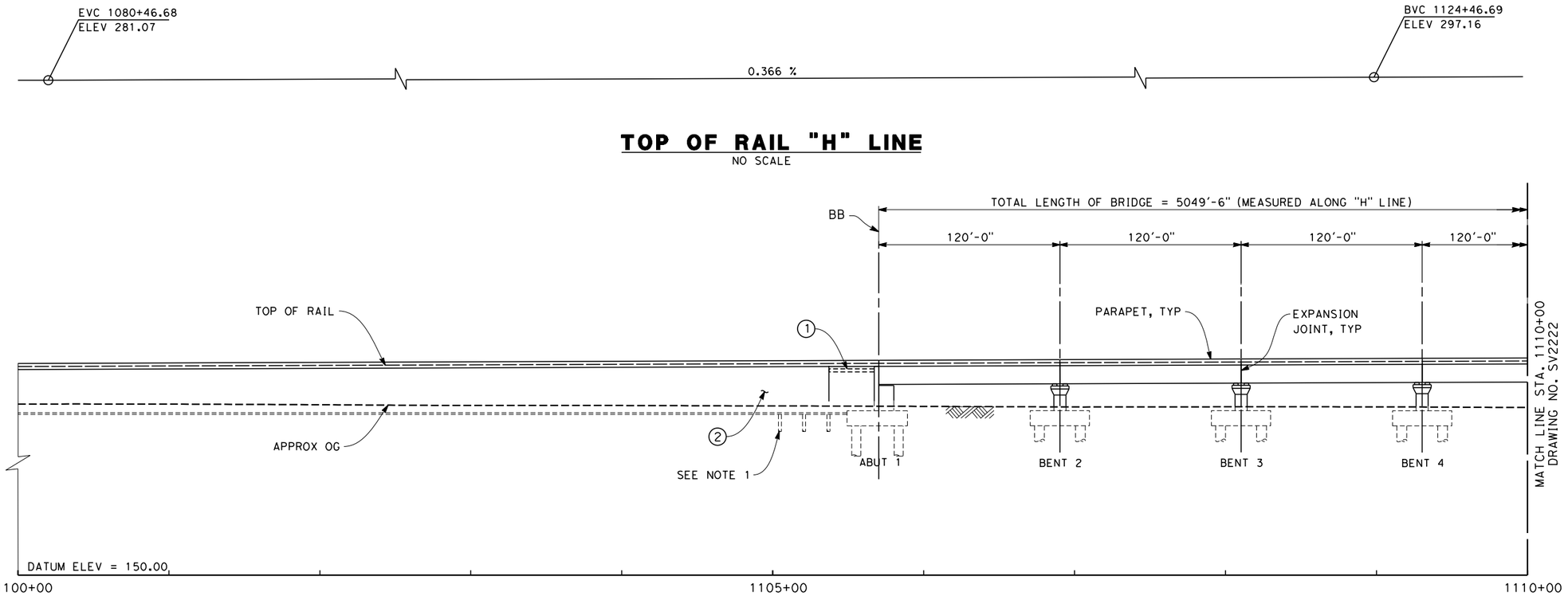


## TOP OF RAIL "H" LINE

NO SCALE

## ELEVATION

SCALE 1" = 40'

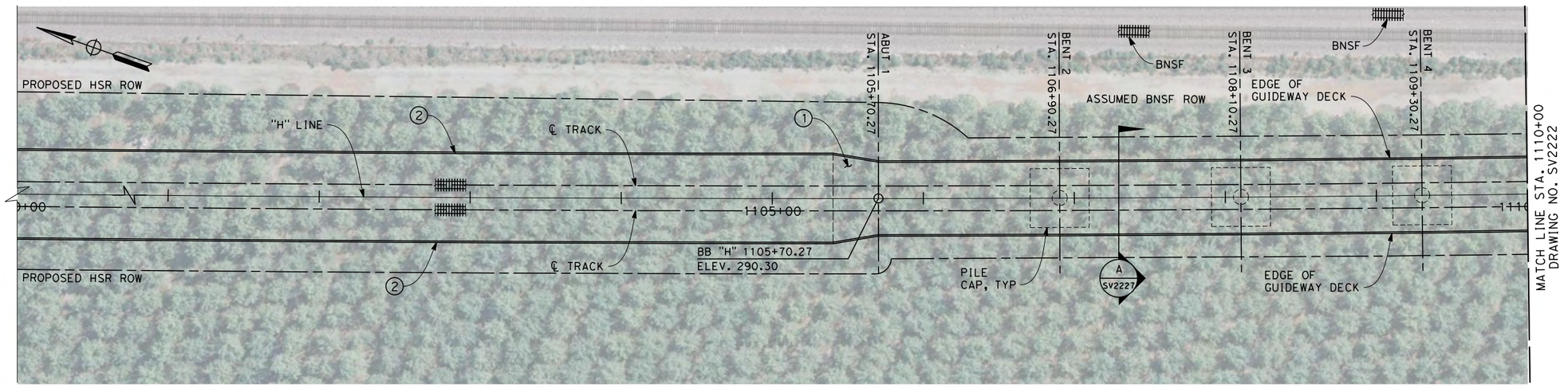


## PLAN

SCALE 1" = 40'

NOTES

1. NOT ALL PILES SHOWN
2. PILE LENGTH TO BE DETERMINED
3. SUPERSTRUCTURE CONSTRUCTION, UON
   SIMPLE SPANS - MSS OR FLPM
   CONTINUOUS SPANS - BCC - PRECAST IN-SITU
   STEEL TRUSS - INSITU, SLID OR LAUNCHED
   ELEVATED SLABS - PC BEAM AND INSITU SLAB
4. UTILITY LOCATIONS TO BE DETERMINED
5. ACCESS STAIRWAYS ARE PROVIDED AT SYSTEMS SITES (APPROX. 2.5 MILE INTERVALS). LADDER ACCESS TO VIADUCTS IS PROVIDED AT 2500 FT INTERVALS WITH ACCESS ROAD AND TURNING CIRCLE WHERE NECESSARY.

LEGEND:

(1) STRUCTURE APPROACH SLAB

(2) RETAINING WALL

* ESTIMATED 100-YEAR FLOOD ELEVATION, SEE "FRESNO TO BAKERSFIELD CORRIDOR HYDROLOGY, HYDRAULICS AND DRAINAGE 15% DRAFT REPORT".

40 0 40 80
1"=40'

04/02/2014 - RFP No.: HSR 13-57

| REV | DATE | BY | CHK | APP | DESCRIPTION |
|---|---|---|---|---|---|

DESIGNED BY Y. REN
DRAWN BY F. PALERMO
CHECKED BY A. ARMSTRONG
IN CHARGE R. COFFIN
DATE 12/31/13

RECORD SET 15% DESIGN SUBMISSION - NOT FOR CONSTRUCTION

URS | HMM | ARUP
CALIFORNIA HIGH-SPEED TRAIN

CALIFORNIA HIGH-SPEED RAIL AUTHORITY

# CALIFORNIA HIGH-SPEED TRAIN PROJECT
# FRESNO TO BAKERSFIELD
HANFORD SUBSECTION
ALIGNMENT H
CONEJO VIADUCT
PLAN AND ELEVATION

CONTRACT NO. HSR 06-0003
DRAWING NO. SV2221
SCALE AS SHOWN
SHEET NO. 2 OF 8

frank.palermo 12/23/2013 2:31:19 PM c:\pwworking\hmm\external\frank.palermo01-arup.com\d0128411\FB-SV-2221-H.dgn

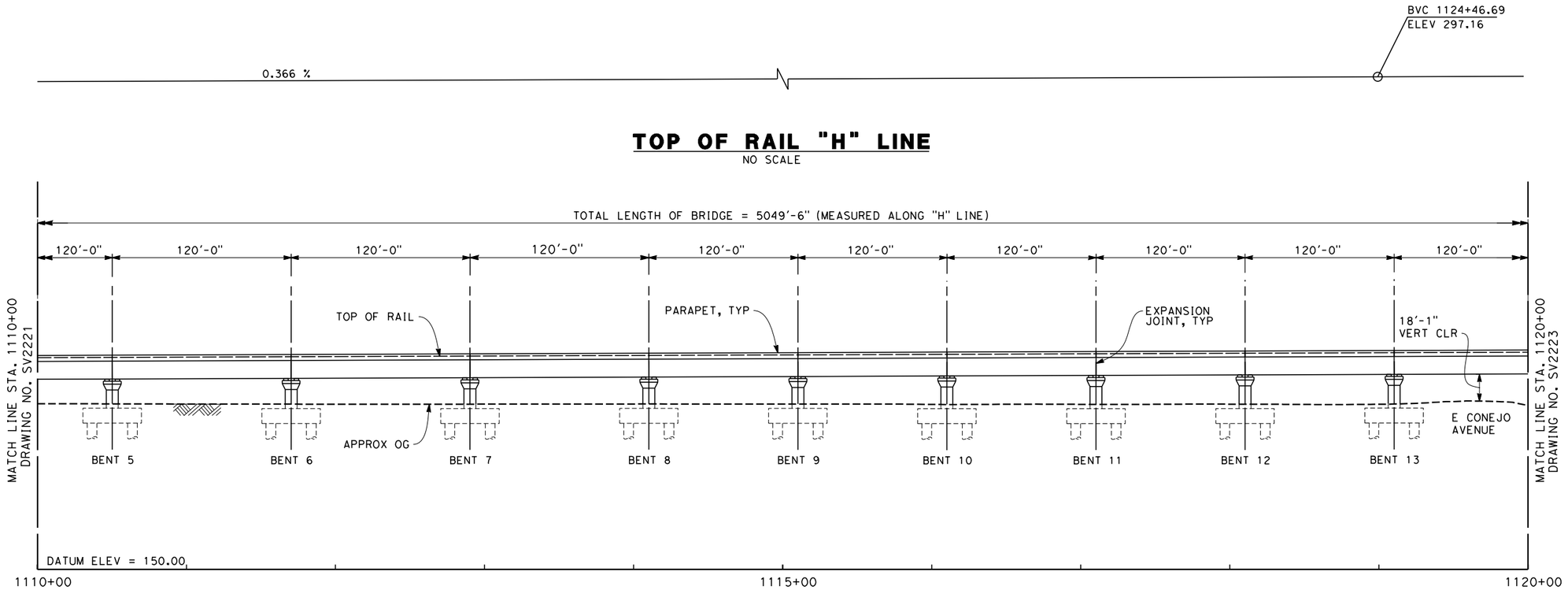


**TOP OF RAIL "H" LINE**
NO SCALE

**ELEVATION**
SCALE 1" = 40'

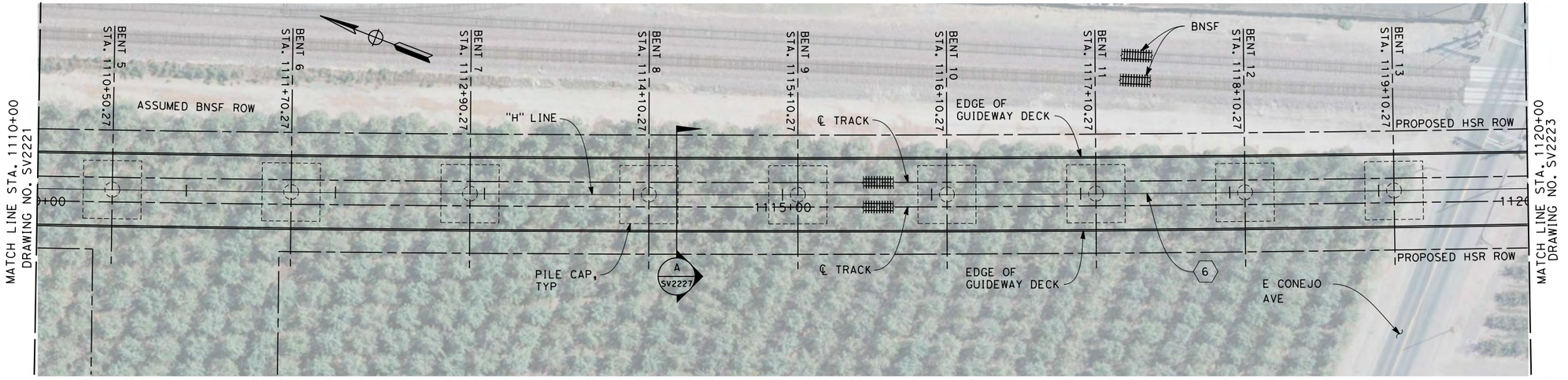


**PLAN**
SCALE 1" = 40'

NOTES
1. NOT ALL PILES SHOWN
2. PILE LENGTH TO BE DETERMINED
3. SUPERSTRUCTURE CONSTRUCTION, UON
   SIMPLE SPANS - MSS OR FLPM
   CONTINUOUS SPANS - BCC - PRECAST IN-SITU
   STEEL TRUSS - INSITU, SLID OR LAUNCHED
   ELEVATED SLABS - PC BEAM AND INSITU SLAB
4. UTILITY LOCATIONS TO BE DETERMINED
5. ACCESS STAIRWAYS ARE PROVIDED AT SYSTEMS SITES (APPROX. 2.5 MILE INTERVALS). LADDER ACCESS TO VIADUCTS IS PROVIDED AT 2500 FT INTERVALS WITH ACCESS ROAD AND TURNING CIRCLE WHERE NECESSARY.

LEGEND:
1. STRUCTURE APPROACH SLAB
2. RETAINING WALL
* ESTIMATED 100-YEAR FLOOD ELEVATION, SEE "FRESNO TO BAKERSFIELD CORRIDOR HYDROLOGY, HYDRAULICS AND DRAINAGE 15% DRAFT REPORT".

CURVE DATA
6
R= 29000
Δ= 37°42'29"
T= 9903
L= 19086

40 0 40 80
1"=40'

04/02/2014 - RFP No.: HSR 13-57

| REV | DATE | BY | CHK | APP | DESCRIPTION |
|---|---|---|---|---|---|

DESIGNED BY Y. REN
DRAWN BY F. PALERMO
CHECKED BY A. ARMSTRONG
IN CHARGE R. COFFIN
DATE 12/31/13

RECORD SET 15% DESIGN SUBMISSION - NOT FOR CONSTRUCTION

URS | HMM | ARUP
CALIFORNIA HIGH-SPEED TRAIN

CALIFORNIA HIGH-SPEED RAIL AUTHORITY

**CALIFORNIA HIGH-SPEED TRAIN PROJECT**
**FRESNO TO BAKERSFIELD**
HANFORD SUBSECTION
ALIGNMENT H
CONEJO VIADUCT
PLAN AND ELEVATION

CONTRACT NO. HSR 06-0003
DRAWING NO. SV2222
SCALE AS SHOWN
SHEET NO. 3 OF 8

frank.palermo 12/23/2013 2:31:56 PM c:\pwworking\hmm\external\frank.palermo01-arup.com\d0128411\FB-SV-2222-H.dgn

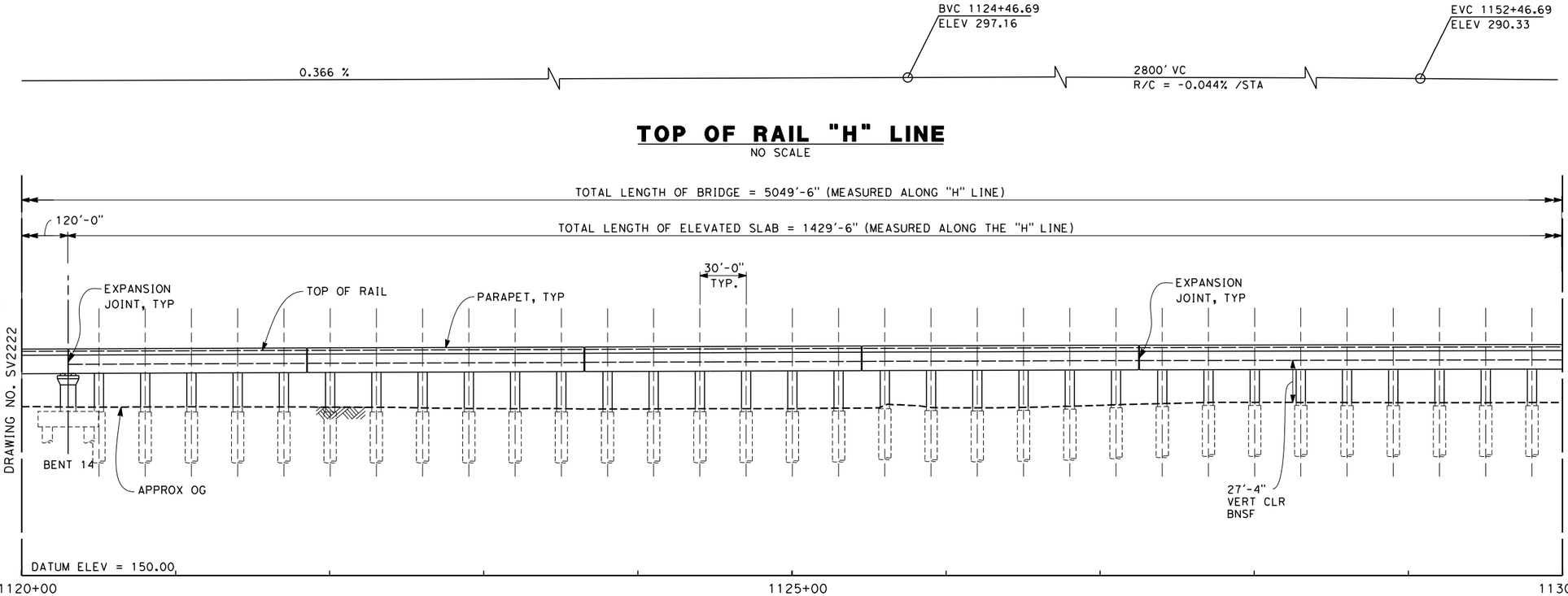


## TOP OF RAIL "H" LINE

NO SCALE

## ELEVATION

SCALE 1" = 40'

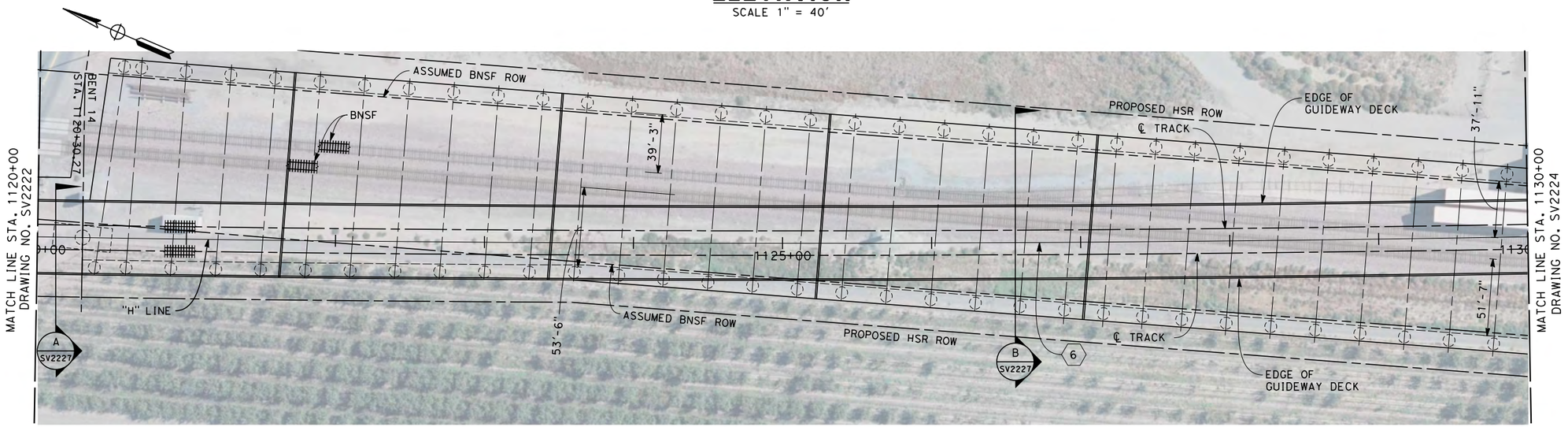


## PLAN

SCALE 1" = 40'

NOTES

1. NOT ALL PILES SHOWN
2. PILE LENGTH TO BE DETERMINED
3. SUPERSTRUCTURE CONSTRUCTION, UON
   SIMPLE SPANS - MSS OR FLPM
   CONTINUOUS SPANS - BCC - PRECAST IN-SITU
   STEEL TRUSS - INSITU, SLID OR LAUNCHED
   ELEVATED SLABS - PC BEAM AND INSITU SLAB
4. UTILITY LOCATIONS TO BE DETERMINED
5. ACCESS STAIRWAYS ARE PROVIDED AT SYSTEMS SITES (APPROX. 2.5 MILE INTERVALS). LADDER ACCESS TO VIADUCTS IS PROVIDED AT 2500 FT INTERVALS WITH ACCESS ROAD AND TURNING CIRCLE WHERE NECESSARY.

LEGEND:

(1) STRUCTURE APPROACH SLAB

(2) RETAINING WALL

* ESTIMATED 100-YEAR FLOOD ELEVATION, SEE "FRESNO TO BAKERSFIELD CORRIDOR HYDROLOGY, HYDRAULICS AND DRAINAGE 15% DRAFT REPORT".

CURVE DATA

(6)

R = 29000.00'
Δ = 37° 42' 29.3"
T = 9903.0'
L = 19085.8'

40 0 40 80
1"=40'

04/02/2014 - RFP No.: HSR 13-57

| REV | DATE | BY | CHK | APP | DESCRIPTION |
|---|---|---|---|---|---|

DESIGNED BY Y. REN
DRAWN BY F. PALERMO
CHECKED BY A. ARMSTRONG
IN CHARGE R. COFFIN
DATE 12/31/13

**RECORD SET 15% DESIGN SUBMISSION - NOT FOR CONSTRUCTION**

URS | HMM | ARUP
CALIFORNIA HIGH-SPEED TRAIN

CALIFORNIA HIGH-SPEED RAIL AUTHORITY

**CALIFORNIA HIGH-SPEED TRAIN PROJECT**
**FRESNO TO BAKERSFIELD**
HANFORD SUBSECTION
ALIGNMENT H
CONEJO VIADUCT
PLAN AND ELEVATION

CONTRACT NO. HSR 06-0003
DRAWING NO. SV2223
SCALE AS SHOWN
SHEET NO. 4 OF 8

frank.palermo 12/23/2013 2:32:29 PM c:\pwworking\hmm\external\frank.palermo01-arup.com\d0128411\FB-SV-2223-H.dgn

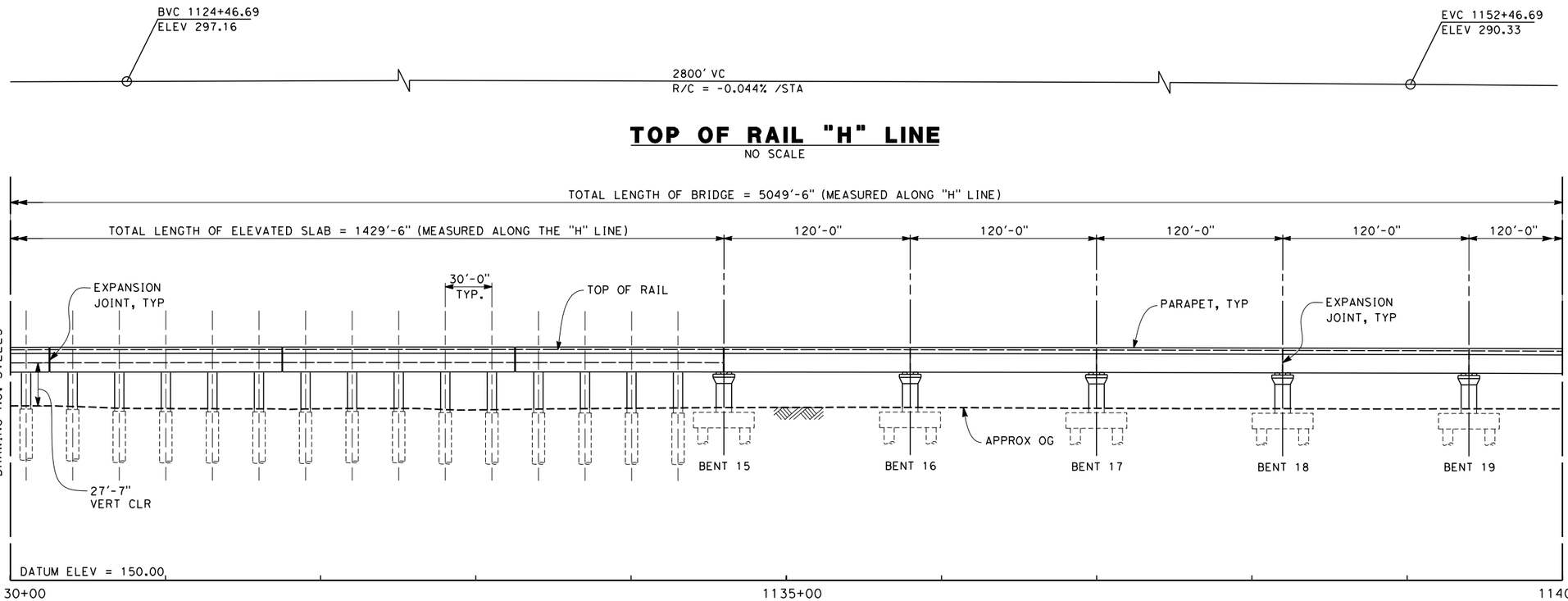


## TOP OF RAIL "H" LINE

NO SCALE

## ELEVATION

SCALE 1" = 40'

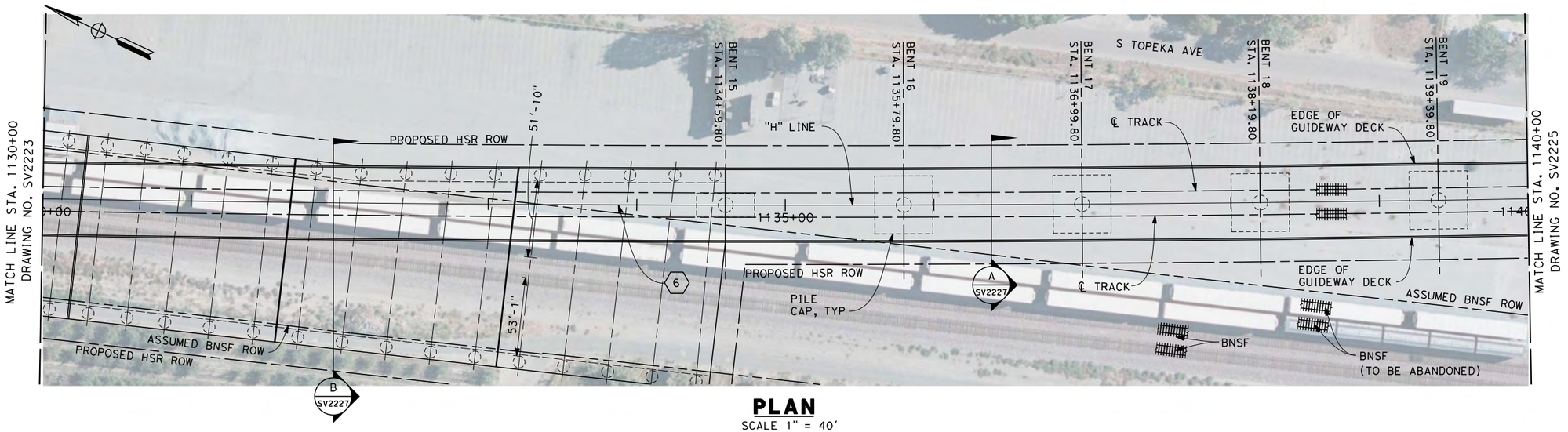


## PLAN

SCALE 1" = 40'

### NOTES

1. NOT ALL PILES SHOWN
2. PILE LENGTH TO BE DETERMINED
3. SUPERSTRUCTURE CONSTRUCTION, UON
   SIMPLE SPANS - MSS OR FLPM
   CONTINUOUS SPANS - BCC - PRECAST IN-SITU
   STEEL TRUSS - INSITU, SLID OR LAUNCHED
   ELEVATED SLABS - PC BEAM AND INSITU SLAB
4. UTILITY LOCATIONS TO BE DETERMINED
5. ACCESS STAIRWAYS ARE PROVIDED AT SYSTEMS SITES (APPROX. 2.5 MILE INTERVALS). LADDER ACCESS TO VIADUCTS IS PROVIDED AT 2500 FT INTERVALS WITH ACCESS ROAD AND TURNING CIRCLE WHERE NECESSARY.

LEGEND:

(1) STRUCTURE APPROACH SLAB

(2) RETAINING WALL

* ESTIMATED 100-YEAR FLOOD ELEVATION, SEE "FRESNO TO BAKERSFIELD CORRIDOR HYDROLOGY, HYDRAULICS AND DRAINAGE 15% DRAFT REPORT".

CURVE DATA

(6)

R = 29000.00'
Δ = 37° 42' 29.3"
T = 9903.0'
L = 19085.8'

40 0 40 80
1"=40'

04/02/2014 - RFP No.: HSR 13-57

| REV | DATE | BY | CHK | APP | DESCRIPTION |
|---|---|---|---|---|---|

DESIGNED BY Y. REN
DRAWN BY F. PALERMO
CHECKED BY A. ARMSTRONG
IN CHARGE R. COFFIN
DATE 12/31/13

**RECORD SET 15% DESIGN SUBMISSION - NOT FOR CONSTRUCTION**

URS | HMM | ARUP
CALIFORNIA HIGH-SPEED TRAIN

CALIFORNIA HIGH-SPEED RAIL AUTHORITY

**CALIFORNIA HIGH-SPEED TRAIN PROJECT**
**FRESNO TO BAKERSFIELD**
HANFORD SUBSECTION
ALIGNMENT H
CONEJO VIADUCT
PLAN AND ELEVATION

CONTRACT NO. HSR 06-0003
DRAWING NO. SV2224
SCALE AS SHOWN
SHEET NO. 5 OF 8

frank.palermo 12/23/2013 2:32:55 PM c:\pwworking\hmm\external\frank.palermo01-arup.com\d0128411\FB-SV-2224-H.dgn

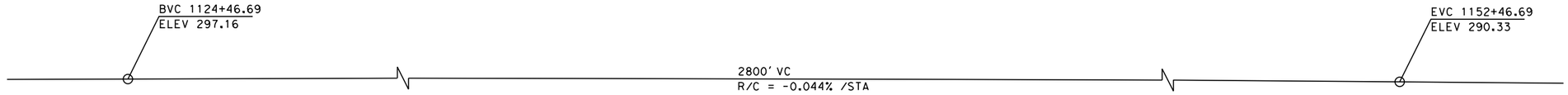


## TOP OF RAIL "H" LINE

NO SCALE

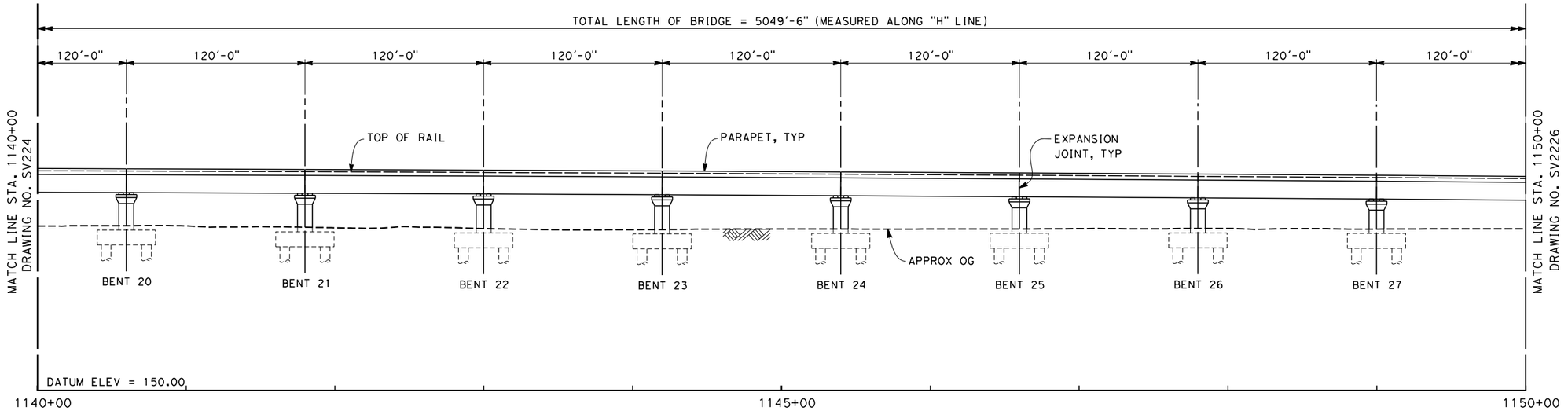


## ELEVATION

SCALE 1" = 40'

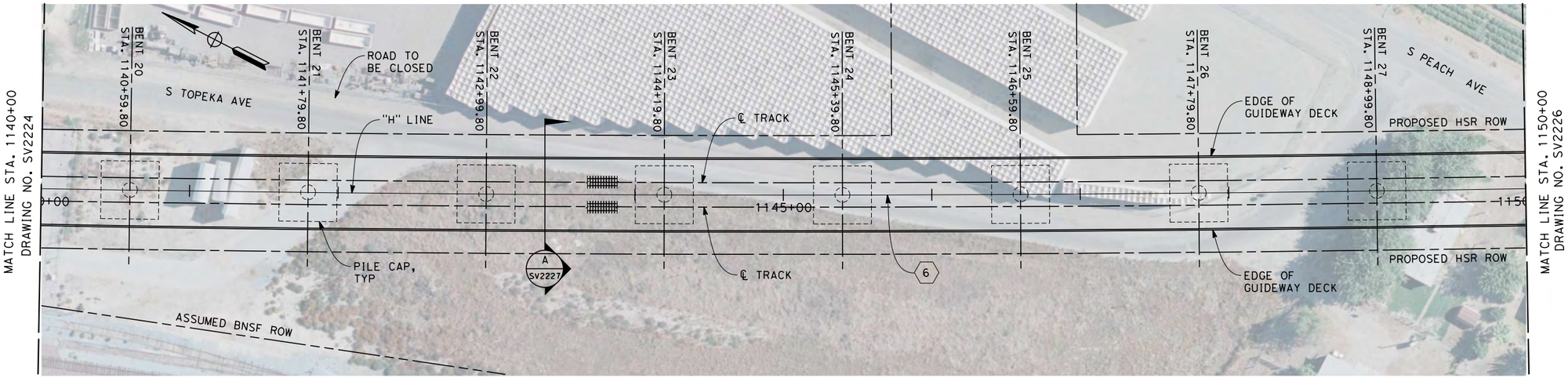


## PLAN

SCALE 1" = 40'

### NOTES

1. NOT ALL PILES SHOWN
2. PILE LENGTH TO BE DETERMINED
3. SUPERSTRUCTURE CONSTRUCTION, UON
   SIMPLE SPANS - MSS OR FLPM
   CONTINUOUS SPANS - BCC - PRECAST IN-SITU
   STEEL TRUSS - INSITU, SLID OR LAUNCHED
   ELEVATED SLABS - PC BEAM AND INSITU SLAB
4. UTILITY LOCATIONS TO BE DETERMINED
5. ACCESS STAIRWAYS ARE PROVIDED AT SYSTEMS SITES (APPROX. 2.5 MILE INTERVALS). LADDER ACCESS TO VIADUCTS IS PROVIDED AT 2500 FT INTERVALS WITH ACCESS ROAD AND TURNING CIRCLE WHERE NECESSARY.

LEGEND:

(1) STRUCTURE APPROACH SLAB

(2) RETAINING WALL

* ESTIMATED 100-YEAR FLOOD ELEVATION, SEE "FRESNO TO BAKERSFIELD CORRIDOR HYDROLOGY, HYDRAULICS AND DRAINAGE 15% DRAFT REPORT".

CURVE DATA

(6)

R = 29000.00'
Δ = 37° 42' 29.3"
T = 9903.0'
L = 19085.8'

40 0 40 80
1"=40'

04/02/2014 - RFP No.: HSR 13-57

| REV | DATE | BY | CHK | APP | DESCRIPTION |
|---|---|---|---|---|---|

DESIGNED BY Y. REN
DRAWN BY F. PALERMO
CHECKED BY A. ARMSTRONG
IN CHARGE R. COFFIN
DATE 12/31/13

**RECORD SET 15% DESIGN SUBMISSION - NOT FOR CONSTRUCTION**

URS | HMM | ARUP
CALIFORNIA HIGH-SPEED TRAIN

CALIFORNIA
HIGH-SPEED RAIL AUTHORITY

**CALIFORNIA HIGH-SPEED TRAIN PROJECT**
**FRESNO TO BAKERSFIELD**
HANFORD SUBSECTION
ALIGNMENT H
CONEJO VIADUCT
PLAN AND ELEVATION

CONTRACT NO. HSR 06-0003
DRAWING NO. SV2225
SCALE AS SHOWN
SHEET NO. 6 OF 8

frank.palermo 12/23/2013 2:33:24 PM c:\pwworking\hmm\external\frank.palermo01-arup.com\d0128411\FB-SV-2225-H.dgn

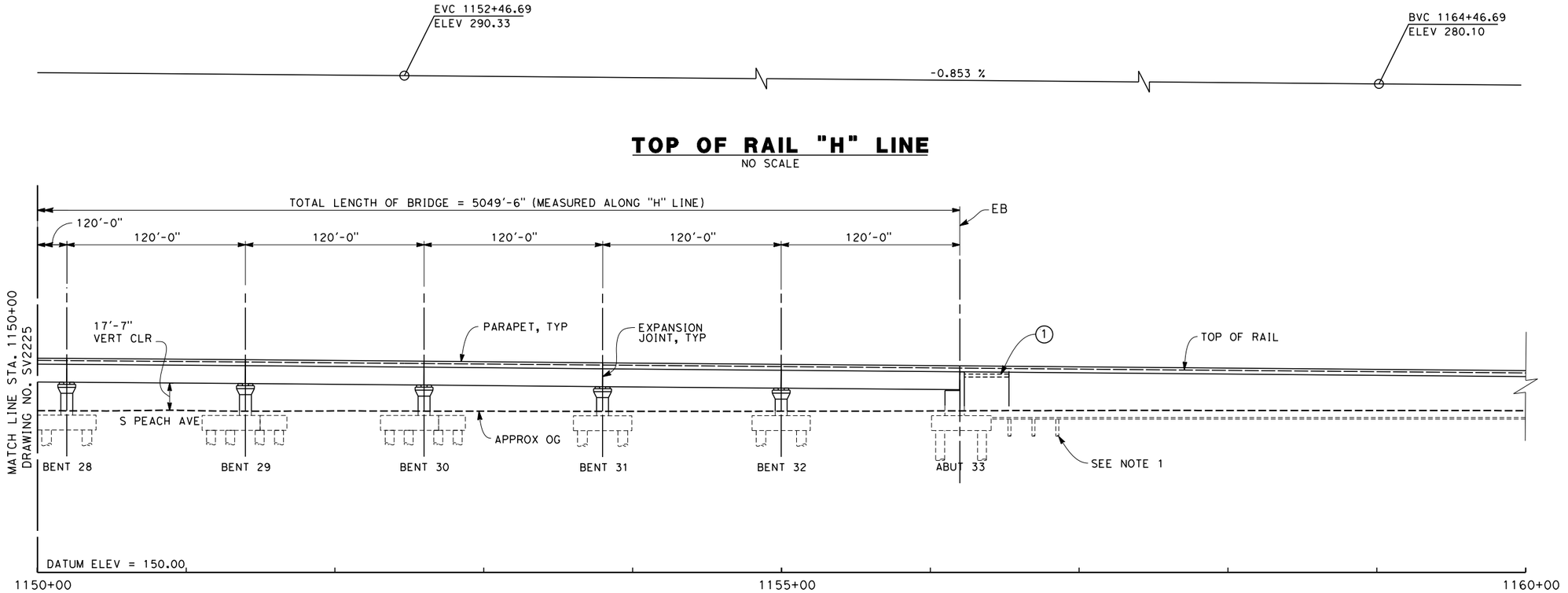


## TOP OF RAIL "H" LINE
NO SCALE

## ELEVATION
SCALE 1" = 40'

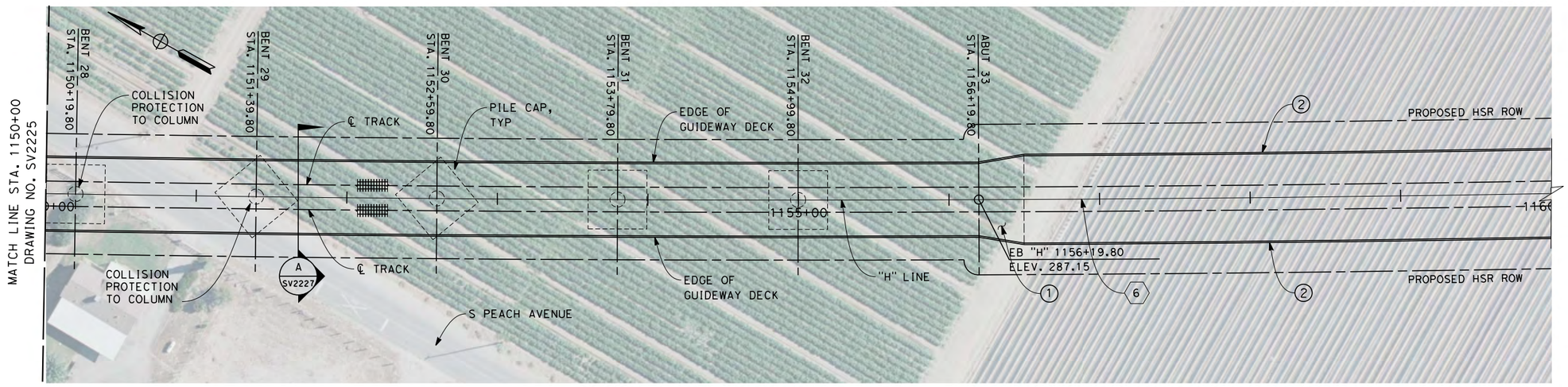


## PLAN
SCALE 1" = 40'

### NOTES
1. NOT ALL PILES SHOWN
2. PILE LENGTH TO BE DETERMINED
3. SUPERSTRUCTURE CONSTRUCTION, UON
   SIMPLE SPANS - MSS OR FLPM
   CONTINUOUS SPANS - BCC - PRECAST IN-SITU
   STEEL TRUSS - INSITU, SLID OR LAUNCHED
   ELEVATED SLABS - PC BEAM AND INSITU SLAB
4. UTILITY LOCATIONS TO BE DETERMINED
5. ACCESS STAIRWAYS ARE PROVIDED AT SYSTEMS SITES (APPROX. 2.5 MILE INTERVALS). LADDER ACCESS TO VIADUCTS IS PROVIDED AT 2500 FT INTERVALS WITH ACCESS ROAD AND TURNING CIRCLE WHERE NECESSARY.

LEGEND:

(1) STRUCTURE APPROACH SLAB

(2) RETAINING WALL

* ESTIMATED 100-YEAR FLOOD ELEVATION, SEE "FRESNO TO BAKERSFIELD CORRIDOR HYDROLOGY, HYDRAULICS AND DRAINAGE 15% DRAFT REPORT".

CURVE DATA

(6)

R = 29000.00'
Δ = 37° 42' 29.3"
T = 9903.0'
L = 19085.8'

40 0 40 80
1"=40'

04/02/2014 - RFP No.: HSR 13-57

| REV | DATE | BY | CHK | APP | DESCRIPTION |
|---|---|---|---|---|---|

DESIGNED BY Y. REN
DRAWN BY F. PALERMO
CHECKED BY A. ARMSTRONG
IN CHARGE R. COFFIN
DATE 12/31/13

**RECORD SET 15% DESIGN SUBMISSION - NOT FOR CONSTRUCTION**

URS | HMM | ARUP
CALIFORNIA HIGH-SPEED TRAIN

CALIFORNIA
HIGH-SPEED RAIL AUTHORITY

**CALIFORNIA HIGH-SPEED TRAIN PROJECT**
**FRESNO TO BAKERSFIELD**
HANFORD SUBSECTION
ALIGNMENT H
CONEJO VIADUCT
PLAN AND ELEVATION

CONTRACT NO. HSR 06-0003
DRAWING NO. SV2226
SCALE AS SHOWN
SHEET NO. 7 OF 8

frank.palermo 12/23/2013 2:34:16 PM c:\pwworking\hmm\external\frank.palermo01-arup.com\d0128411\FB-SV-2226-H.dgn

| COLUMN DIAMETERS | |
|---|---|
| COLUMN HEIGHT | DIAMETER |
| 0-20 | 8 FT |
| 20-40 | 10 FT |
| 40-50 | 12 FT |
| 50-60 | 15 FT |
| 60-80 | 20 FT |
| 80-100 | 25 FT |

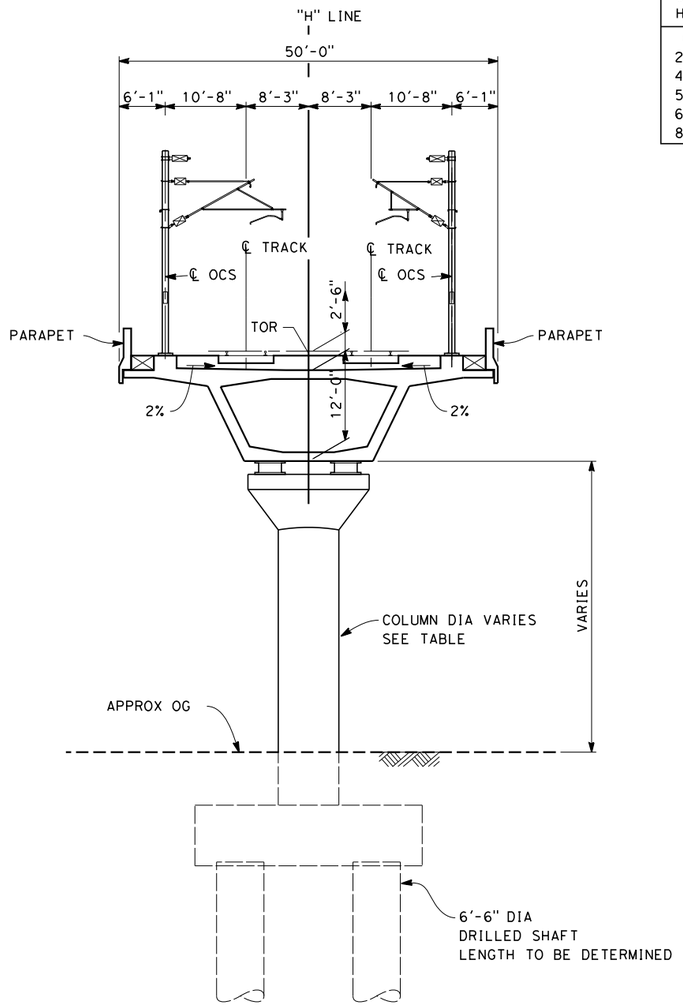


## SECTION A

SCALE: 1" = 10'

STA 1105+70 THROUGH 1123+80
STA 1133+40 THROUGH 1156+20

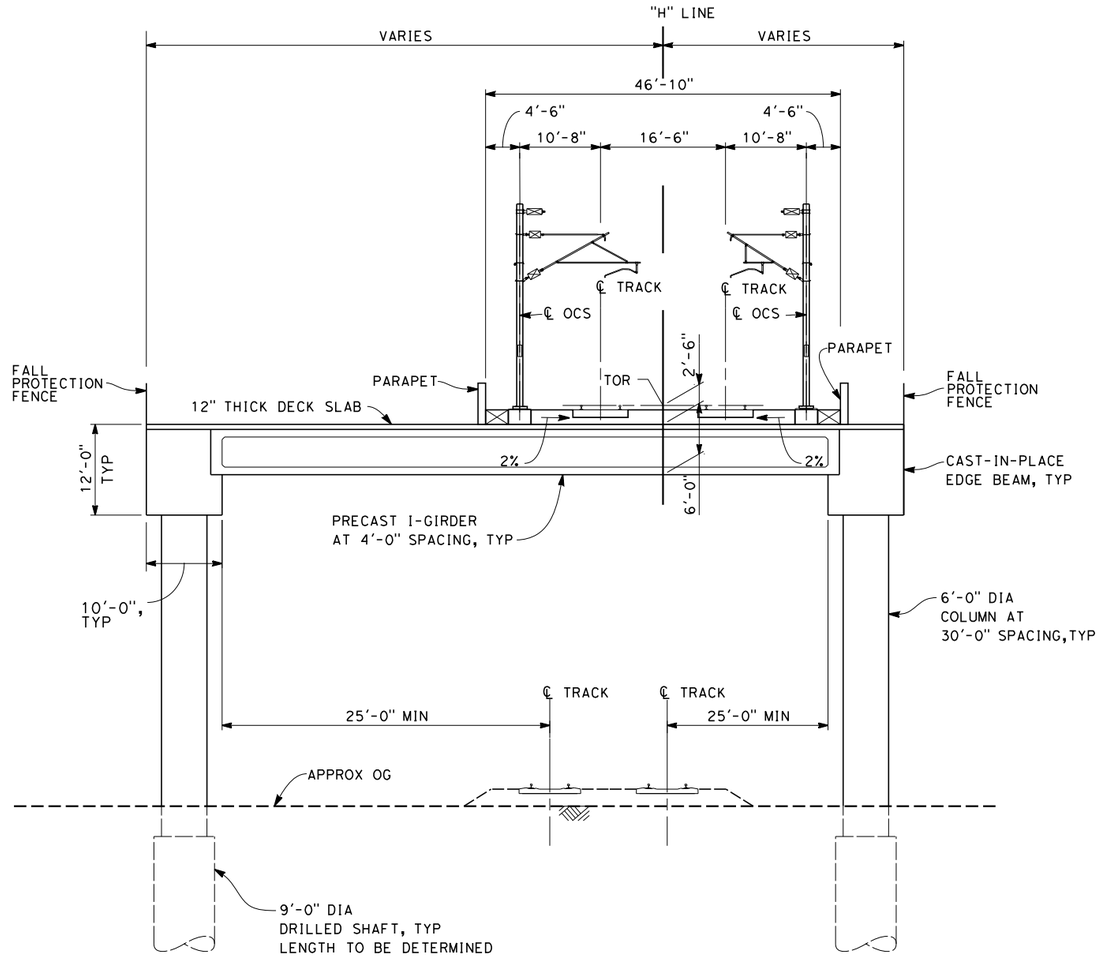


## SECTION B

SCALE: 1" = 10'

STA 1123+80 THROUGH 1133+40

10 0 10 20
1"-10'

04/02/2014 - RFP No.: HSR 13-57

| REV | DATE | BY | CHK | APP | DESCRIPTION |
|---|---|---|---|---|---|

DESIGNED BY M. FISHER
DRAWN BY F. PALERMO
CHECKED BY A. ARMSTRONG
IN CHARGE R. COFFIN
DATE 12/31/13

**RECORD SET 15% DESIGN SUBMISSION - NOT FOR CONSTRUCTION**

URS | HMM | ARUP
CALIFORNIA HIGH-SPEED TRAIN

CALIFORNIA
HIGH-SPEED RAIL AUTHORITY

**CALIFORNIA HIGH-SPEED TRAIN PROJECT**
**FRESNO TO BAKERSFIELD**
HANFORD SUBSECTION
ALIGNMENT H
CONEJO VIADUCT
TYPICAL SECTIONS

CONTRACT NO. HSR 06-0003
DRAWING NO. SV2227
SCALE AS SHOWN
SHEET NO. 8 OF 8

frank.palermo 12/23/2013 2:34:51 PM c:\pwworking\hmm\external\frank.palermo01-arup.com\d0128411\FB-SV-2227-H.dgn

| REV | DATE | BY | CHK | APP | DESCRIPTION |
|---|---|---|---|---|---|
| | | | | | |

DESIGNED BY M. FISHER
DRAWN BY E. SUDHAUSEN
CHECKED BY A. ARMSTRONG
IN CHARGE R. COFFIN
DATE 12/31/13

**RECORD SET 15% DESIGN SUBMISSION - NOT FOR CONSTRUCTION**

URS | HMM | ARUP
CALIFORNIA HIGH-SPEED TRAIN

CALIFORNIA
HIGH-SPEED RAIL AUTHORITY

# CALIFORNIA HIGH-SPEED TRAIN PROJECT
# FRESNO TO BAKERSFIELD

HANFORD SUBSECTION
ALIGNMENT H
KINGS RIVER VIADUCT
KEY MAP

CONTRACT NO. HSR 06-0003
DRAWING NO. SV2258
SCALE AS SHOWN
SHEET NO. 1 OF 18

04/02/2014 - RFP No.: HSR 13-57

frank.palermo 12/23/2013 2:37:29 PM c:\pwworking\hmm\external\frank.palermo01-arup.com\d0128411\FB-SV-2258-H.dgn

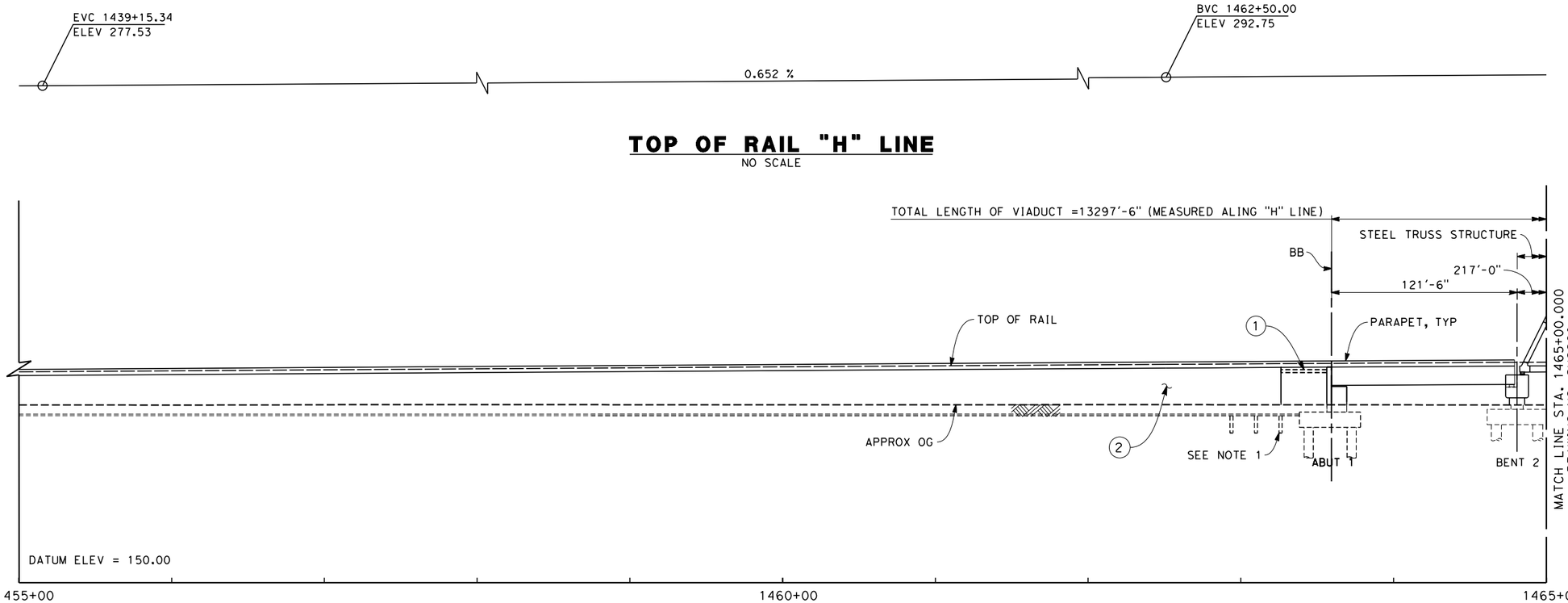


## TOP OF RAIL "H" LINE

NO SCALE

## ELEVATION

SCALE 1" = 40'

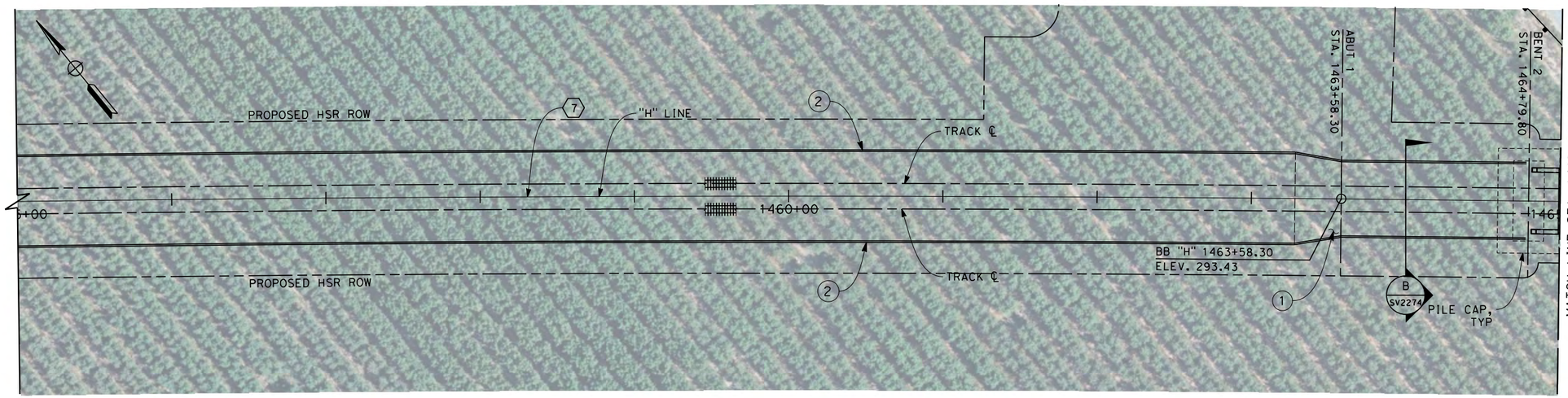


## PLAN

SCALE 1" = 40'

### NOTES

1. NOT ALL PILES SHOWN
2. PILE LENGTH TO BE DETERMINED
3. SUPERSTRUCTURE CONSTRUCTION, UON
   SIMPLE SPANS - MSS OR FLPM
   CONTINUOUS SPANS - BCC - PRECAST IN-SITU
   STEEL TRUSS - INSITU, SLID OR LAUNCHED
   ELEVATED SLABS - PC BEAM AND INSITU SLAB
4. UTILITY LOCATIONS TO BE DETERMINED
5. ACCESS STAIRWAYS ARE PROVIDED AT SYSTEMS SITES (APPROX. 2.5 MILE INTERVALS). LADDER ACCESS TO VIADUCTS IS PROVIDED AT 2500 FT INTERVALS WITH ACCESS ROAD AND TURNING CIRCLE WHERE NECESSARY.

LEGEND:

(1) STRUCTURE APPROACH SLAB

(2) RETAINING WALL

* ESTIMATED 100-YEAR FLOOD ELEVATION, SEE "FRESNO TO BAKERSFIELD CORRIDOR HYDROLOGY, HYDRAULICS AND DRAINAGE 15% DRAFT REPORT".

CURVE DATA

(7)

R = 36500.00'
Δ = 58° 05' 38.8"
T = 20271.5'
L = 37008.6'

40 0 40 80
1"=40'

04/02/2014 - RFP No.: HSR 13-57

| REV | DATE | BY | CHK | APP | DESCRIPTION |
|---|---|---|---|---|---|

DESIGNED BY M. FISHER
DRAWN BY F. PALERMO
CHECKED BY A. ARMSTRONG
IN CHARGE R. COFFIN
DATE 12/31/13

RECORD SET 15% DESIGN SUBMISSION - NOT FOR CONSTRUCTION

URS | HMM | ARUP
CALIFORNIA HIGH-SPEED TRAIN

CALIFORNIA HIGH-SPEED RAIL AUTHORITY

**CALIFORNIA HIGH-SPEED TRAIN PROJECT**
**FRESNO TO BAKERSFIELD**
HANFORD SUBSECTION
ALIGNMENT H
KINGS RIVER VIADUCT
PLAN AND ELEVATION

CONTRACT NO. HSR 06-0003
DRAWING NO. SV2259
SCALE AS SHOWN
SHEET NO. 2 OF 18

frank.palermo 12/23/2013 2:38:21 PM c:\pwworking\hmm\external\frank.palermo01-arup.com\d0128411\FB-SV-2259-H.dgn

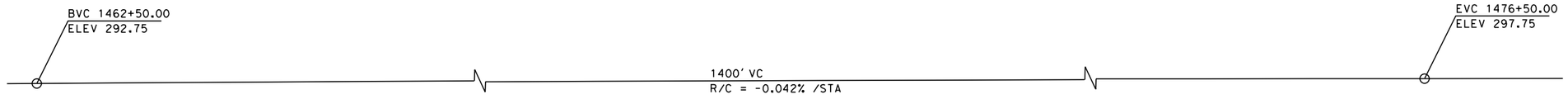


## TOP OF RAIL "H" LINE

NO SCALE

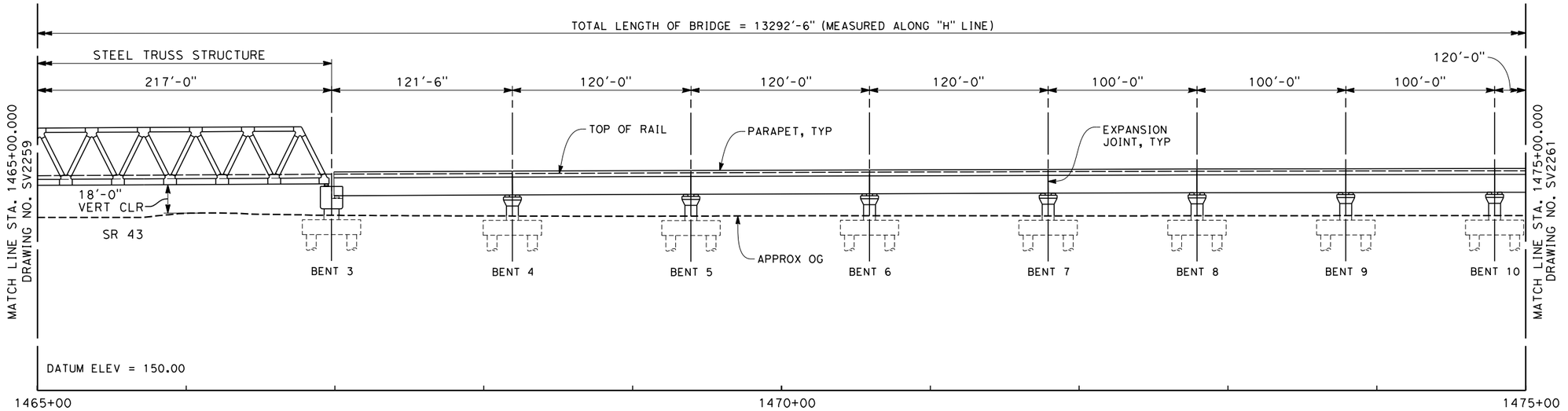


## ELEVATION

SCALE 1" = 40'

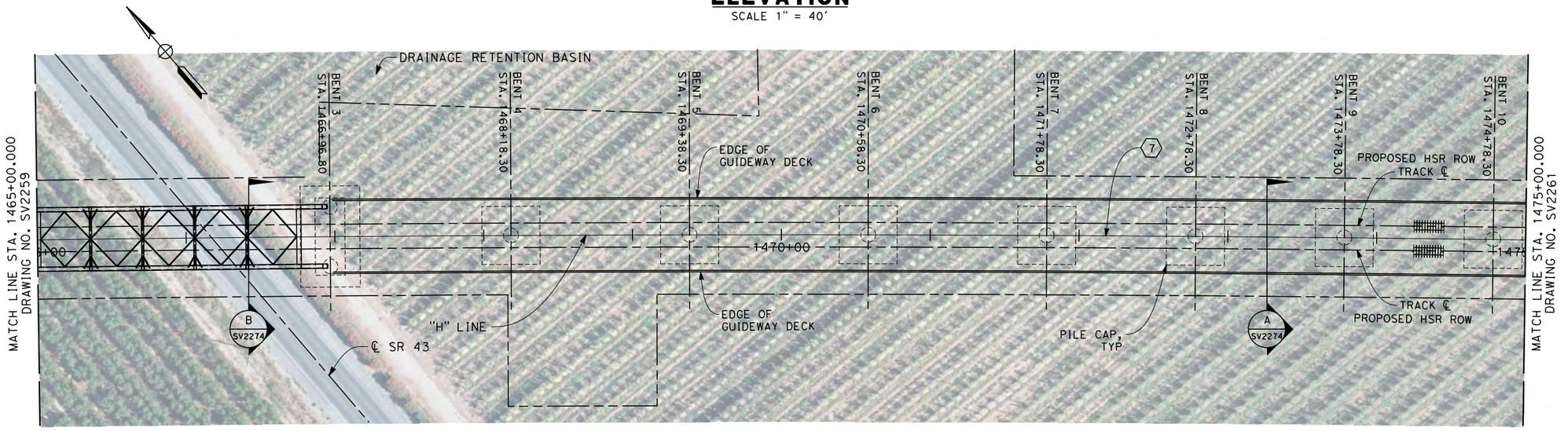


## PLAN

SCALE 1" = 40'

NOTES

1. NOT ALL PILES SHOWN
2. PILE LENGTH TO BE DETERMINED
3. SUPERSTRUCTURE CONSTRUCTION, UON
   SIMPLE SPANS - MSS OR FLPM
   CONTINUOUS SPANS - BCC - PRECAST IN-SITU
   STEEL TRUSS - INSITU, SLID OR LAUNCHED
   ELEVATED SLABS - PC BEAM AND INSITU SLAB
4. UTILITY LOCATIONS TO BE DETERMINED
5. ACCESS STAIRWAYS ARE PROVIDED AT SYSTEMS SITES (APPROX. 2.5 MILE INTERVALS). LADDER ACCESS TO VIADUCTS IS PROVIDED AT 2500 FT INTERVALS WITH ACCESS ROAD AND TURNING CIRCLE WHERE NECESSARY.

LEGEND:

(1) STRUCTURE APPROACH SLAB

(2) RETAINING WALL

* ESTIMATED 100-YEAR FLOOD ELEVATION, SEE "FRESNO TO BAKERSFIELD CORRIDOR HYDROLOGY, HYDRAULICS AND DRAINAGE 15% DRAFT REPORT".

CURVE DATA

(7)

R = 36500.00'
Δ = 58° 05' 38.8"
T = 20271.5'
L = 37008.6'

40 0 40 80
1"=40'

04/02/2014 - RFP No.: HSR 13-57

| REV | DATE | BY | CHK | APP | DESCRIPTION |
|---|---|---|---|---|---|

DESIGNED BY M. FISHER
DRAWN BY F. PALERMO
CHECKED BY A. ARMSTRONG
IN CHARGE R. COFFIN
DATE 12/31/13

RECORD SET 15% DESIGN SUBMISSION - NOT FOR CONSTRUCTION

URS | HMM | ARUP
California High-Speed Train

CALIFORNIA HIGH-SPEED RAIL AUTHORITY

**CALIFORNIA HIGH-SPEED TRAIN PROJECT**
**FRESNO TO BAKERSFIELD**
HANFORD SUBSECTION
ALIGNMENT H
KINGS RIVER VIADUCT
PLAN AND ELEVATION

CONTRACT NO. HSR 06-0003
DRAWING NO. SV2260
SCALE AS SHOWN
SHEET NO. 3 OF 18

frank.palermo 12/23/2013 2:38:50 PM c:\pwworking\hmm\external\frank.palermo01-arup.com\d0128411\FB-SV-2260-H.dgn

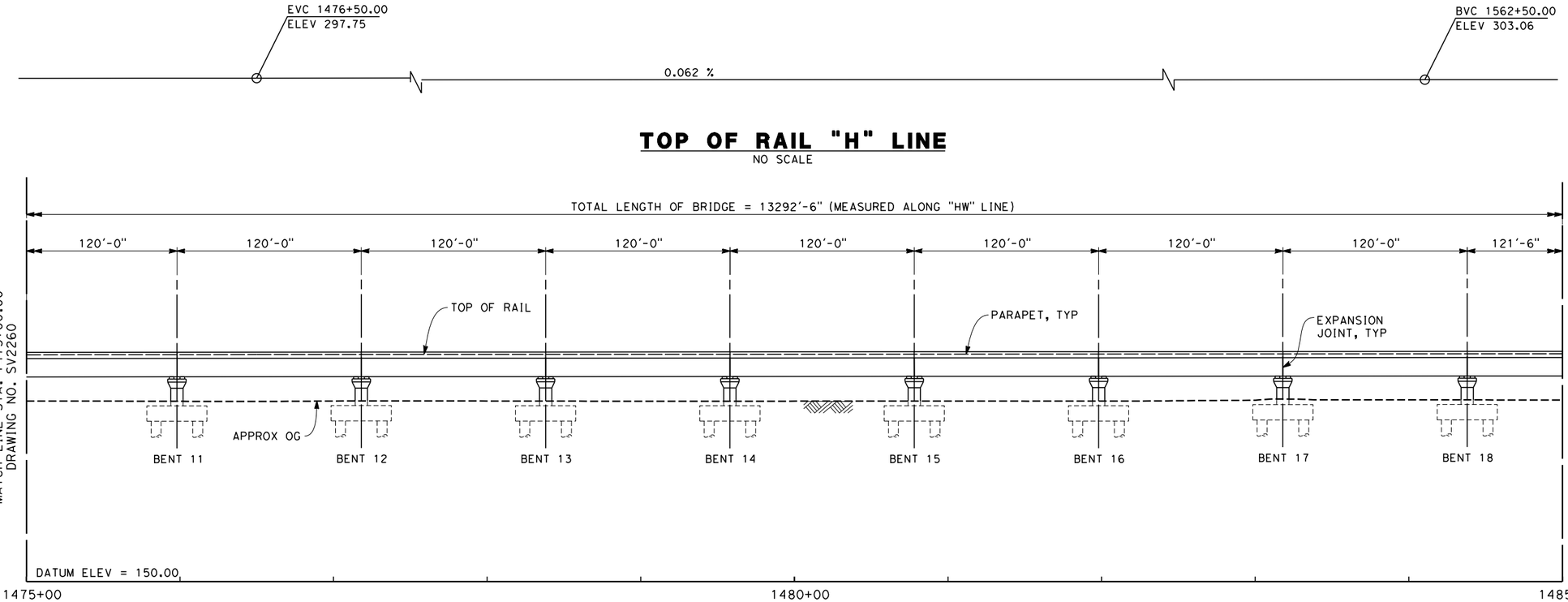


## TOP OF RAIL "H" LINE

NO SCALE

## ELEVATION

SCALE 1" = 40'

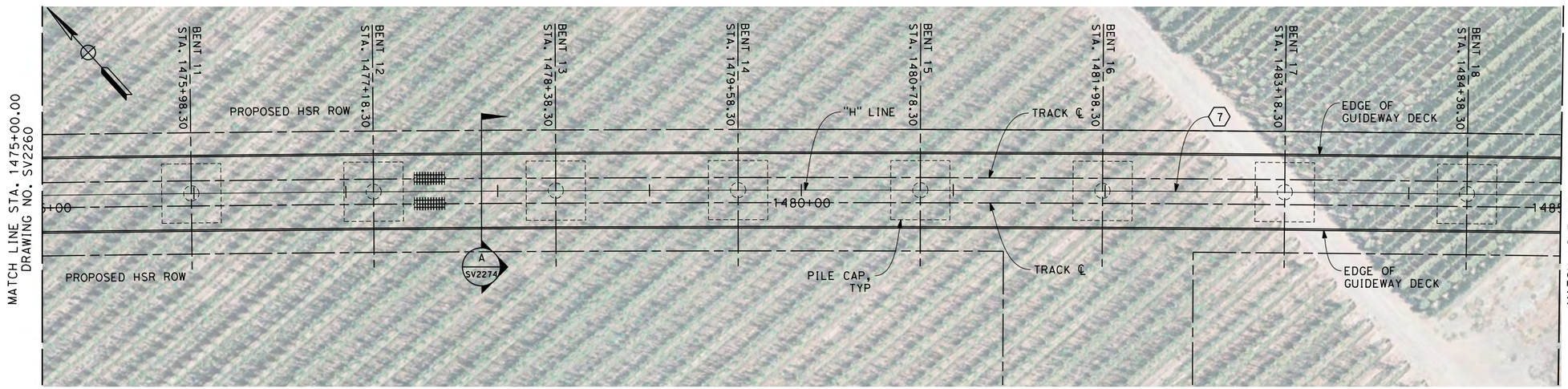


## PLAN

SCALE 1" = 40'

NOTES

1. NOT ALL PILES SHOWN
2. PILE LENGTH TO BE DETERMINED
3. SUPERSTRUCTURE CONSTRUCTION, UON
   SIMPLE SPANS - MSS OR FLPM
   CONTINUOUS SPANS - BCC - PRECAST IN-SITU
   STEEL TRUSS - INSITU, SLID OR LAUNCHED
   ELEVATED SLABS - PC BEAM AND INSITU SLAB
4. UTILITY LOCATIONS TO BE DETERMINED
5. ACCESS STAIRWAYS ARE PROVIDED AT SYSTEMS SITES (APPROX. 2.5 MILE INTERVALS). LADDER ACCESS TO VIADUCTS IS PROVIDED AT 2500 FT INTERVALS WITH ACCESS ROAD AND TURNING CIRCLE WHERE NECESSARY.

LEGEND:

(1) STRUCTURE APPROACH SLAB

(2) RETAINING WALL

* ESTIMATED 100-YEAR FLOOD ELEVATION, SEE "FRESNO TO BAKERSFIELD CORRIDOR HYDROLOGY, HYDRAULICS AND DRAINAGE 15% DRAFT REPORT".

CURVE DATA

(7)

R = 36500.00'
Δ = 58° 05' 38.8"
T = 20271.5'
L = 37008.6'

40 0 40 80
1"=40'

04/02/2014 - RFP No.: HSR 13-57

| REV | DATE | BY | CHK | APP | DESCRIPTION |
|---|---|---|---|---|---|

DESIGNED BY M. FISHER
DRAWN BY F. PALERMO
CHECKED BY A. ARMSTRONG
IN CHARGE R. COFFIN
DATE 12/31/13

**RECORD SET 15% DESIGN SUBMISSION - NOT FOR CONSTRUCTION**

URS | HMM | ARUP
CALIFORNIA HIGH-SPEED TRAIN

CALIFORNIA HIGH-SPEED RAIL AUTHORITY

**CALIFORNIA HIGH-SPEED TRAIN PROJECT**
**FRESNO TO BAKERSFIELD**
HANFORD SUBSECTION
ALIGNMENT H
KINGS RIVER VIADUCT
PLAN AND ELEVATION

CONTRACT NO. HSR 06-0003
DRAWING NO. SV2261
SCALE AS SHOWN
SHEET NO. 4 OF 18

frank.palermo 12/23/2013 2:39:03 PM c:\pwworking\hmm\external\frank.palermo01-arup.com\d0128411\FB-SV-2261-H.dgn

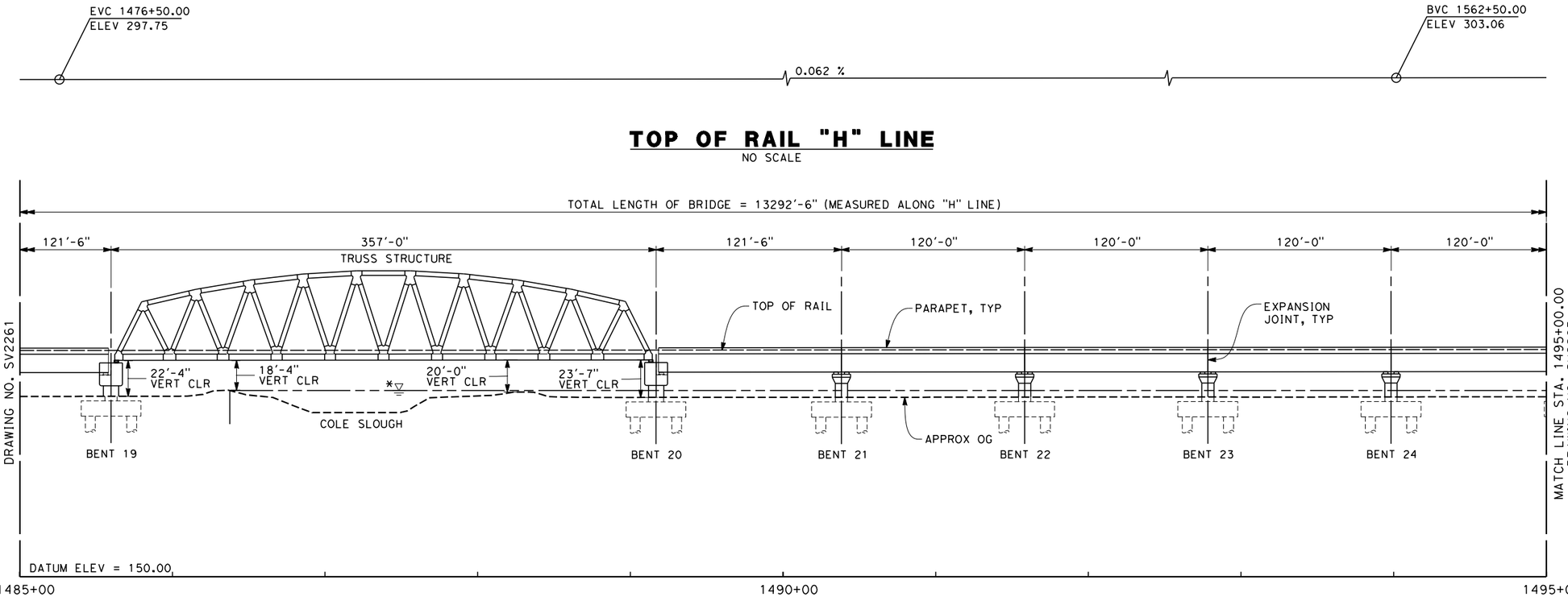


NOTES

1. NOT ALL PILES SHOWN
2. PILE LENGTH TO BE DETERMINED
3. SUPERSTRUCTURE CONSTRUCTION, UON
   SIMPLE SPANS - MSS OR FLPM
   CONTINUOUS SPANS - BCC - PRECAST IN-SITU
   STEEL TRUSS - INSITU, SLID OR LAUNCHED
   ELEVATED SLABS - PC BEAM AND INSITU SLAB
4. UTILITY LOCATIONS TO BE DETERMINED
5. ACCESS STAIRWAYS ARE PROVIDED AT SYSTEMS SITES (APPROX. 2.5 MILE INTERVALS). LADDER ACCESS TO VIADUCTS IS PROVIDED AT 2500 FT INTERVALS WITH ACCESS ROAD AND TURNING CIRCLE WHERE NECESSARY.

LEGEND:

1. STRUCTURE APPROACH SLAB
2. RETAINING WALL

* ESTIMATED 100-YEAR FLOOD ELEVATION, SEE "FRESNO TO BAKERSFIELD CORRIDOR HYDROLOGY, HYDRAULICS AND DRAINAGE 15% DRAFT REPORT".

CURVE DATA

(7)

R = 36500.00'
Δ = 58° 05' 38.8"
T = 20271.5'
L = 37008.6'

04/02/2014 - RFP No.: HSR 13-57

| REV | DATE | BY | CHK | APP | DESCRIPTION |
|---|---|---|---|---|---|

DESIGNED BY M. FISHER
DRAWN BY D. ORIZA
CHECKED BY A. ARMSTRONG
IN CHARGE R. COFFIN
DATE 12/31/13

**RECORD SET 15% DESIGN SUBMISSION - NOT FOR CONSTRUCTION**

URS | HMM | ARUP
CALIFORNIA HIGH-SPEED TRAIN

CALIFORNIA HIGH-SPEED RAIL AUTHORITY

# CALIFORNIA HIGH-SPEED TRAIN PROJECT
# FRESNO TO BAKERSFIELD
HANFORD SUBSECTION
ALIGNMENT H
KINGS RIVER VIADUCT
PLAN AND ELEVATION

CONTRACT NO. HSR 06-0003
DRAWING NO. SV2262
SCALE AS SHOWN
SHEET NO. 5 OF 18

frank.palermo 12/23/2013 2:39:25 PM c:\pwworking\hmm\external\frank.palermo01-arup.com\d0128411\FB-SV-2262-H.dgn

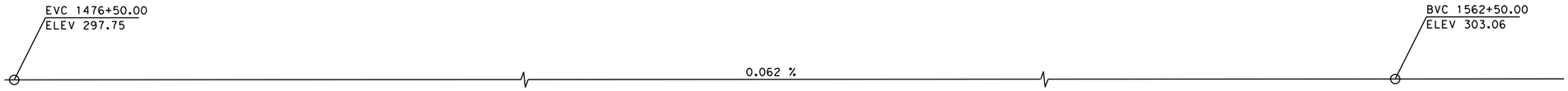


## TOP OF RAIL "H" LINE

NO SCALE

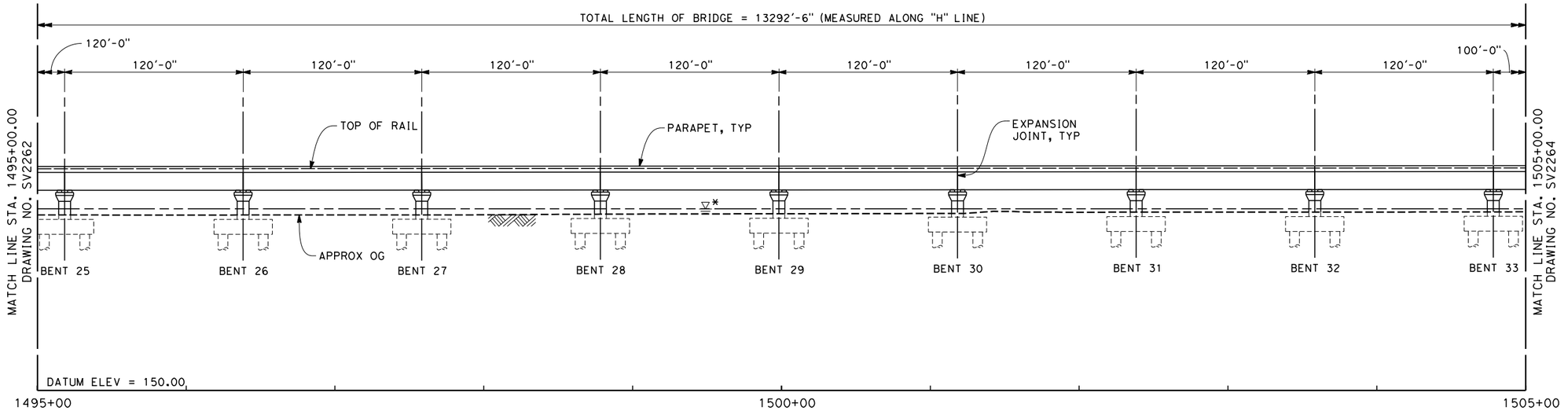


## ELEVATION

SCALE 1" = 40'

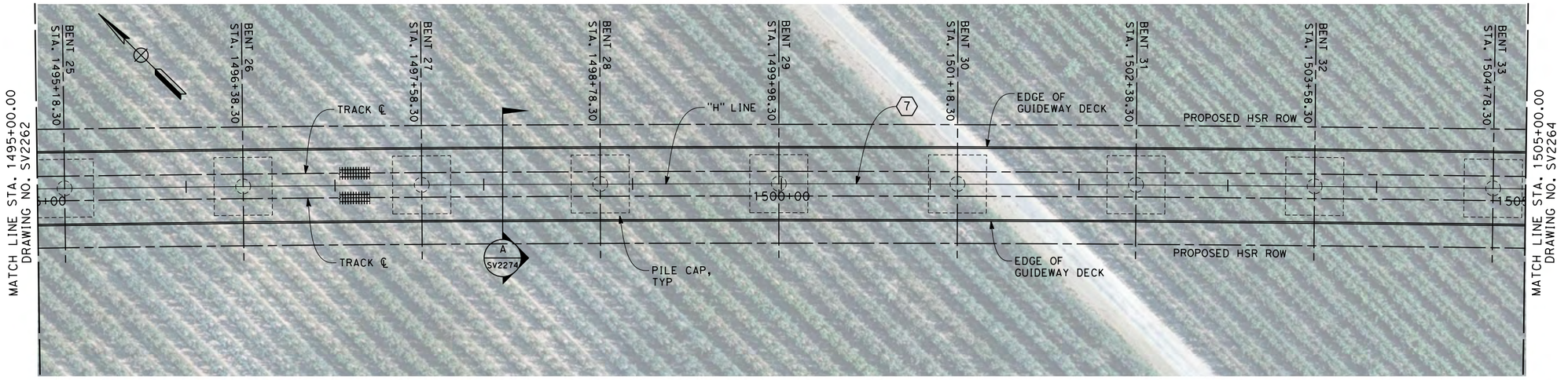


## PLAN

SCALE 1" = 40'

NOTES

1. NOT ALL PILES SHOWN
2. PILE LENGTH TO BE DETERMINED
3. SUPERSTRUCTURE CONSTRUCTION, UON
   SIMPLE SPANS - MSS OR FLPM
   CONTINUOUS SPANS - BCC - PRECAST IN-SITU
   STEEL TRUSS - INSITU, SLID OR LAUNCHED
   ELEVATED SLABS - PC BEAM AND INSITU SLAB
4. UTILITY LOCATIONS TO BE DETERMINED
5. ACCESS STAIRWAYS ARE PROVIDED AT SYSTEMS SITES (APPROX. 2.5 MILE INTERVALS). LADDER ACCESS TO VIADUCTS IS PROVIDED AT 2500 FT INTERVALS WITH ACCESS ROAD AND TURNING CIRCLE WHERE NECESSARY.

LEGEND:

(1) STRUCTURE APPROACH SLAB

(2) RETAINING WALL

* ESTIMATED 100-YEAR FLOOD ELEVATION, SEE "FRESNO TO BAKERSFIELD CORRIDOR HYDROLOGY, HYDRAULICS AND DRAINAGE 15% DRAFT REPORT".

CURVE DATA

(7)

R = 36500.00'
Δ = 58° 05' 38.8"
T = 20271.5'
L = 37008.6'

40 0 40 80
1"=40'

04/02/2014 - RFP No.: HSR 13-57

| REV | DATE | BY | CHK | APP | DESCRIPTION |
|---|---|---|---|---|---|

DESIGNED BY M. FISHER
DRAWN BY D. ORIZA
CHECKED BY A. ARMSTRONG
IN CHARGE R. COFFIN
DATE 12/31/13

**RECORD SET 15% DESIGN SUBMISSION - NOT FOR CONSTRUCTION**

URS | HMM | ARUP
CALIFORNIA HIGH-SPEED TRAIN

CALIFORNIA HIGH-SPEED RAIL AUTHORITY

**CALIFORNIA HIGH-SPEED TRAIN PROJECT**
**FRESNO TO BAKERSFIELD**
HANFORD SUBSECTION
ALIGNMENT H
KINGS RIVER VIADUCT
PLAN AND ELEVATION

CONTRACT NO. HSR 06-0003
DRAWING NO. SV2263
SCALE AS SHOWN
SHEET NO. 6 OF 18

frank.palermo 12/23/2013 2:39:56 PM c:\pwworking\hmm\external\frank.palermo01-arup.com\d0128411\FB-SV-2263-H.dgn

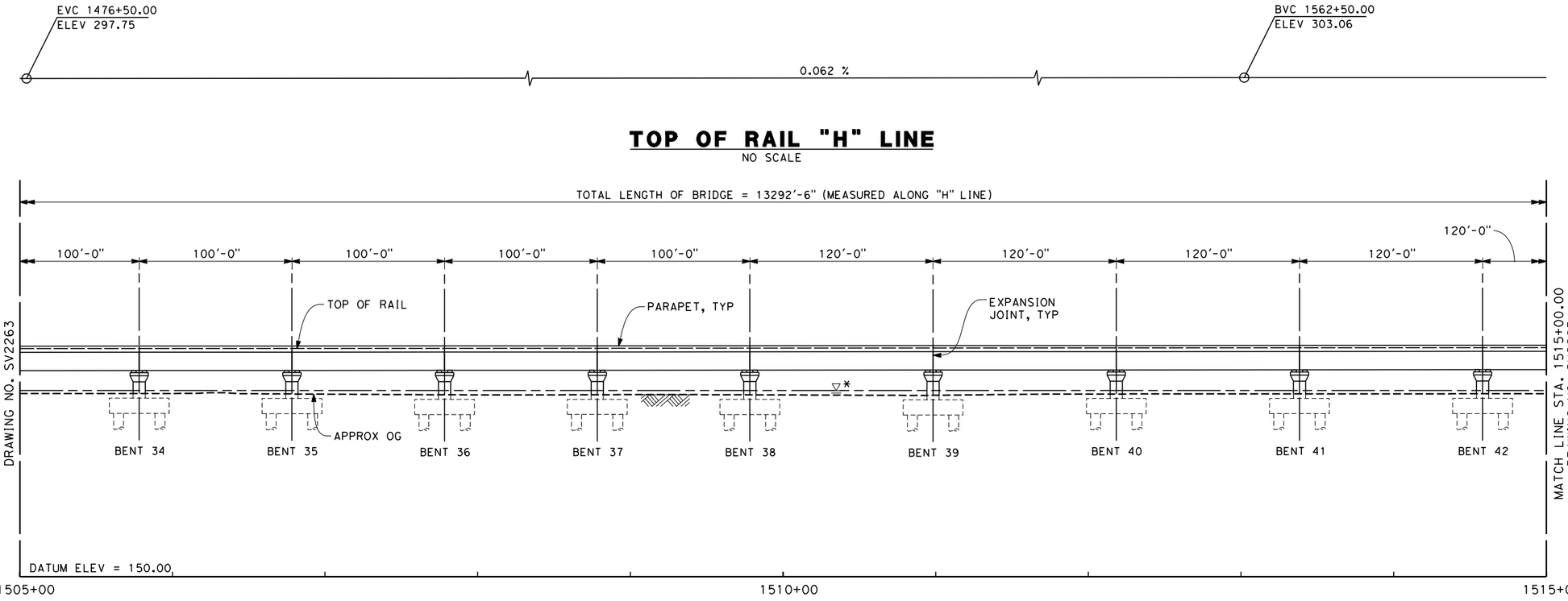


## TOP OF RAIL "H" LINE

NO SCALE

## ELEVATION

SCALE 1" = 40'

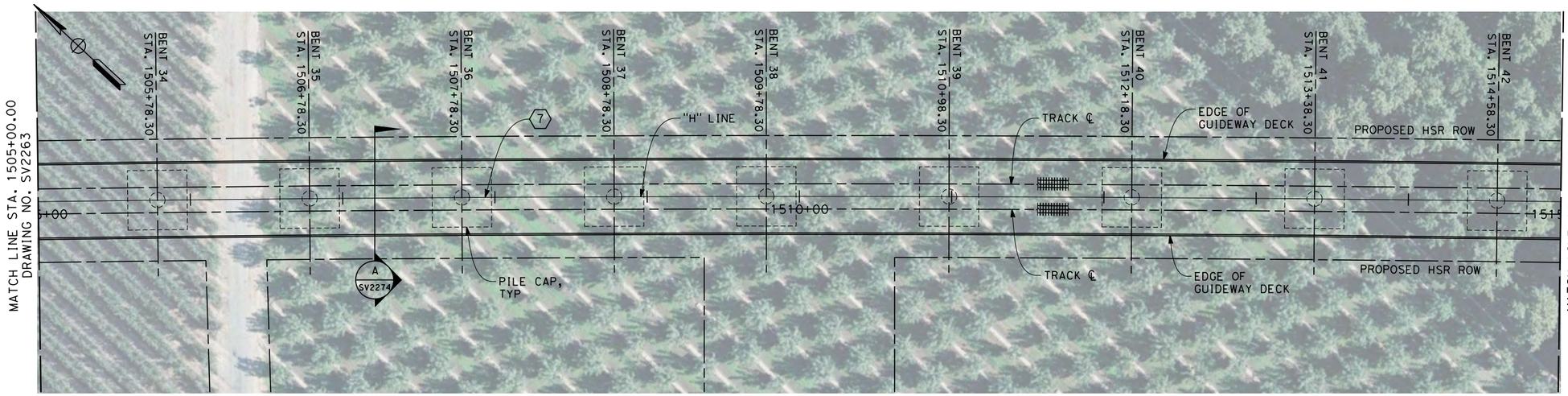


## PLAN

SCALE 1" = 40'

NOTES

1. NOT ALL PILES SHOWN
2. PILE LENGTH TO BE DETERMINED
3. SUPERSTRUCTURE CONSTRUCTION, UON
   SIMPLE SPANS - MSS OR FLPM
   CONTINUOUS SPANS - BCC - PRECAST IN-SITU
   STEEL TRUSS - INSITU, SLID OR LAUNCHED
   ELEVATED SLABS - PC BEAM AND INSITU SLAB
4. UTILITY LOCATIONS TO BE DETERMINED
5. ACCESS STAIRWAYS ARE PROVIDED AT SYSTEMS SITES (APPROX. 2.5 MILE INTERVALS). LADDER ACCESS TO VIADUCTS IS PROVIDED AT 2500 FT INTERVALS WITH ACCESS ROAD AND TURNING CIRCLE WHERE NECESSARY.

LEGEND:

(1) STRUCTURE APPROACH SLAB

(2) RETAINING WALL

* ESTIMATED 100-YEAR FLOOD ELEVATION, SEE "FRESNO TO BAKERSFIELD CORRIDOR HYDROLOGY, HYDRAULICS AND DRAINAGE 15% DRAFT REPORT".

CURVE DATA

(7)

R = 36500.00'
Δ = 58° 05' 38.8"
T = 20271.5'
L = 37008.6'

40 0 40 80
1"=40'

04/02/2014 - RFP No.: HSR 13-57

| REV | DATE | BY | CHK | APP | DESCRIPTION |
|---|---|---|---|---|---|

DESIGNED BY M. FISHER
DRAWN BY F. PALERMO
CHECKED BY A. ARMSTRONG
IN CHARGE R. COFFIN
DATE 12/31/13

RECORD SET 15% DESIGN SUBMISSION - NOT FOR CONSTRUCTION

URS | HMM | ARUP
CALIFORNIA HIGH-SPEED TRAIN

CALIFORNIA HIGH-SPEED RAIL AUTHORITY

**CALIFORNIA HIGH-SPEED TRAIN PROJECT**
**FRESNO TO BAKERSFIELD**
HANFORD SUBSECTION
ALIGNMENT H
KINGS RIVER VIADUCT
PLAN AND ELEVATION

CONTRACT NO. HSR 06-0003
DRAWING NO. SV2264
SCALE AS SHOWN
SHEET NO. 7 OF 18

frank.palermo 12/23/2013 2:40:21 PM c:\pwworking\hmm\external\frank.palermo01-arup.com\d0128411\FB-SV-2264-H.dgn

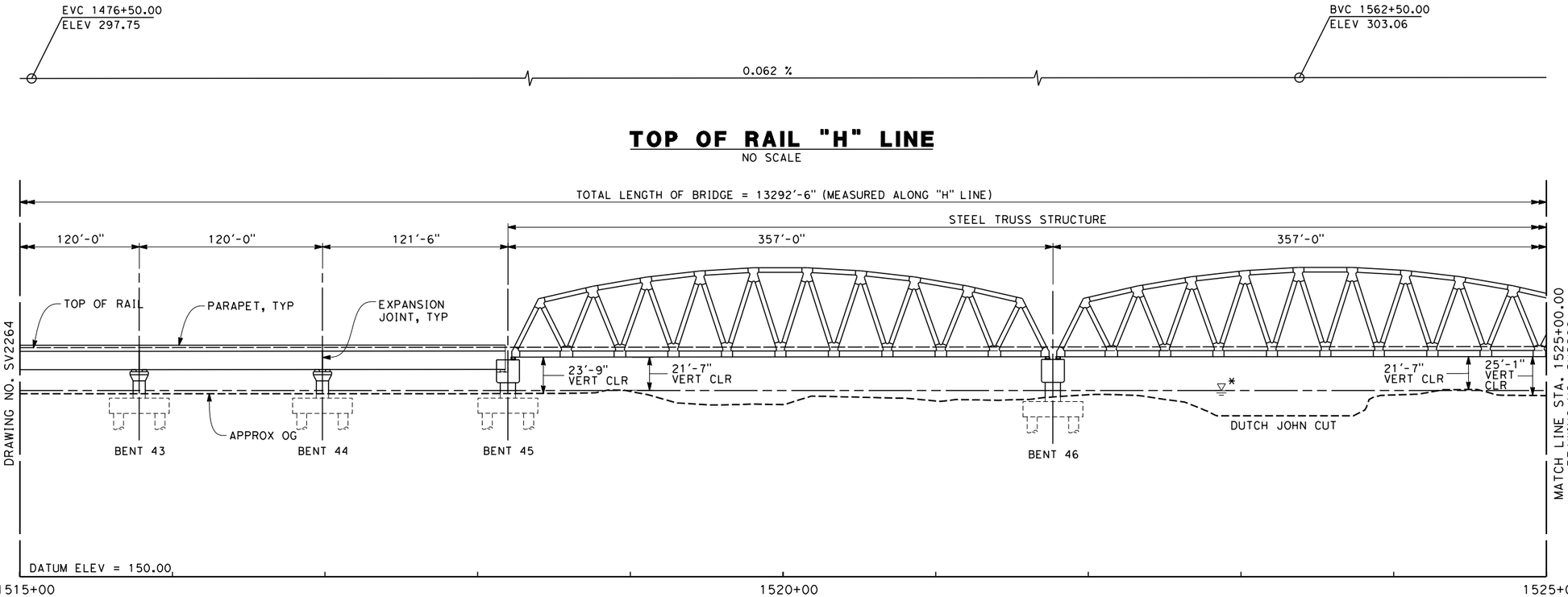


## TOP OF RAIL "H" LINE
NO SCALE

## ELEVATION
SCALE 1" = 40'

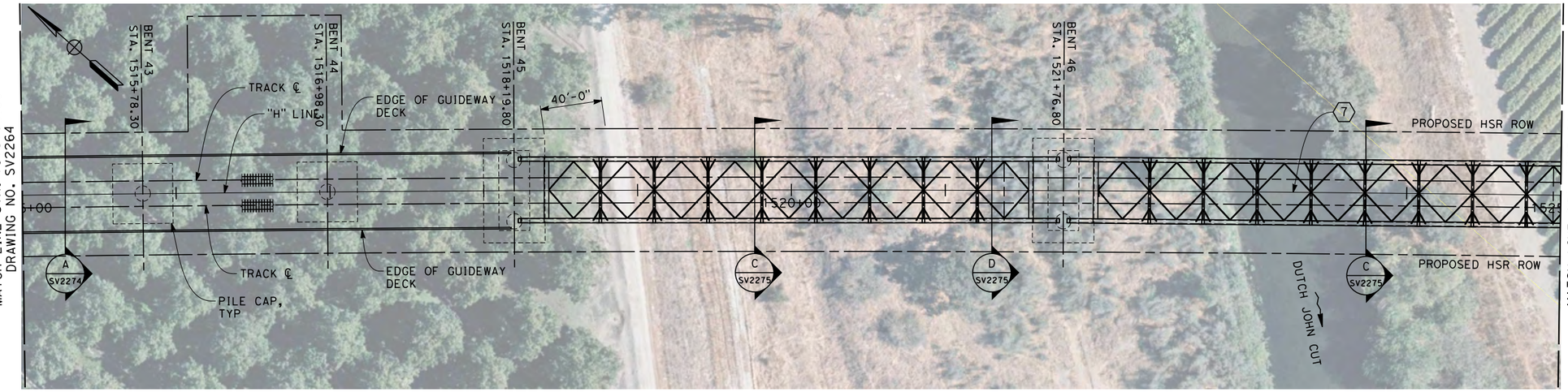


## PLAN
SCALE 1" = 40'

NOTES
1. NOT ALL PILES SHOWN
2. PILE LENGTH TO BE DETERMINED
3. SUPERSTRUCTURE CONSTRUCTION, UON
   SIMPLE SPANS - MSS OR FLPM
   CONTINUOUS SPANS - BCC - PRECAST IN-SITU
   STEEL TRUSS - INSITU, SLID OR LAUNCHED
   ELEVATED SLABS - PC BEAM AND INSITU SLAB
4. UTILITY LOCATIONS TO BE DETERMINED
5. ACCESS STAIRWAYS ARE PROVIDED AT SYSTEMS SITES (APPROX. 2.5 MILE INTERVALS). LADDER ACCESS TO VIADUCTS IS PROVIDED AT 2500 FT INTERVALS WITH ACCESS ROAD AND TURNING CIRCLE WHERE NECESSARY.

LEGEND:
(1) STRUCTURE APPROACH SLAB
(2) RETAINING WALL
* ESTIMATED 100-YEAR FLOOD ELEVATION, SEE "FRESNO TO BAKERSFIELD CORRIDOR HYDROLOGY, HYDRAULICS AND DRAINAGE 15% DRAFT REPORT".

CURVE DATA

(7)

R = 36500.00'
Δ = 58° 05' 38.8"
T = 20271.5'
L = 37008.6'

40 0 40 80
1"=40'

04/02/2014 - RFP No.: HSR 13-57

| REV | DATE | BY | CHK | APP | DESCRIPTION |
|---|---|---|---|---|---|
| | | | | | |

DESIGNED BY M. FISHER
DRAWN BY F. PALERMO
CHECKED BY A. ARMSTRONG
IN CHARGE R. COFFIN
DATE 12/31/13

RECORD SET 15% DESIGN SUBMISSION - NOT FOR CONSTRUCTION

URS | HMM | ARUP
CALIFORNIA HIGH-SPEED TRAIN

CALIFORNIA HIGH-SPEED RAIL AUTHORITY

# CALIFORNIA HIGH-SPEED TRAIN PROJECT
# FRESNO TO BAKERSFIELD
HANFORD SUBSECTION
ALIGNMENT H
KINGS RIVER VIADUCT
PLAN AND ELEVATION

CONTRACT NO. HSR 06-0003
DRAWING NO. SV2265
SCALE AS SHOWN
SHEET NO. 8 OF 18

frank.palermo 12/23/2013 2:40:44 PM c:\pwworking\hmm\external\frank.palermo01-arup.com\d0128411\FB-SV-2265-H.dgn

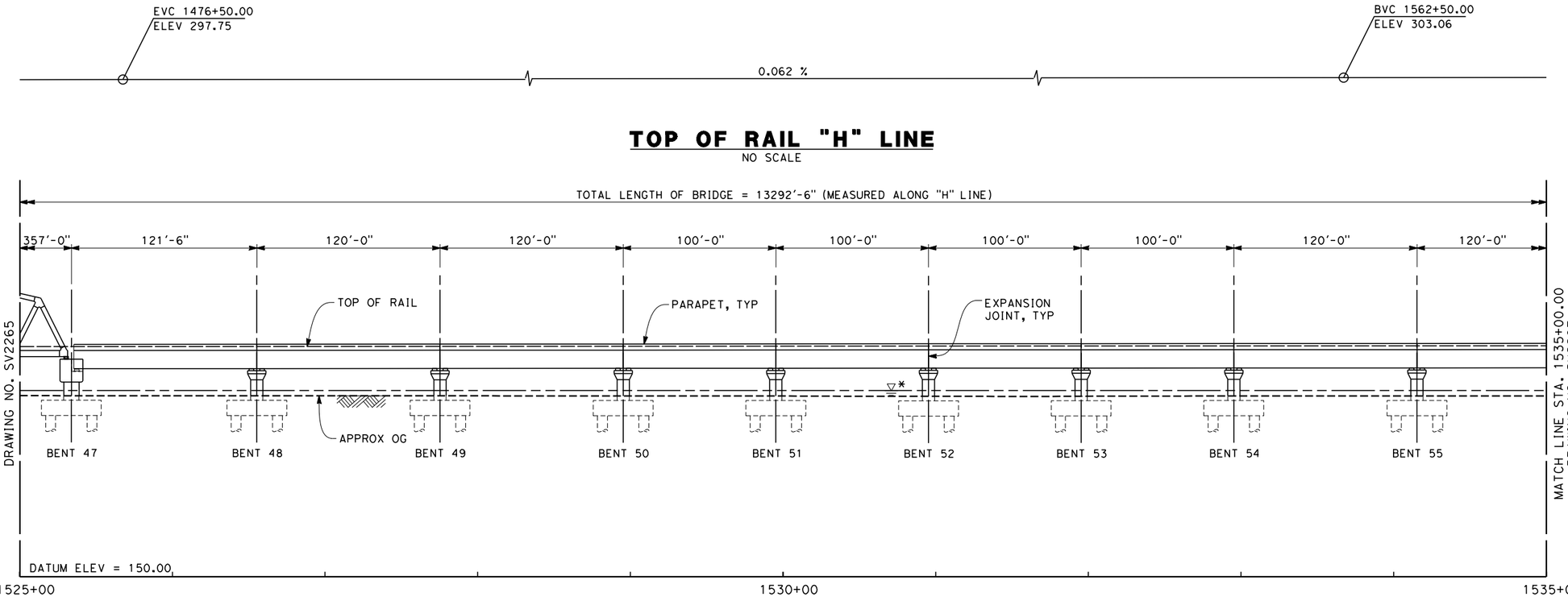


## TOP OF RAIL "H" LINE

NO SCALE

## ELEVATION

SCALE 1" = 40'

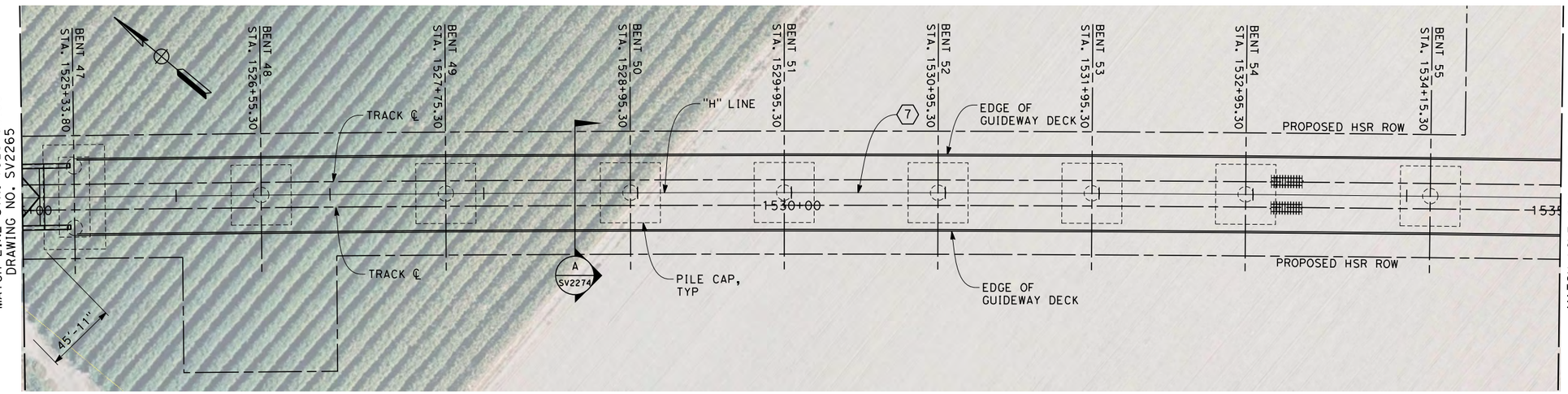


## PLAN

SCALE 1" = 40'

### NOTES

1. NOT ALL PILES SHOWN
2. PILE LENGTH TO BE DETERMINED
3. SUPERSTRUCTURE CONSTRUCTION, UON
   SIMPLE SPANS - MSS OR FLPM
   CONTINUOUS SPANS - BCC - PRECAST IN-SITU
   STEEL TRUSS - INSITU, SLID OR LAUNCHED
   ELEVATED SLABS - PC BEAM AND INSITU SLAB
4. UTILITY LOCATIONS TO BE DETERMINED
5. ACCESS STAIRWAYS ARE PROVIDED AT SYSTEMS SITES (APPROX. 2.5 MILE INTERVALS). LADDER ACCESS TO VIADUCTS IS PROVIDED AT 2500 FT INTERVALS WITH ACCESS ROAD AND TURNING CIRCLE WHERE NECESSARY.

LEGEND:

(1) STRUCTURE APPROACH SLAB

(2) RETAINING WALL

* ESTIMATED 100-YEAR FLOOD ELEVATION, SEE "FRESNO TO BAKERSFIELD CORRIDOR HYDROLOGY, HYDRAULICS AND DRAINAGE 15% DRAFT REPORT".

CURVE DATA

(7)

R = 36500.00'
Δ = 58° 05' 38.8"
T = 20271.5'
L = 37008.6'

40 0 40 80
1"=40'

04/02/2014 - RFP No.: HSR 13-57

| REV | DATE | BY | CHK | APP | DESCRIPTION |
|---|---|---|---|---|---|

DESIGNED BY M. FISHER
DRAWN BY F. PALERMO
CHECKED BY A. ARMSTRONG
IN CHARGE R. COFFIN
DATE 12/31/13

**RECORD SET 15% DESIGN SUBMISSION - NOT FOR CONSTRUCTION**

URS | HMM | ARUP
CALIFORNIA HIGH-SPEED TRAIN

CALIFORNIA HIGH-SPEED RAIL AUTHORITY

**CALIFORNIA HIGH-SPEED TRAIN PROJECT**
**FRESNO TO BAKERSFIELD**
HANFORD SUBSECTION
ALIGNMENT H
KINGS RIVER VIADUCT
PLAN AND ELEVATION

CONTRACT NO. HSR 06-0003
DRAWING NO. SV2266
SCALE AS SHOWN
SHEET NO. 9 OF 18

frank.palermo 12/23/2013 2:41:01 PM c:\pwworking\hmm\external\frank.palermo01-arup.com\d0128411\FB-SV-2266-H.dgn

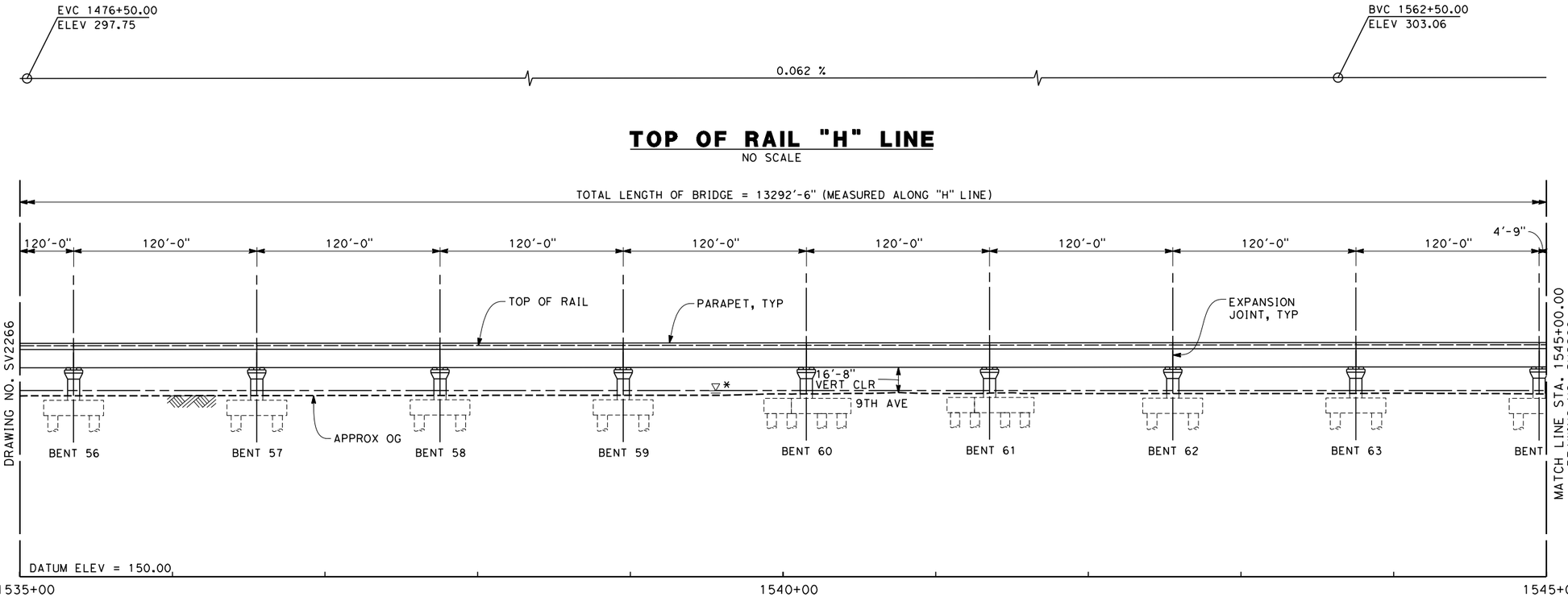


**TOP OF RAIL "H" LINE**
NO SCALE

**ELEVATION**
SCALE 1" = 40'

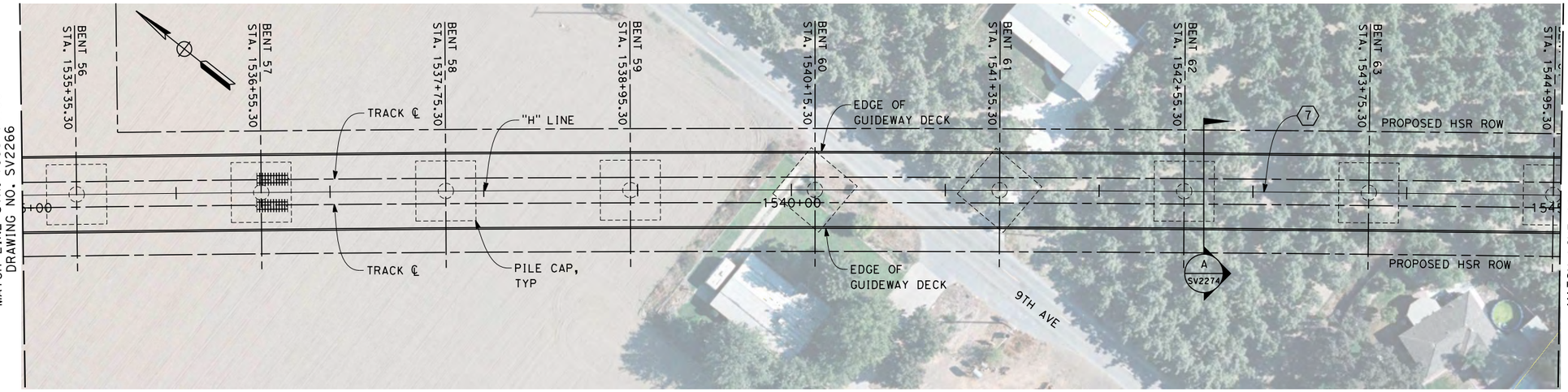


**PLAN**
SCALE 1" = 40'

NOTES
1. NOT ALL PILES SHOWN
2. PILE LENGTH TO BE DETERMINED
3. SUPERSTRUCTURE CONSTRUCTION, UON
   SIMPLE SPANS - MSS OR FLPM
   CONTINUOUS SPANS - BCC - PRECAST IN-SITU
   STEEL TRUSS - INSITU, SLID OR LAUNCHED
   ELEVATED SLABS - PC BEAM AND INSITU SLAB
4. UTILITY LOCATIONS TO BE DETERMINED
5. ACCESS STAIRWAYS ARE PROVIDED AT SYSTEMS SITES (APPROX. 2.5 MILE INTERVALS). LADDER ACCESS TO VIADUCTS IS PROVIDED AT 2500 FT INTERVALS WITH ACCESS ROAD AND TURNING CIRCLE WHERE NECESSARY.

LEGEND:
① STRUCTURE APPROACH SLAB
② RETAINING WALL
* ESTIMATED 100-YEAR FLOOD ELEVATION, SEE "FRESNO TO BAKERSFIELD CORRIDOR HYDROLOGY, HYDRAULICS AND DRAINAGE 15% DRAFT REPORT".

CURVE DATA

⑦

R = 36500.00'
Δ = 58° 05' 38.8"
T = 20271.5'
L = 37008.6'

40 0 40 80
1"=40'

04/02/2014 - RFP No.: HSR 13-57

| REV | DATE | BY | CHK | APP | DESCRIPTION |
|---|---|---|---|---|---|

DESIGNED BY M. FISHER
DRAWN BY F. PALERMO
CHECKED BY A. ARMSTRONG
IN CHARGE R. COFFIN
DATE 12/31/13

**RECORD SET 15% DESIGN SUBMISSION - NOT FOR CONSTRUCTION**

URS | HMM | ARUP
CALIFORNIA HIGH-SPEED TRAIN

CALIFORNIA HIGH-SPEED RAIL AUTHORITY

**CALIFORNIA HIGH-SPEED TRAIN PROJECT**
**FRESNO TO BAKERSFIELD**
HANFORD SUBSECTION
ALIGNMENT H
KINGS RIVER VIADUCT
PLAN AND ELEVATION

CONTRACT NO. HSR 06-0003
DRAWING NO. SV2267
SCALE AS SHOWN
SHEET NO. 10 OF 18

frank.palermo 12/23/2013 2:41:18 PM c:\pwworking\hmm\external\frank.palermo01-arup.com\d0128411\FB-SV-2267-H.dgn

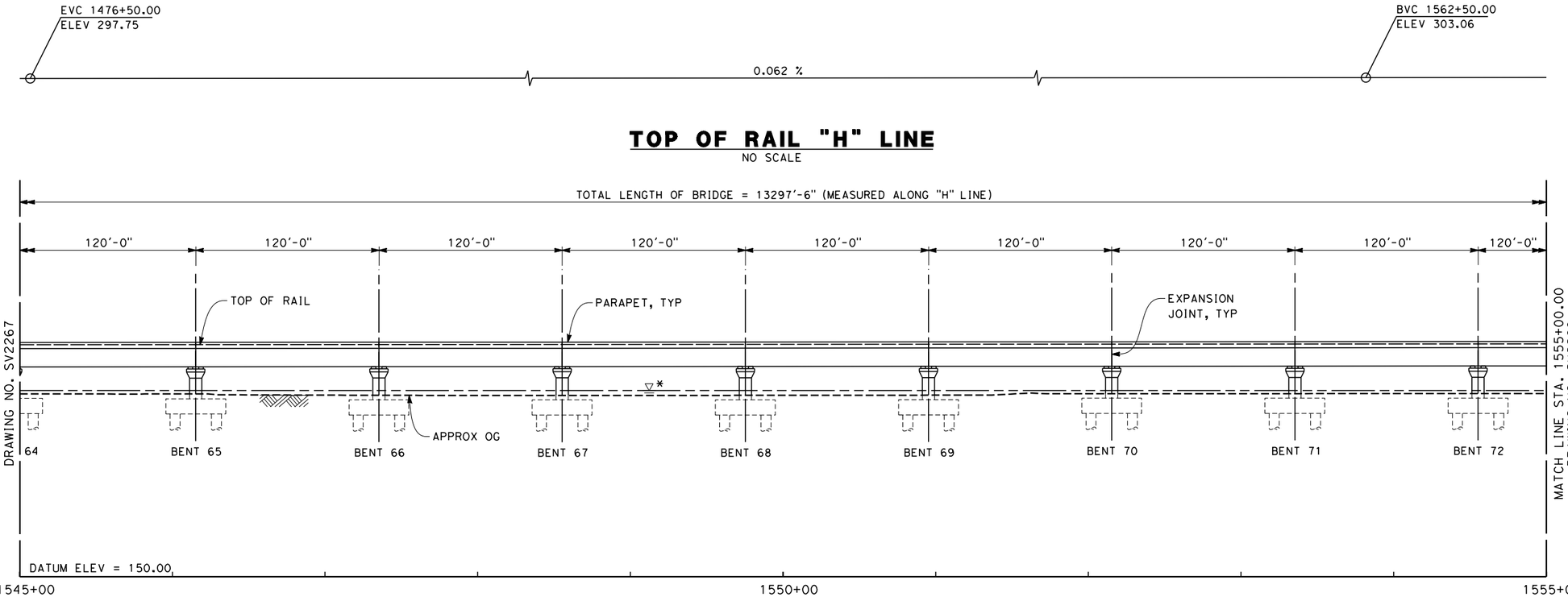


## TOP OF RAIL "H" LINE
NO SCALE

## ELEVATION
SCALE 1" = 40'

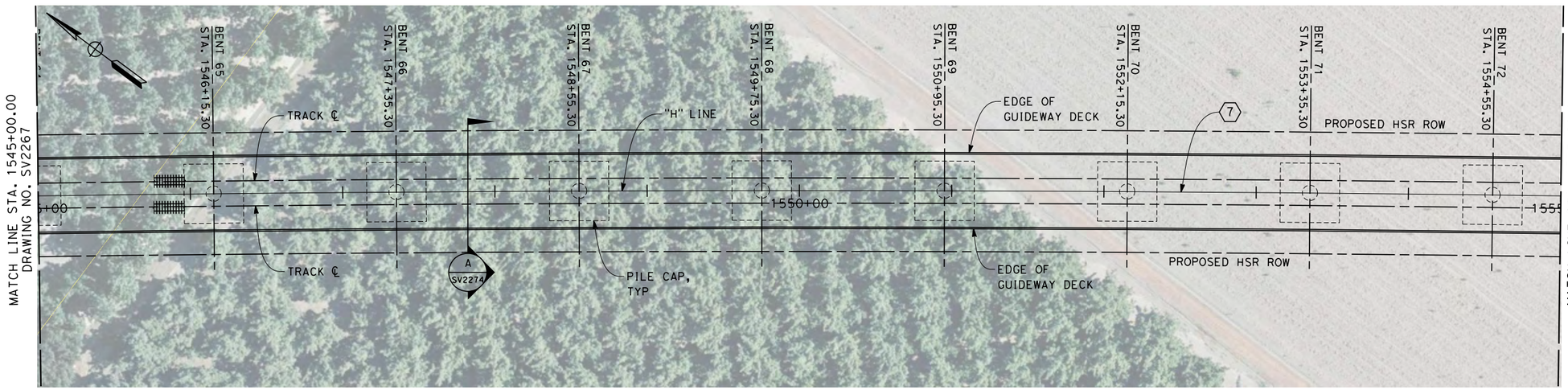


## PLAN
SCALE 1" = 40'

NOTES
1. NOT ALL PILES SHOWN
2. PILE LENGTH TO BE DETERMINED
3. SUPERSTRUCTURE CONSTRUCTION, UON
   SIMPLE SPANS - MSS OR FLPM
   CONTINUOUS SPANS - BCC - PRECAST IN-SITU
   STEEL TRUSS - INSITU, SLID OR LAUNCHED
   ELEVATED SLABS - PC BEAM AND INSITU SLAB
4. UTILITY LOCATIONS TO BE DETERMINED
5. ACCESS STAIRWAYS ARE PROVIDED AT SYSTEMS SITES (APPROX. 2.5 MILE INTERVALS). LADDER ACCESS TO VIADUCTS IS PROVIDED AT 2500 FT INTERVALS WITH ACCESS ROAD AND TURNING CIRCLE WHERE NECESSARY.

LEGEND:
1. STRUCTURE APPROACH SLAB
2. RETAINING WALL
* ESTIMATED 100-YEAR FLOOD ELEVATION, SEE "FRESNO TO BAKERSFIELD CORRIDOR HYDROLOGY, HYDRAULICS AND DRAINAGE 15% DRAFT REPORT".

CURVE DATA

⑦

R = 36500.00'
Δ = 58° 05' 38.8"
T = 20271.5'
L = 37008.6'

40 0 40 80
1"=40'

04/02/2014 - RFP No.: HSR 13-57

| REV | DATE | BY | CHK | APP | DESCRIPTION |
|---|---|---|---|---|---|

DESIGNED BY M. FISHER
DRAWN BY F. PALERMO
CHECKED BY A. ARMSTRONG
IN CHARGE R. COFFIN
DATE 12/31/13

RECORD SET 15% DESIGN SUBMISSION - NOT FOR CONSTRUCTION

URS | HMM | ARUP
CALIFORNIA HIGH-SPEED TRAIN

CALIFORNIA HIGH-SPEED RAIL AUTHORITY

**CALIFORNIA HIGH-SPEED TRAIN PROJECT**
**FRESNO TO BAKERSFIELD**
HANFORD SUBSECTION
ALIGNMENT H
KINGS RIVER VIADUCT
PLAN AND ELEVATION

CONTRACT NO. HSR 06-0003
DRAWING NO. SV2268
SCALE AS SHOWN
SHEET NO. 11 OF 18

frank.palermo 12/23/2013 2:41:33 PM c:\pwworking\hmm\external\frank.palermo01-arup.com\d0128411\FB-SV-2268-H.dgn

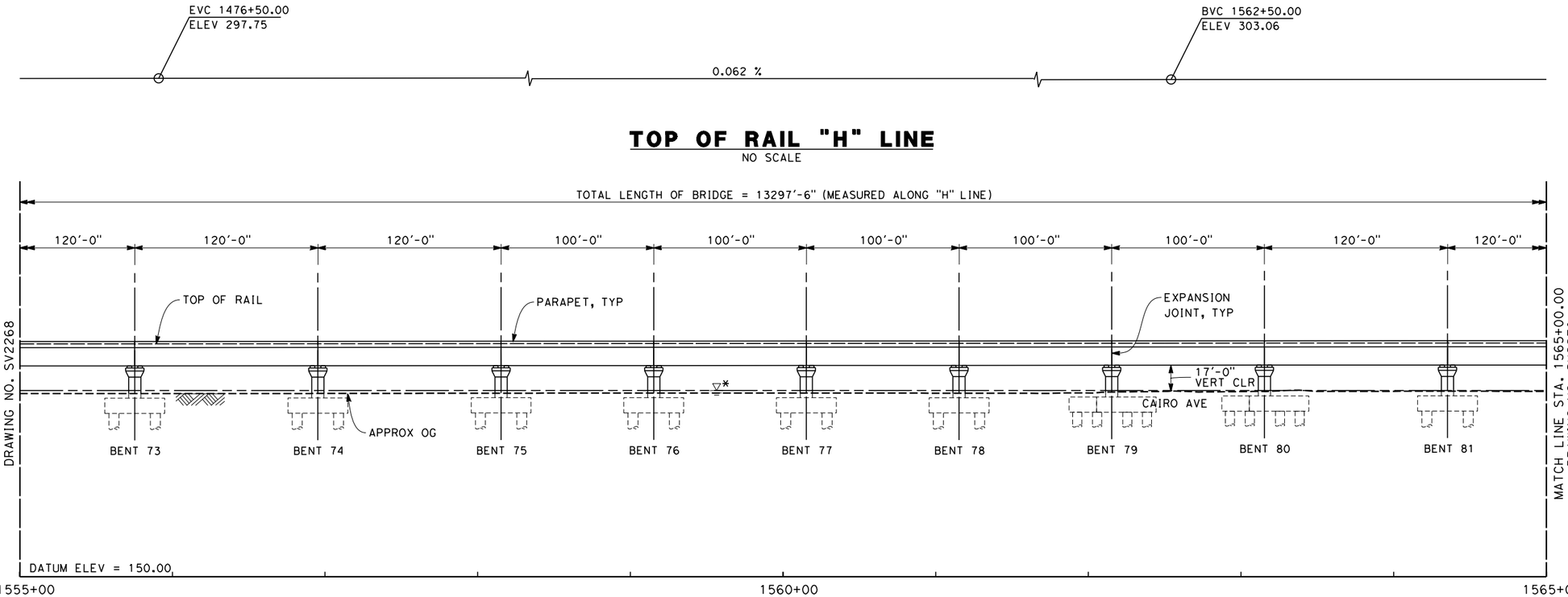


## TOP OF RAIL "H" LINE

NO SCALE

## ELEVATION

SCALE 1" = 40'

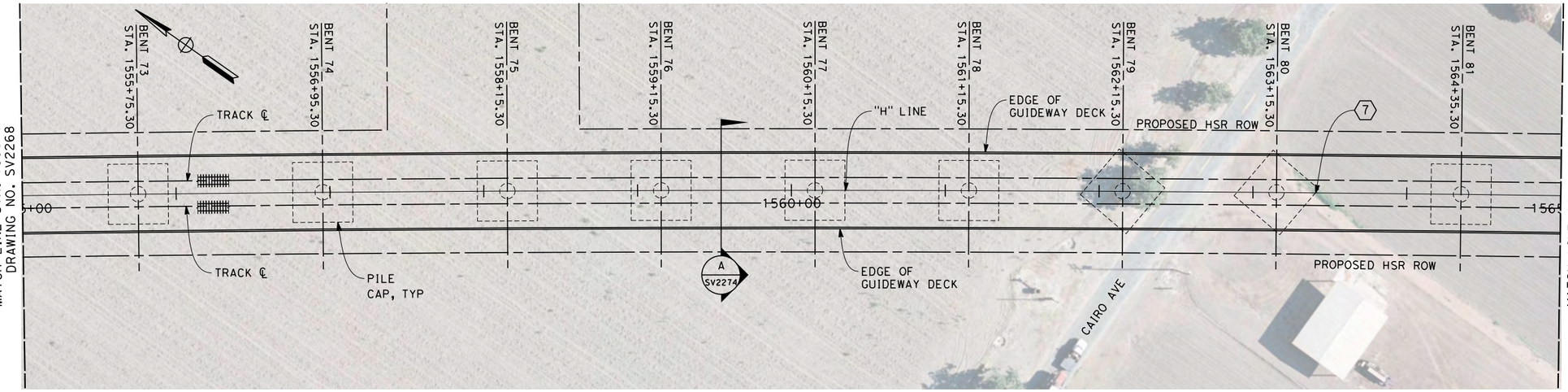


## PLAN

SCALE 1" = 40'

NOTES

1. NOT ALL PILES SHOWN
2. PILE LENGTH TO BE DETERMINED
3. SUPERSTRUCTURE CONSTRUCTION, UON
   SIMPLE SPANS - MSS OR FLPM
   CONTINUOUS SPANS - BCC - PRECAST IN-SITU
   STEEL TRUSS - INSITU, SLID OR LAUNCHED
   ELEVATED SLABS - PC BEAM AND INSITU SLAB
4. UTILITY LOCATIONS TO BE DETERMINED
5. ACCESS STAIRWAYS ARE PROVIDED AT SYSTEMS SITES (APPROX. 2.5 MILE INTERVALS). LADDER ACCESS TO VIADUCTS IS PROVIDED AT 2500 FT INTERVALS WITH ACCESS ROAD AND TURNING CIRCLE WHERE NECESSARY.

LEGEND:

(1) STRUCTURE APPROACH SLAB

(2) RETAINING WALL

* ESTIMATED 100-YEAR FLOOD ELEVATION, SEE "FRESNO TO BAKERSFIELD CORRIDOR HYDROLOGY, HYDRAULICS AND DRAINAGE 15% DRAFT REPORT".

CURVE DATA

(7)

R = 36500.00'
Δ = 58° 05' 38.8"
T = 20271.5'
L = 37008.6'

40 0 40 80
1"=40'

04/02/2014 - RFP No.: HSR 13-57

| REV | DATE | BY | CHK | APP | DESCRIPTION |
|---|---|---|---|---|---|

DESIGNED BY M. FISHER
DRAWN BY F. PALERMO
CHECKED BY A. ARMSTRONG
IN CHARGE R. COFFIN
DATE 12/31/13

RECORD SET 15% DESIGN SUBMISSION - NOT FOR CONSTRUCTION

URS | HMM | ARUP
CALIFORNIA HIGH-SPEED TRAIN

CALIFORNIA HIGH-SPEED RAIL AUTHORITY

**CALIFORNIA HIGH-SPEED TRAIN PROJECT**
**FRESNO TO BAKERSFIELD**
HANFORD SUBSECTION
ALIGNMENT H
KINGS RIVER VIADUCT
PLAN AND ELEVATION

CONTRACT NO. HSR 06-0003
DRAWING NO. SV2269
SCALE AS SHOWN
SHEET NO. 12 OF 18

frank.palermo 12/23/2013 2:41:47 PM c:\pwworking\hmm\external\frank.palermo01-arup.com\d0128411\FB-SV-2269-H.dgn

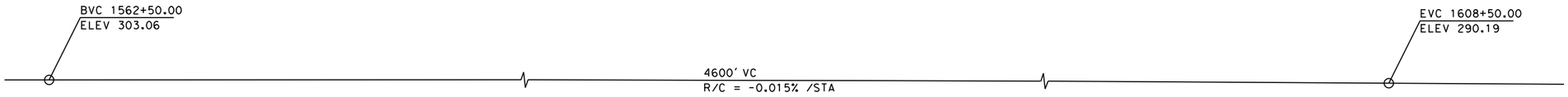


## TOP OF RAIL "H" LINE
NO SCALE

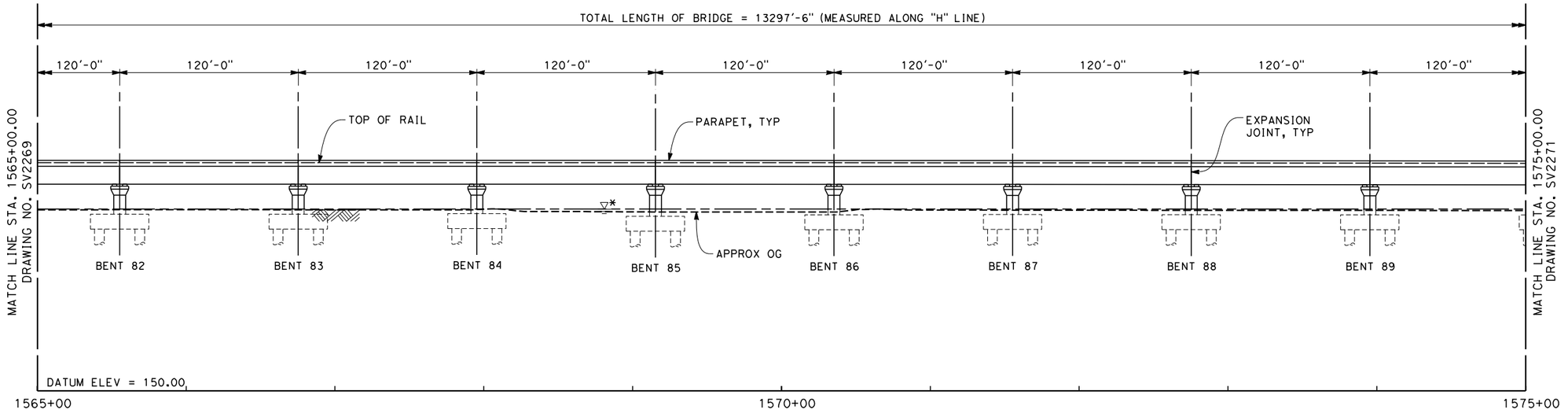


## ELEVATION
SCALE 1" = 40'

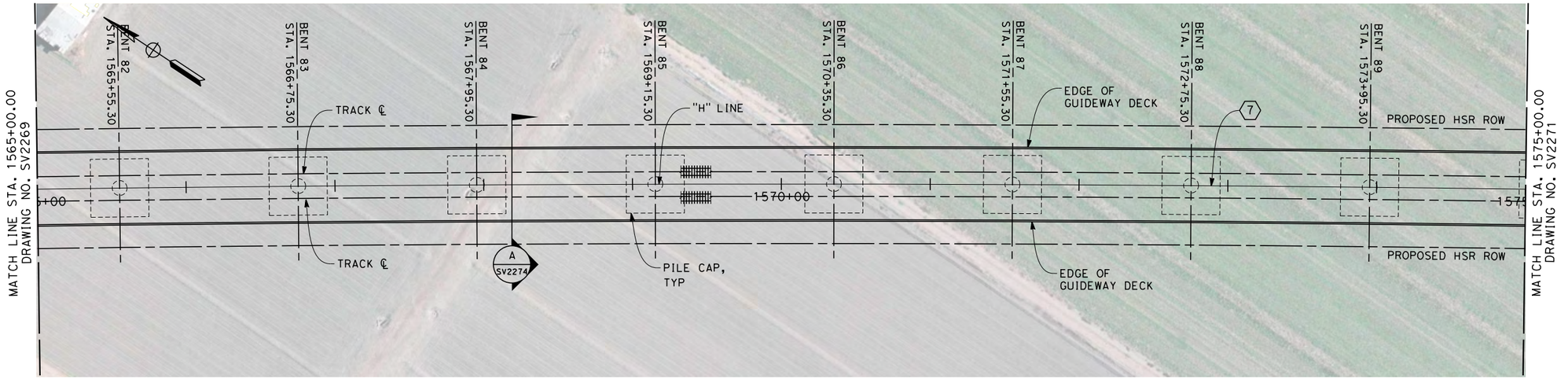


## PLAN
SCALE 1" = 40'

NOTES
1. NOT ALL PILES SHOWN
2. PILE LENGTH TO BE DETERMINED
3. SUPERSTRUCTURE CONSTRUCTION, UON
   SIMPLE SPANS - MSS OR FLPM
   CONTINUOUS SPANS - BCC - PRECAST IN-SITU
   STEEL TRUSS - INSITU, SLID OR LAUNCHED
   ELEVATED SLABS - PC BEAM AND INSITU SLAB
4. UTILITY LOCATIONS TO BE DETERMINED
5. ACCESS STAIRWAYS ARE PROVIDED AT SYSTEMS SITES (APPROX. 2.5 MILE INTERVALS). LADDER ACCESS TO VIADUCTS IS PROVIDED AT 2500 FT INTERVALS WITH ACCESS ROAD AND TURNING CIRCLE WHERE NECESSARY.

LEGEND:
1. STRUCTURE APPROACH SLAB
2. RETAINING WALL
* ESTIMATED 100-YEAR FLOOD ELEVATION, SEE "FRESNO TO BAKERSFIELD CORRIDOR HYDROLOGY, HYDRAULICS AND DRAINAGE 15% DRAFT REPORT".

CURVE DATA

(7)

R = 36500.00'
Δ = 58° 05' 38.8"
T = 20271.5'
L = 37008.6'

40 0 40 80
1"=40'

04/02/2014 - RFP No.: HSR 13-57

| REV | DATE | BY | CHK | APP | DESCRIPTION |
|---|---|---|---|---|---|

DESIGNED BY M. FISHER
DRAWN BY F. PALERMO
CHECKED BY A. ARMSTRONG
IN CHARGE R. COFFIN
DATE 12/31/13

RECORD SET 15% DESIGN SUBMISSION - NOT FOR CONSTRUCTION

URS | HMM | ARUP
CALIFORNIA HIGH-SPEED TRAIN

CALIFORNIA HIGH-SPEED RAIL AUTHORITY

**CALIFORNIA HIGH-SPEED TRAIN PROJECT**
**FRESNO TO BAKERSFIELD**
HANFORD SUBSECTION
ALIGNMENT H
KINGS RIVER VIADUCT
PLAN AND ELEVATION

CONTRACT NO. HSR 06-0003
DRAWING NO. SV2270
SCALE AS SHOWN
SHEET NO. 13 OF 18

frank.palermo 12/23/2013 2:42:01 PM c:\pwworking\hmm\external\frank.palermo01-arup.com\d0128411\FB-SV-2270-H.dgn

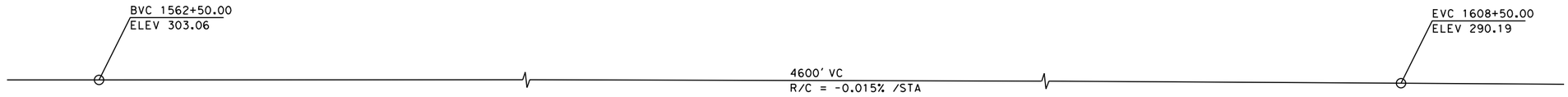


## TOP OF RAIL "H" LINE
NO SCALE

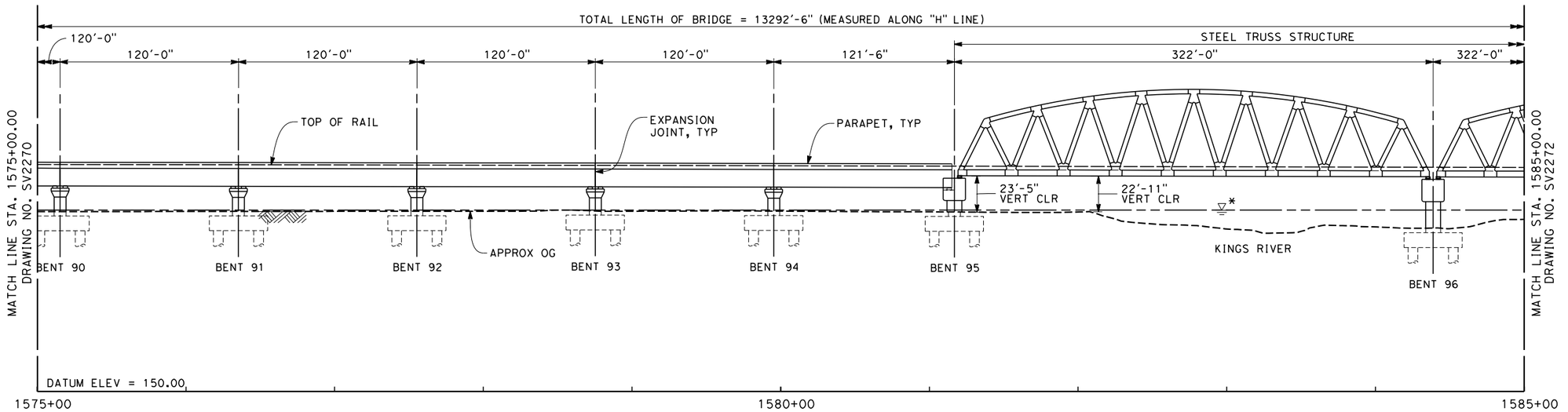


## ELEVATION
SCALE 1" = 40'

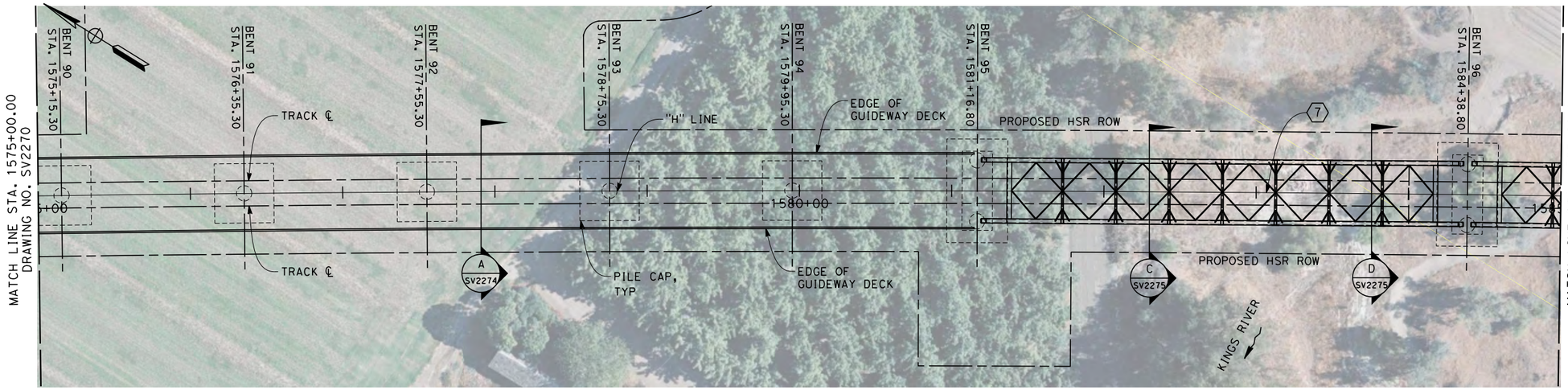


## PLAN
SCALE 1" = 40'

### NOTES
1. NOT ALL PILES SHOWN
2. PILE LENGTH TO BE DETERMINED
3. SUPERSTRUCTURE CONSTRUCTION, UON
   SIMPLE SPANS - MSS OR FLPM
   CONTINUOUS SPANS - BCC - PRECAST IN-SITU
   STEEL TRUSS - INSITU, SLID OR LAUNCHED
   ELEVATED SLABS - PC BEAM AND INSITU SLAB
4. UTILITY LOCATIONS TO BE DETERMINED
5. ACCESS STAIRWAYS ARE PROVIDED AT SYSTEMS SITES (APPROX. 2.5 MILE INTERVALS). LADDER ACCESS TO VIADUCTS IS PROVIDED AT 2500 FT INTERVALS WITH ACCESS ROAD AND TURNING CIRCLE WHERE NECESSARY.

LEGEND:

(1) STRUCTURE APPROACH SLAB

(2) RETAINING WALL

* ESTIMATED 100-YEAR FLOOD ELEVATION, SEE "FRESNO TO BAKERSFIELD CORRIDOR HYDROLOGY, HYDRAULICS AND DRAINAGE 15% DRAFT REPORT".

CURVE DATA

(7)

R = 36500.00'
Δ = 58° 05' 38.8"
T = 20271.5'
L = 37008.6'

40 0 40 80
1"=40'

04/02/2014 - RFP No.: HSR 13-57

| REV | DATE | BY | CHK | APP | DESCRIPTION |
|---|---|---|---|---|---|
| | | | | | |

DESIGNED BY M. FISHER
DRAWN BY F. PALERMO
CHECKED BY A. ARMSTRONG
IN CHARGE R. COFFIN
DATE 12/31/13

**RECORD SET 15% DESIGN SUBMISSION - NOT FOR CONSTRUCTION**

URS | HMM | ARUP
CALIFORNIA HIGH-SPEED TRAIN

CALIFORNIA HIGH-SPEED RAIL AUTHORITY

**CALIFORNIA HIGH-SPEED TRAIN PROJECT**
**FRESNO TO BAKERSFIELD**
HANFORD SUBSECTION
ALIGNMENT H
KINGS RIVER VIADUCT
PLAN AND ELEVATION

CONTRACT NO. HSR 06-0003
DRAWING NO. SV2271
SCALE AS SHOWN
SHEET NO. 14 OF 18

frank.palermo 12/23/2013 2:42:23 PM c:\pwworking\hmm\external\frank.palermo01-arup.com\d0128411\FB-SV-2271-H.dgn

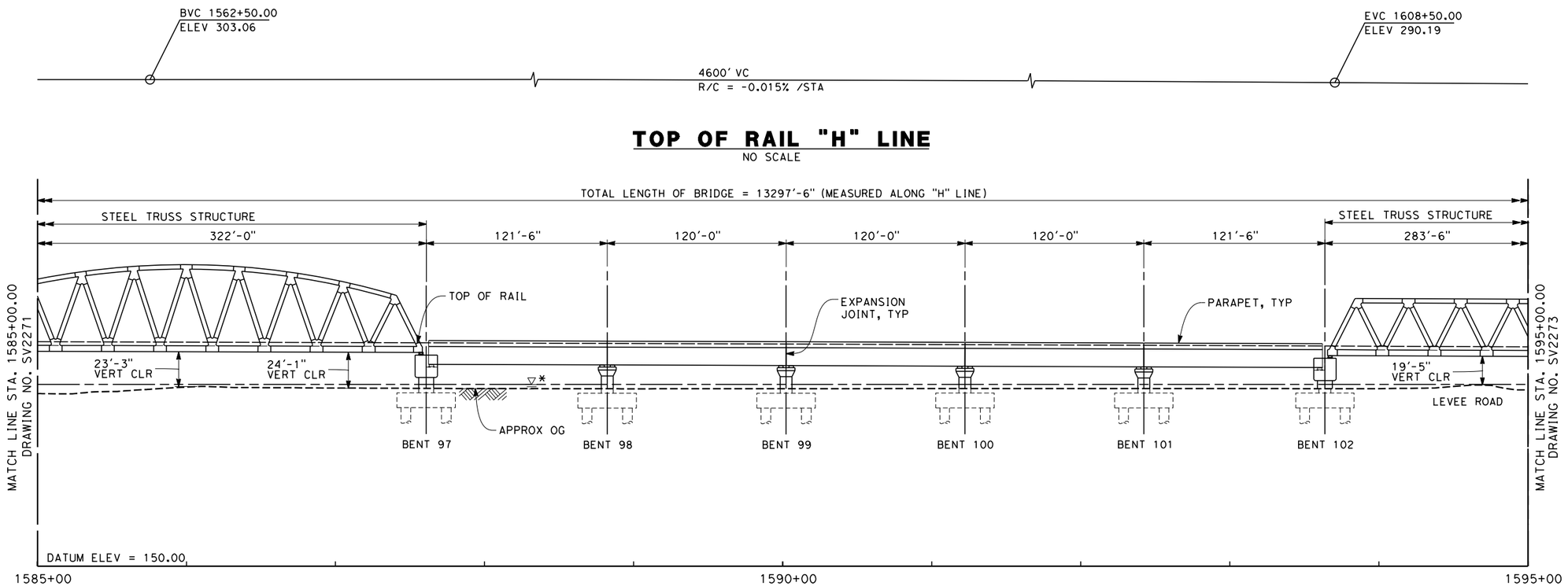


## TOP OF RAIL "H" LINE

NO SCALE

## ELEVATION

SCALE 1" = 40'

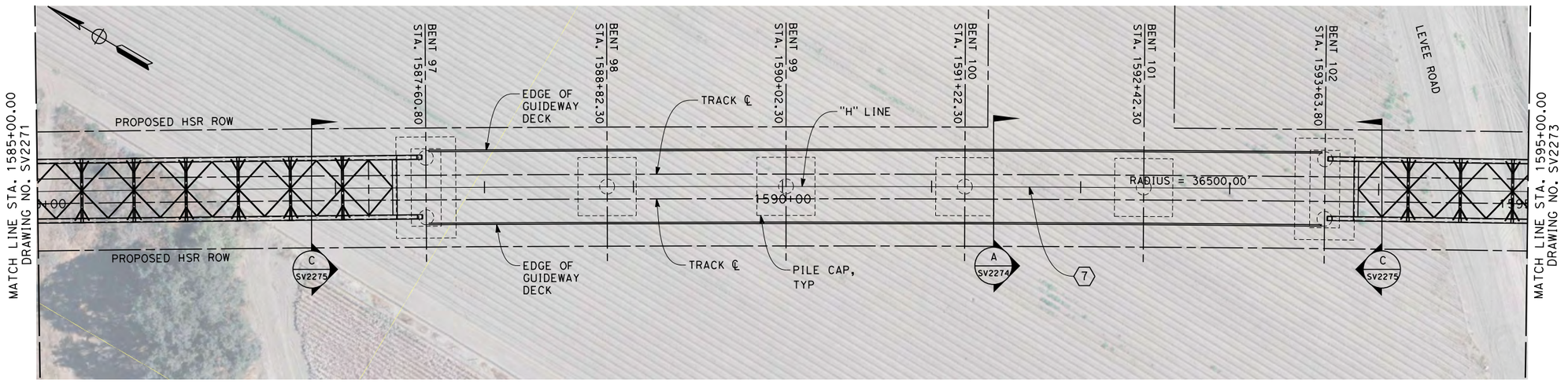


## PLAN

SCALE 1" = 40'

NOTES

1. NOT ALL PILES SHOWN
2. PILE LENGTH TO BE DETERMINED
3. SUPERSTRUCTURE CONSTRUCTION, UON
   SIMPLE SPANS - MSS OR FLPM
   CONTINUOUS SPANS - BCC - PRECAST IN-SITU
   STEEL TRUSS - INSITU, SLID OR LAUNCHED
   ELEVATED SLABS - PC BEAM AND INSITU SLAB
4. UTILITY LOCATIONS TO BE DETERMINED
5. ACCESS STAIRWAYS ARE PROVIDED AT SYSTEMS SITES (APPROX. 2.5 MILE INTERVALS). LADDER ACCESS TO VIADUCTS IS PROVIDED AT 2500 FT INTERVALS WITH ACCESS ROAD AND TURNING CIRCLE WHERE NECESSARY.

LEGEND:

(1) STRUCTURE APPROACH SLAB

(2) RETAINING WALL

* ESTIMATED 100-YEAR FLOOD ELEVATION, SEE "FRESNO TO BAKERSFIELD CORRIDOR HYDROLOGY, HYDRAULICS AND DRAINAGE 15% DRAFT REPORT".

CURVE DATA

(7)

R = 36500.00'
Δ = 58° 05' 38.8"
T = 20271.5'
L = 37008.6'

40 0 40 80
1"=40'

04/02/2014 - RFP No.: HSR 13-57

| REV | DATE | BY | CHK | APP | DESCRIPTION |
|---|---|---|---|---|---|

DESIGNED BY M. FISHER
DRAWN BY F. PALERMO
CHECKED BY A. ARMSTRONG
IN CHARGE R. COFFIN
DATE 12/31/13

**RECORD SET 15% DESIGN SUBMISSION - NOT FOR CONSTRUCTION**

URS | HMM | ARUP
CALIFORNIA HIGH-SPEED TRAIN

CALIFORNIA HIGH-SPEED RAIL AUTHORITY

**CALIFORNIA HIGH-SPEED TRAIN PROJECT**
**FRESNO TO BAKERSFIELD**
HANFORD SUBSECTION
ALIGNMENT H
KINGS RIVER VIADUCT
PLAN AND ELEVATION

CONTRACT NO. HSR 06-0003
DRAWING NO. SV2272
SCALE AS SHOWN
SHEET NO. 15 OF 18

frank.palermo 12/23/2013 2:42:38 PM c:\pwworking\hmm\external\frank.palermo01-arup.com\d0128411\FB-SV-2272-H.dgn

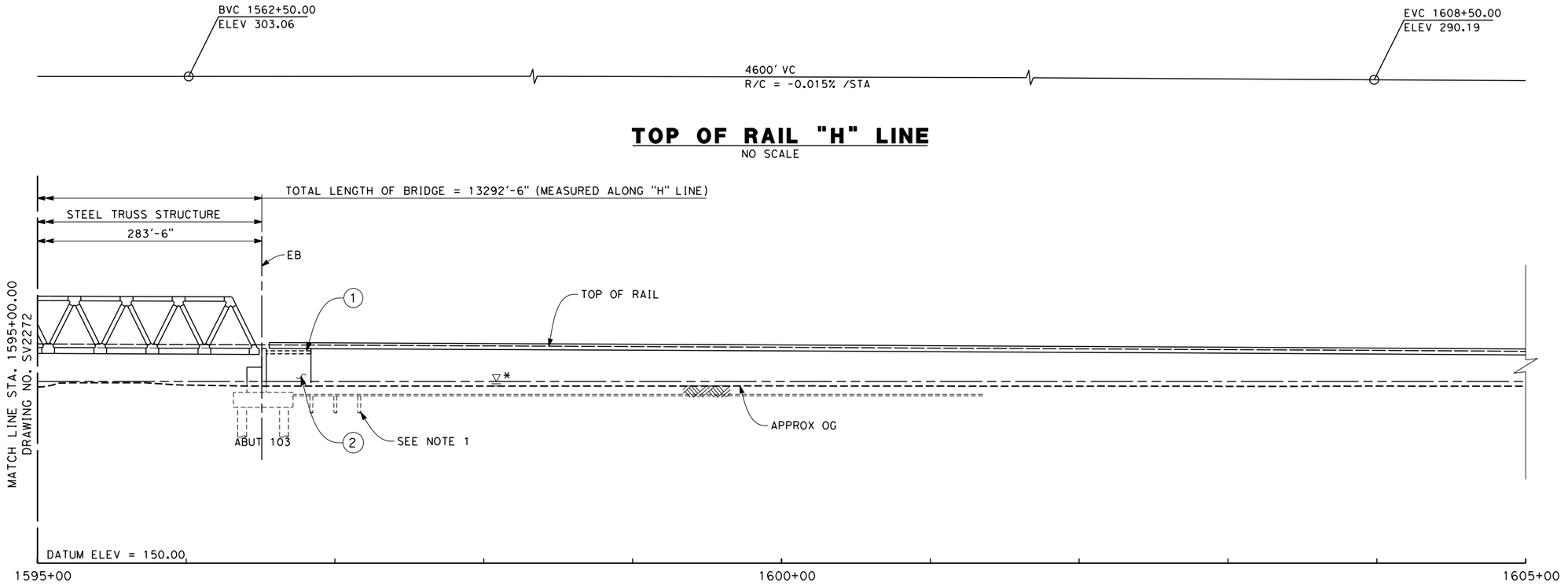


## TOP OF RAIL "H" LINE
NO SCALE

## ELEVATION
SCALE 1" = 40'

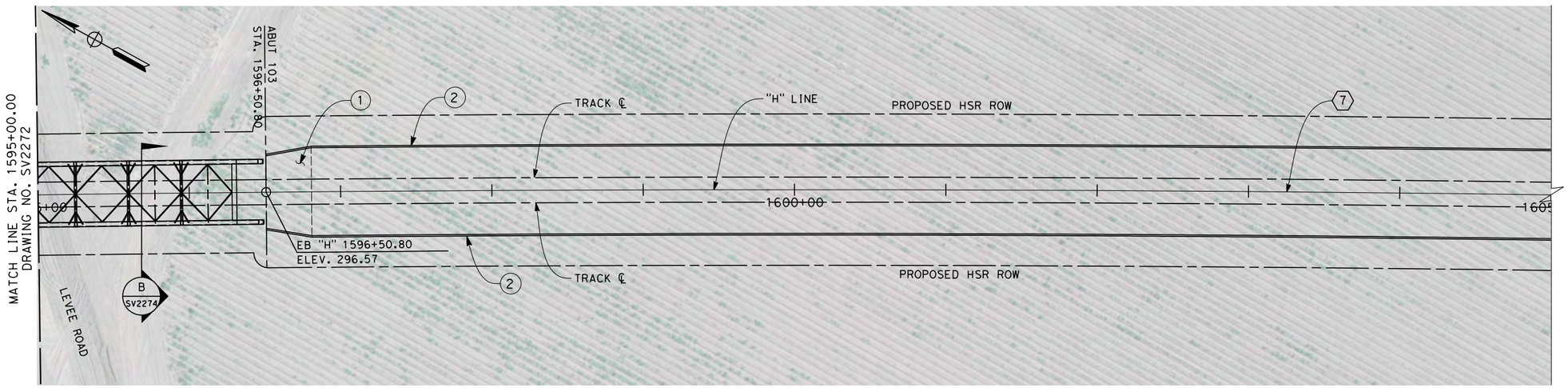


## PLAN
SCALE 1" = 40'

### NOTES
1. NOT ALL PILES SHOWN
2. PILE LENGTH TO BE DETERMINED
3. SUPERSTRUCTURE CONSTRUCTION, UON
   SIMPLE SPANS - MSS OR FLPM
   CONTINUOUS SPANS - BCC - PRECAST IN-SITU
   STEEL TRUSS - INSITU, SLID OR LAUNCHED
   ELEVATED SLABS - PC BEAM AND INSITU SLAB
4. UTILITY LOCATIONS TO BE DETERMINED
5. ACCESS STAIRWAYS ARE PROVIDED AT SYSTEMS SITES (APPROX. 2.5 MILE INTERVALS). LADDER ACCESS TO VIADUCTS IS PROVIDED AT 2500 FT INTERVALS WITH ACCESS ROAD AND TURNING CIRCLE WHERE NECESSARY.

LEGEND:

① STRUCTURE APPROACH SLAB

② RETAINING WALL

* ESTIMATED 100-YEAR FLOOD ELEVATION, SEE "FRESNO TO BAKERSFIELD CORRIDOR HYDROLOGY, HYDRAULICS AND DRAINAGE 15% DRAFT REPORT".

CURVE DATA

⑦

R = 36500.00'
Δ = 58° 05' 38.8"
T = 20271.5'
L = 37008.6'

40 0 40 80
1"=40'

04/02/2014 - RFP No.: HSR 13-57

| REV | DATE | BY | CHK | APP | DESCRIPTION |
|---|---|---|---|---|---|

DESIGNED BY M. FISHER
DRAWN BY F. PALERMO
CHECKED BY A. ARMSTRONG
IN CHARGE R. COFFIN
DATE 12/31/13

RECORD SET 15% DESIGN SUBMISSION - NOT FOR CONSTRUCTION

URS | HMM | ARUP
CALIFORNIA HIGH-SPEED TRAIN

CALIFORNIA
HIGH-SPEED RAIL AUTHORITY

**CALIFORNIA HIGH-SPEED TRAIN PROJECT**
**FRESNO TO BAKERSFIELD**
HANFORD SUBSECTION
ALIGNMENT H
KINGS RIVER VIADUCT
PLAN AND ELEVATION

CONTRACT NO. HSR 06-0003
DRAWING NO. SV2273
SCALE AS SHOWN
SHEET NO. 16 OF 18

frank.palermo 12/23/2013 2:42:53 PM c:\pwworking\hmm\external\frank.palermo01-arup.com\d0128411\FB-SV-2273-H.dgn

| COLUMN DIAMETERS | |
|---|---|
| COLUMN HEIGHT | DIAMETER |
| 0-20 | 8 FT |
| 20-40 | 10 FT |
| 40-50 | 12 FT |
| 50-60 | 15 FT |
| 60-80 | 20 FT |
| 80-100 | 25 FT |

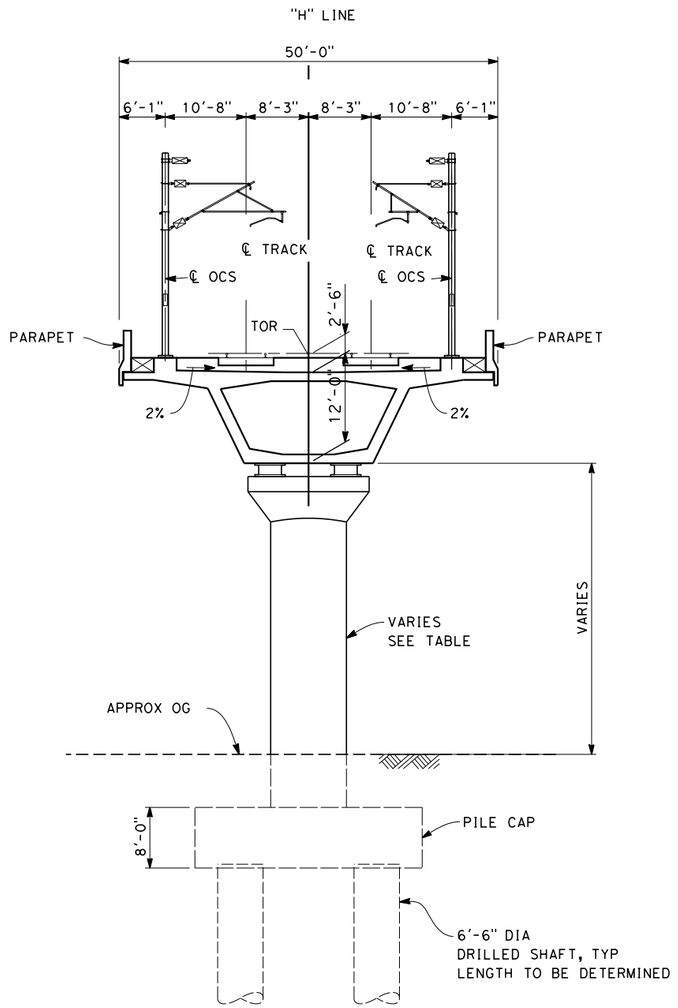


## SECTION A

SCALE: 1" = 10'

STA 1468+18 THROUGH 1485+70
STA 1489+27 THROUGH 1518+30
STA 1525+44 THROUGH 1580+87
STA 1587+31 THROUGH 1593+34

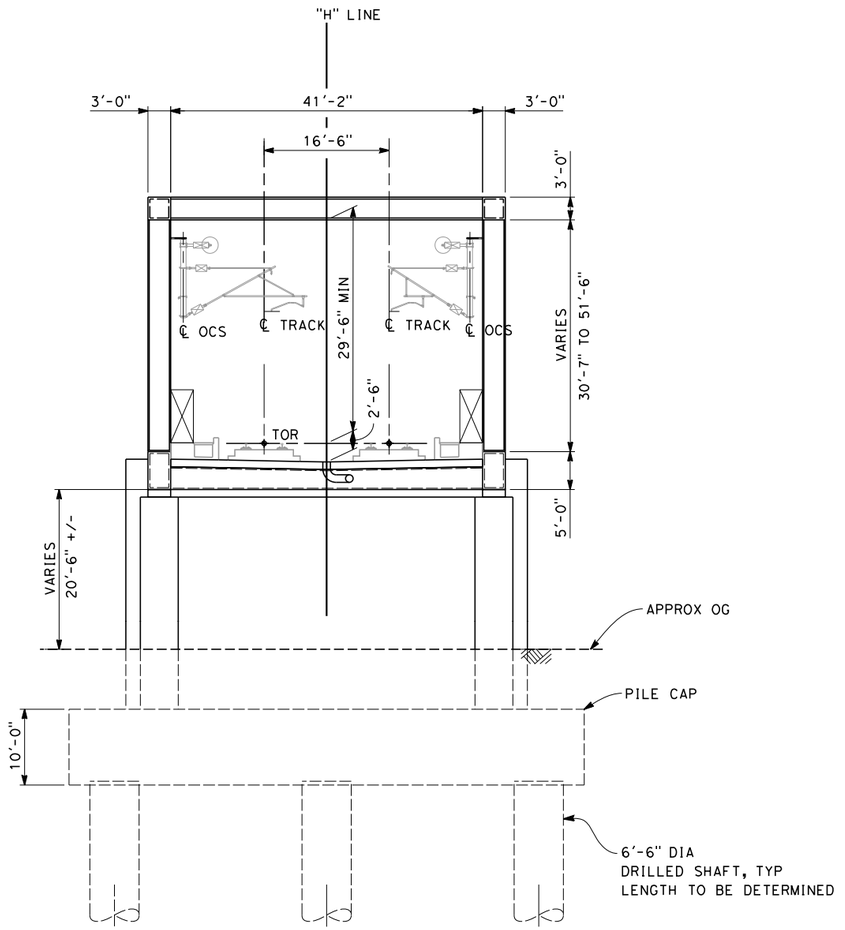


## SECTION B

SCALE: 1" = 10'

STA 1463+48 (BENT 2)
STA 1466+96 (BENT 3)
STA 1596+52 (ABUT 90)

10 0 10 20
1"-10'

| REV | DATE | BY | CHK | APP | DESCRIPTION |
|---|---|---|---|---|---|

DESIGNED BY M. FISHER
DRAWN BY F. PALERMO
CHECKED BY A. ARMSTRONG
IN CHARGE R. COFFIN
DATE 12/31/13

**RECORD SET 15% DESIGN SUBMISSION - NOT FOR CONSTRUCTION**

URS | HMM | ARUP
California High-Speed Train

CALIFORNIA HIGH-SPEED RAIL AUTHORITY

**CALIFORNIA HIGH-SPEED TRAIN PROJECT**
**FRESNO TO BAKERSFIELD**
HANFORD SUBSECTION
ALIGNMENT H
KINGS RIVER VIADUCT
TYPICAL SECTIONS

CONTRACT NO. HSR 06-0003
DRAWING NO. SV2274
SCALE AS SHOWN
SHEET NO. 17 OF 18

**04/02/2014 - RFP No.: HSR 13-57**

frank.palermo 12/23/2013 2:42:58 PM c:\pwworking\hmm\external\frank.palermo01-arup.com\d0128411\FB-SV-2274-H.dgn

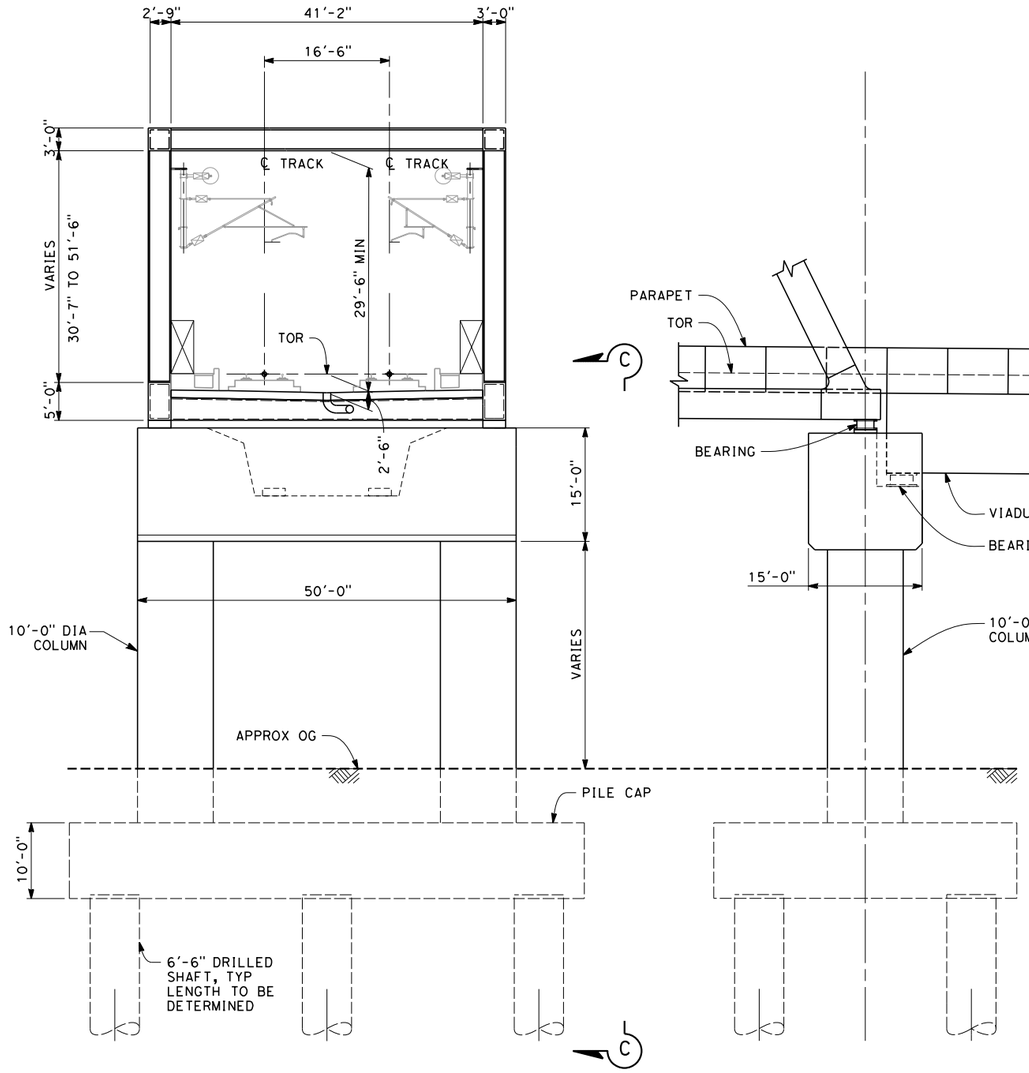


## SECTION C

SCALE: 1" = 10'

STA 1485+70 THROUGH 1489+27
STA 1518+30 THROUGH 1525+44
STA 1580+97 THROUGH 1587+31
STA 1593+34 THROUGH 1596+52

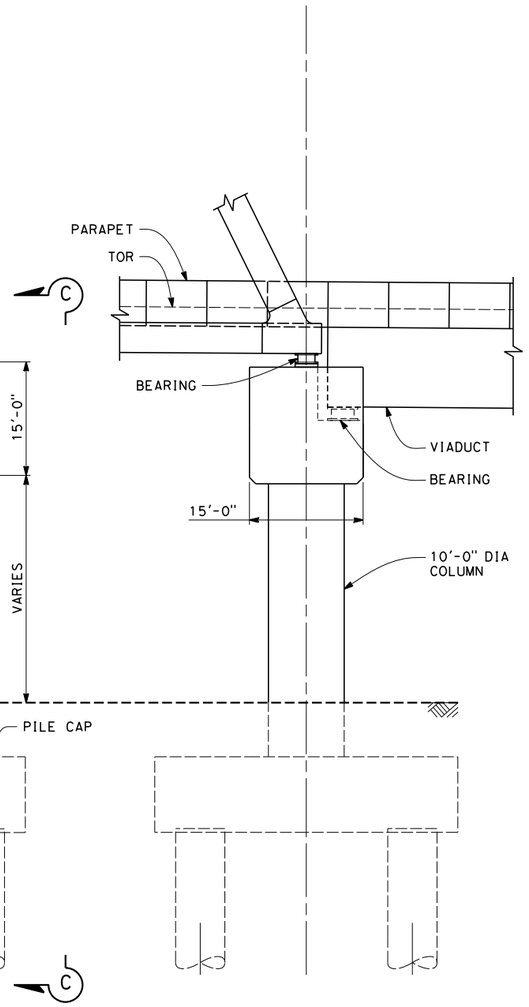


## SECTION C-C

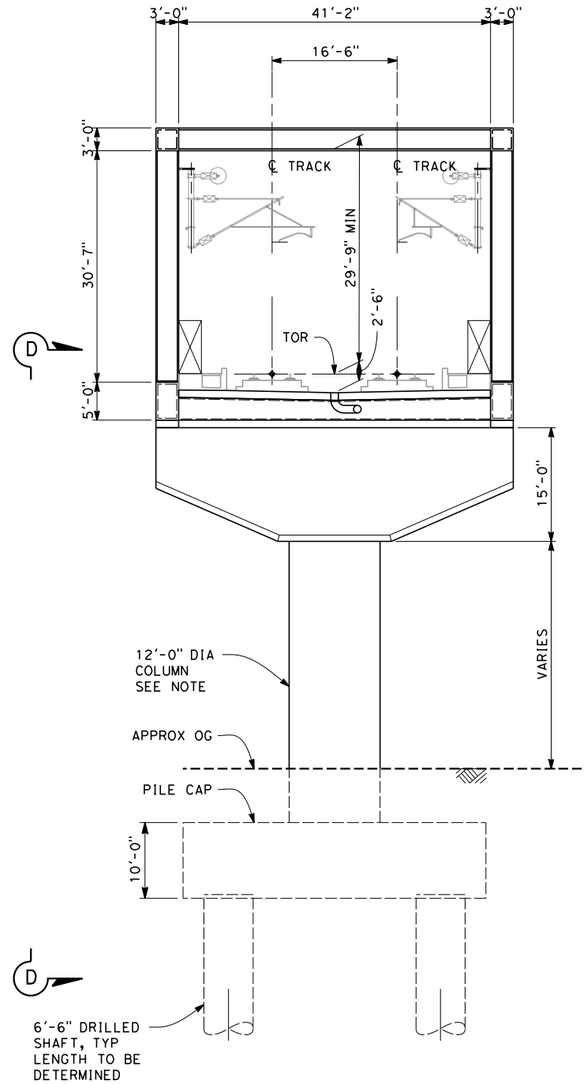


## SECTION D

SCALE: 1" = 10'

STA 1521+87 (BENT 33)
STA 1584+09 (BENT 83)

10 0 10 20
1"-10'

04/02/2014 - RFP No.: HSR 13-57

| REV | DATE | BY | CHK | APP | DESCRIPTION |
|---|---|---|---|---|---|

DESIGNED BY M. FISHER
DRAWN BY F. PALERMO
CHECKED BY A. ARMSTRONG
IN CHARGE R. COFFIN
DATE 12/31/13

RECORD SET 15% DESIGN SUBMISSION - NOT FOR CONSTRUCTION

URS | HMM | ARUP
CALIFORNIA HIGH-SPEED TRAIN

CALIFORNIA
HIGH-SPEED RAIL AUTHORITY

**CALIFORNIA HIGH-SPEED TRAIN PROJECT**
**FRESNO TO BAKERSFIELD**
HANFORD SUBSECTION
ALIGNMENT H
KINGS RIVER VIADUCT
TYPICAL SECTIONS

CONTRACT NO. HSR 06-0003
DRAWING NO. SV2275
SCALE AS SHOWN
SHEET NO. 18 OF 18

frank.palermo 12/23/2013 2:43:03 PM c:\pwworking\hmm\external\frank.palermo01-arup.com\d0128411\FB-SV-2275-H.dgn

| REV | DATE | BY | CHK | APP | DESCRIPTION |
|---|---|---|---|---|---|

DESIGNED BY Y. REN
DRAWN BY E. SUDHAUSEN
CHECKED BY A. ARMSTRONG
IN CHARGE R. COFFIN
DATE 12/31/13

**RECORD SET 15% DESIGN SUBMISSION - NOT FOR CONSTRUCTION**

URS | HMM | ARUP
CALIFORNIA HIGH-SPEED TRAIN

CALIFORNIA
HIGH-SPEED RAIL AUTHORITY

# CALIFORNIA HIGH-SPEED TRAIN PROJECT
## FRESNO TO BAKERSFIELD
HANFORD SUBSECTION
ALIGNMENT H
HANFORD VIADUCT
KEY MAP

CONTRACT NO. HSR 06-0003
DRAWING NO. SV2300
SCALE AS SHOWN
SHEET NO. 1 OF 14

04/02/2014 - RFP No.: HSR 13-57

frank.palermo 12/23/2013 2:44:46 PM c:\pwworking\hmm\external\frank.palermo01-arup.com\d0128411\X-FB-SV-2300-H-X.dgn

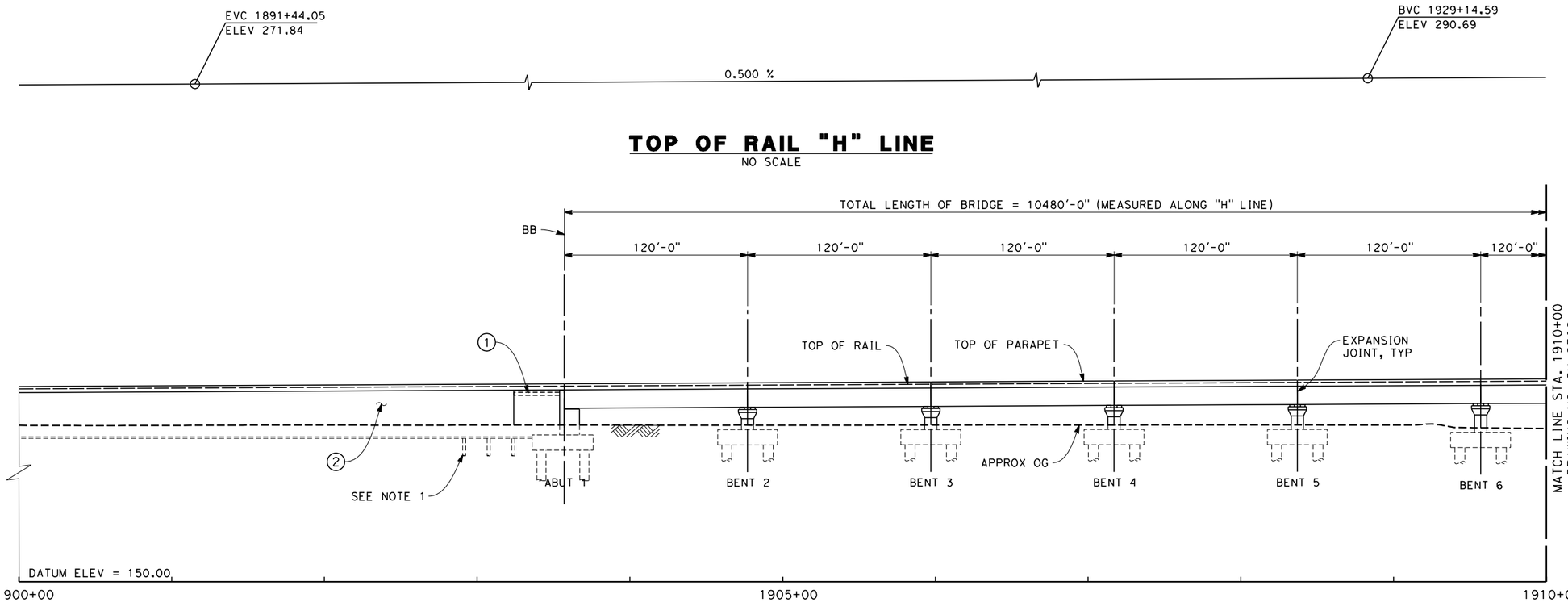


NOTES

1. NOT ALL PILES SHOWN
2. PILE LENGTH TO BE DETERMINED
3. SUPERSTRUCTURE CONSTRUCTION, UON
   SIMPLE SPANS - MSS OR FLPM
   CONTINUOUS SPANS - BCC - PRECAST IN-SITU
   STEEL TRUSS - INSITU, SLID OR LAUNCHED
   ELEVATED SLABS - PC BEAM AND INSITU SLAB
4. UTILITY LOCATIONS TO BE DETERMINED
5. ACCESS STAIRWAYS ARE PROVIDED AT SYSTEMS SITES (APPROX. 2.5 MILE INTERVALS). LADDER ACCESS TO VIADUCTS IS PROVIDED AT 2500 FT INTERVALS WITH ACCESS ROAD AND TURNING CIRCLE WHERE NECESSARY.

LEGEND:

(1) STRUCTURE APPROACH SLAB

(2) RETAINING WALL

* ESTIMATED 100-YEAR FLOOD ELEVATION, SEE "FRESNO TO BAKERSFIELD CORRIDOR HYDROLOGY, HYDRAULICS AND DRAINAGE 15% DRAFT REPORT".

40 0 40 80
1"=40'

04/02/2014 - RFP No.: HSR 13-57

| REV | DATE | BY | CHK | APP | DESCRIPTION |
|---|---|---|---|---|---|

DESIGNED BY M. FISHER
DRAWN BY F. PALERMO
CHECKED BY A. ARMSTRONG
IN CHARGE R. COFFIN
DATE 12/31/13

**RECORD SET 15% DESIGN SUBMISSION - NOT FOR CONSTRUCTION**

URS | HMM | ARUP
CALIFORNIA HIGH-SPEED TRAIN

CALIFORNIA HIGH-SPEED RAIL AUTHORITY

**CALIFORNIA HIGH-SPEED TRAIN PROJECT**
**FRESNO TO BAKERSFIELD**
HANFORD SUBSECTION
ALIGNMENT H
HANFORD VIADUCT
PLAN AND ELEVATION

CONTRACT NO. HSR 06-0003
DRAWING NO. SV2301
SCALE AS SHOWN
SHEET NO. 2 OF 14

frank.palermo 12/23/2013 2:45:25 PM c:\pwworking\hmm\external\frank.palermo01-arup.com\d0128411\X-FB-SV-2301-H-X.dgn

## TOP OF RAIL "H" LINE

NO SCALE

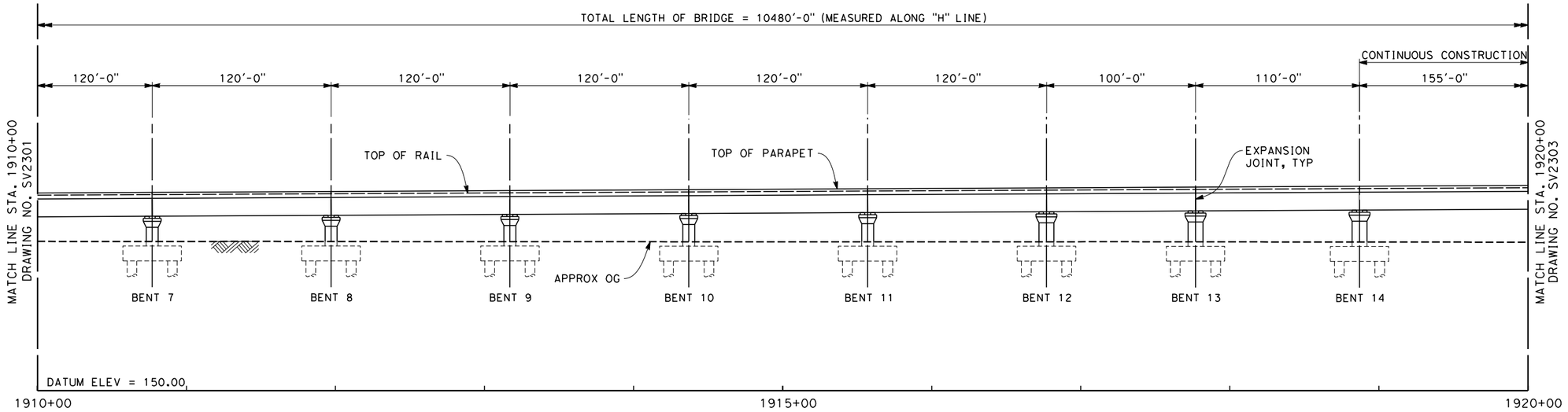


## ELEVATION

SCALE 1" = 40'

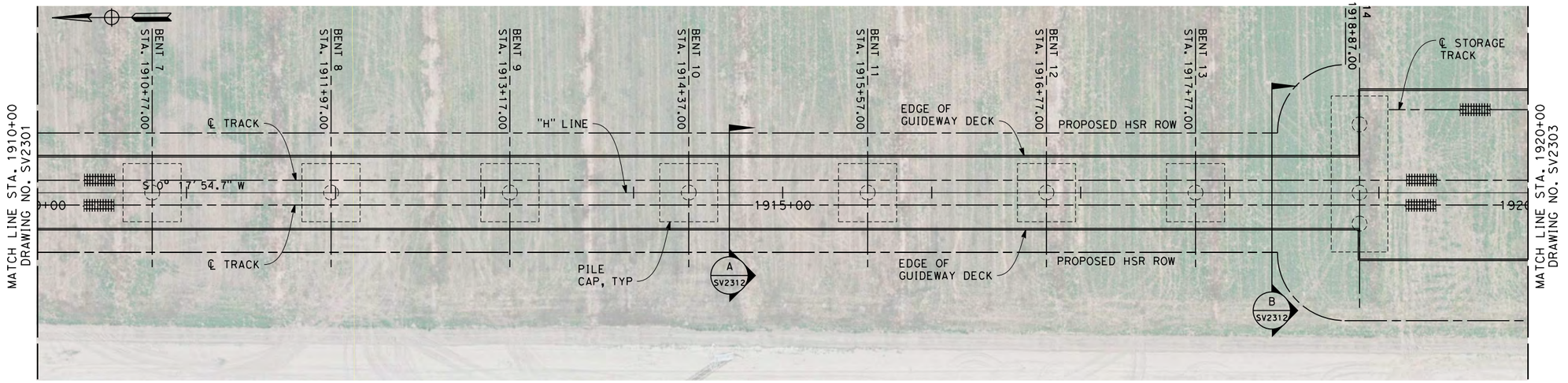


## PLAN

SCALE 1" = 40'

NOTES

1. NOT ALL PILES SHOWN
2. PILE LENGTH TO BE DETERMINED
3. SUPERSTRUCTURE CONSTRUCTION, UON
   SIMPLE SPANS - MSS OR FLPM
   CONTINUOUS SPANS - BCC - PRECAST IN-SITU
   STEEL TRUSS - INSITU, SLID OR LAUNCHED
   ELEVATED SLABS - PC BEAM AND INSITU SLAB
4. UTILITY LOCATIONS TO BE DETERMINED
5. ACCESS STAIRWAYS ARE PROVIDED AT SYSTEMS SITES (APPROX. 2.5 MILE INTERVALS). LADDER ACCESS TO VIADUCTS IS PROVIDED AT 2500 FT INTERVALS WITH ACCESS ROAD AND TURNING CIRCLE WHERE NECESSARY.

LEGEND:

(1) STRUCTURE APPROACH SLAB

(2) RETAINING WALL

* ESTIMATED 100-YEAR FLOOD ELEVATION, SEE "FRESNO TO BAKERSFIELD CORRIDOR HYDROLOGY, HYDRAULICS AND DRAINAGE 15% DRAFT REPORT".

40 0 40 80

1"=40'

04/02/2014 - RFP No.: HSR 13-57

| REV | DATE | BY | CHK | APP | DESCRIPTION |
|---|---|---|---|---|---|

DESIGNED BY M. FISHER
DRAWN BY F. PALERMO
CHECKED BY A. ARMSTRONG
IN CHARGE R. COFFIN
DATE 12/31/13

**RECORD SET 15% DESIGN SUBMISSION - NOT FOR CONSTRUCTION**

URS | HMM | ARUP
CALIFORNIA HIGH-SPEED TRAIN

CALIFORNIA HIGH-SPEED RAIL AUTHORITY

# CALIFORNIA HIGH-SPEED TRAIN PROJECT
# FRESNO TO BAKERSFIELD

HANFORD SUBSECTION
ALIGNMENT H
HANFORD VIADUCT
PLAN AND ELEVATION

CONTRACT NO. HSR 06-0003
DRAWING NO. SV2302
SCALE AS SHOWN
SHEET NO. 3 OF 14

frank.palermo 12/23/2013 2:45:42 PM c:\pwworking\hmm\external\frank.palermo01-arup.com\d0128411\X-FB-SV-2302-H-X.dgn

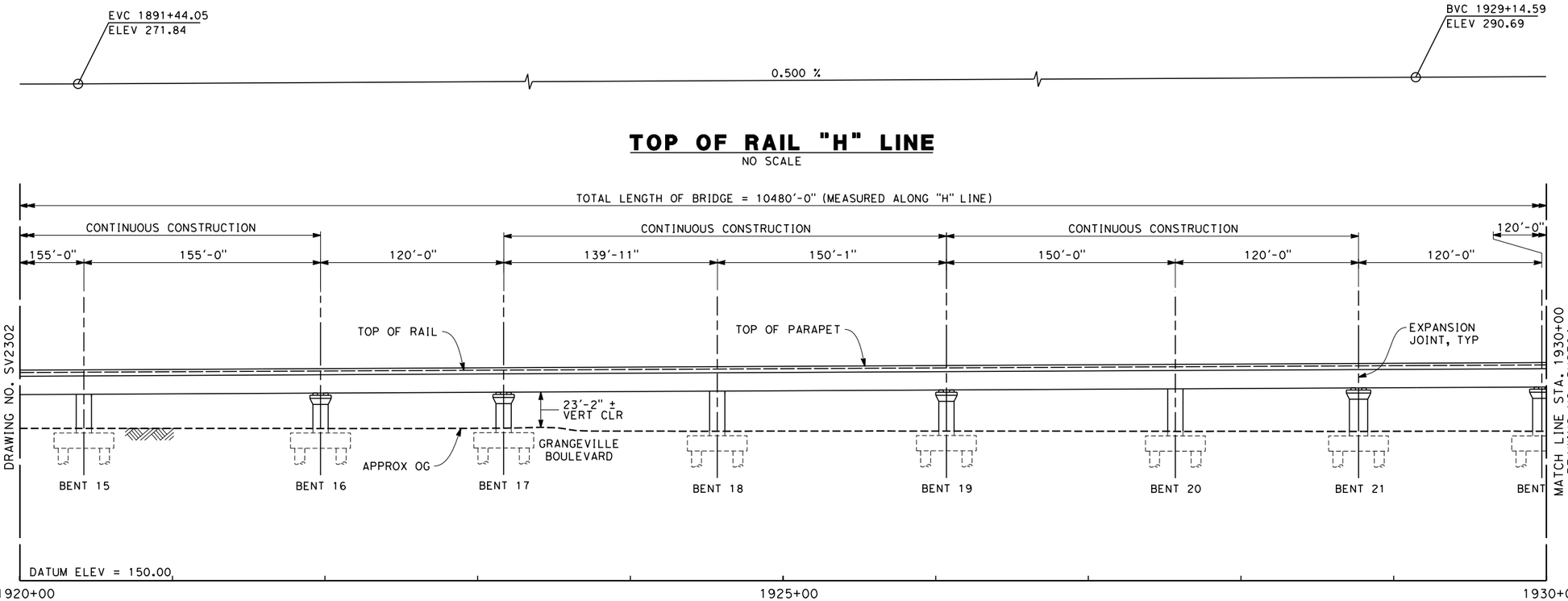


## TOP OF RAIL "H" LINE

NO SCALE

## ELEVATION

SCALE 1" = 40'

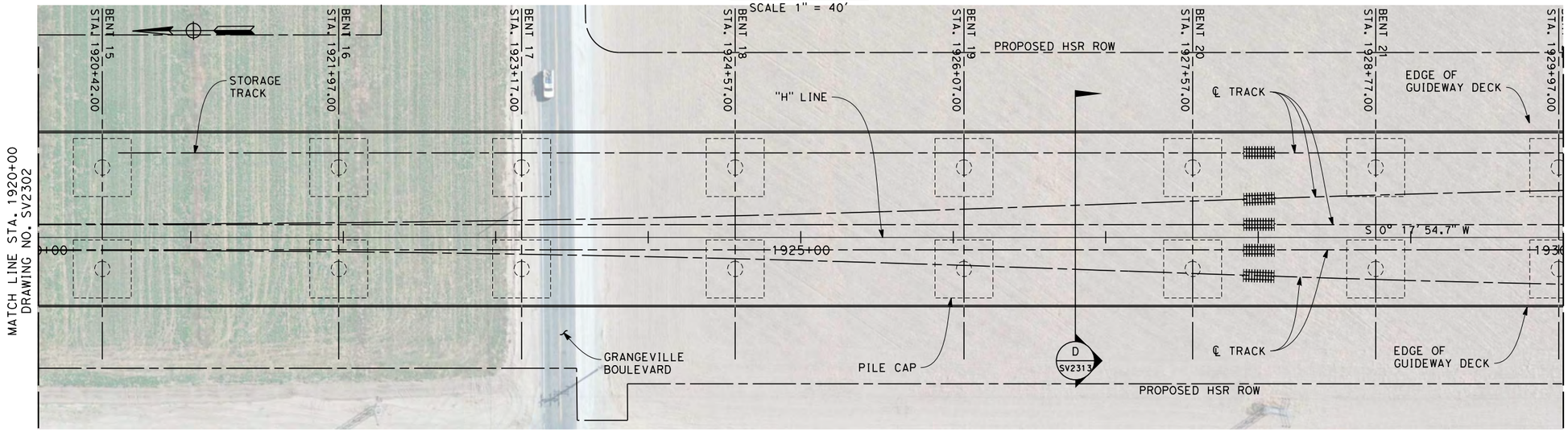


## PLAN

SCALE 1" = 40'

### NOTES

1. NOT ALL PILES SHOWN
2. PILE LENGTH TO BE DETERMINED
3. SUPERSTRUCTURE CONSTRUCTION, UON
   SIMPLE SPANS - MSS OR FLPM
   CONTINUOUS SPANS - BCC - PRECAST IN-SITU
   STEEL TRUSS - INSITU, SLID OR LAUNCHED
   ELEVATED SLABS - PC BEAM AND INSITU SLAB
4. UTILITY LOCATIONS TO BE DETERMINED
5. ACCESS STAIRWAYS ARE PROVIDED AT SYSTEMS SITES (APPROX. 2.5 MILE INTERVALS). LADDER ACCESS TO VIADUCTS IS PROVIDED AT 2500 FT INTERVALS WITH ACCESS ROAD AND TURNING CIRCLE WHERE NECESSARY.

LEGEND:

(1) STRUCTURE APPROACH SLAB

(2) RETAINING WALL

* ESTIMATED 100-YEAR FLOOD ELEVATION, SEE "FRESNO TO BAKERSFIELD CORRIDOR HYDROLOGY, HYDRAULICS AND DRAINAGE 15% DRAFT REPORT".

40 0 40 80
1"=40'

04/02/2014 - RFP No.: HSR 13-57

| REV | DATE | BY | CHK | APP | DESCRIPTION |
|---|---|---|---|---|---|

DESIGNED BY M. FISHER
DRAWN BY F. PALERMO
CHECKED BY A. ARMSTRONG
IN CHARGE R. COFFIN
DATE 12/31/13

**RECORD SET 15% DESIGN SUBMISSION - NOT FOR CONSTRUCTION**

URS | HMM | ARUP
CALIFORNIA HIGH-SPEED TRAIN

CALIFORNIA HIGH-SPEED RAIL AUTHORITY

**CALIFORNIA HIGH-SPEED TRAIN PROJECT**
**FRESNO TO BAKERSFIELD**
HANFORD SUBSECTION
ALIGNMENT H
HANFORD VIADUCT
PLAN AND ELEVATION

CONTRACT NO. HSR 06-0003
DRAWING NO. SV2303
SCALE AS SHOWN
SHEET NO. 4 OF 14

frank.palermo 12/23/2013 2:46:01 PM c:\pwworking\hmm\external\frank.palermo01-arup.com\d0128411\X-FB-SV-2303-H-X.dgn

## TOP OF RAIL "H" LINE

NO SCALE

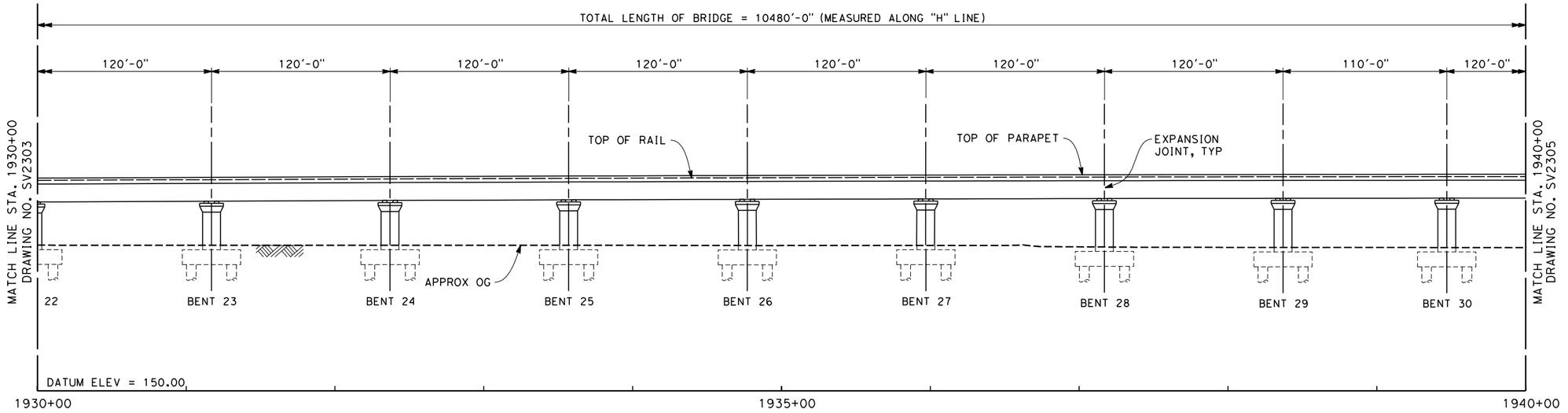


## ELEVATION

SCALE 1" = 40'

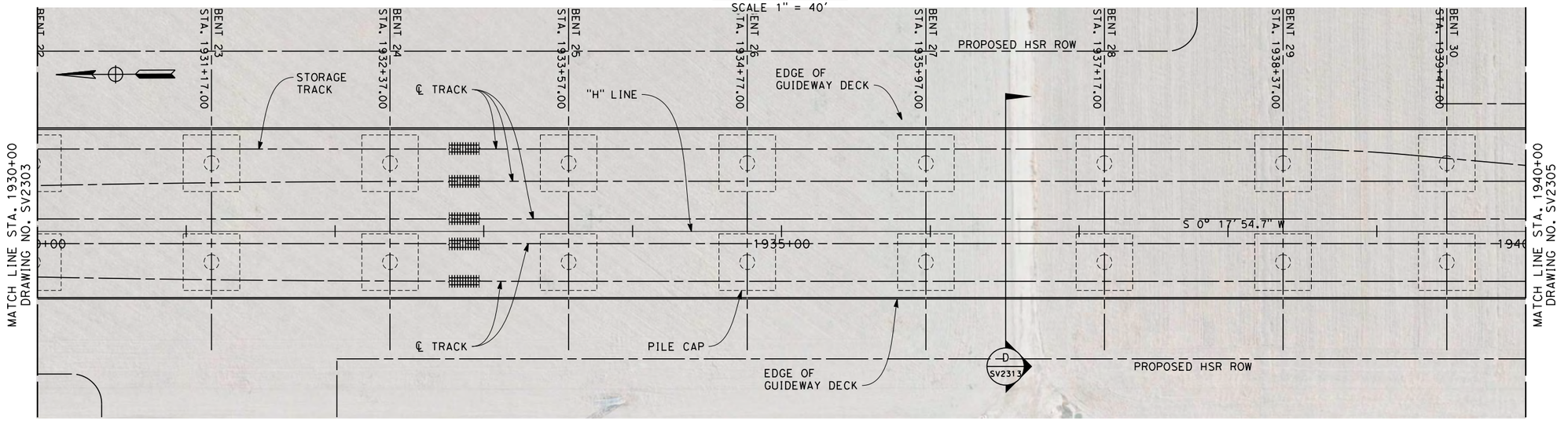


## PLAN

SCALE 1" = 40'

NOTES

1. NOT ALL PILES SHOWN
2. PILE LENGTH TO BE DETERMINED
3. SUPERSTRUCTURE CONSTRUCTION, UON
   SIMPLE SPANS - MSS OR FLPM
   CONTINUOUS SPANS - BCC - PRECAST IN-SITU
   STEEL TRUSS - INSITU, SLID OR LAUNCHED
   ELEVATED SLABS - PC BEAM AND INSITU SLAB
4. UTILITY LOCATIONS TO BE DETERMINED
5. ACCESS STAIRWAYS ARE PROVIDED AT SYSTEMS SITES (APPROX. 2.5 MILE INTERVALS). LADDER ACCESS TO VIADUCTS IS PROVIDED AT 2500 FT INTERVALS WITH ACCESS ROAD AND TURNING CIRCLE WHERE NECESSARY.

LEGEND:

(1) STRUCTURE APPROACH SLAB

(2) RETAINING WALL

* ESTIMATED 100-YEAR FLOOD ELEVATION, SEE "FRESNO TO BAKERSFIELD CORRIDOR HYDROLOGY, HYDRAULICS AND DRAINAGE 15% DRAFT REPORT".

40 0 40 80

1"=40'

04/02/2014 - RFP No.: HSR 13-57

| REV | DATE | BY | CHK | APP | DESCRIPTION |
|---|---|---|---|---|---|

DESIGNED BY M. FISHER
DRAWN BY F. PALERMO
CHECKED BY A. ARMSTRONG
IN CHARGE R. COFFIN
DATE 12/31/13

**RECORD SET 15% DESIGN SUBMISSION - NOT FOR CONSTRUCTION**

URS | HMM | ARUP
CALIFORNIA HIGH-SPEED TRAIN

CALIFORNIA
HIGH-SPEED RAIL AUTHORITY

**CALIFORNIA HIGH-SPEED TRAIN PROJECT**
**FRESNO TO BAKERSFIELD**
HANFORD SUBSECTION
ALIGNMENT H
HANFORD VIADUCT
PLAN AND ELEVATION

CONTRACT NO. HSR 06-0003
DRAWING NO. SV2304
SCALE AS SHOWN
SHEET NO. 5 OF 14

frank.palermo 12/23/2013 2:46:16 PM c:\pwworking\hmm\external\frank.palermo01-arup.com\d0128411\X-FB-SV-2304-H-X.dgn

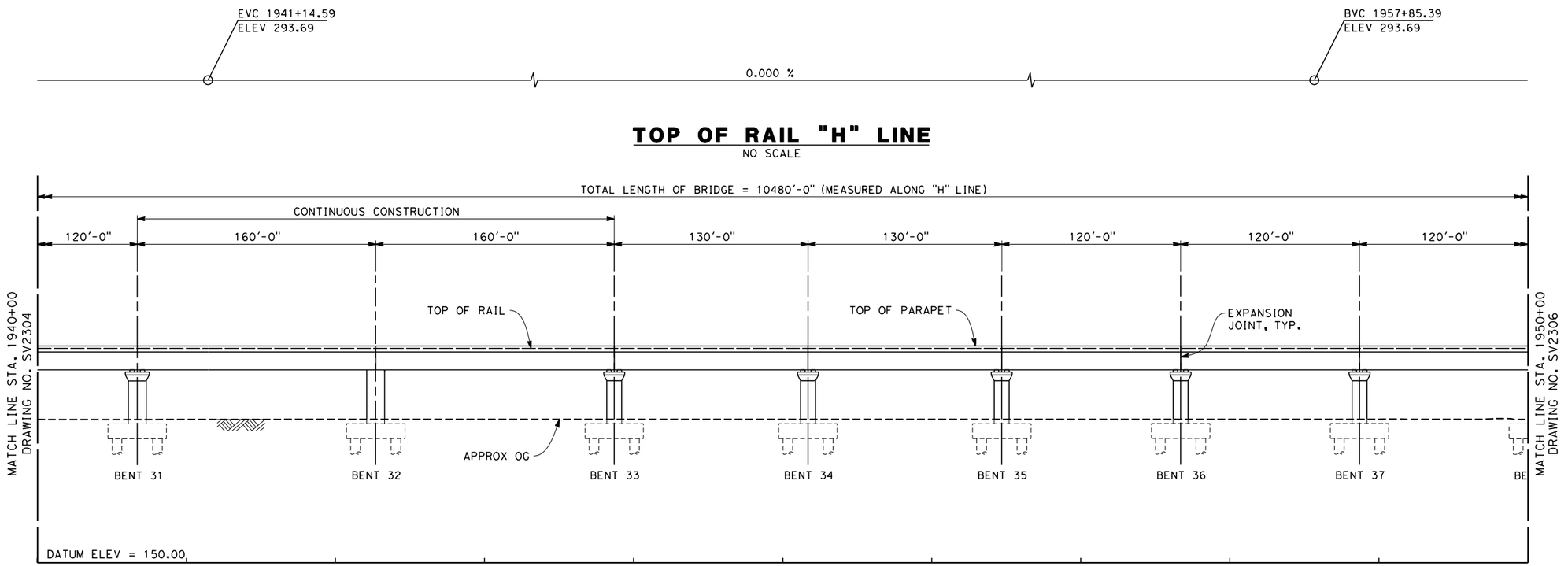


## TOP OF RAIL "H" LINE

NO SCALE

## ELEVATION

SCALE 1" = 40'

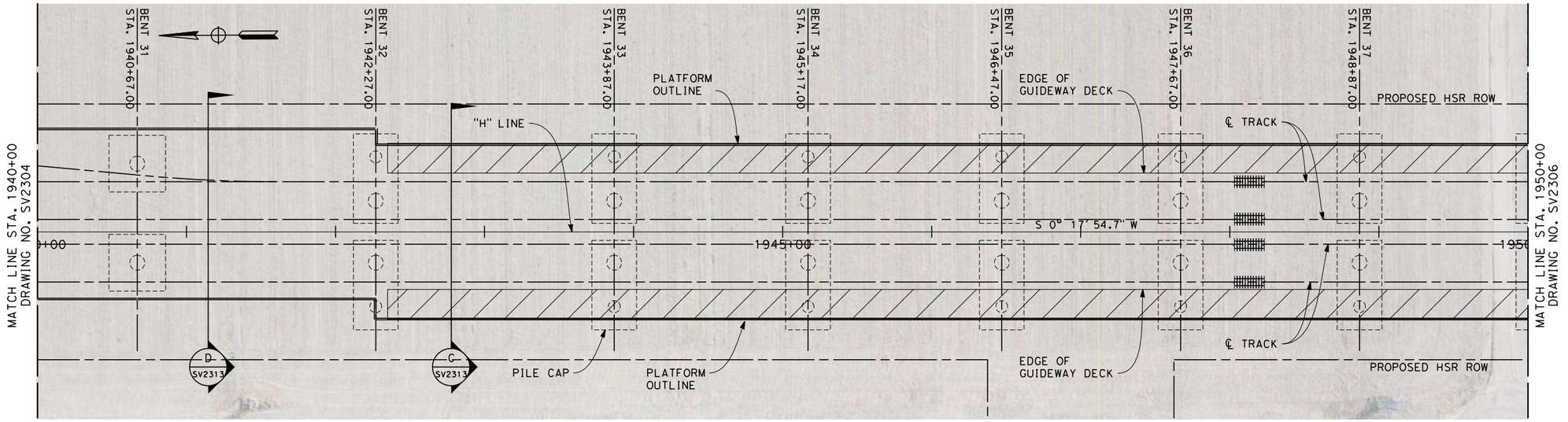


## PLAN

SCALE 1" = 40'

NOTES

1. NOT ALL PILES SHOWN
2. PILE LENGTH TO BE DETERMINED
3. SUPERSTRUCTURE CONSTRUCTION, UON
   SIMPLE SPANS - MSS OR FLPM
   CONTINUOUS SPANS - BCC - PRECAST IN-SITU
   STEEL TRUSS - INSITU, SLID OR LAUNCHED
   ELEVATED SLABS - PC BEAM AND INSITU SLAB
4. UTILITY LOCATIONS TO BE DETERMINED
5. ACCESS STAIRWAYS ARE PROVIDED AT SYSTEMS SITES (APPROX. 2.5 MILE INTERVALS). LADDER ACCESS TO VIADUCTS IS PROVIDED AT 2500 FT INTERVALS WITH ACCESS ROAD AND TURNING CIRCLE WHERE NECESSARY.

LEGEND:

(1) STRUCTURE APPROACH SLAB

(2) RETAINING WALL

* ESTIMATED 100-YEAR FLOOD ELEVATION, SEE "FRESNO TO BAKERSFIELD CORRIDOR HYDROLOGY, HYDRAULICS AND DRAINAGE 15% DRAFT REPORT".

40 0 40 80

1"=40'

04/02/2014 - RFP No.: HSR 13-57

| REV | DATE | BY | CHK | APP | DESCRIPTION |
|---|---|---|---|---|---|

DESIGNED BY M. FISHER
DRAWN BY F. PALERMO
CHECKED BY A. ARMSTRONG
IN CHARGE R. COFFIN
DATE 12/31/13

**RECORD SET 15% DESIGN SUBMISSION - NOT FOR CONSTRUCTION**

URS | HMM | ARUP
CALIFORNIA HIGH-SPEED TRAIN

CALIFORNIA HIGH-SPEED RAIL AUTHORITY

# CALIFORNIA HIGH-SPEED TRAIN PROJECT
# FRESNO TO BAKERSFIELD

HANFORD SUBSECTION
ALIGNMENT H
HANFORD VIADUCT
PLAN AND ELEVATION

CONTRACT NO. HSR 06-0003
DRAWING NO. SV2305
SCALE AS SHOWN
SHEET NO. 6 OF 14

frank.palermo 12/23/2013 2:46:31 PM c:\pwworking\hmm\external\frank.palermo01-arup.com\d0128411\X-FB-SV-2305-H-X.dgn

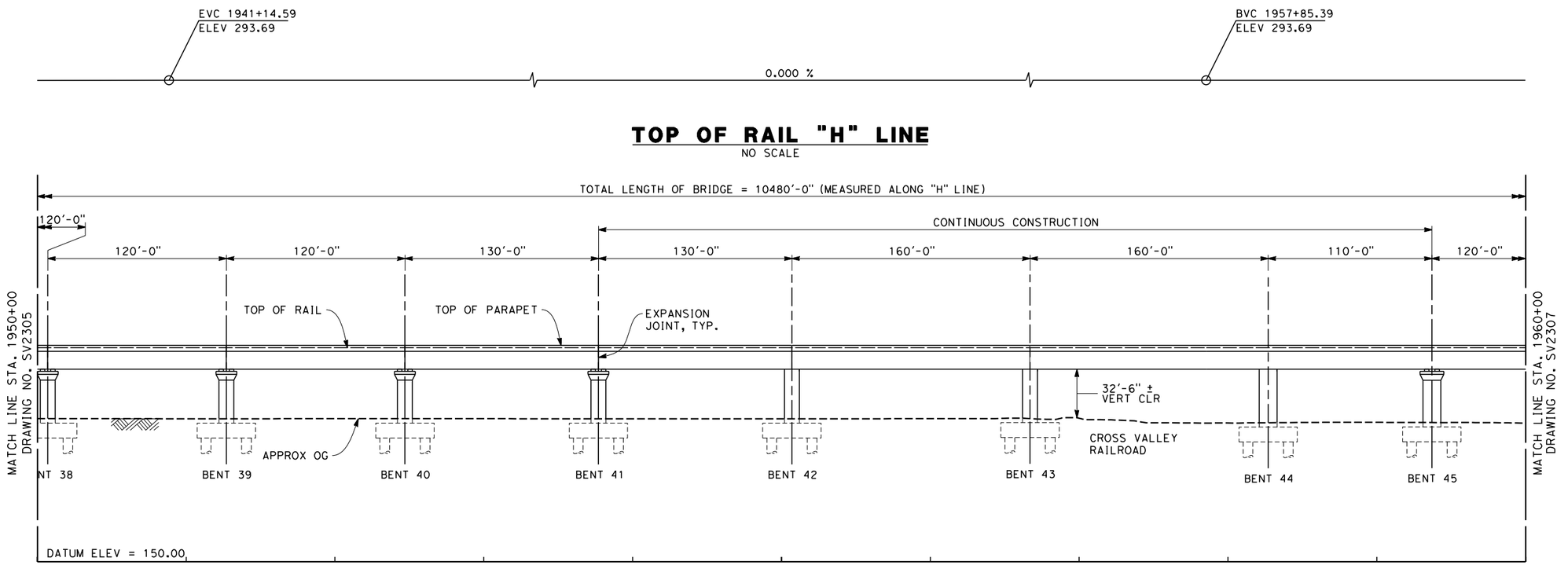


## TOP OF RAIL "H" LINE

NO SCALE

## ELEVATION

SCALE 1" = 40'

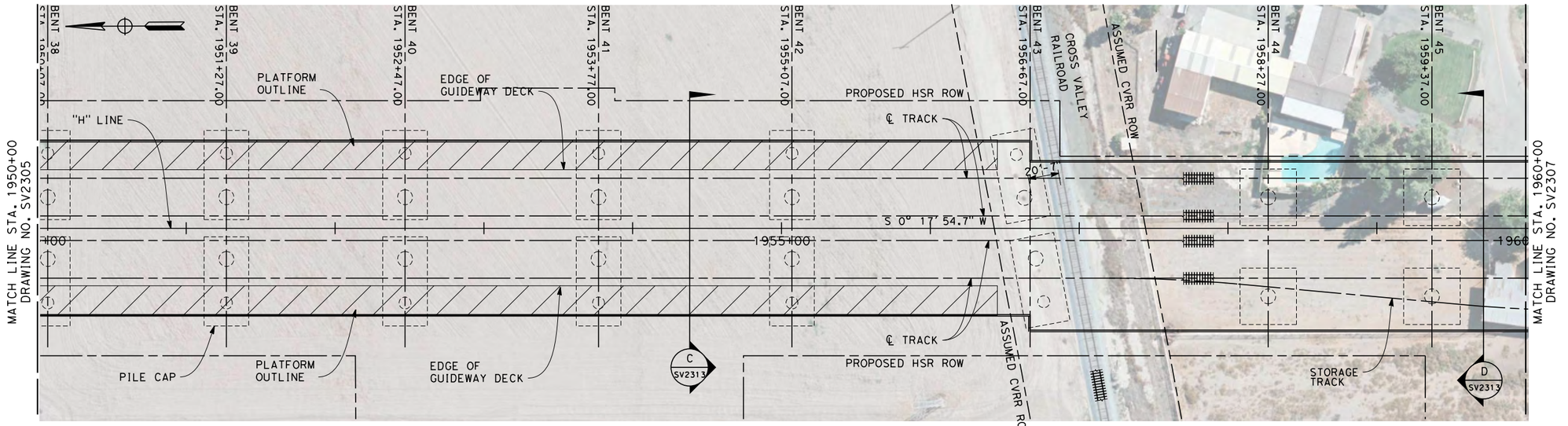


## PLAN

SCALE 1" = 40'

### NOTES

1. NOT ALL PILES SHOWN
2. PILE LENGTH TO BE DETERMINED
3. SUPERSTRUCTURE CONSTRUCTION, UON
   SIMPLE SPANS - MSS OR FLPM
   CONTINUOUS SPANS - BCC - PRECAST IN-SITU
   STEEL TRUSS - INSITU, SLID OR LAUNCHED
   ELEVATED SLABS - PC BEAM AND INSITU SLAB
4. UTILITY LOCATIONS TO BE DETERMINED
5. ACCESS STAIRWAYS ARE PROVIDED AT SYSTEMS SITES (APPROX. 2.5 MILE INTERVALS). LADDER ACCESS TO VIADUCTS IS PROVIDED AT 2500 FT INTERVALS WITH ACCESS ROAD AND TURNING CIRCLE WHERE NECESSARY.

LEGEND:

(1) STRUCTURE APPROACH SLAB

(2) RETAINING WALL

* ESTIMATED 100-YEAR FLOOD ELEVATION, SEE "FRESNO TO BAKERSFIELD CORRIDOR HYDROLOGY, HYDRAULICS AND DRAINAGE 15% DRAFT REPORT".

40 0 40 80
1"=40'

04/02/2014 - RFP No.: HSR 13-57

| REV | DATE | BY | CHK | APP | DESCRIPTION |
|---|---|---|---|---|---|
| | | | | | |

DESIGNED BY M. FISHER
DRAWN BY F. PALERMO
CHECKED BY A. ARMSTRONG
IN CHARGE R. COFFIN
DATE 12/31/13

**RECORD SET 15% DESIGN SUBMISSION - NOT FOR CONSTRUCTION**

URS | HMM | ARUP
CALIFORNIA HIGH-SPEED TRAIN

CALIFORNIA
HIGH-SPEED RAIL AUTHORITY

# CALIFORNIA HIGH-SPEED TRAIN PROJECT
# FRESNO TO BAKERSFIELD

HANFORD SUBSECTION
ALIGNMENT H
HANFORD VIADUCT
PLAN AND ELEVATION

CONTRACT NO. HSR 06-0003
DRAWING NO. SV2306
SCALE AS SHOWN
SHEET NO. 7 OF 14

frank.palermo 12/23/2013 2:46:48 PM c:\pwworking\hmm\external\frank.palermo01-arup.com\d0128411\X-FB-SV-2306-H-X.dgn

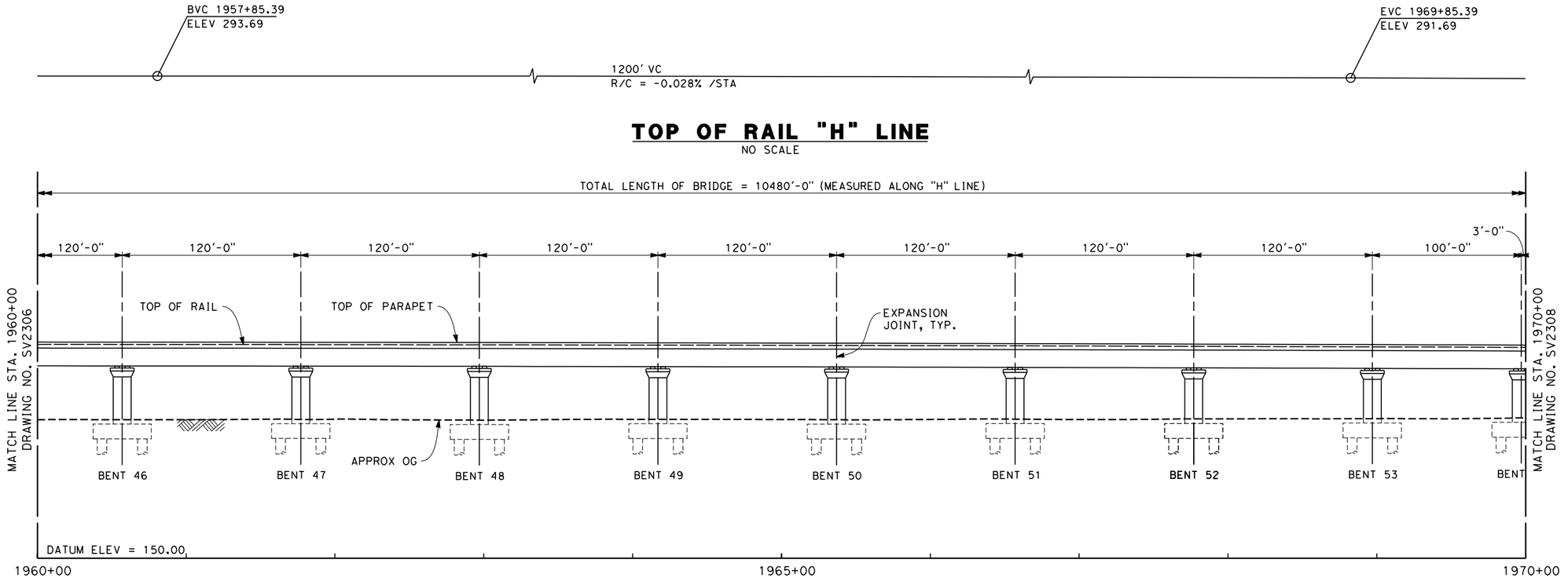


## TOP OF RAIL "H" LINE

NO SCALE

## ELEVATION

SCALE 1" = 40'

## PLAN

SCALE 1" = 40'

NOTES

1. NOT ALL PILES SHOWN
2. PILE LENGTH TO BE DETERMINED
3. SUPERSTRUCTURE CONSTRUCTION, UON
   SIMPLE SPANS - MSS OR FLPM
   CONTINUOUS SPANS - BCC - PRECAST IN-SITU
   STEEL TRUSS - INSITU, SLID OR LAUNCHED
   ELEVATED SLABS - PC BEAM AND INSITU SLAB
4. UTILITY LOCATIONS TO BE DETERMINED
5. ACCESS STAIRWAYS ARE PROVIDED AT SYSTEMS SITES (APPROX. 2.5 MILE INTERVALS). LADDER ACCESS TO VIADUCTS IS PROVIDED AT 2500 FT INTERVALS WITH ACCESS ROAD AND TURNING CIRCLE WHERE NECESSARY.

LEGEND:

(1) STRUCTURE APPROACH SLAB

(2) RETAINING WALL

* ESTIMATED 100-YEAR FLOOD ELEVATION, SEE "FRESNO TO BAKERSFIELD CORRIDOR HYDROLOGY, HYDRAULICS AND DRAINAGE 15% DRAFT REPORT".

40 0 40 80
1"=40'

04/02/2014 - RFP No.: HSR 13-57

| REV | DATE | BY | CHK | APP | DESCRIPTION |
|---|---|---|---|---|---|

DESIGNED BY M. FISHER
DRAWN BY F. PALERMO
CHECKED BY A. ARMSTRONG
IN CHARGE R. COFFIN
DATE 12/31/13

**RECORD SET 15% DESIGN SUBMISSION - NOT FOR CONSTRUCTION**

URS | HMM | ARUP
CALIFORNIA HIGH-SPEED TRAIN

CALIFORNIA HIGH-SPEED RAIL AUTHORITY

**CALIFORNIA HIGH-SPEED TRAIN PROJECT**
**FRESNO TO BAKERSFIELD**
HANFORD SUBSECTION
ALIGNMENT H
HANFORD VIADUCT
PLAN AND ELEVATION

CONTRACT NO. HSR 06-0003
DRAWING NO. SV2307
SCALE AS SHOWN
SHEET NO. 8 OF 14

frank.palermo 12/23/2013 2:47:05 PM c:\pwworking\hmm\external\frank.palermo01-arup.com\d0128411\X-FB-SV-2307-H-X.dgn

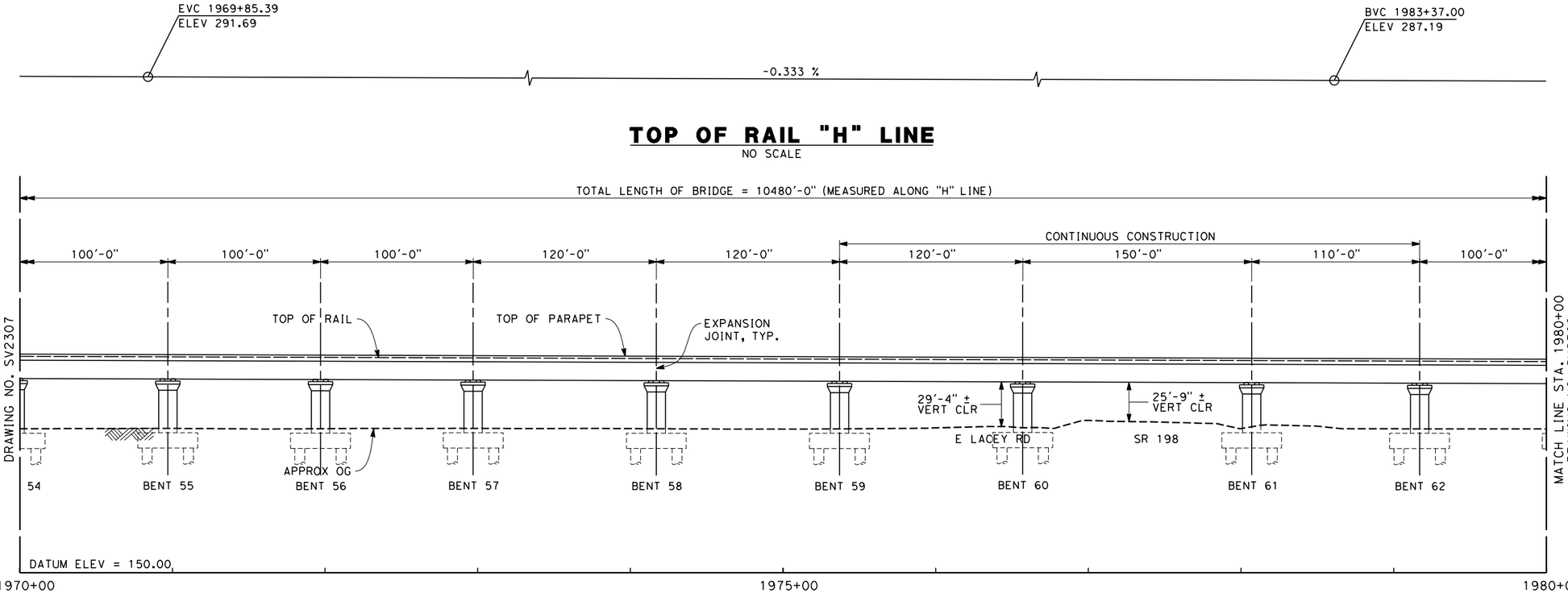


## TOP OF RAIL "H" LINE

NO SCALE

## ELEVATION

SCALE 1" = 40'

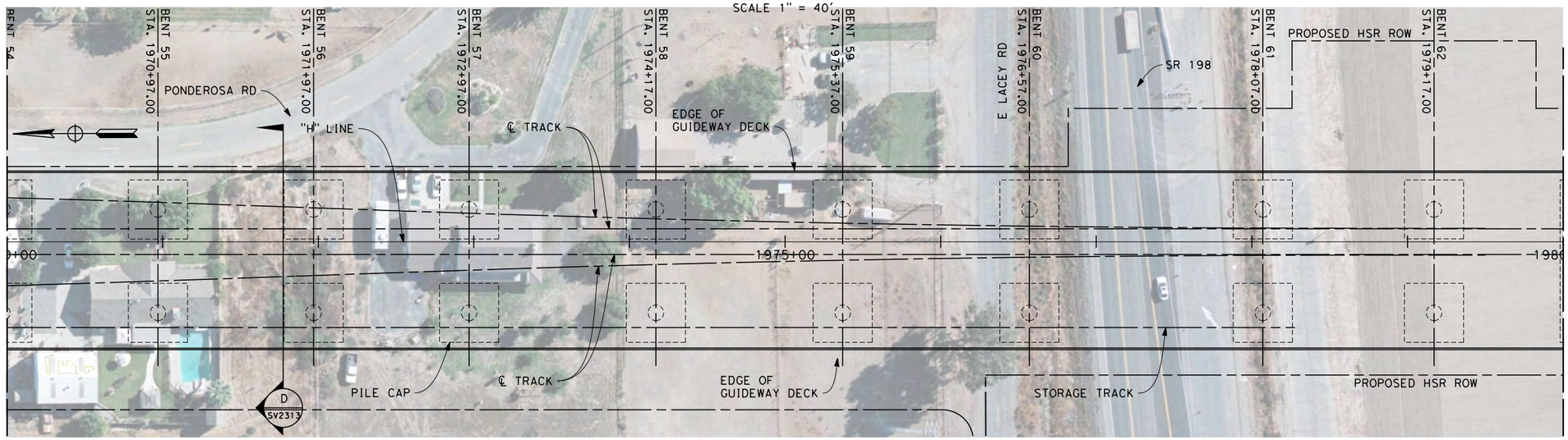


## PLAN

SCALE 1" = 40'

NOTES

1. NOT ALL PILES SHOWN
2. PILE LENGTH TO BE DETERMINED
3. SUPERSTRUCTURE CONSTRUCTION, UON
   SIMPLE SPANS - MSS OR FLPM
   CONTINUOUS SPANS - BCC - PRECAST IN-SITU
   STEEL TRUSS - INSITU, SLID OR LAUNCHED
   ELEVATED SLABS - PC BEAM AND INSITU SLAB
4. UTILITY LOCATIONS TO BE DETERMINED
5. ACCESS STAIRWAYS ARE PROVIDED AT SYSTEMS SITES (APPROX. 2.5 MILE INTERVALS). LADDER ACCESS TO VIADUCTS IS PROVIDED AT 2500 FT INTERVALS WITH ACCESS ROAD AND TURNING CIRCLE WHERE NECESSARY.

LEGEND:

(1) STRUCTURE APPROACH SLAB

(2) RETAINING WALL

* ESTIMATED 100-YEAR FLOOD ELEVATION, SEE "FRESNO TO BAKERSFIELD CORRIDOR HYDROLOGY, HYDRAULICS AND DRAINAGE 15% DRAFT REPORT".

40 0 40 80

1"=40'

04/02/2014 - RFP No.: HSR 13-57

| REV | DATE | BY | CHK | APP | DESCRIPTION |
|---|---|---|---|---|---|

DESIGNED BY M. FISHER
DRAWN BY F. PALERMO
CHECKED BY A. ARMSTRONG
IN CHARGE R. COFFIN
DATE 12/31/13

**RECORD SET 15% DESIGN SUBMISSION - NOT FOR CONSTRUCTION**

URS | HMM | ARUP
CALIFORNIA HIGH-SPEED TRAIN

CALIFORNIA HIGH-SPEED RAIL AUTHORITY

**CALIFORNIA HIGH-SPEED TRAIN PROJECT**
**FRESNO TO BAKERSFIELD**
HANFORD SUBSECTION
ALIGNMENT H
HANFORD VIADUCT
PLAN AND ELEVATION

CONTRACT NO. HSR 06-0003
DRAWING NO. SV2308
SCALE AS SHOWN
SHEET NO. 9 OF 14

frank.palermo 12/23/2013 2:47:30 PM c:\pwworking\hmm\external\frank.palermo01-arup.com\d0128411\X-FB-SV-2308-H-X.dgn

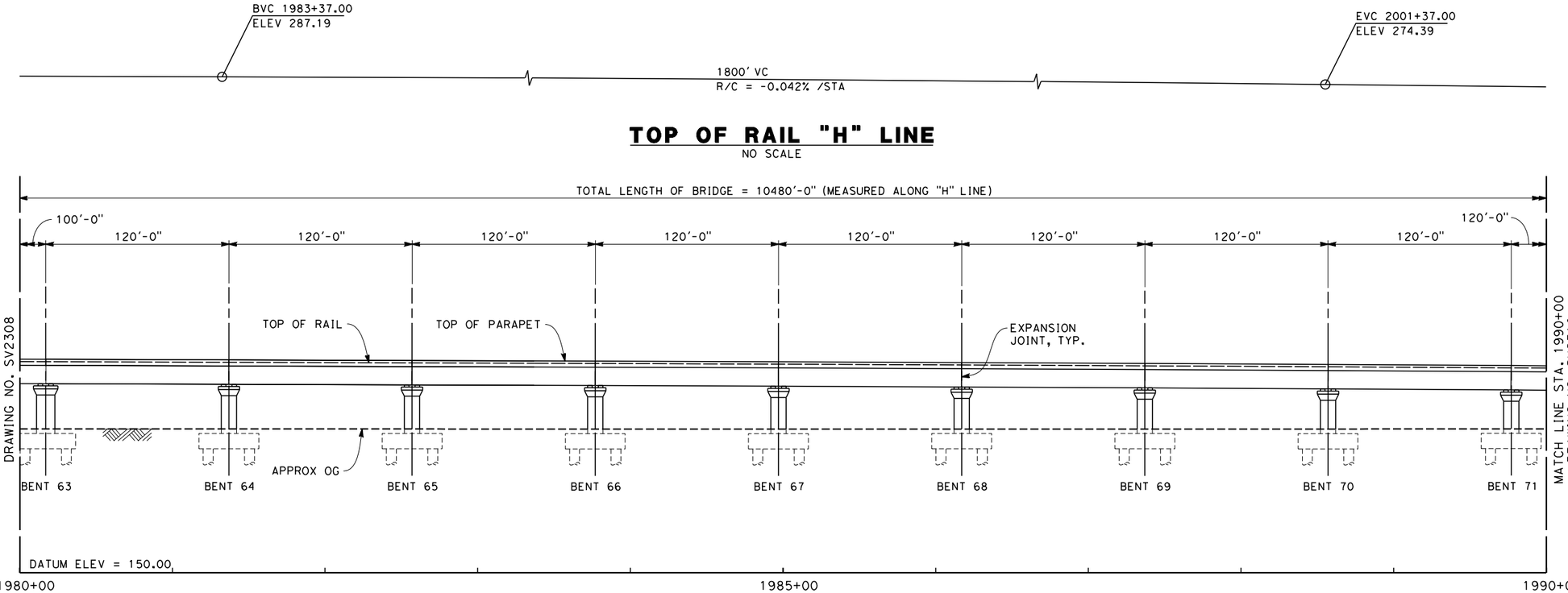


## TOP OF RAIL "H" LINE

NO SCALE

## ELEVATION

SCALE 1" = 40'

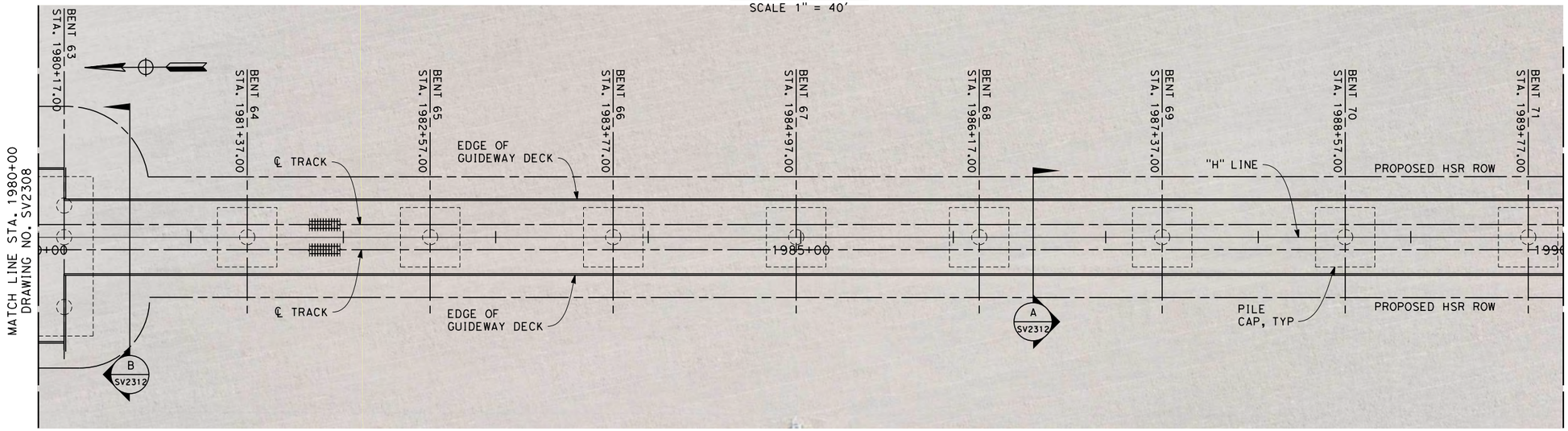


## PLAN

SCALE 1" = 40'

NOTES

1. NOT ALL PILES SHOWN
2. PILE LENGTH TO BE DETERMINED
3. SUPERSTRUCTURE CONSTRUCTION, UON
   SIMPLE SPANS - MSS OR FLPM
   CONTINUOUS SPANS - BCC - PRECAST IN-SITU
   STEEL TRUSS - INSITU, SLID OR LAUNCHED
   ELEVATED SLABS - PC BEAM AND INSITU SLAB
4. UTILITY LOCATIONS TO BE DETERMINED
5. ACCESS STAIRWAYS ARE PROVIDED AT SYSTEMS SITES (APPROX. 2.5 MILE INTERVALS). LADDER ACCESS TO VIADUCTS IS PROVIDED AT 2500 FT INTERVALS WITH ACCESS ROAD AND TURNING CIRCLE WHERE NECESSARY.

LEGEND:

(1) STRUCTURE APPROACH SLAB

(2) RETAINING WALL

* ESTIMATED 100-YEAR FLOOD ELEVATION, SEE "FRESNO TO BAKERSFIELD CORRIDOR HYDROLOGY, HYDRAULICS AND DRAINAGE 15% DRAFT REPORT".

40 0 40 80
1"=40'

04/02/2014 - RFP No.: HSR 13-57

| REV | DATE | BY | CHK | APP | DESCRIPTION |
|---|---|---|---|---|---|

DESIGNED BY M. FISHER
DRAWN BY F. PALERMO
CHECKED BY A. ARMSTRONG
IN CHARGE R. COFFIN
DATE 12/31/13

**RECORD SET 15% DESIGN SUBMISSION - NOT FOR CONSTRUCTION**

URS | HMM | ARUP
CALIFORNIA HIGH-SPEED TRAIN

CALIFORNIA HIGH-SPEED RAIL AUTHORITY

**CALIFORNIA HIGH-SPEED TRAIN PROJECT**
**FRESNO TO BAKERSFIELD**
HANFORD SUBSECTION
ALIGNMENT H
HANFORD VIADUCT
PLAN AND ELEVATION

CONTRACT NO. HSR 06-0003
DRAWING NO. SV2309
SCALE AS SHOWN
SHEET NO. 10 OF 14

frank.palermo 12/23/2013 2:47:52 PM c:\pwworking\hmm\external\frank.palermo01-arup.com\d0128411\X-FB-SV-2309-H-X.dgn

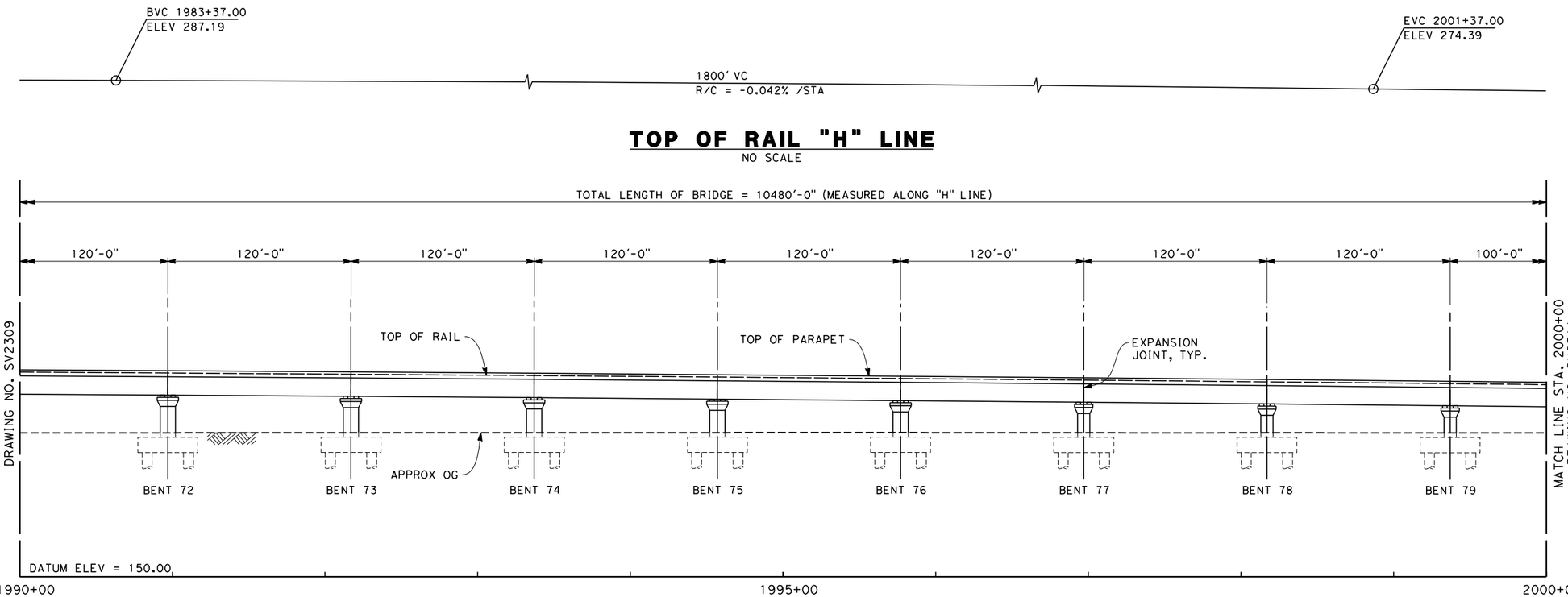


## TOP OF RAIL "H" LINE

NO SCALE

## ELEVATION

SCALE 1" = 40'

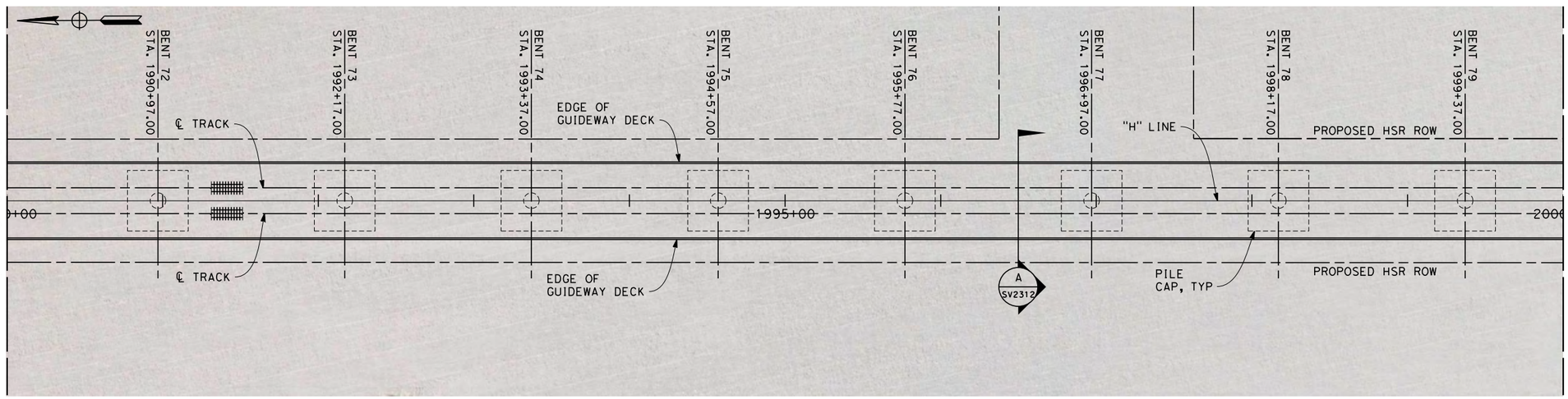


## PLAN

SCALE 1" = 40'

NOTES

1. NOT ALL PILES SHOWN
2. PILE LENGTH TO BE DETERMINED
3. SUPERSTRUCTURE CONSTRUCTION, UON
   SIMPLE SPANS - MSS OR FLPM
   CONTINUOUS SPANS - BCC - PRECAST IN-SITU
   STEEL TRUSS - INSITU, SLID OR LAUNCHED
   ELEVATED SLABS - PC BEAM AND INSITU SLAB
4. UTILITY LOCATIONS TO BE DETERMINED
5. ACCESS STAIRWAYS ARE PROVIDED AT SYSTEMS SITES (APPROX. 2.5 MILE INTERVALS). LADDER ACCESS TO VIADUCTS IS PROVIDED AT 2500 FT INTERVALS WITH ACCESS ROAD AND TURNING CIRCLE WHERE NECESSARY.

LEGEND:

(1) STRUCTURE APPROACH SLAB

(2) RETAINING WALL

* ESTIMATED 100-YEAR FLOOD ELEVATION, SEE "FRESNO TO BAKERSFIELD CORRIDOR HYDROLOGY, HYDRAULICS AND DRAINAGE 15% DRAFT REPORT".

40 0 40 80
1"=40'

04/02/2014 - RFP No.: HSR 13-57

| REV | DATE | BY | CHK | APP | DESCRIPTION |
|---|---|---|---|---|---|

DESIGNED BY M. FISHER
DRAWN BY F. PALERMO
CHECKED BY A. ARMSTRONG
IN CHARGE R. COFFIN
DATE 12/31/13

**RECORD SET 15% DESIGN SUBMISSION - NOT FOR CONSTRUCTION**

URS | HMM | ARUP
CALIFORNIA HIGH-SPEED TRAIN

CALIFORNIA
HIGH-SPEED RAIL AUTHORITY

**CALIFORNIA HIGH-SPEED TRAIN PROJECT**
**FRESNO TO BAKERSFIELD**
HANFORD SUBSECTION
ALIGNMENT H
HANFORD VIADUCT
PLAN AND ELEVATION

CONTRACT NO. HSR 06-0003
DRAWING NO. SV2310
SCALE AS SHOWN
SHEET NO. 11 OF 14

frank.palermo 12/23/2013 2:48:15 PM c:\pwworking\hmm\external\frank.palermo01-arup.com\d0128411\X-FB-SV-2310-H-X.dgn

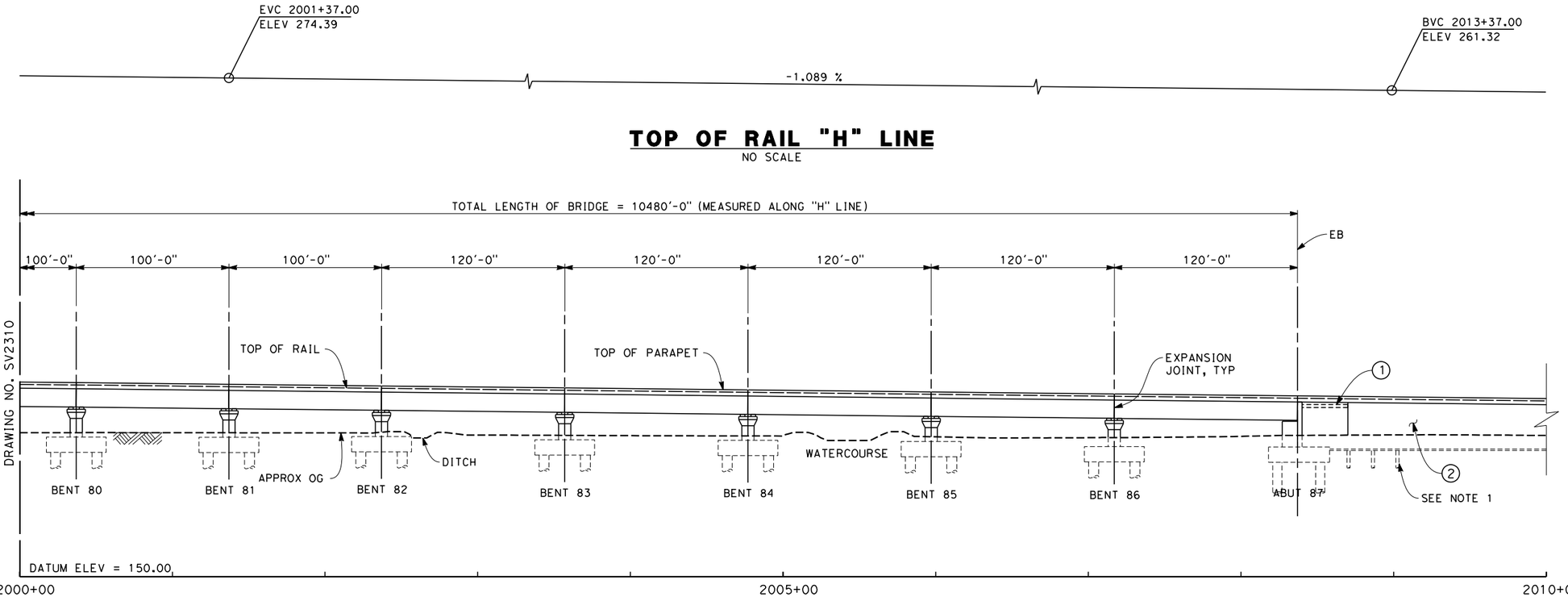


## TOP OF RAIL "H" LINE

NO SCALE

## ELEVATION

SCALE 1" = 40'

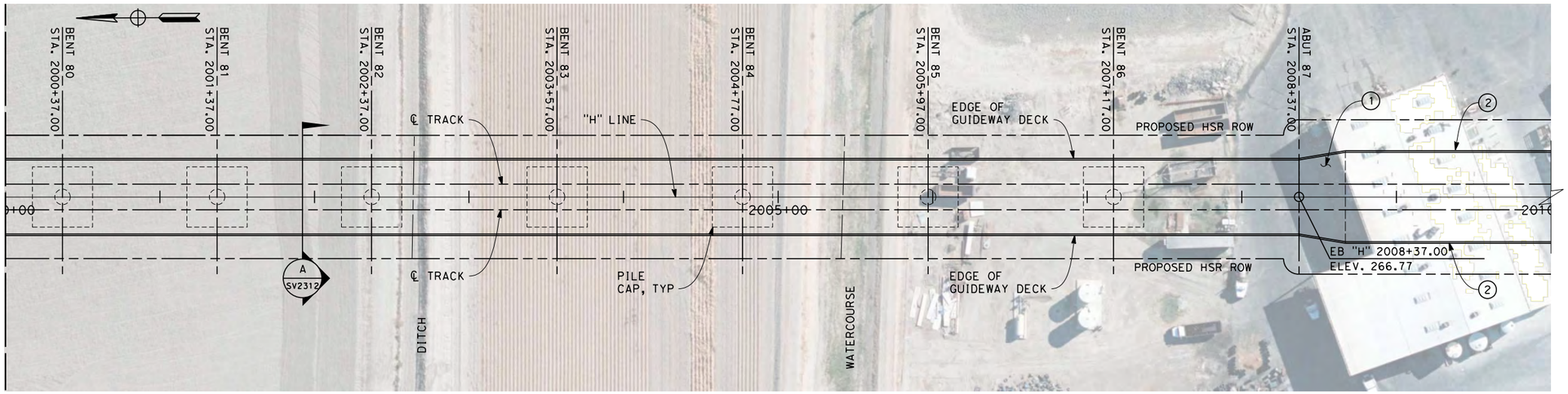


## PLAN

SCALE 1" = 40'

NOTES

1. NOT ALL PILES SHOWN
2. PILE LENGTH TO BE DETERMINED
3. SUPERSTRUCTURE CONSTRUCTION, UON
   SIMPLE SPANS - MSS OR FLPM
   CONTINUOUS SPANS - BCC - PRECAST IN-SITU
   STEEL TRUSS - INSITU, SLID OR LAUNCHED
   ELEVATED SLABS - PC BEAM AND INSITU SLAB
4. UTILITY LOCATIONS TO BE DETERMINED
5. ACCESS STAIRWAYS ARE PROVIDED AT SYSTEMS SITES (APPROX. 2.5 MILE INTERVALS). LADDER ACCESS TO VIADUCTS IS PROVIDED AT 2500 FT INTERVALS WITH ACCESS ROAD AND TURNING CIRCLE WHERE NECESSARY.

LEGEND:

1. STRUCTURE APPROACH SLAB
2. RETAINING WALL

* ESTIMATED 100-YEAR FLOOD ELEVATION, SEE "FRESNO TO BAKERSFIELD CORRIDOR HYDROLOGY, HYDRAULICS AND DRAINAGE 15% DRAFT REPORT".

40 0 40 80
1"=40'

04/02/2014 - RFP No.: HSR 13-57

| REV | DATE | BY | CHK | APP | DESCRIPTION |
|---|---|---|---|---|---|

DESIGNED BY M. FISHER
DRAWN BY F. PALERMO
CHECKED BY A. ARMSTRONG
IN CHARGE R. COFFIN
DATE 12/31/13

**RECORD SET 15% DESIGN SUBMISSION - NOT FOR CONSTRUCTION**

URS | HMM | ARUP
CALIFORNIA HIGH-SPEED TRAIN

CALIFORNIA HIGH-SPEED RAIL AUTHORITY

**CALIFORNIA HIGH-SPEED TRAIN PROJECT**
**FRESNO TO BAKERSFIELD**
HANFORD SUBSECTION
ALIGNMENT H
HANFORD VIADUCT
PLAN AND ELEVATION

CONTRACT NO. HSR 06-0003
DRAWING NO. SV2311
SCALE AS SHOWN
SHEET NO. 12 OF 14

frank.palermo 12/23/2013 2:48:36 PM c:\pwworking\hmm\external\frank.palermo01-arup.com\d0128411\X-FB-SV-2311-H-X.dgn

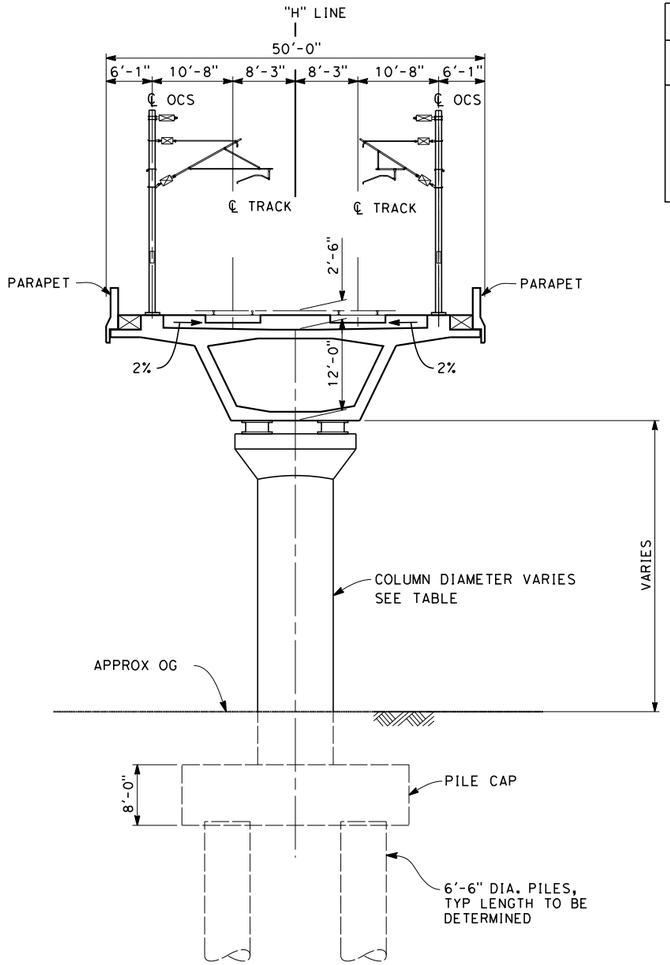


| COLUMN DIAMETERS | |
|---|---|
| COLUMN HEIGHT | DIAMETER |
| 0-20 | 8 FT |
| 20-40 | 10 FT |
| 40-50 | 12 FT |
| 50-60 | 15 FT |
| 60-80 | 20 FT |
| 80-100 | 25 FT |

## SECTION A

SCALE: 1" = 10'

STA 1903+57 THROUGH 1918+87
STA 1980+17 THROUGH 2008+37

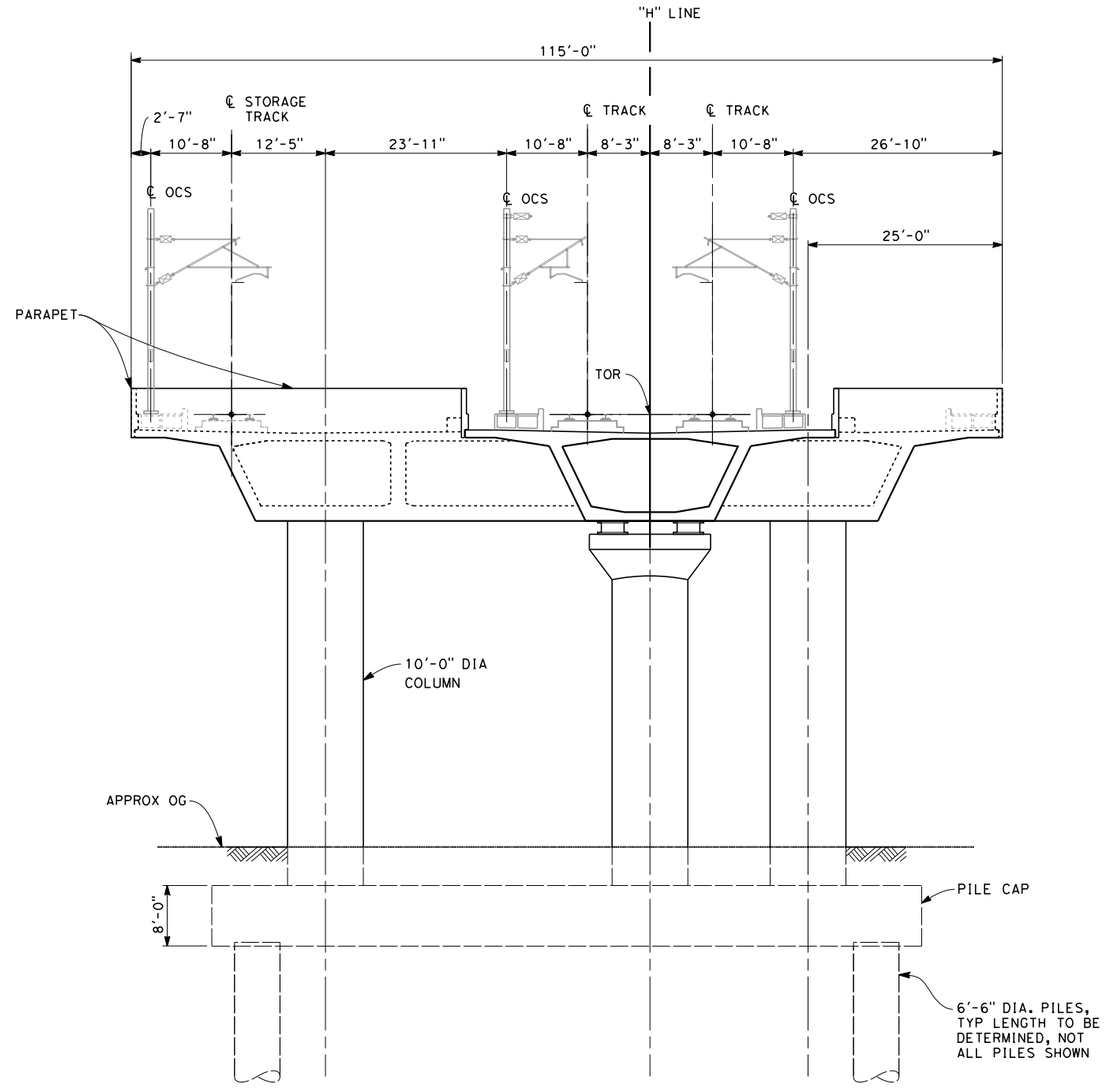


## SECTION B

SCALE: 1" = 10'

STA 1918+87 (BENT 14)
STA 1980+17 (BENT 61)

10 0 10 20
1"-10'

04/02/2014 - RFP No.: HSR 13-57

| REV | DATE | BY | CHK | APP | DESCRIPTION |
|---|---|---|---|---|---|

DESIGNED BY Y. REN
DRAWN BY F. PALERMO
CHECKED BY A. ARMSTRONG
IN CHARGE R. COFFIN
DATE 12/31/13

RECORD SET 15% DESIGN SUBMISSION - NOT FOR CONSTRUCTION

URS | HMM | ARUP
CALIFORNIA HIGH-SPEED TRAIN

CALIFORNIA
HIGH-SPEED RAIL AUTHORITY

**CALIFORNIA HIGH-SPEED TRAIN PROJECT**
**FRESNO TO BAKERSFIELD**
HANFORD SUBSECTION
ALIGNMENT H
HANFORD VIADUCT
TYPICAL SECTIONS

CONTRACT NO. HSR 06-0003
DRAWING NO. SV2312
SCALE AS SHOWN
SHEET NO. 13 OF 14

frank.palermo 12/23/2013 2:48:44 PM c:\pwworking\hmm\external\frank.palermo01-arup.com\d0128411\X-FB-SV-2312-H-X.dgn

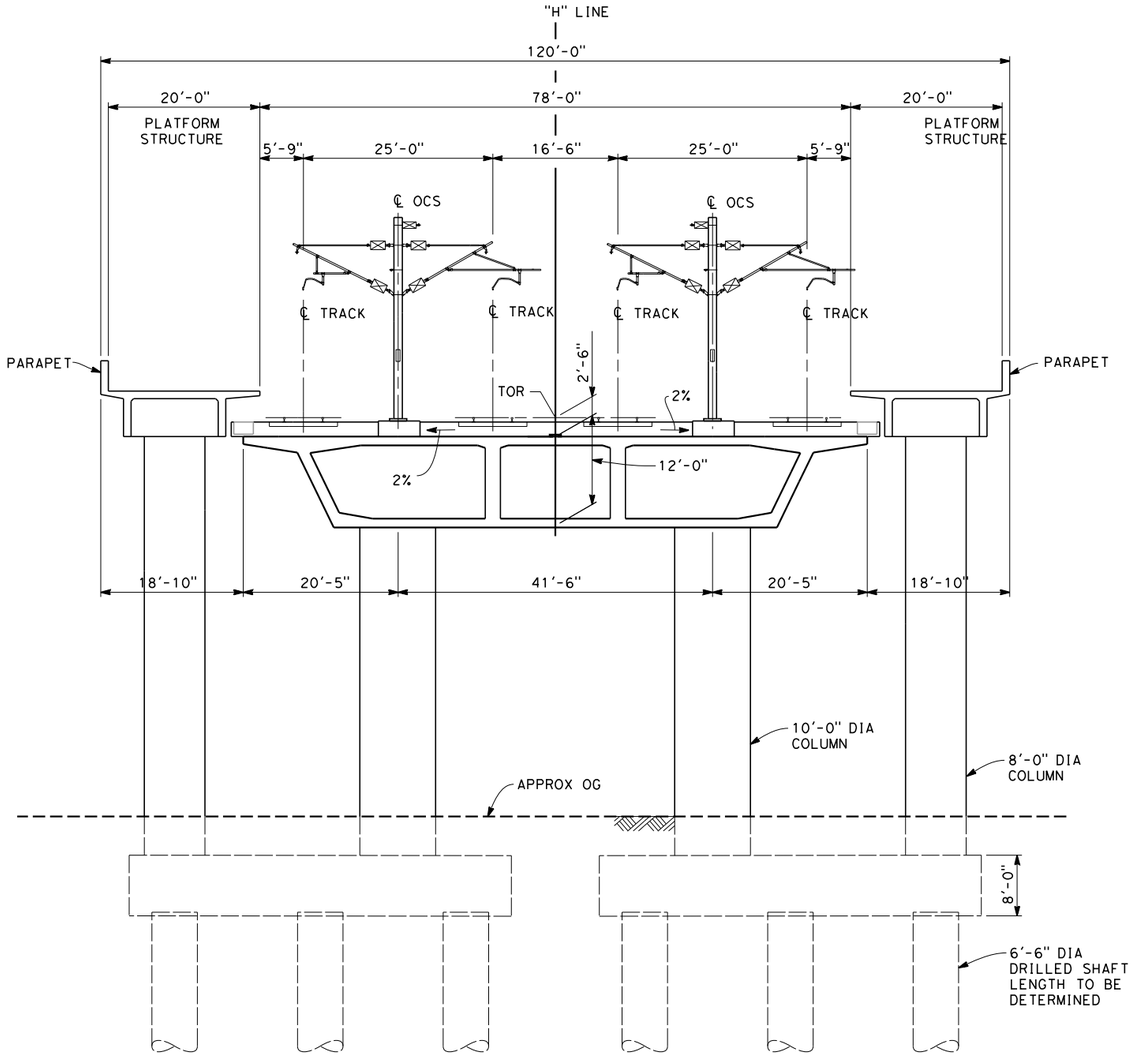


## SECTION C

SCALE: 1" = 10'

STA 1942+27 THROUGH 1956+67

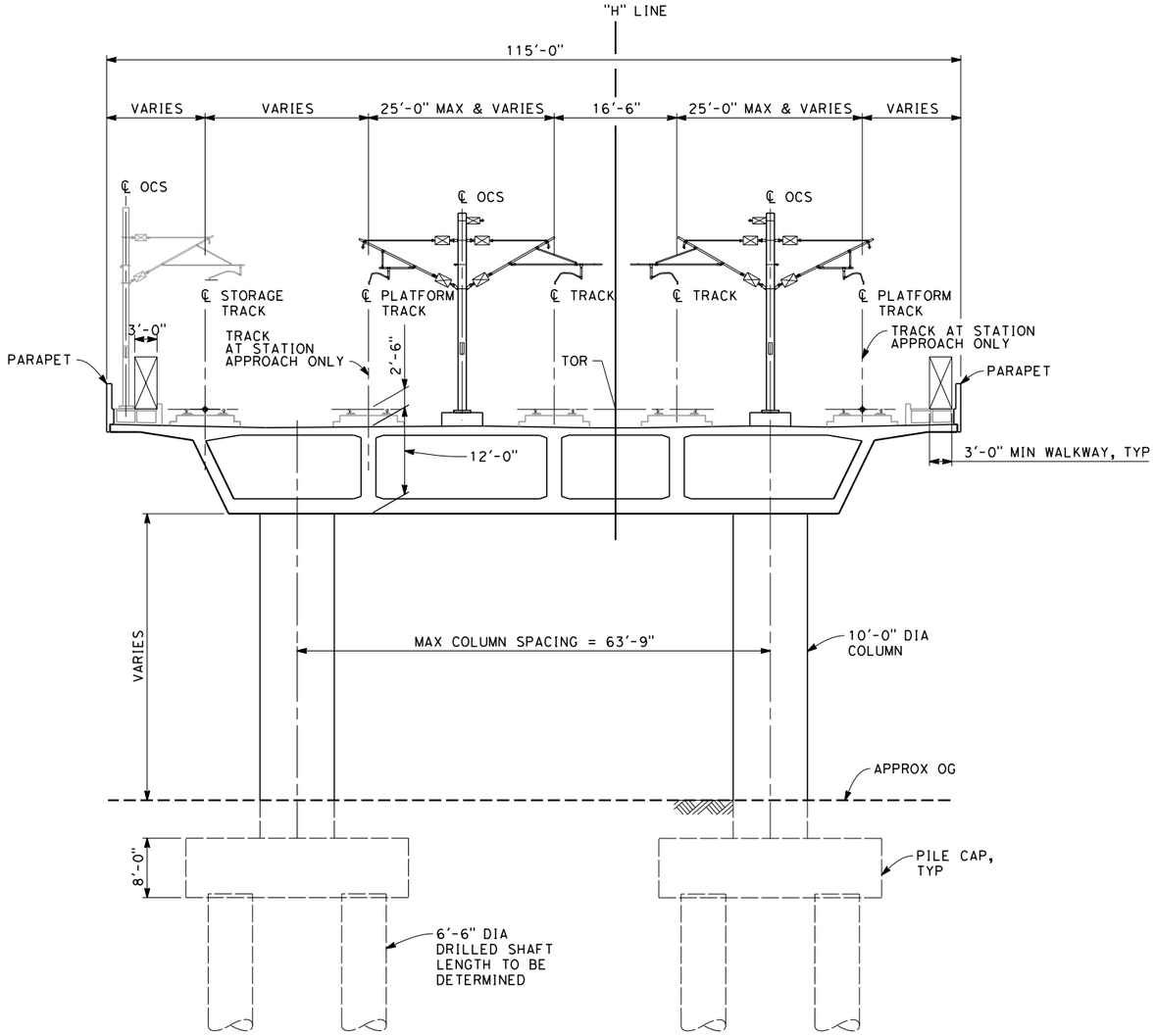


## SECTION D

SCALE: 1" = 10'

STA 1918+87 THROUGH 1942+27
STA 1956+67 THROUGH 1980+17

10 0 10 20
1"-10'

| REV | DATE | BY | CHK | APP | DESCRIPTION |
|---|---|---|---|---|---|

DESIGNED BY Y. REN
DRAWN BY M. LAMAGNA
CHECKED BY A. ARMSTRONG
IN CHARGE R. COFFIN
DATE 12/31/13

**RECORD SET 15% DESIGN SUBMISSION - NOT FOR CONSTRUCTION**

URS | HMM | ARUP
CALIFORNIA HIGH-SPEED TRAIN

CALIFORNIA
HIGH-SPEED RAIL AUTHORITY

**CALIFORNIA HIGH-SPEED TRAIN PROJECT**
**FRESNO TO BAKERSFIELD**
HANFORD SUBSECTION
ALIGNMENT H
HANFORD VIADUCT
TYPICAL SECTIONS

CONTRACT NO. HSR 06-0003
DRAWING NO. SV2313
SCALE AS SHOWN
SHEET NO. 14 OF 14

04/02/2014 - RFP No.: HSR 13-57

frank.palermo 12/23/2013 2:48:55 PM c:\pwworking\hmm\external\frank.palermo01-arup.com\d0128411\X-FB-SV-2313-H-X.dgn

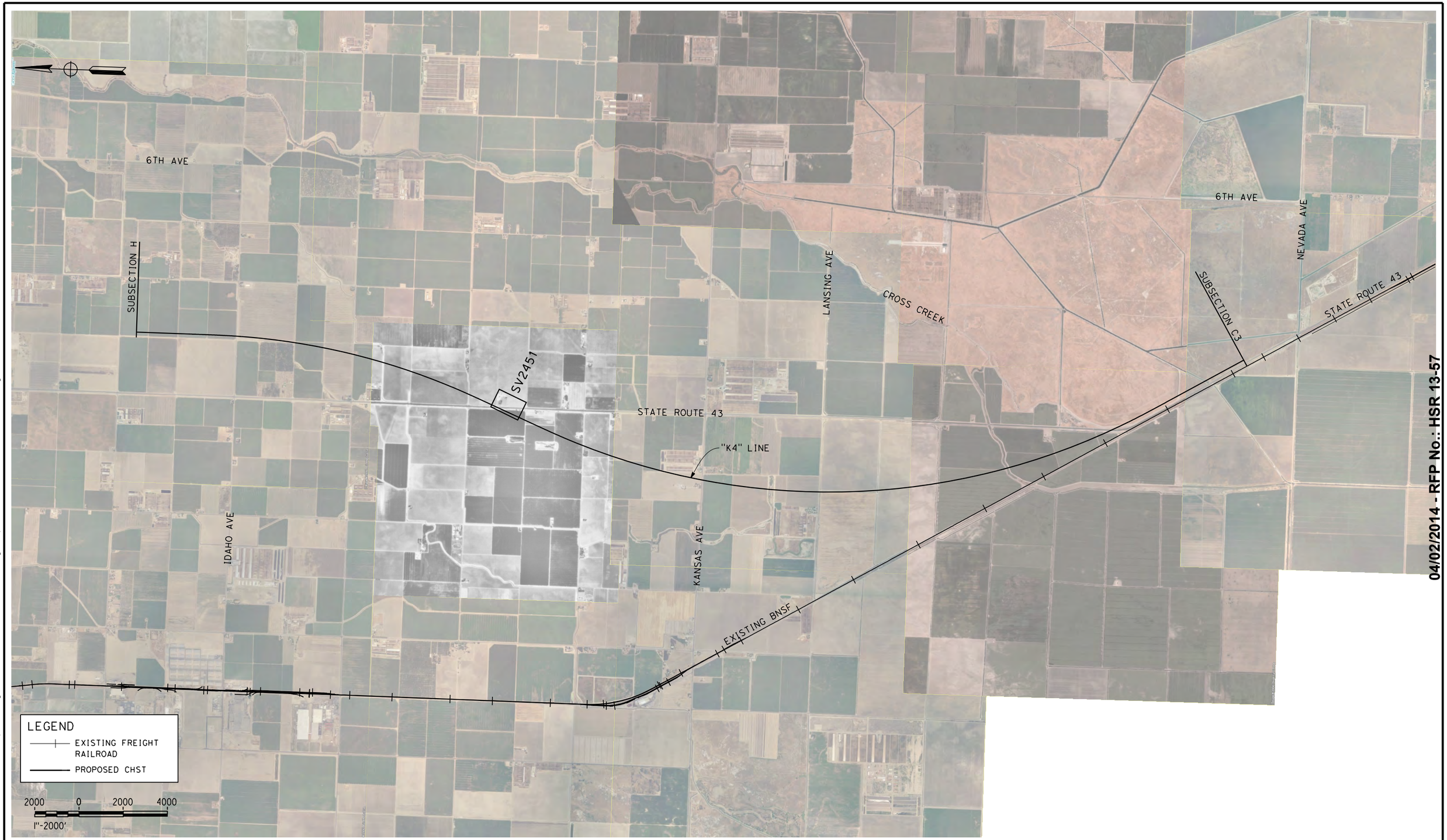


04/02/2014 - RFP No.: HSR 13-57

| REV | DATE | BY | CHK | APP | DESCRIPTION |
|---|---|---|---|---|---|

DESIGNED BY M. FISHER
DRAWN BY E. SUDHAUSEN
CHECKED BY A. ARMSTRONG
IN CHARGE R. COFFIN
DATE 12/31/13

**RECORD SET 15% DESIGN SUBMISSION - NOT FOR CONSTRUCTION**

URS | HMM | ARUP

CALIFORNIA HIGH-SPEED RAIL AUTHORITY

# CALIFORNIA HIGH-SPEED TRAIN PROJECT
# FRESNO TO BAKERSFIELD

KAWEAH SUBSECTION
ALIGNMENT K4
STATE ROUTE 43 UNDERPASS
KEY MAP

CONTRACT NO. HSR 06-0003
DRAWING NO. SV2450
SCALE AS SHOWN
SHEET NO. 1 OF 3

andrew.armstrong 2/12/2013 2:00:58 PM c:\pwworking\hmm\external\andrew.armstrong-arup.com\d0125236\X-FB-SV-2450-K4.dgn

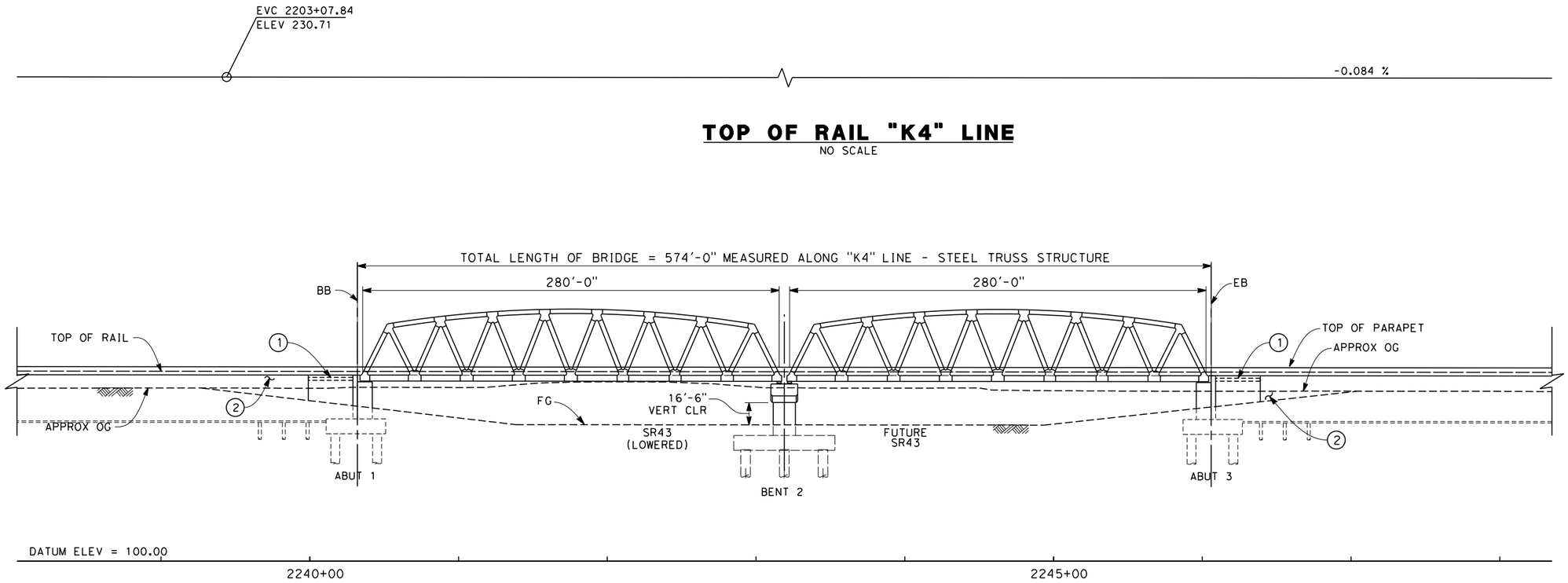


## TOP OF RAIL "K4" LINE

NO SCALE

## ELEVATION

SCALE 1" = 40'

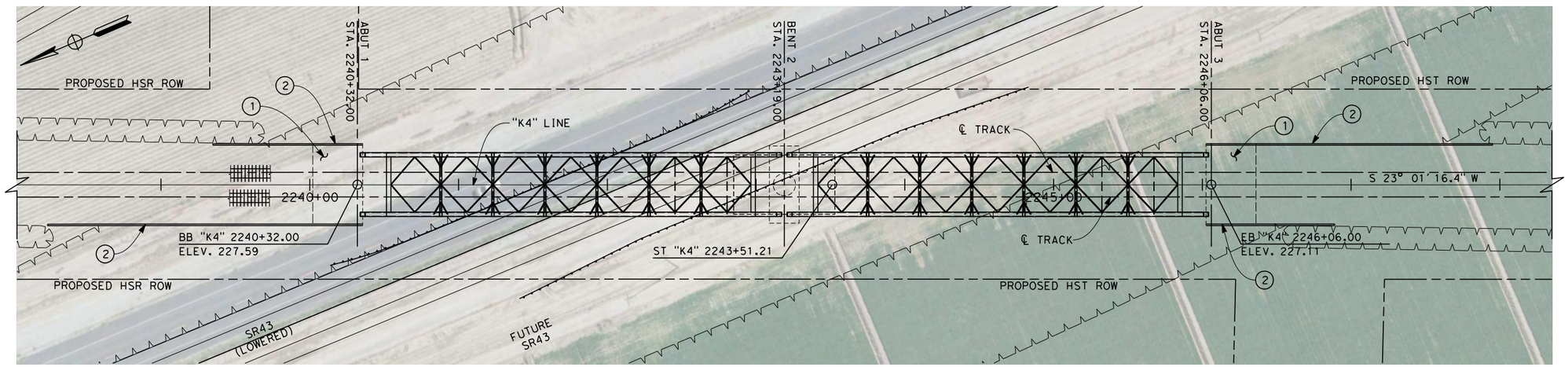


## PLAN

SCALE 1" = 40'

NOTES

1. NOT ALL PILES SHOWN
2. PILE LENGTH TO BE DETERMINED
3. SUPERSTRUCTURE CONSTRUCTION, UON
   SIMPLE SPANS - MSS OR FLPM
   CONTINUOUS SPANS - BCC - PRECAST IN-SITU
   STEEL TRUSS - INSITU, SLID OR LAUNCHED
   ELEVATED SLABS - PC BEAM AND INSITU SLAB
4. UTILITY LOCATIONS TO BE DETERMINED
5. ACCESS STAIRWAYS ARE PROVIDED AT SYSTEMS SITES (APPROX. 2.5 MILE INTERVALS). LADDER ACCESS TO VIADUCTS IS PROVIDED AT 2500 FT INTERVALS WITH ACCESS ROAD AND TURNING CIRCLE WHERE NECESSARY.

LEGEND:

(1) STRUCTURE APPROACH SLAB

(2) RETAINING WALL

* ESTIMATED 100-YEAR FLOOD ELEVATION, SEE "FRESNO TO BAKERSFIELD CORRIDOR HYDROLOGY, HYDRAULICS AND DRAINAGE 15% DRAFT REPORT".

40 0 40 80
1"=40'

04/02/2014 - RFP No.: HSR 13-57

| REV | DATE | BY | CHK | APP | DESCRIPTION |
|---|---|---|---|---|---|

DESIGNED BY S.T. MAK
DRAWN BY J. VALENZUELA
CHECKED BY A. ARMSTRONG
IN CHARGE R. COFFIN
DATE 12/31/13

**RECORD SET 15% DESIGN SUBMISSION - NOT FOR CONSTRUCTION**

URS | HMM | ARUP
CALIFORNIA HIGH-SPEED TRAIN

CALIFORNIA HIGH-SPEED RAIL AUTHORITY

**CALIFORNIA HIGH-SPEED TRAIN PROJECT**
**FRESNO TO BAKERSFIELD**
KAWEAH SUBSECTION
ALIGNMENT K4
STATE ROUTE 43 UNDERPASS
PLAN AND ELEVATION

CONTRACT NO. HSR 06-0003
DRAWING NO. SV2451
SCALE AS SHOWN
SHEET NO. 2 OF 3

andrew.armstrong\ 2/12/2013 2:01:38 PM c:\pwworking\hmm\external\andrew.armstrong-arup.com\d0125236\X-FB-SV-2451-K4.dgn

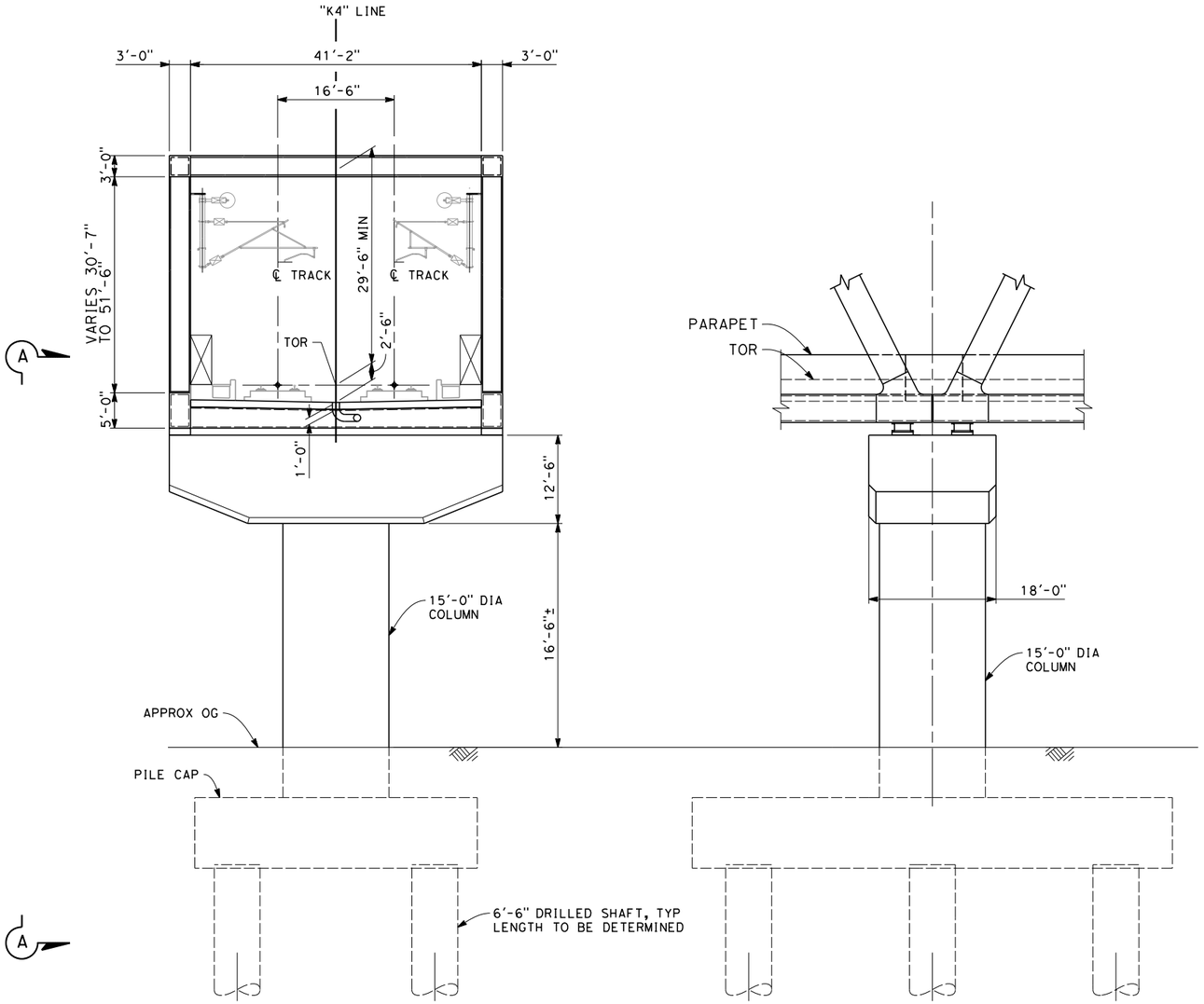


**SECTION A**
SCALE: 1" = 10'

**SECTION A-A**
SCALE: 1" = 10'

10 0 10 20
1"-10'

04/02/2014 - RFP No.: HSR 13-57

| REV | DATE | BY | CHK | APP | DESCRIPTION |
|---|---|---|---|---|---|

DESIGNED BY Y. REN
DRAWN BY D. ORIZA
CHECKED BY A. ARMSTRONG
IN CHARGE R. COFFIN
DATE 12/31/13

**RECORD SET 15% DESIGN SUBMISSION - NOT FOR CONSTRUCTION**

URS | HMM | ARUP
California High-Speed Train

CALIFORNIA HIGH-SPEED RAIL AUTHORITY

**CALIFORNIA HIGH-SPEED TRAIN PROJECT**
**FRESNO TO BAKERSFIELD**
KAWEAH SUBSECTION
ALIGNMENT K4
STATE ROUTE 43 UNDERPASS
TYPICAL SECTIONS

CONTRACT NO. HSR 06-0003
DRAWING NO. SV2452
SCALE AS SHOWN
SHEET NO. 3 OF 3

andrew.armstrong\ 2/12/2013 2:01:43 PM c:\pwworking\hmm\external\andrew.armstrong-arup.com\d0125236\X-FB-SV-2452-K4.dgn

04/02/2014 - RFP No.: HSR 13-57

| REV | DATE | BY | CHK | APP | DESCRIPTION |
|---|---|---|---|---|---|

DESIGNED BY M. FISHER
DRAWN BY E. SUDHAUSEN
CHECKED BY A. ARMSTRONG
IN CHARGE R. COFFIN
DATE 12/31/13

RECORD SET 15% DESIGN SUBMISSION - NOT FOR CONSTRUCTION

URS | HMM | ARUP
CALIFORNIA HIGH-SPEED TRAIN

CALIFORNIA HIGH-SPEED RAIL AUTHORITY

# CALIFORNIA HIGH-SPEED TRAIN PROJECT
## FRESNO TO BAKERSFIELD
KAWEAH SUBSECTION
ALIGNMENT K4
CROSS CREEK VIADUCT
KEY MAP

CONTRACT NO. HSR 06-0003
DRAWING NO. SV2460
SCALE AS SHOWN
SHEET NO. 1 OF 13

andrew.armstrong\2/12/2013 2:02:57 PM c:\pwworking\hmm\external\andrew.armstrong-arup.com\d0125236\FB-SV-2460-K4.dgn

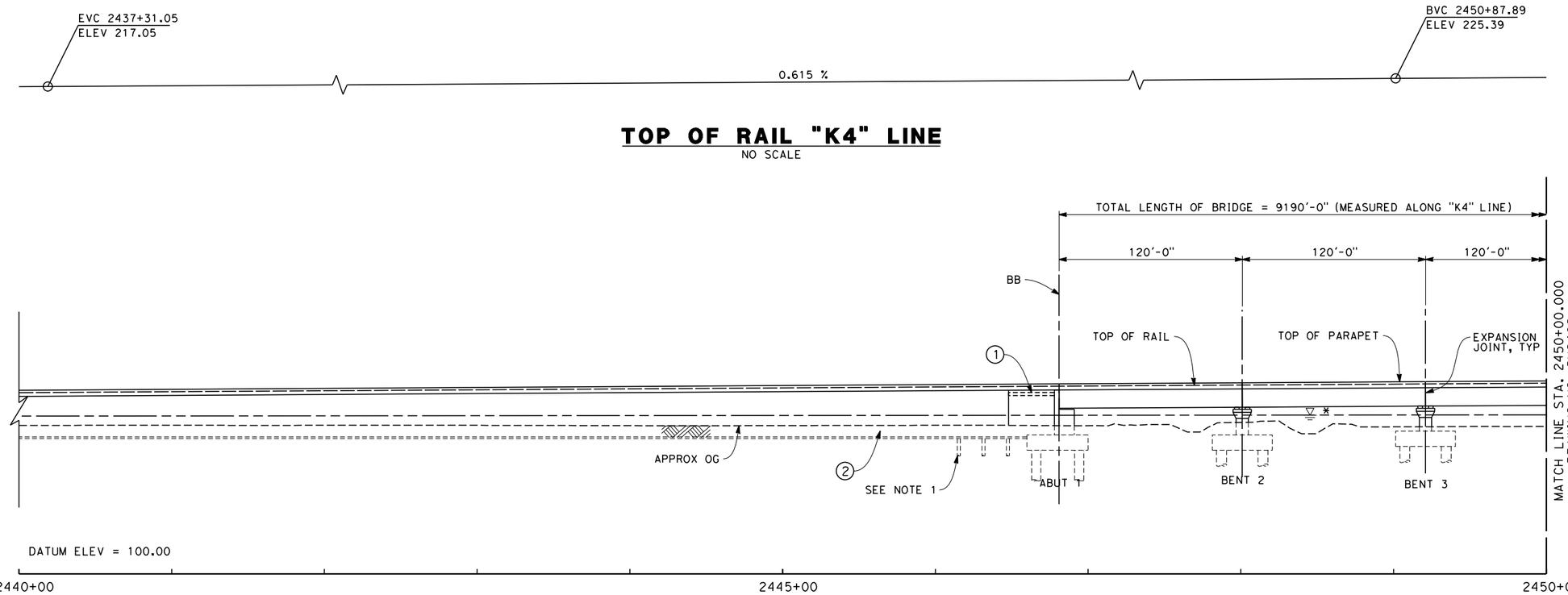


## TOP OF RAIL "K4" LINE
NO SCALE

## ELEVATION
SCALE 1" = 40'

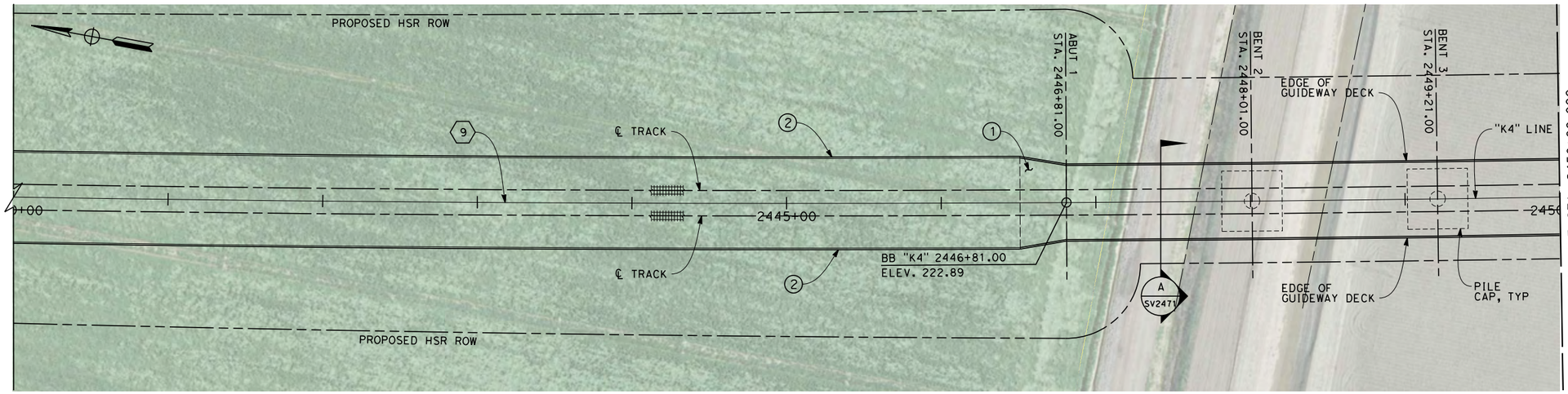


## PLAN
SCALE 1" = 40'

NOTES
1. NOT ALL PILES SHOWN
2. PILE LENGTH TO BE DETERMINED
3. SUPERSTRUCTURE CONSTRUCTION, UON
   SIMPLE SPANS - MSS OR FLPM
   CONTINUOUS SPANS - BCC - PRECAST IN-SITU
   STEEL TRUSS - INSITU, SLID OR LAUNCHED
   ELEVATED SLABS - PC BEAM AND INSITU SLAB
4. UTILITY LOCATIONS TO BE DETERMINED
5. ACCESS STAIRWAYS ARE PROVIDED AT SYSTEMS SITES (APPROX. 2.5 MILE INTERVALS). LADDER ACCESS TO VIADUCTS IS PROVIDED AT 2500 FT INTERVALS WITH ACCESS ROAD AND TURNING CIRCLE WHERE NECESSARY.

LEGEND:
1. STRUCTURE APPROACH SLAB
2. RETAINING WALL
* ESTIMATED 100-YEAR FLOOD ELEVATION, SEE "FRESNO TO BAKERSFIELD CORRIDOR HYDROLOGY, HYDRAULICS AND DRAINAGE 15% DRAFT REPORT".

CURVE DATA

9

R = 30500.00'

Δ = 49° 01' 18.3"

T = 13906.6'

L = 26095.5'

40 0 40 80
1"=40'

04/02/2014 - RFP No.: HSR 13-57

| REV | DATE | BY | CHK | APP | DESCRIPTION |
|---|---|---|---|---|---|

DESIGNED BY M. FISHER
DRAWN BY F. PALERMO
CHECKED BY A. ARMSTRONG
IN CHARGE R. COFFIN
DATE 12/31/13

RECORD SET 15% DESIGN SUBMISSION - NOT FOR CONSTRUCTION

URS | HMM | ARUP
CALIFORNIA HIGH-SPEED TRAIN

CALIFORNIA HIGH-SPEED RAIL AUTHORITY

**CALIFORNIA HIGH-SPEED TRAIN PROJECT**
**FRESNO TO BAKERSFIELD**
KAWEAH SUBSECTION
ALIGNMENT K4
CROSS CREEK VIADUCT
PLAN AND ELEVATION

CONTRACT NO. HSR 06-0003
DRAWING NO. SV2461
SCALE AS SHOWN
SHEET NO. 2 OF 13

andrew.armstrong 2/12/2013 2:03:34 PM c:\pwworking\hmm\external\andrew.armstrong-arup.com\d0125236\FB-SV-2461-K4.dgn

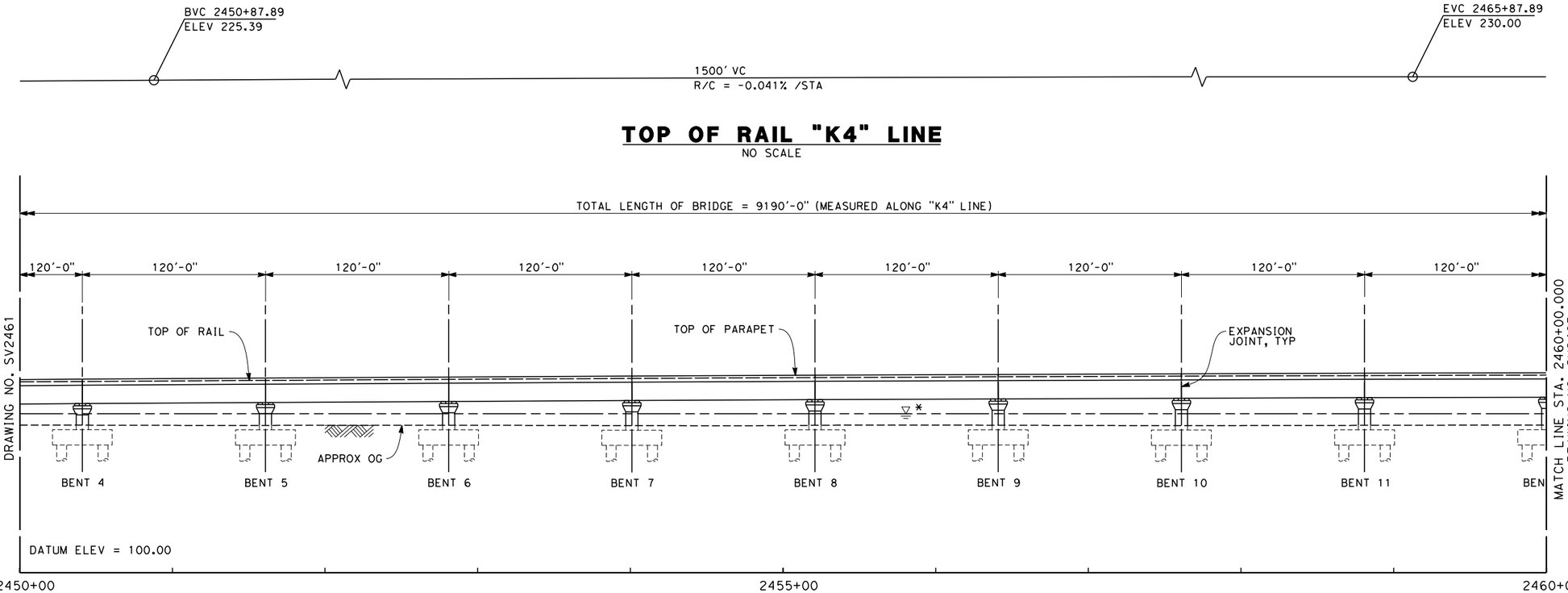


## TOP OF RAIL "K4" LINE
NO SCALE

## ELEVATION
SCALE 1" = 40'

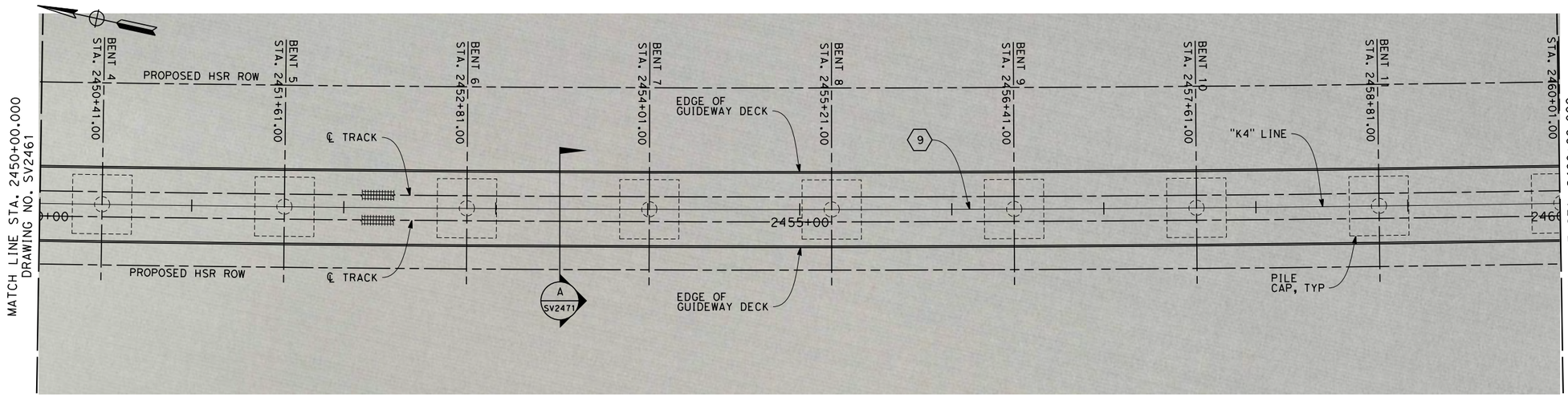


## PLAN
SCALE 1" = 40'

NOTES
1. NOT ALL PILES SHOWN
2. PILE LENGTH TO BE DETERMINED
3. SUPERSTRUCTURE CONSTRUCTION, UON
   SIMPLE SPANS - MSS OR FLPM
   CONTINUOUS SPANS - BCC - PRECAST IN-SITU
   STEEL TRUSS - INSITU, SLID OR LAUNCHED
   ELEVATED SLABS - PC BEAM AND INSITU SLAB
4. UTILITY LOCATIONS TO BE DETERMINED
5. ACCESS STAIRWAYS ARE PROVIDED AT SYSTEMS SITES (APPROX. 2.5 MILE INTERVALS). LADDER ACCESS TO VIADUCTS IS PROVIDED AT 2500 FT INTERVALS WITH ACCESS ROAD AND TURNING CIRCLE WHERE NECESSARY.

LEGEND:
1. STRUCTURE APPROACH SLAB
2. RETAINING WALL
* ESTIMATED 100-YEAR FLOOD ELEVATION, SEE "FRESNO TO BAKERSFIELD CORRIDOR HYDROLOGY, HYDRAULICS AND DRAINAGE 15% DRAFT REPORT".

CURVE DATA

9

R = 30500.00'
Δ = 49° 01' 18.3"
T = 13906.6'
L = 26095.5'

40 0 40 80
1"=40'

04/02/2014 - RFP No.: HSR 13-57

| REV | DATE | BY | CHK | APP | DESCRIPTION |
|---|---|---|---|---|---|

DESIGNED BY M. FISHER
DRAWN BY F.PALERMO
CHECKED BY A. ARMSTRONG
IN CHARGE R. COFFIN
DATE 12/31/13

RECORD SET 15% DESIGN SUBMISSION - NOT FOR CONSTRUCTION

URS | HMM | ARUP
CALIFORNIA HIGH-SPEED TRAIN

CALIFORNIA HIGH-SPEED RAIL AUTHORITY

# CALIFORNIA HIGH-SPEED TRAIN PROJECT
# FRESNO TO BAKERSFIELD
KAWEAH SUBSECTION
ALIGNMENT K4
CROSS CREEK VIADUCT
PLAN AND ELEVATION

CONTRACT NO. HSR 06-0003
DRAWING NO. SV2462
SCALE AS SHOWN
SHEET NO. 3 OF 13

andrew.armstrong 12/12/2013 2:03:54 PM c:\pwworking\hmm\external\andrew.armstrong-arup.com\d0125236\FB-SV-2462-K4.dgn

## TOP OF RAIL "K4" LINE

NO SCALE

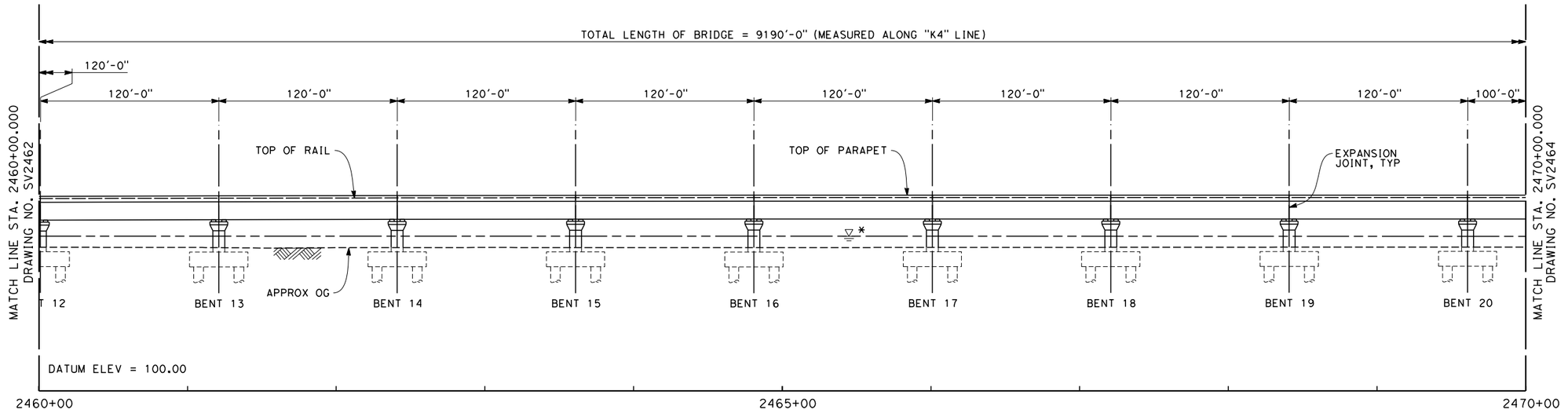


## ELEVATION

SCALE 1" = 40'

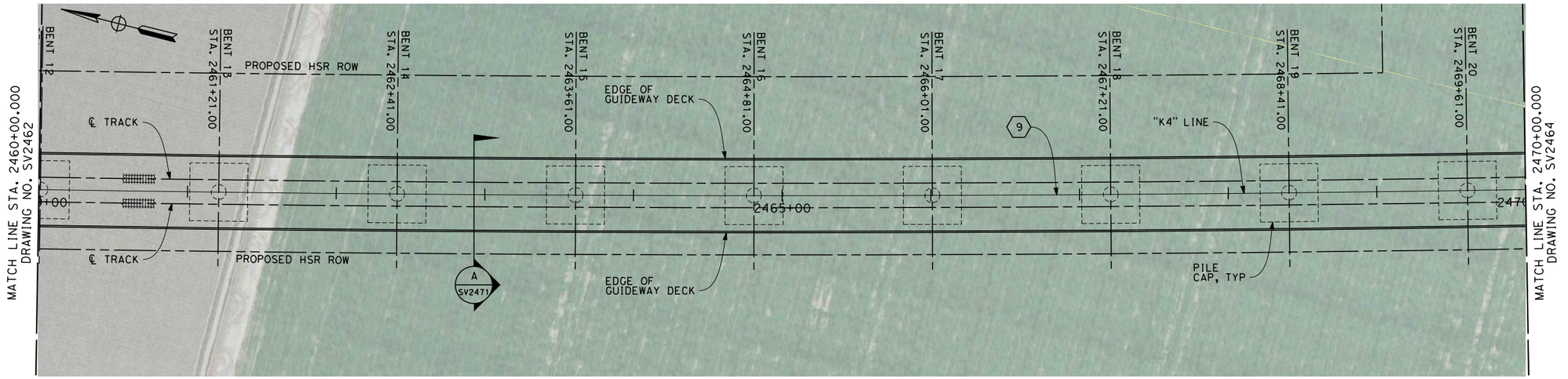


## PLAN

SCALE 1" = 40'

### NOTES

1. NOT ALL PILES SHOWN
2. PILE LENGTH TO BE DETERMINED
3. SUPERSTRUCTURE CONSTRUCTION, UON
   - SIMPLE SPANS - MSS OR FLPM
   - CONTINUOUS SPANS - BCC - PRECAST IN-SITU
   - STEEL TRUSS - INSITU, SLID OR LAUNCHED
   - ELEVATED SLABS - PC BEAM AND INSITU SLAB
4. UTILITY LOCATIONS TO BE DETERMINED
5. ACCESS STAIRWAYS ARE PROVIDED AT SYSTEMS SITES (APPROX. 2.5 MILE INTERVALS). LADDER ACCESS TO VIADUCTS IS PROVIDED AT 2500 FT INTERVALS WITH ACCESS ROAD AND TURNING CIRCLE WHERE NECESSARY.

LEGEND:

(1) STRUCTURE APPROACH SLAB

(2) RETAINING WALL

* ESTIMATED 100-YEAR FLOOD ELEVATION, SEE "FRESNO TO BAKERSFIELD CORRIDOR HYDROLOGY, HYDRAULICS AND DRAINAGE 15% DRAFT REPORT".

CURVE DATA

(9)

R = 30500.00'

Δ = 49° 01' 18.3"

T = 13906.6'

L = 26095.5'

40 0 40 80

1"=40'

04/02/2014 - RFP No.: HSR 13-57

| REV | DATE | BY | CHK | APP | DESCRIPTION |
|---|---|---|---|---|---|

DESIGNED BY M. FISHER
DRAWN BY F. PALERMO
CHECKED BY A. ARMSTRONG
IN CHARGE R. COFFIN
DATE 12/31/13

**RECORD SET 15% DESIGN SUBMISSION - NOT FOR CONSTRUCTION**

URS | HMM | ARUP
CALIFORNIA HIGH-SPEED TRAIN

CALIFORNIA HIGH-SPEED RAIL AUTHORITY

# CALIFORNIA HIGH-SPEED TRAIN PROJECT
# FRESNO TO BAKERSFIELD

KAWEAH SUBSECTION
ALIGNMENT K4
CROSS CREEK VIADUCT
PLAN AND ELEVATION

CONTRACT NO. HSR 06-0003
DRAWING NO. SV2463
SCALE AS SHOWN
SHEET NO. 4 OF 13

andrew.armstrong\2/12/2013 2:04:18 PM c:\pwworking\hmm\external\andrew.armstrong-arup.com\d0125236\FB-SV-2463-K4.dgn

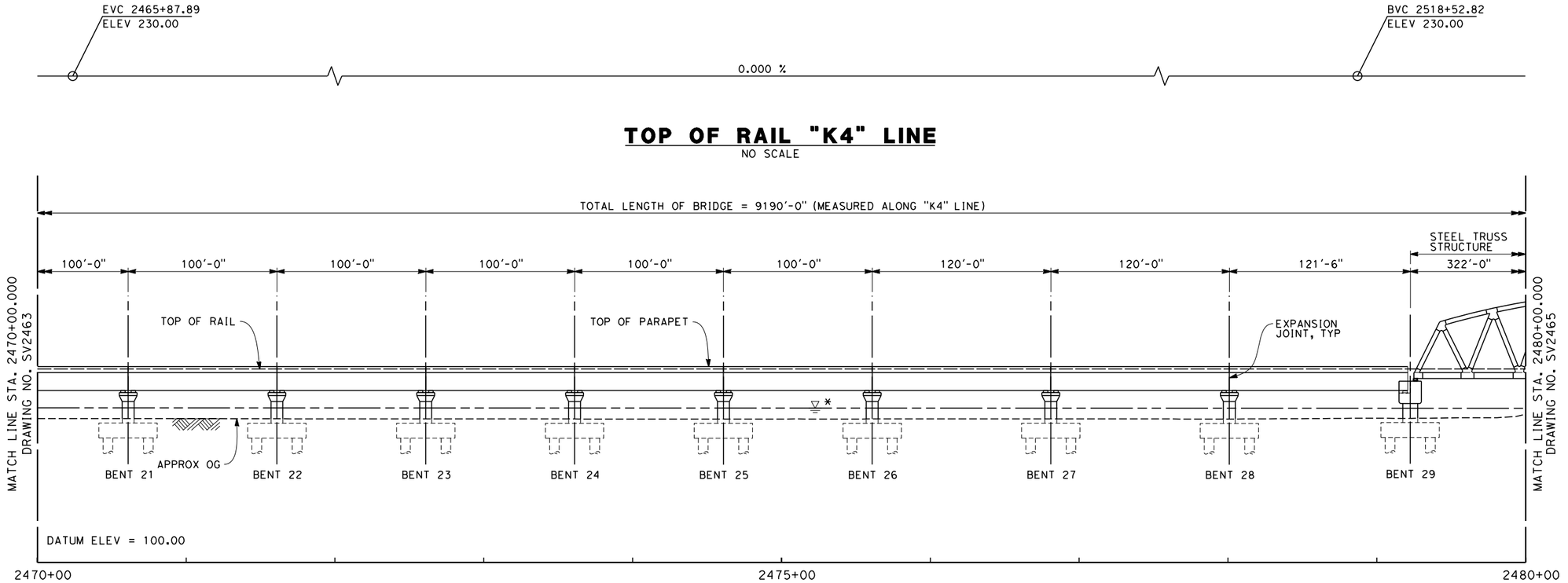


## TOP OF RAIL "K4" LINE

NO SCALE

## ELEVATION

SCALE 1" = 40'

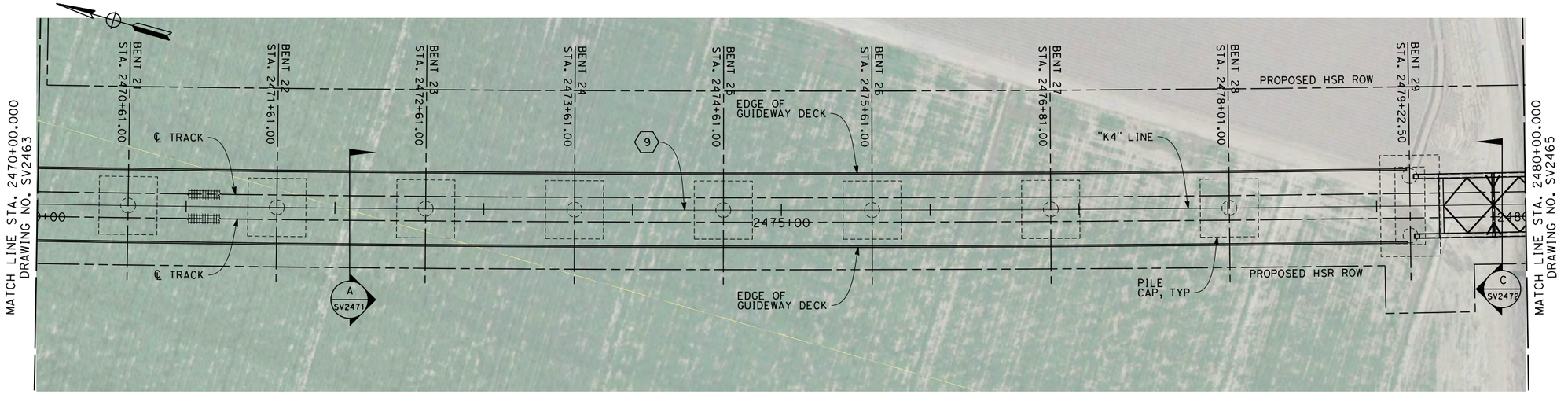


## PLAN

SCALE 1" = 40'

NOTES

1. NOT ALL PILES SHOWN
2. PILE LENGTH TO BE DETERMINED
3. SUPERSTRUCTURE CONSTRUCTION, UON
   SIMPLE SPANS - MSS OR FLPM
   CONTINUOUS SPANS - BCC - PRECAST IN-SITU
   STEEL TRUSS - INSITU, SLID OR LAUNCHED
   ELEVATED SLABS - PC BEAM AND INSITU SLAB
4. UTILITY LOCATIONS TO BE DETERMINED
5. ACCESS STAIRWAYS ARE PROVIDED AT SYSTEMS SITES (APPROX. 2.5 MILE INTERVALS). LADDER ACCESS TO VIADUCTS IS PROVIDED AT 2500 FT INTERVALS WITH ACCESS ROAD AND TURNING CIRCLE WHERE NECESSARY.

LEGEND:

(1) STRUCTURE APPROACH SLAB

(2) RETAINING WALL

* ESTIMATED 100-YEAR FLOOD ELEVATION, SEE "FRESNO TO BAKERSFIELD CORRIDOR HYDROLOGY, HYDRAULICS AND DRAINAGE 15% DRAFT REPORT".

CURVE DATA

(9)

R = 30500.00'

Δ = 49° 01' 18.3"

T = 13906.6'

L = 26095.5'

40 0 40 80

1"=40'

04/02/2014 - RFP No.: HSR 13-57

| REV | DATE | BY | CHK | APP | DESCRIPTION |
|---|---|---|---|---|---|

DESIGNED BY M. FISHER
DRAWN BY F. PALERMO
CHECKED BY A. ARMSTRONG
IN CHARGE R. COFFIN
DATE 12/31/13

RECORD SET 15% DESIGN SUBMISSION - NOT FOR CONSTRUCTION

URS | HMM | ARUP
CALIFORNIA HIGH-SPEED TRAIN

CALIFORNIA HIGH-SPEED RAIL AUTHORITY

**CALIFORNIA HIGH-SPEED TRAIN PROJECT**
**FRESNO TO BAKERSFIELD**
KAWEAH SUBSECTION
ALIGNMENT K4
CROSS CREEK VIADUCT
PLAN AND ELEVATION

CONTRACT NO. HSR 06-0003
DRAWING NO. SV2464
SCALE AS SHOWN
SHEET NO. 5 OF 13

andrew.armstrong\ 2/12/2013 2:04:41 PM c:\pwworking\hmm\external\andrew.armstrong-arup.com\d0125236\FB-SV-2464-K4.dgn

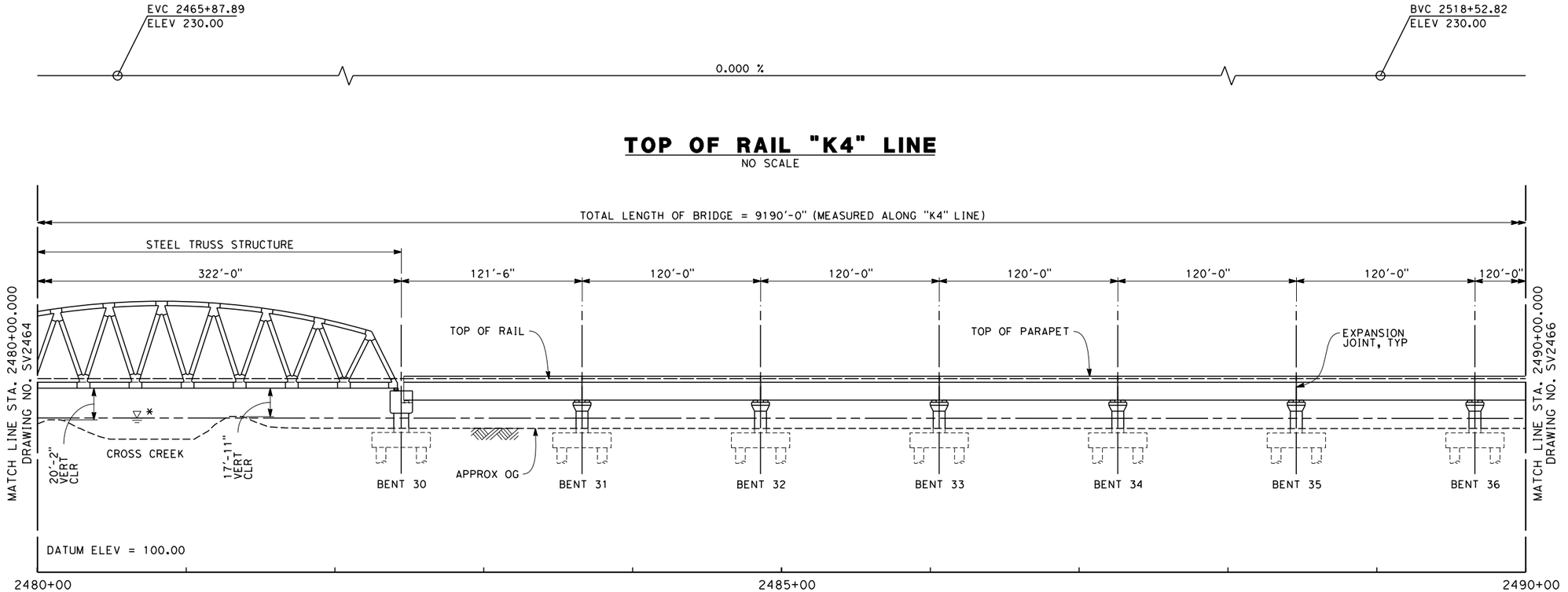


## TOP OF RAIL "K4" LINE
NO SCALE

## ELEVATION
SCALE 1" = 40'

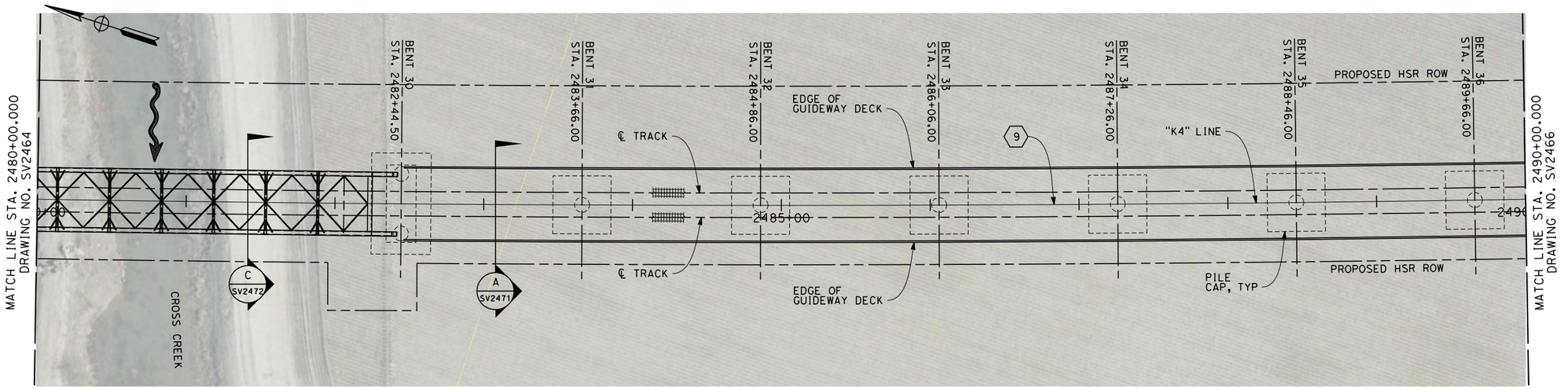


## PLAN
SCALE 1" = 40'

NOTES
1. NOT ALL PILES SHOWN
2. PILE LENGTH TO BE DETERMINED
3. SUPERSTRUCTURE CONSTRUCTION, UON
   SIMPLE SPANS - MSS OR FLPM
   CONTINUOUS SPANS - BCC - PRECAST IN-SITU
   STEEL TRUSS - INSITU, SLID OR LAUNCHED
   ELEVATED SLABS - PC BEAM AND INSITU SLAB
4. UTILITY LOCATIONS TO BE DETERMINED
5. ACCESS STAIRWAYS ARE PROVIDED AT SYSTEMS SITES (APPROX. 2.5 MILE INTERVALS). LADDER ACCESS TO VIADUCTS IS PROVIDED AT 2500 FT INTERVALS WITH ACCESS ROAD AND TURNING CIRCLE WHERE NECESSARY.

LEGEND:
(1) STRUCTURE APPROACH SLAB
(2) RETAINING WALL
* ESTIMATED 100-YEAR FLOOD ELEVATION, SEE "FRESNO TO BAKERSFIELD CORRIDOR HYDROLOGY, HYDRAULICS AND DRAINAGE 15% DRAFT REPORT".

CURVE DATA

(9)
R = 30500.00'
Δ = 49° 01' 18.3"
T = 13906.6'
L = 26095.5'

40 0 40 80
1"=40'

04/02/2014 - RFP No.: HSR 13-57

| REV | DATE | BY | CHK | APP | DESCRIPTION |
|---|---|---|---|---|---|

DESIGNED BY M. FISHER
DRAWN BY F. PALERMO
CHECKED BY A. ARMSTRONG
IN CHARGE R. COFFIN
DATE 12/31/13

RECORD SET 15% DESIGN SUBMISSION - NOT FOR CONSTRUCTION

URS | HMM | ARUP
California High-Speed Train

CALIFORNIA HIGH-SPEED RAIL AUTHORITY

# CALIFORNIA HIGH-SPEED TRAIN PROJECT
# FRESNO TO BAKERSFIELD
KAWEAH SUBSECTION
ALIGNMENT K4
CROSS CREEK VIADUCT
PLAN AND ELEVATION

CONTRACT NO. HSR 06-0003
DRAWING NO. SV2465
SCALE AS SHOWN
SHEET NO. 6 OF 13

andrew.armstrong\2/12/2013 2:05:01 PM c:\pwworking\hmm\external\andrew.armstrong-arup.com\d0125236\FB-SV-2465-K4.dgn

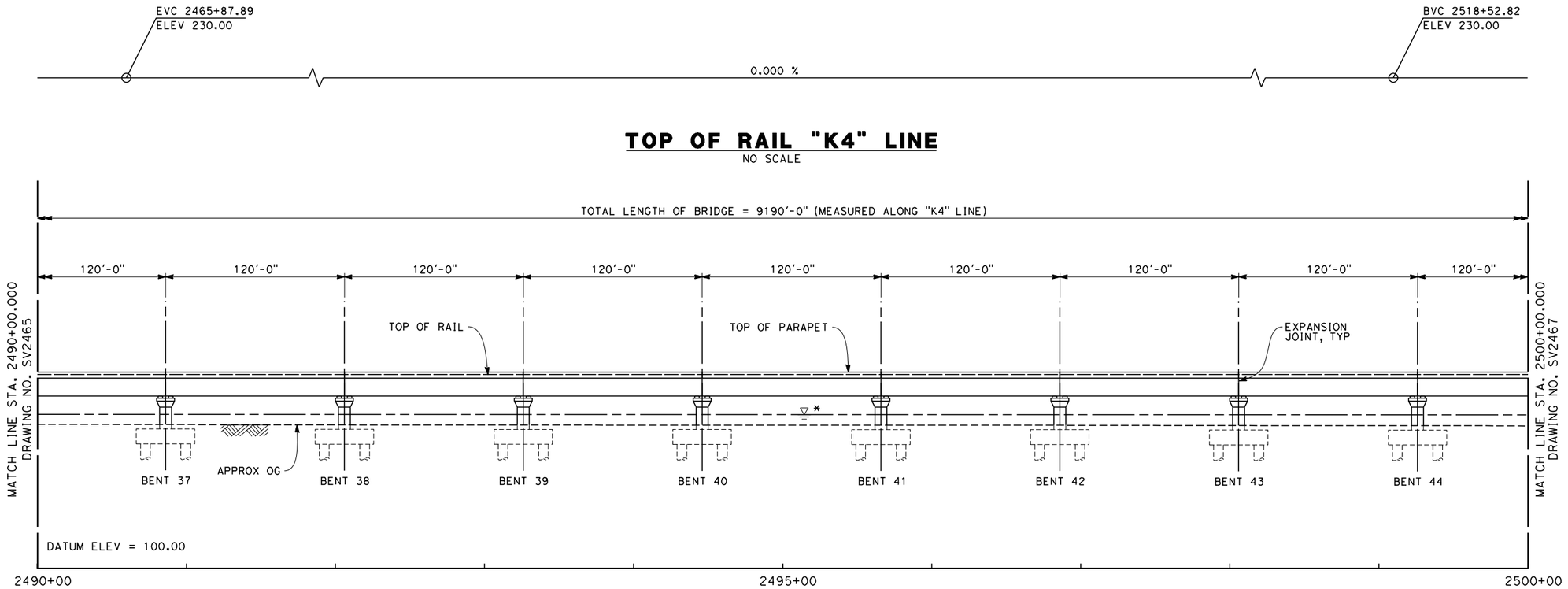


## TOP OF RAIL "K4" LINE

NO SCALE

## ELEVATION

SCALE 1" = 40'

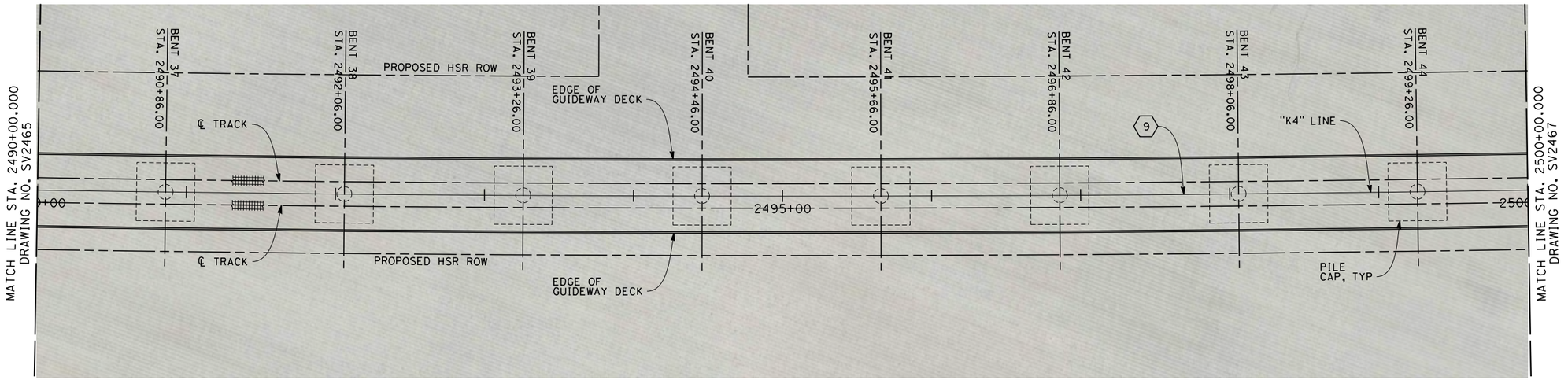


## PLAN

SCALE 1" = 40'

NOTES

1. NOT ALL PILES SHOWN
2. PILE LENGTH TO BE DETERMINED
3. SUPERSTRUCTURE CONSTRUCTION, UON
   SIMPLE SPANS - MSS OR FLPM
   CONTINUOUS SPANS - BCC - PRECAST IN-SITU
   STEEL TRUSS - INSITU, SLID OR LAUNCHED
   ELEVATED SLABS - PC BEAM AND INSITU SLAB
4. UTILITY LOCATIONS TO BE DETERMINED
5. ACCESS STAIRWAYS ARE PROVIDED AT SYSTEMS SITES (APPROX. 2.5 MILE INTERVALS). LADDER ACCESS TO VIADUCTS IS PROVIDED AT 2500 FT INTERVALS WITH ACCESS ROAD AND TURNING CIRCLE WHERE NECESSARY.

LEGEND:

(1) STRUCTURE APPROACH SLAB

(2) RETAINING WALL

* ESTIMATED 100-YEAR FLOOD ELEVATION, SEE "FRESNO TO BAKERSFIELD CORRIDOR HYDROLOGY, HYDRAULICS AND DRAINAGE 15% DRAFT REPORT".

CURVE DATA

(9)

R = 30500.00'

Δ = 49° 01' 18.3"

T = 13906.6'

L = 26095.5'

40 0 40 80

1"=40'

04/02/2014 - RFP No.: HSR 13-57

| REV | DATE | BY | CHK | APP | DESCRIPTION |
|---|---|---|---|---|---|

DESIGNED BY M. FISHER
DRAWN BY F. PALERMO
CHECKED BY A. ARMSTRONG
IN CHARGE R. COFFIN
DATE 12/31/13

RECORD SET 15% DESIGN SUBMISSION - NOT FOR CONSTRUCTION

URS | HMM | ARUP
CALIFORNIA HIGH-SPEED TRAIN

CALIFORNIA HIGH-SPEED RAIL AUTHORITY

**CALIFORNIA HIGH-SPEED TRAIN PROJECT**
**FRESNO TO BAKERSFIELD**
KAWEAH SUBSECTION
ALIGNMENT K4
CROSS CREEK VIADUCT
PLAN AND ELEVATION

CONTRACT NO. HSR 06-0003
DRAWING NO. SV2466
SCALE AS SHOWN
SHEET NO. 7 OF 13

andrew.armstrong\ 2/12/2013 2:05:21 PM c:\pwworking\hmm\external\andrew.armstrong-arup.com\d0125236\FB-SV-2466-K4.dgn

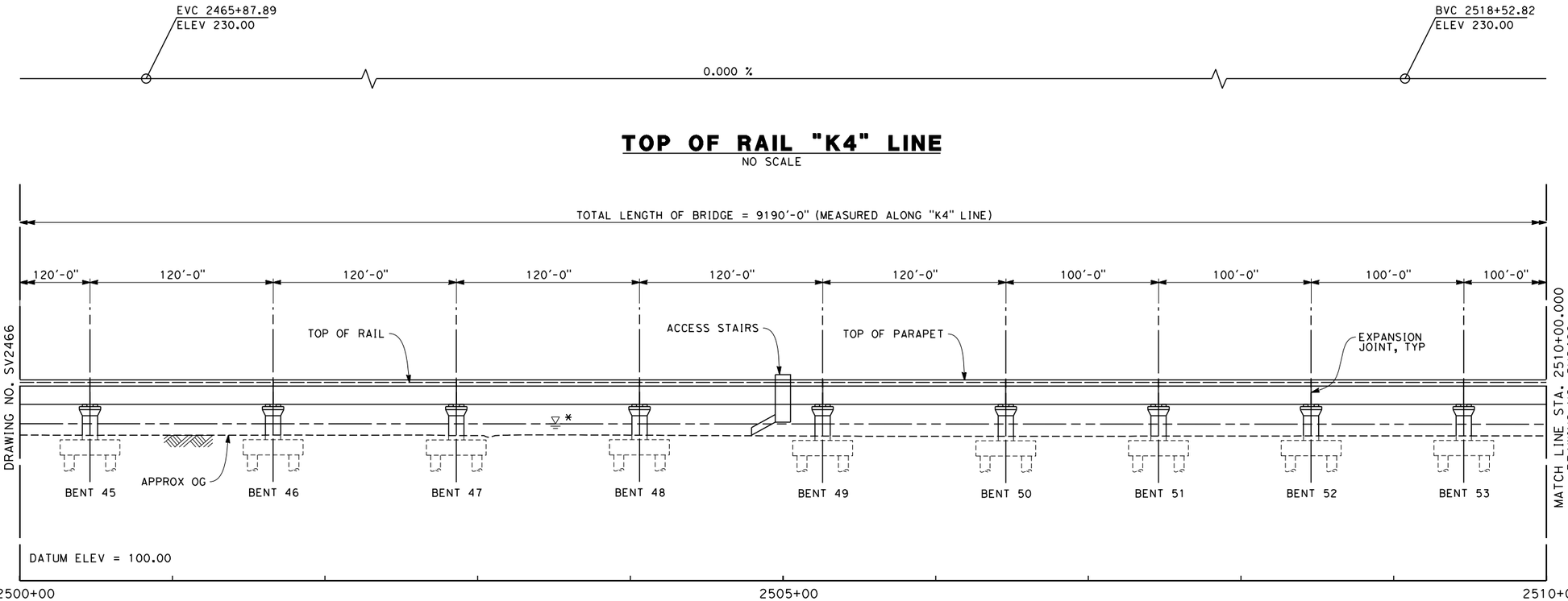


## TOP OF RAIL "K4" LINE
NO SCALE

## ELEVATION
SCALE 1" = 40'

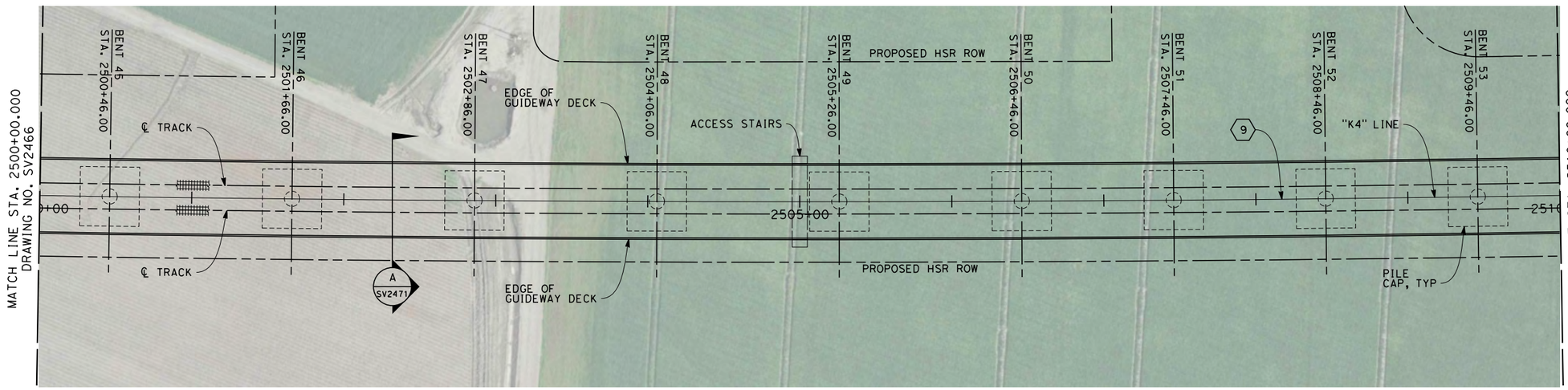


## PLAN
SCALE 1" = 40'

## NOTES
1. NOT ALL PILES SHOWN
2. PILE LENGTH TO BE DETERMINED
3. SUPERSTRUCTURE CONSTRUCTION, UON
   SIMPLE SPANS - MSS OR FLPM
   CONTINUOUS SPANS - BCC - PRECAST IN-SITU
   STEEL TRUSS - INSITU, SLID OR LAUNCHED
   ELEVATED SLABS - PC BEAM AND INSITU SLAB
4. UTILITY LOCATIONS TO BE DETERMINED
5. ACCESS STAIRWAYS ARE PROVIDED AT SYSTEMS SITES (APPROX. 2.5 MILE INTERVALS). LADDER ACCESS TO VIADUCTS IS PROVIDED AT 2500 FT INTERVALS WITH ACCESS ROAD AND TURNING CIRCLE WHERE NECESSARY.

LEGEND:

(1) STRUCTURE APPROACH SLAB

(2) RETAINING WALL

* ESTIMATED 100-YEAR FLOOD ELEVATION, SEE "FRESNO TO BAKERSFIELD CORRIDOR HYDROLOGY, HYDRAULICS AND DRAINAGE 15% DRAFT REPORT".

CURVE DATA

(9)

R = 30500.00'

Δ = 49° 01' 18.3"

T = 13906.6'

L = 26095.5'

40 0 40 80
1"=40'

04/02/2014 - RFP No.: HSR 13-57

| REV | DATE | BY | CHK | APP | DESCRIPTION |
|---|---|---|---|---|---|

DESIGNED BY M. FISHER
DRAWN BY F. PALERMO
CHECKED BY A. ARMSTRONG
IN CHARGE R. COFFIN
DATE 12/31/13

**RECORD SET 15% DESIGN SUBMISSION - NOT FOR CONSTRUCTION**

URS | HMM | ARUP
CALIFORNIA HIGH-SPEED TRAIN

CALIFORNIA HIGH-SPEED RAIL AUTHORITY

**CALIFORNIA HIGH-SPEED TRAIN PROJECT**
**FRESNO TO BAKERSFIELD**
KAWEAH SUBSECTION
ALIGNMENT K4
CROSS CREEK VIADUCT
PLAN AND ELEVATION

CONTRACT NO. HSR 06-0003
DRAWING NO. SV2467
SCALE AS SHOWN
SHEET NO. 8 OF 13

andrew.armstrong 2/12/2013 2:05:40 PM c:\pwworking\hmm\external\andrew.armstrong-arup.com\d0125236\FB-SV-2467-K4.dgn

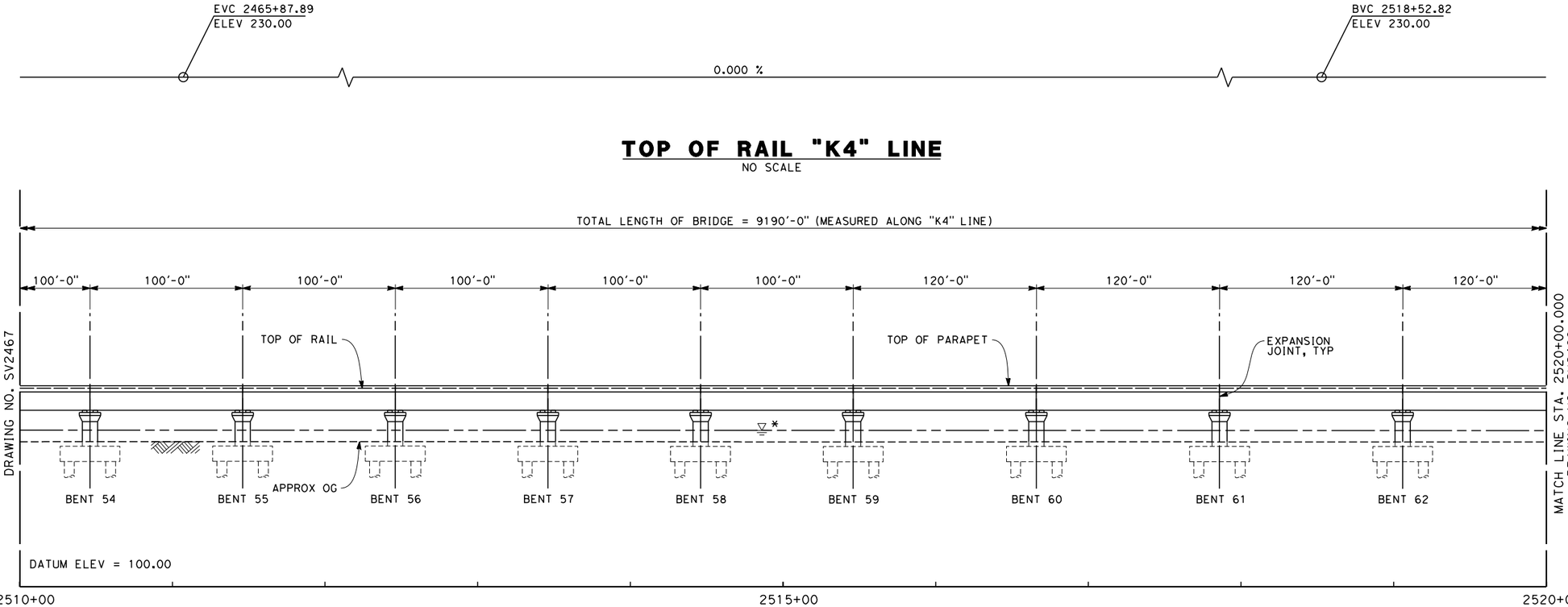


## TOP OF RAIL "K4" LINE
NO SCALE

## ELEVATION
SCALE 1" = 40'

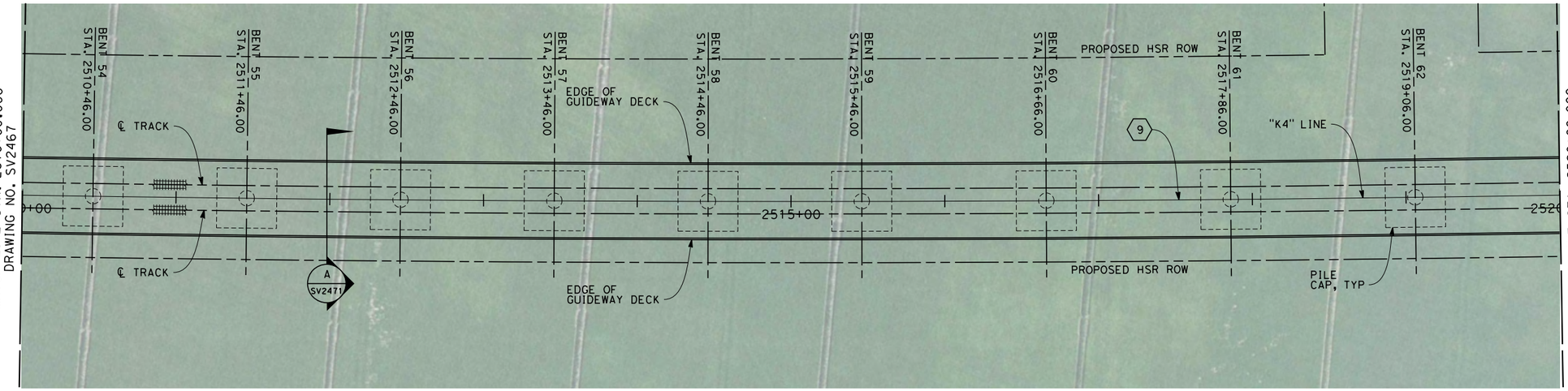


## PLAN
SCALE 1" = 40'

NOTES
1. NOT ALL PILES SHOWN
2. PILE LENGTH TO BE DETERMINED
3. SUPERSTRUCTURE CONSTRUCTION, UON
   SIMPLE SPANS - MSS OR FLPM
   CONTINUOUS SPANS - BCC - PRECAST IN-SITU
   STEEL TRUSS - INSITU, SLID OR LAUNCHED
   ELEVATED SLABS - PC BEAM AND INSITU SLAB
4. UTILITY LOCATIONS TO BE DETERMINED
5. ACCESS STAIRWAYS ARE PROVIDED AT SYSTEMS SITES (APPROX. 2.5 MILE INTERVALS). LADDER ACCESS TO VIADUCTS IS PROVIDED AT 2500 FT INTERVALS WITH ACCESS ROAD AND TURNING CIRCLE WHERE NECESSARY.

LEGEND:
1. STRUCTURE APPROACH SLAB
2. RETAINING WALL
* ESTIMATED 100-YEAR FLOOD ELEVATION, SEE "FRESNO TO BAKERSFIELD CORRIDOR HYDROLOGY, HYDRAULICS AND DRAINAGE 15% DRAFT REPORT".

CURVE DATA

9

R = 30500.00'
Δ = 49° 01' 18.3"
T = 13906.6'
L = 26095.5'

40 0 40 80
1"=40'

04/02/2014 - RFP No.: HSR 13-57

| REV | DATE | BY | CHK | APP | DESCRIPTION |
|---|---|---|---|---|---|

DESIGNED BY M. FISHER
DRAWN BY F. PALERMO
CHECKED BY A. ARMSTRONG
IN CHARGE R. COFFIN
DATE 12/31/13

RECORD SET 15% DESIGN SUBMISSION - NOT FOR CONSTRUCTION

URS | HMM | ARUP
CALIFORNIA HIGH-SPEED TRAIN

CALIFORNIA HIGH-SPEED RAIL AUTHORITY

**CALIFORNIA HIGH-SPEED TRAIN PROJECT**
**FRESNO TO BAKERSFIELD**
KAWEAH SUBSECTION
ALIGNMENT K4
CROSS CREEK VIADUCT
PLAN AND ELEVATION

CONTRACT NO. HSR 06-0003
DRAWING NO. SV2468
SCALE AS SHOWN
SHEET NO. 9 OF 13

andrew.armstrong\2/12/2013 2:06:00 PM c:\pwworking\hmm\external\andrew.armstrong-arup.com\d0125236\FB-SV-2468-K4.dgn

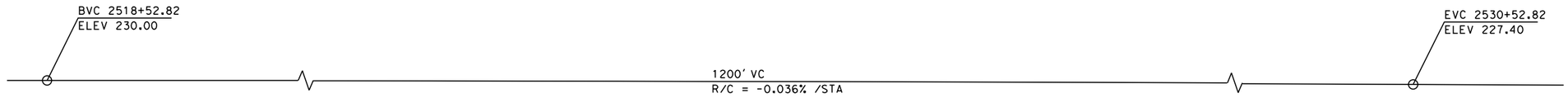


## TOP OF RAIL "K4" LINE
NO SCALE

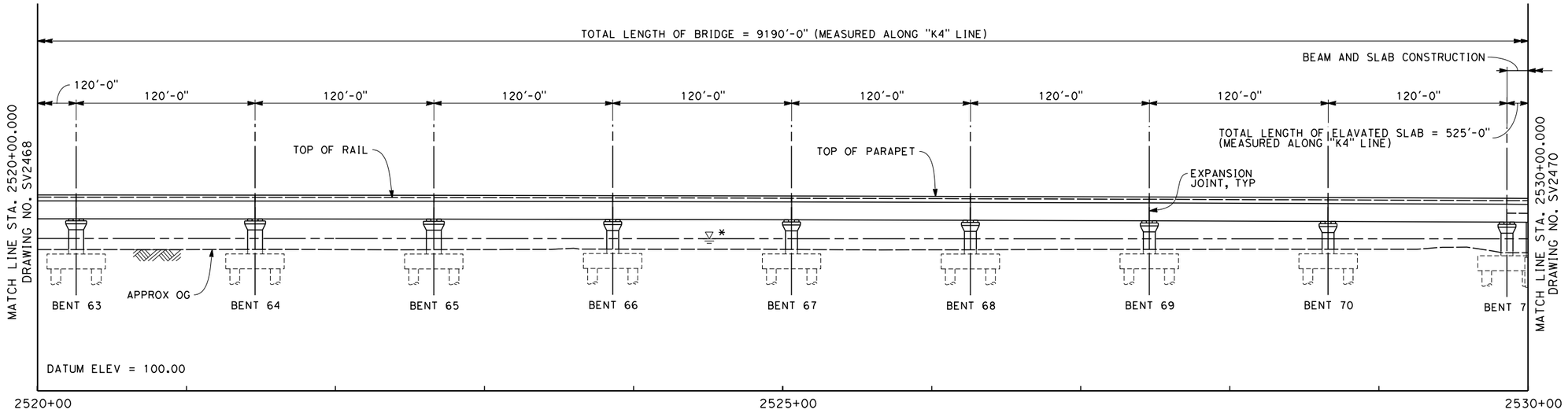


## ELEVATION
SCALE 1" = 40'

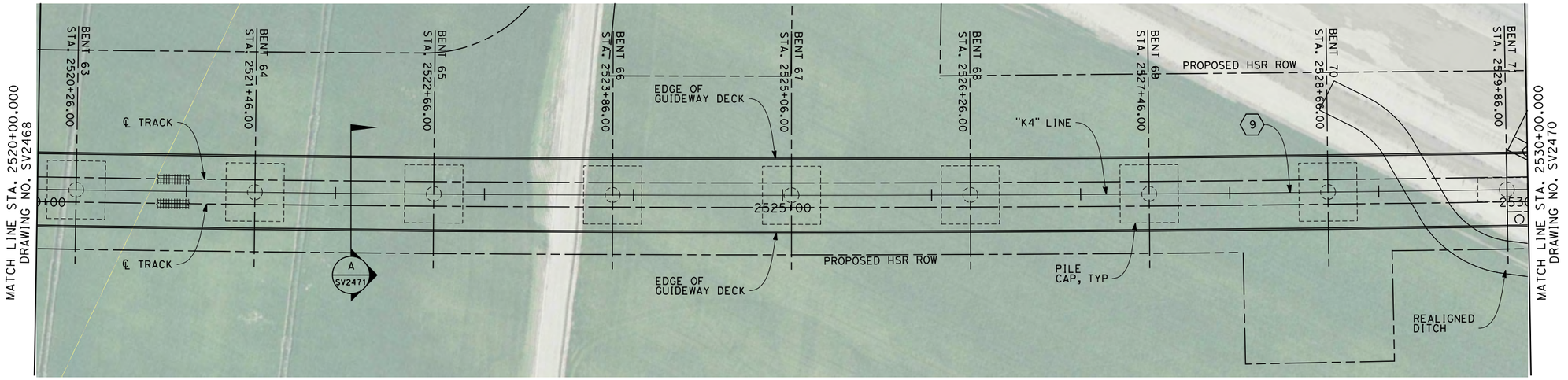


## PLAN
SCALE 1" = 40'

NOTES
1. NOT ALL PILES SHOWN
2. PILE LENGTH TO BE DETERMINED
3. SUPERSTRUCTURE CONSTRUCTION, UON
   SIMPLE SPANS - MSS OR FLPM
   CONTINUOUS SPANS - BCC - PRECAST IN-SITU
   STEEL TRUSS - INSITU, SLID OR LAUNCHED
   ELEVATED SLABS - PC BEAM AND INSITU SLAB
4. UTILITY LOCATIONS TO BE DETERMINED
5. ACCESS STAIRWAYS ARE PROVIDED AT SYSTEMS SITES (APPROX. 2.5 MILE INTERVALS). LADDER ACCESS TO VIADUCTS IS PROVIDED AT 2500 FT INTERVALS WITH ACCESS ROAD AND TURNING CIRCLE WHERE NECESSARY.

LEGEND:
1. STRUCTURE APPROACH SLAB
2. RETAINING WALL
* ESTIMATED 100-YEAR FLOOD ELEVATION, SEE "FRESNO TO BAKERSFIELD CORRIDOR HYDROLOGY, HYDRAULICS AND DRAINAGE 15% DRAFT REPORT".

CURVE DATA

9

R = 30500.00'
Δ = 49° 01' 18.3"
T = 13906.6'
L = 26095.5'

40 0 40 80
1"=40'

04/02/2014 - RFP No.: HSR 13-57

| REV | DATE | BY | CHK | APP | DESCRIPTION |
|---|---|---|---|---|---|

DESIGNED BY M. FISHER
DRAWN BY F. PALERMO
CHECKED BY A. ARMSTRONG
IN CHARGE R. COFFIN
DATE 12/31/13

RECORD SET 15% DESIGN SUBMISSION - NOT FOR CONSTRUCTION

URS | HMM | ARUP
California High-Speed Train

CALIFORNIA HIGH-SPEED RAIL AUTHORITY

# CALIFORNIA HIGH-SPEED TRAIN PROJECT
# FRESNO TO BAKERSFIELD
KAWEAH SUBSECTION
ALIGNMENT K4
CROSS CREEK VIADUCT
PLAN AND ELEVATION

CONTRACT NO. HSR 06-0003
DRAWING NO. SV2469
SCALE AS SHOWN
SHEET NO. 10 OF 13

andrew.armstrong\2/12/2013 2:06:22 PM c:\pwworking\hmm\external\andrew.armstrong-arup.com\d0125236\FB-SV-2469-K4.dgn

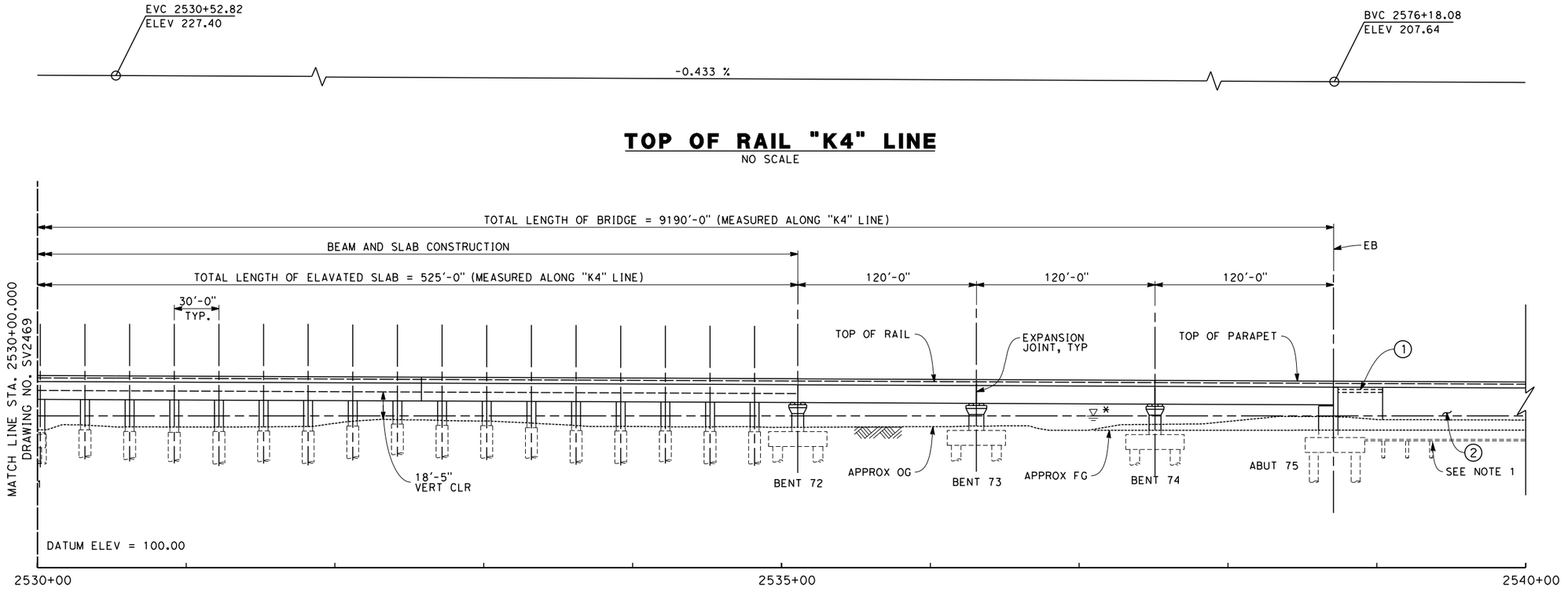


## TOP OF RAIL "K4" LINE
NO SCALE

## ELEVATION
SCALE 1" = 40'

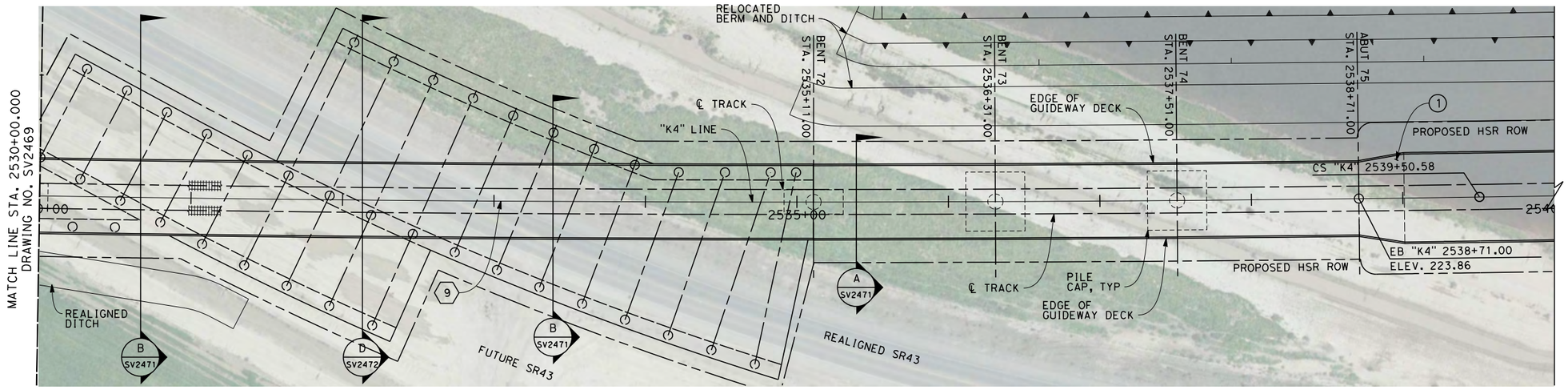


## PLAN
SCALE 1" = 40'

NOTES
1. NOT ALL PILES SHOWN
2. PILE LENGTH TO BE DETERMINED
3. SUPERSTRUCTURE CONSTRUCTION, UON
   SIMPLE SPANS - MSS OR FLPM
   CONTINUOUS SPANS - BCC - PRECAST IN-SITU
   STEEL TRUSS - INSITU, SLID OR LAUNCHED
   ELEVATED SLABS - PC BEAM AND INSITU SLAB
4. UTILITY LOCATIONS TO BE DETERMINED
5. ACCESS STAIRWAYS ARE PROVIDED AT SYSTEMS SITES (APPROX. 2.5 MILE INTERVALS). LADDER ACCESS TO VIADUCTS IS PROVIDED AT 2500 FT INTERVALS WITH ACCESS ROAD AND TURNING CIRCLE WHERE NECESSARY.

LEGEND:
(1) STRUCTURE APPROACH SLAB
(2) RETAINING WALL
* ESTIMATED 100-YEAR FLOOD ELEVATION, SEE "FRESNO TO BAKERSFIELD CORRIDOR HYDROLOGY, HYDRAULICS AND DRAINAGE 15% DRAFT REPORT".

CURVE DATA
(9)
R = 30500.00'
Δ = 49° 01' 18.3"
T = 13906.6'
L = 26095.5'

40 0 40 80
1"=40'

04/02/2014 - RFP No.: HSR 13-57

$USER$ $TIME$ $FILE$ $DATE$

| REV | DATE | BY | CHK | APP | DESCRIPTION |
|---|---|---|---|---|---|

DESIGNED BY M. FISHER
DRAWN BY F. PALERMO
CHECKED BY A. ARMSTRONG
IN CHARGE R. COFFIN
DATE 12/31/13

**RECORD SET 15% DESIGN SUBMISSION - NOT FOR CONSTRUCTION**

URS | HMM | ARUP
CALIFORNIA HIGH-SPEED TRAIN

CALIFORNIA HIGH-SPEED RAIL AUTHORITY

**CALIFORNIA HIGH-SPEED TRAIN PROJECT**
**FRESNO TO BAKERSFIELD**
KAWEAH SUBSECTION
ALIGNMENT K4
CROSS CREEK VIADUCT
PLAN AND ELEVATION

CONTRACT NO. HSR 06-0003
DRAWING NO. SV2470
SCALE AS SHOWN
SHEET NO. 11 OF 13

| COLUMN DIAMETERS | |
|---|---|
| HEIGHT TO SOFFIT | DIAMETER |
| 0-20 | 8 FT |
| 20-40 | 10 FT |
| 40-50 | 12 FT |
| 50-60 | 15 FT |
| 60-80 | 20 FT |
| 80-100 | 25 FT |

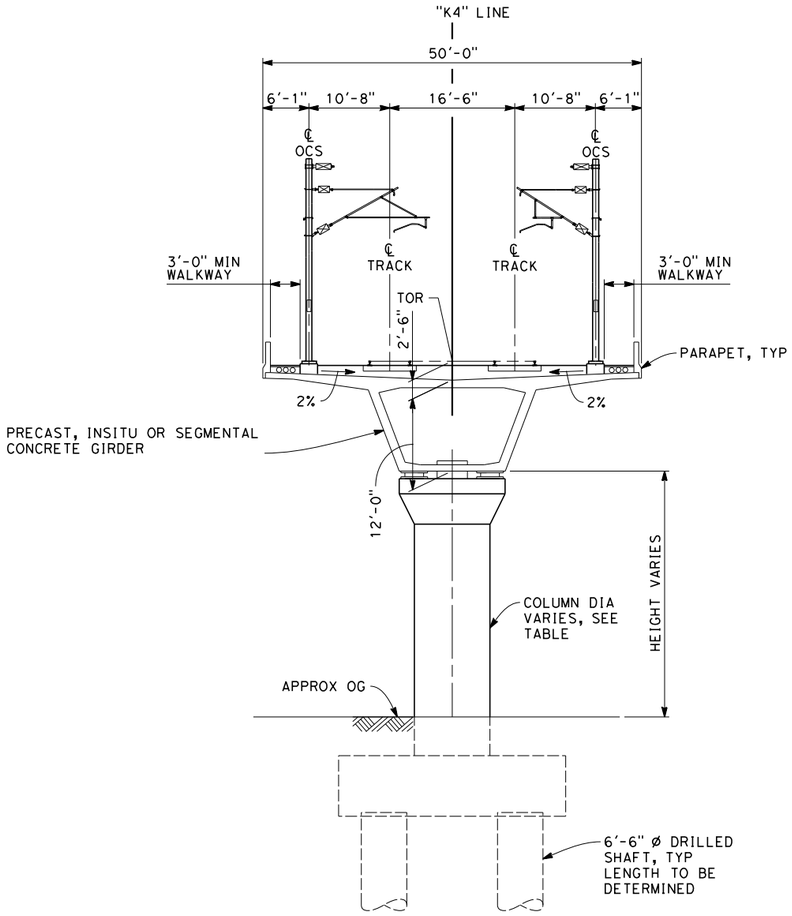


## SECTION A

SCALE: 1" = 10'

STA 2446+81.00 THROUGH 2479+22.50
STA 2482+44.50 THROUGH 2529+86.00
STA 2535+11.00 THROUGH 2538+71.00

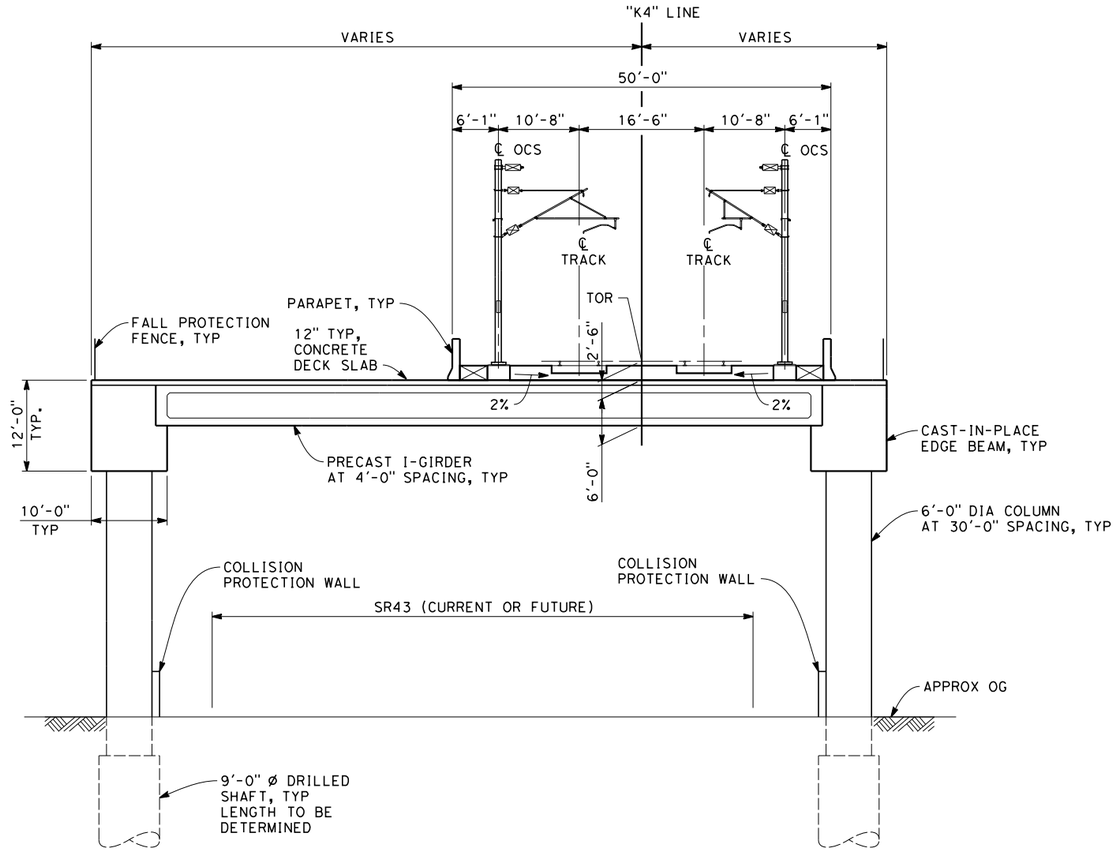


## SECTION B

SCALE: 1" = 10'

STA 2529+86.00 THROUGH 2531+50.00
STA 2532+80.00 THROUGH 2535+11.00

10 0 10 20
1"-10'

04/02/2014 - RFP No.: HSR 13-57

| REV | DATE | BY | CHK | APP | DESCRIPTION |
|---|---|---|---|---|---|

DESIGNED BY M. FISHER
DRAWN BY F. PALERMO
CHECKED BY A. ARMSTRONG
IN CHARGE R. COFFIN
DATE 12/31/13

**RECORD SET 15% DESIGN SUBMISSION - NOT FOR CONSTRUCTION**

URS | HMM | ARUP
CALIFORNIA HIGH-SPEED TRAIN

CALIFORNIA
HIGH-SPEED RAIL AUTHORITY

# CALIFORNIA HIGH-SPEED TRAIN PROJECT
# FRESNO TO BAKERSFIELD

KAWEAH SUBSECTION
ALIGNMENT K4
CROSS CREEK VIADUCT
TYPICAL SECTIONS

CONTRACT NO. HSR 06-0003
DRAWING NO. SV2471
SCALE AS SHOWN
SHEET NO. 12 OF 13

andrew.armstrong| 2/12/2013 2:06:51 PM c:\pwworking\hmm\external\andrew.armstrong-arup.com\d0125236\FB-SV-2471-K4.dgn

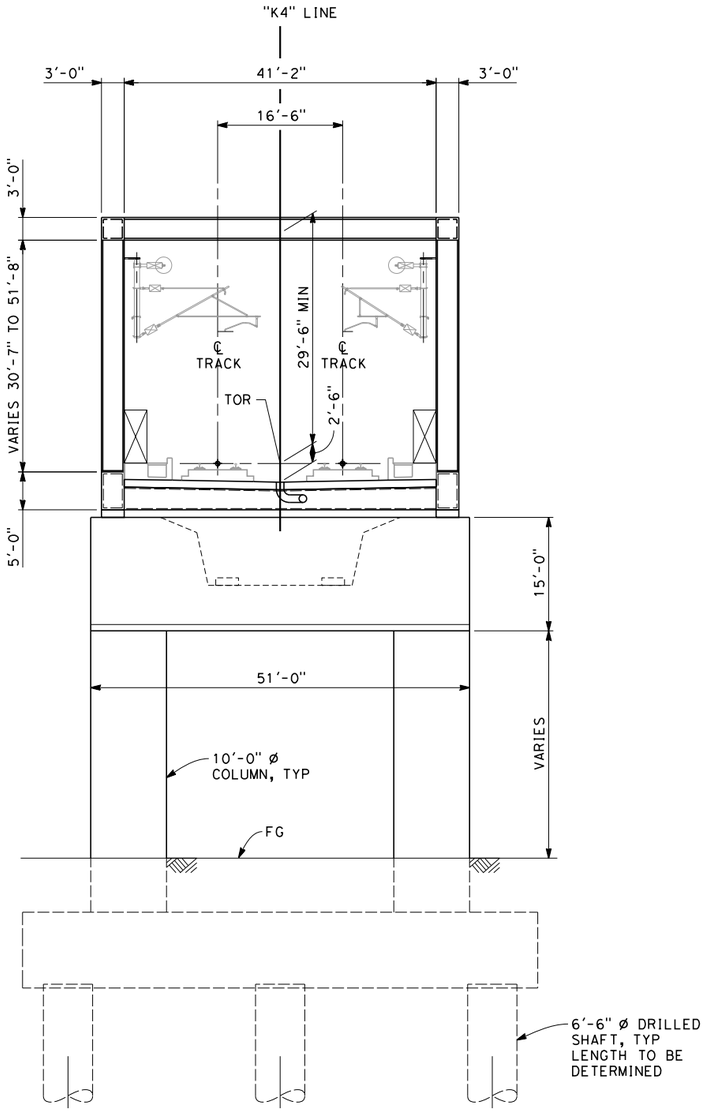


## SECTION C

SCALE: 1" = 10'

STA 2479+22.50 THROUGH 2482+44.50

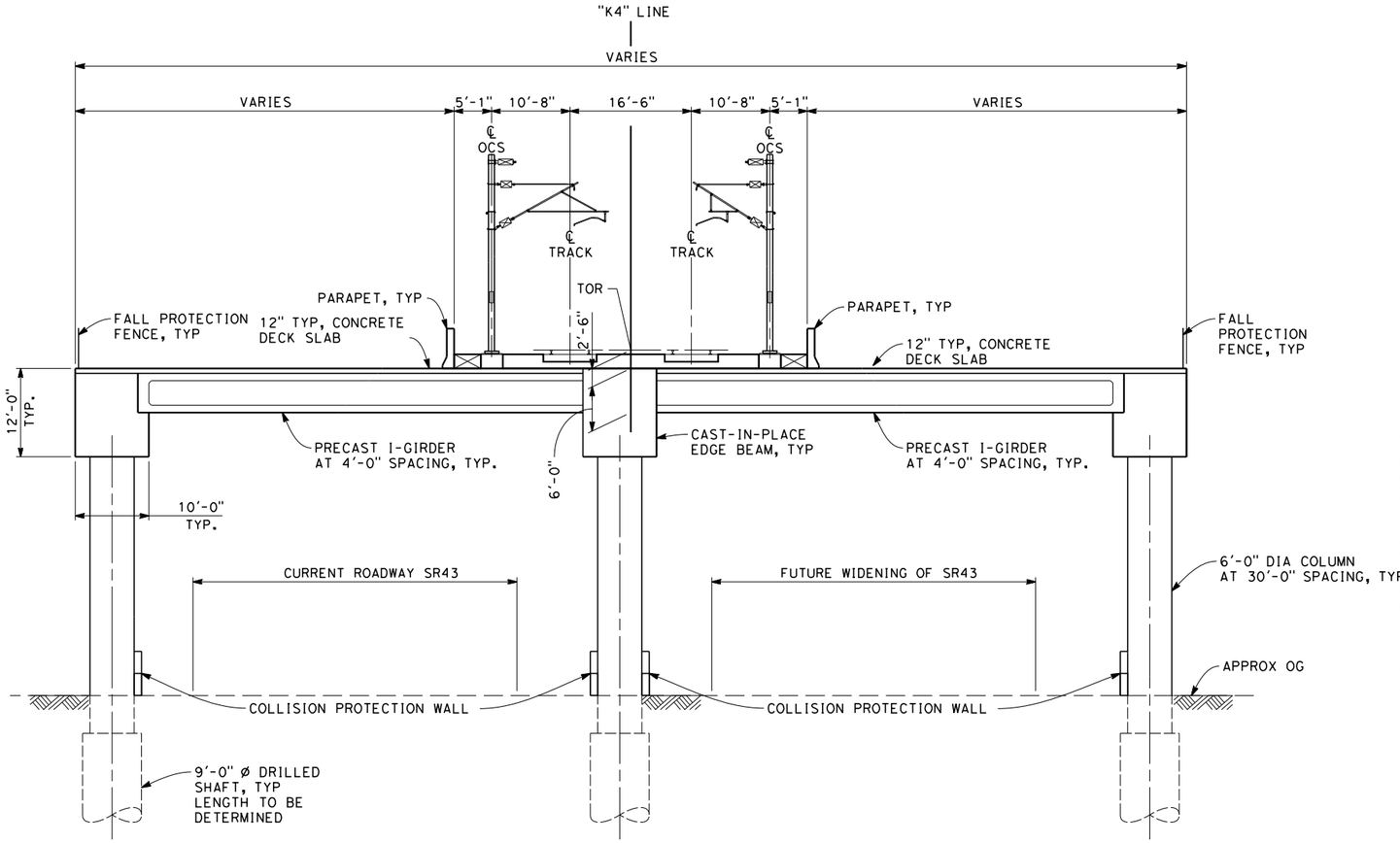


## SECTION D

SCALE: 1" = 10'

STA 2531+50.00 THROUGH 2532+80.00

10 0 10 20
1"=10'

04/02/2014 - RFP No.: HSR 13-57

| REV | DATE | BY | CHK | APP | DESCRIPTION |
|---|---|---|---|---|---|

DESIGNED BY M. FISHER
DRAWN BY F. PALERMO
CHECKED BY A. ARMSTRONG
IN CHARGE R. COFFIN
DATE 12/31/13

**RECORD SET 15% DESIGN SUBMISSION - NOT FOR CONSTRUCTION**

URS | HMM | ARUP
California High-Speed Train

CALIFORNIA HIGH-SPEED RAIL AUTHORITY

**CALIFORNIA HIGH-SPEED TRAIN PROJECT**
**FRESNO TO BAKERSFIELD**
KAWEAH SUBSECTION
ALIGNMENT K4
CROSS CREEK VIADUCT
TYPICAL SECTIONS

CONTRACT NO. HSR 06-0003
DRAWING NO. SV2472
SCALE AS SHOWN
SHEET NO. 13 OF 13

andrew.armstrong2/12/2013 2:06:56 PM c:\pwworking\hmm\external\andrew.armstrong-arup.com\d0125236\FB-SV-2472-K4.dgn

| REV | DATE | BY | CHK | APP | DESCRIPTION |
|---|---|---|---|---|---|
| | | | | | |

DESIGNED BY Y. REN
DRAWN BY F. PALERMO
CHECKED BY A. ARMSTRONG
IN CHARGE R. COFFIN
DATE 12/31/13

**RECORD SET 15% DESIGN SUBMISSION - NOT FOR CONSTRUCTION**

URS | HMM | ARUP
California High-Speed Train

CALIFORNIA HIGH-SPEED RAIL AUTHORITY

# CALIFORNIA HIGH-SPEED TRAIN PROJECT
# FRESNO TO BAKERSFIELD

CORCORAN BYPASS SUBSECTION
ALIGNMENT C2
WHITLEY AVE/SR137 UNDERPASS
KEY MAP

CONTRACT NO. HSR 06-0003
DRAWING NO. SV2445
SCALE AS SHOWN
SHEET NO. 1 OF 2

04/02/2014 - RFP No.: HSR 13-57

andrew.armstrong 2/12/2013 11:15:56 AM c:\pwworking\hmm\external\andrew.armstrong-arup.com\d0125238\FB-SV-2445-C2.dgn

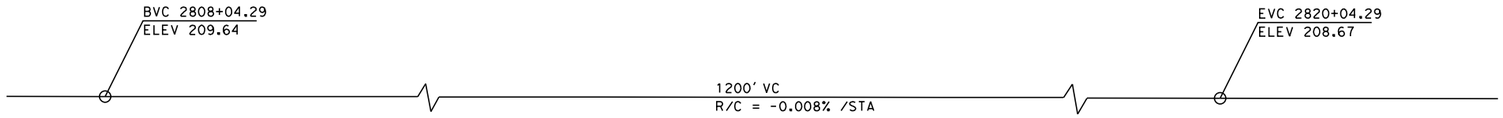


## TOP OF RAIL "C2" LINE
NO SCALE

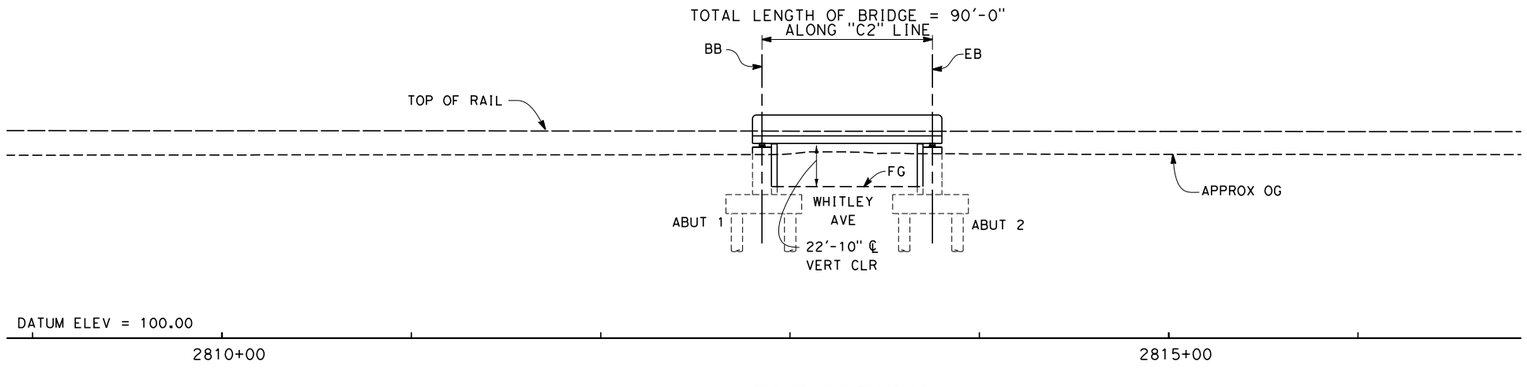


## ELEVATION
SCALE 1" = 40'

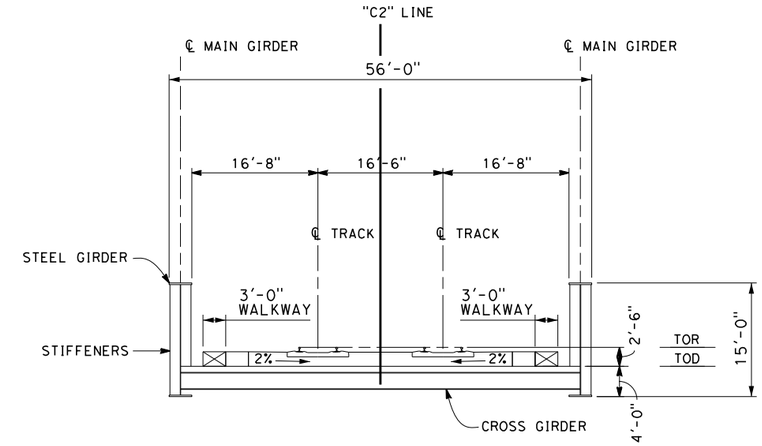


## TYPICAL SECTION
SCALE 1" = 10'

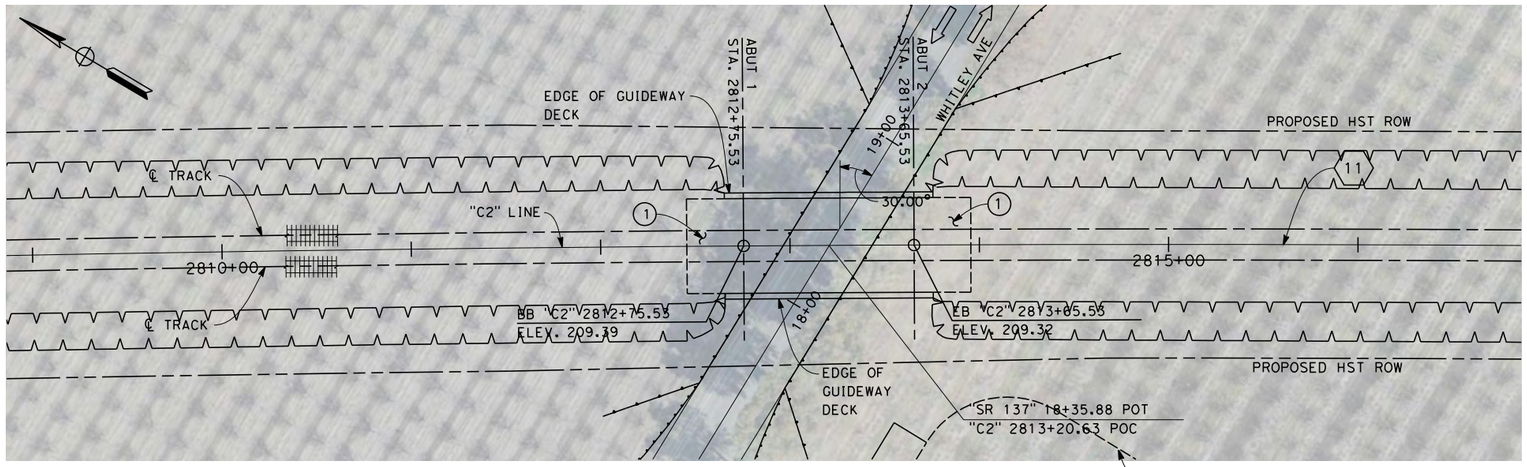


## PLAN
SCALE 1" = 40'

NOTES
1. NOT ALL PILES SHOWN
2. PILE LENGTH TO BE DETERMINED
3. UTILITY LOCATIONS TO BE DETERMINED

LEGEND:
- (1) STRUCTURE APPROACH SLAB
- (2) RETAINING WALL
- * ESTIMATED 100-YEAR FLOOD ELEVATION, SEE "FRESNO TO BAKERSFIELD CORRIDOR HYDROLOGY, HYDRAULICS AND DRAINAGE 15% DRAFT REPORT".
- INDICATES RAILROAD AND HIGH-SPEED TRAIN TRACK

CURVE DATA

(11)

R = 32000.00'
Δ = 0° 50' 01.6"
T = 618.5'
L = 15313.7'

10 0 10 20 — 1"=10'

40 0 40 80 — 1"=40'

| REV | DATE | BY | CHK | APP | DESCRIPTION |
|---|---|---|---|---|---|

DESIGNED BY M. FISHER
DRAWN BY F. PALERMO
CHECKED BY A. ARMSTRONG
IN CHARGE R. COFFIN
DATE 12/31/13

**RECORD SET 15% DESIGN SUBMISSION - NOT FOR CONSTRUCTION**

URS | HMM | ARUP
California High-Speed Train

CALIFORNIA HIGH-SPEED RAIL AUTHORITY

# CALIFORNIA HIGH-SPEED TRAIN PROJECT FRESNO TO BAKERSFIELD
CORCORAN BYPASS SUBSECTION
ALIGNMENT C2
WHITLEY AVE/SR137 UNDERPASS
PLAN AND ELEVATION

CONTRACT NO. HSR 06-0003
DRAWING NO. SV2446
SCALE AS SHOWN
SHEET NO. 2 OF 2

04/02/2014 - RFP No.: HSR 13-57

andrew.armstrong\12/2013 11:16:52 AM c:\pwworking\hmm\external\andrew.armstrong-arup.com\d0125238\FB-SV-2446-C2.dgn

| REV | DATE | BY | CHK | APP | DESCRIPTION |
|---|---|---|---|---|---|
| | | | | | |

DESIGNED BY M. FISHER
DRAWN BY F. PALERMO
CHECKED BY A. ARMSTRONG
IN CHARGE R. COFFIN
DATE 12/31/13

**RECORD SET 15% DESIGN SUBMISSION - NOT FOR CONSTRUCTION**

URS | HMM | ARUP
California High-Speed Train

CALIFORNIA
HIGH-SPEED RAIL AUTHORITY

# CALIFORNIA HIGH-SPEED TRAIN PROJECT
# FRESNO TO BAKERSFIELD
CORCORAN BYPASS SUBSECTION
ALIGNMENT C2
STATE ROUTE 43 BNSF VIADUCT
KEY MAP

CONTRACT NO. HSR 06-0003
DRAWING NO. SV2490
SCALE AS SHOWN
SHEET NO. 1 OF 11

04/02/2014 - RFP No.: HSR 13-57

andrew.armstrong2/12/2013 11:17:04 AM c:\pwworking\hmm\external\andrew.armstrong-arup.com\d0125238\FB-SV-2490-C2.dgn

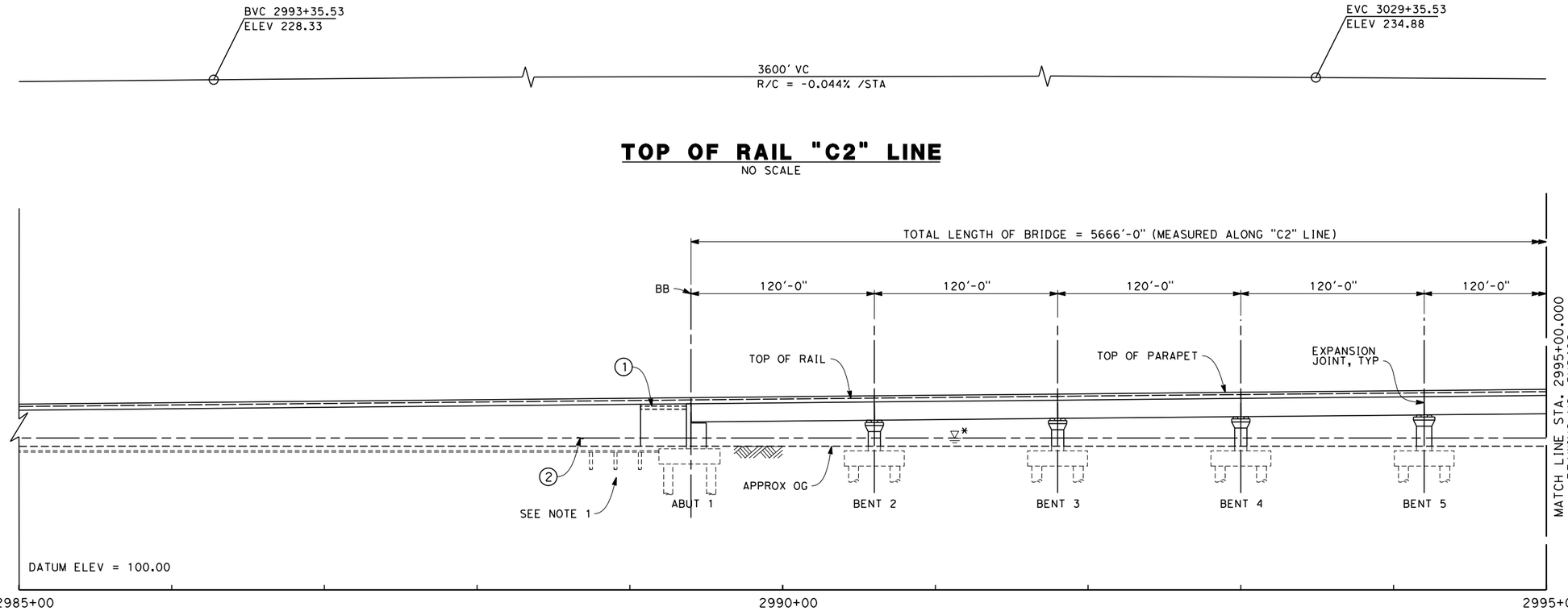


## TOP OF RAIL "C2" LINE
NO SCALE




## ELEVATION
SCALE 1" = 40'

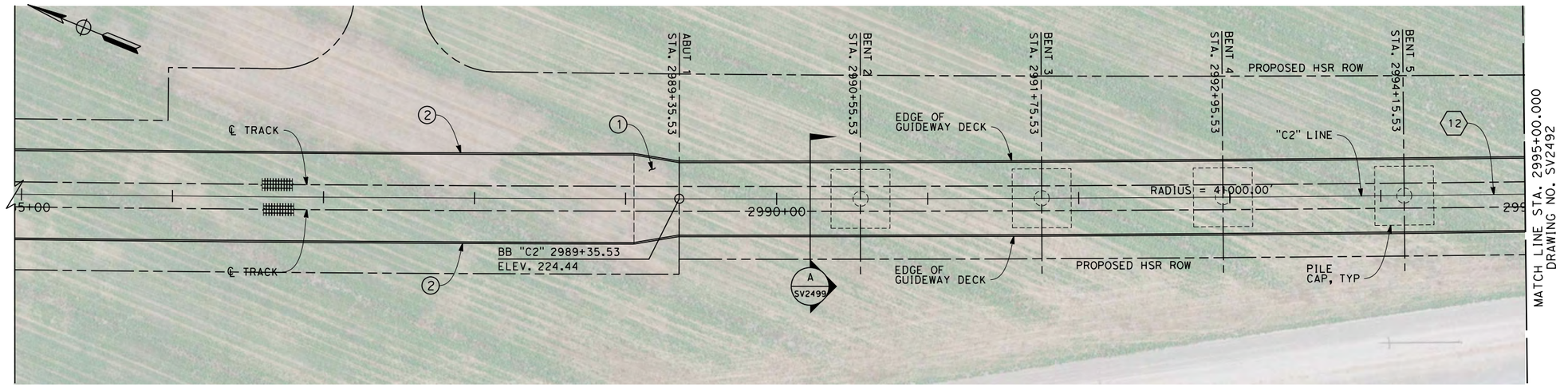


## PLAN
SCALE 1" = 40'

NOTES
1. NOT ALL PILES SHOWN
2. PILE LENGTH TO BE DETERMINED
3. SUPERSTRUCTURE CONSTRUCTION, UON
   SIMPLE SPANS - MSS OR FLPM
   CONTINUOUS SPANS - BCC - PRECAST IN-SITU
   STEEL TRUSS - INSITU, SLID OR LAUNCHED
   ELEVATED SLABS - PC BEAM AND INSITU SLAB
4. UTILITY LOCATIONS TO BE DETERMINED
5. ACCESS STAIRWAYS ARE PROVIDED AT SYSTEMS SITES (APPROX. 2.5 MILE INTERVALS). LADDER ACCESS TO VIADUCTS IS PROVIDED AT 2500 FT INTERVALS WITH ACCESS ROAD AND TURNING CIRCLE WHERE NECESSARY.

LEGEND:
1. STRUCTURE APPROACH SLAB
2. RETAINING WALL
* ESTIMATED 100-YEAR FLOOD ELEVATION, SEE "FRESNO TO BAKERSFIELD CORRIDOR HYDROLOGY, HYDRAULICS AND DRAINAGE 15% DRAFT REPORT".

CURVE DATA

⬡12

R = 41000.00'
Δ = 01° 14' 39.4"
T = 1846.0'
L = 9734.5'

40 0 40 80
1"=40'

04/02/2014 - RFP No.: HSR 13-57

| REV | DATE | BY | CHK | APP | DESCRIPTION |
|---|---|---|---|---|---|

DESIGNED BY M. FISHER
DRAWN BY F. PALERMO
CHECKED BY A. ARMSTRONG
IN CHARGE R. COFFIN
DATE 12/31/13

RECORD SET 15% DESIGN SUBMISSION - NOT FOR CONSTRUCTION

URS | HMM | ARUP
California High-Speed Train

CALIFORNIA HIGH-SPEED RAIL AUTHORITY

**CALIFORNIA HIGH-SPEED TRAIN PROJECT**
**FRESNO TO BAKERSFIELD**
CORCORAN BYPASS SUBSECTION
ALIGNMENT C2
STATE ROUTE 43 BNSF VIADUCT
PLAN AND ELEVATION

CONTRACT NO. HSR 06-0003
DRAWING NO. SV2491
SCALE AS SHOWN
SHEET NO. 2 OF 11

andrew.armstrong\ 2/12/2013 11:17:31 AM c:\pwworking\hmm\external\andrew.armstrong-arup.com\d0125238\FB-SV-2491-C2.dgn

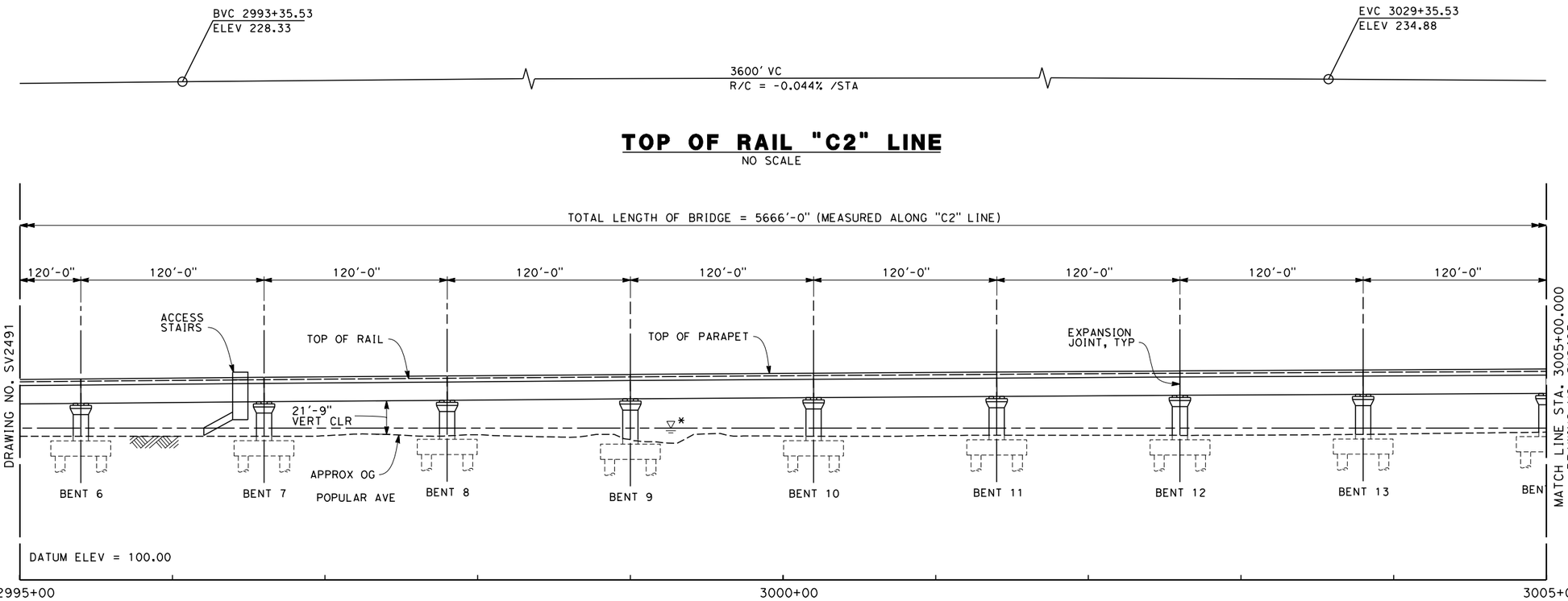


## TOP OF RAIL "C2" LINE

NO SCALE

## ELEVATION

SCALE 1" = 40'

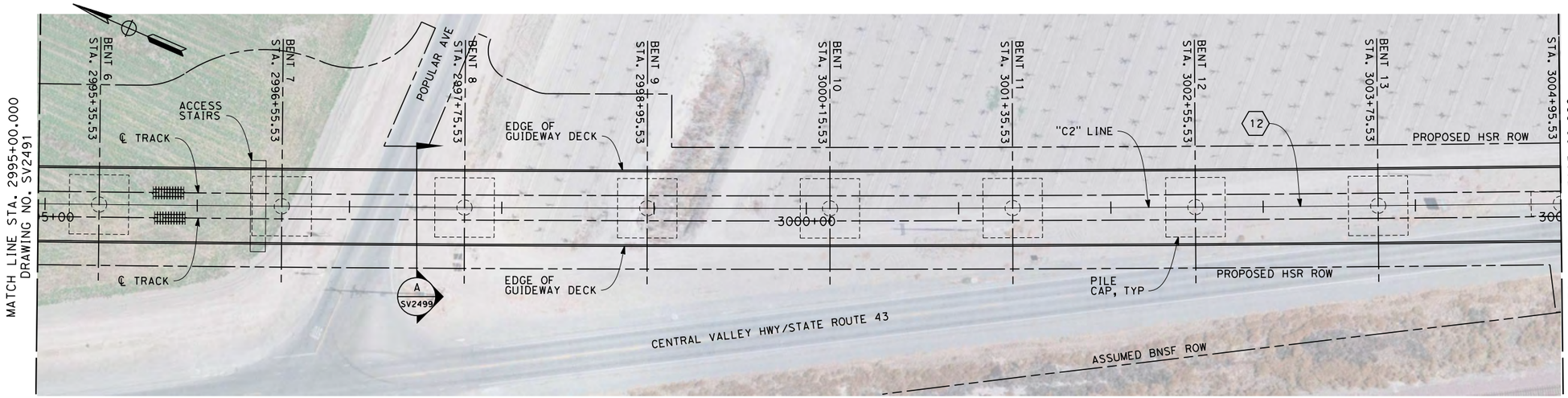


## PLAN

SCALE 1" = 40'

NOTES

1. NOT ALL PILES SHOWN
2. PILE LENGTH TO BE DETERMINED
3. SUPERSTRUCTURE CONSTRUCTION, UON
   SIMPLE SPANS - MSS OR FLPM
   CONTINUOUS SPANS - BCC - PRECAST IN-SITU
   STEEL TRUSS - INSITU, SLID OR LAUNCHED
   ELEVATED SLABS - PC BEAM AND INSITU SLAB
4. UTILITY LOCATIONS TO BE DETERMINED
5. ACCESS STAIRWAYS ARE PROVIDED AT SYSTEMS SITES (APPROX. 2.5 MILE INTERVALS). LADDER ACCESS TO VIADUCTS IS PROVIDED AT 2500 FT INTERVALS WITH ACCESS ROAD AND TURNING CIRCLE WHERE NECESSARY.

LEGEND:

(1) STRUCTURE APPROACH SLAB

(2) RETAINING WALL

* ESTIMATED 100-YEAR FLOOD ELEVATION, SEE "FRESNO TO BAKERSFIELD CORRIDOR HYDROLOGY, HYDRAULICS AND DRAINAGE 15% DRAFT REPORT".

CURVE DATA

(12)

R = 41000.00'
Δ = 01° 14' 39.4"
T = 1846.0'
L = 9734.5'

40 0 40 80
1"=40'

04/02/2014 - RFP No.: HSR 13-57

| REV | DATE | BY | CHK | APP | DESCRIPTION |
|---|---|---|---|---|---|

DESIGNED BY M. FISHER
DRAWN BY F. PALERMO
CHECKED BY A. ARMSTRONG
IN CHARGE R. COFFIN
DATE 12/31/13

**RECORD SET 15% DESIGN SUBMISSION - NOT FOR CONSTRUCTION**

URS | HMM | ARUP
CALIFORNIA HIGH-SPEED TRAIN

CALIFORNIA HIGH-SPEED RAIL AUTHORITY

**CALIFORNIA HIGH-SPEED TRAIN PROJECT**
**FRESNO TO BAKERSFIELD**
CORCORAN BYPASS SUBSECTION
ALIGNMENT C2
STATE ROUTE 43 BNSF VIADUCT
PLAN AND ELEVATION

CONTRACT NO. HSR 06-0003
DRAWING NO. SV2492
SCALE AS SHOWN
SHEET NO. 3 OF 11

andrew.armstrong 12/12/2013 11:17:50 AM c:\pwworking\hmm\external\andrew.armstrong-arup.com\d0125238\FB-SV-2492-C2.dgn

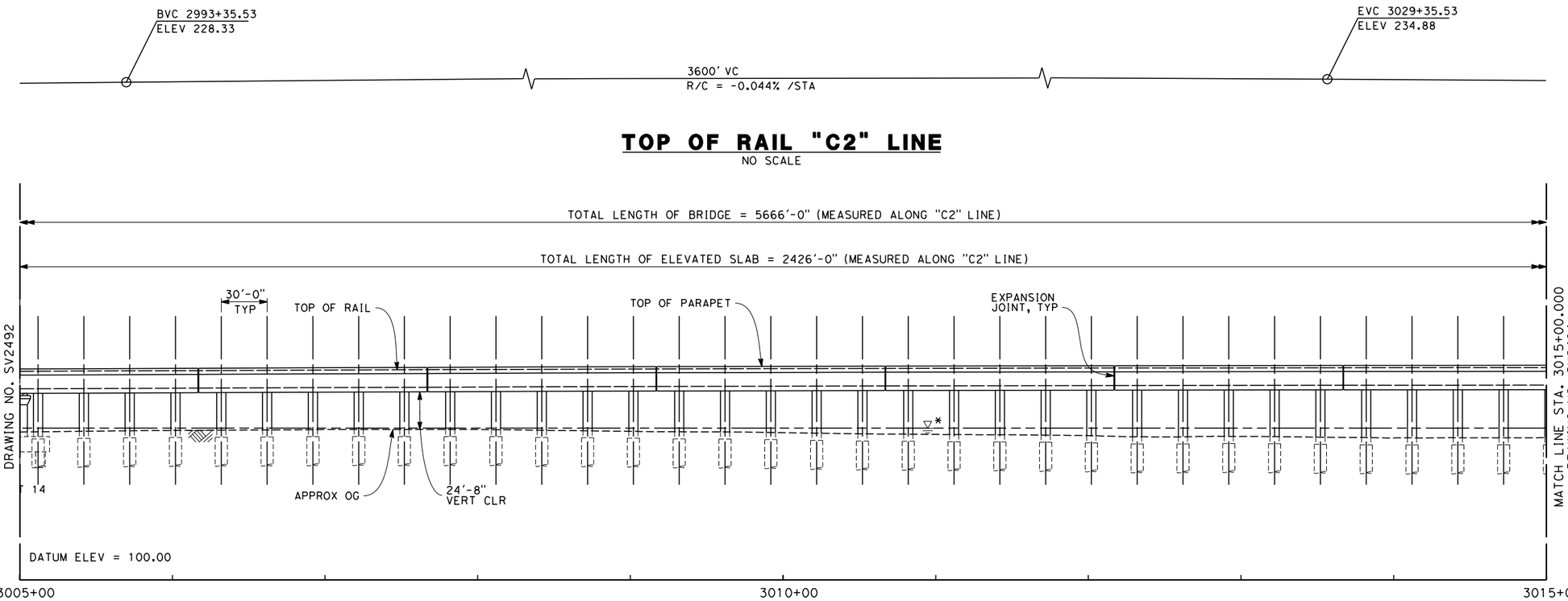


## TOP OF RAIL "C2" LINE
NO SCALE

## ELEVATION
SCALE 1" = 40'

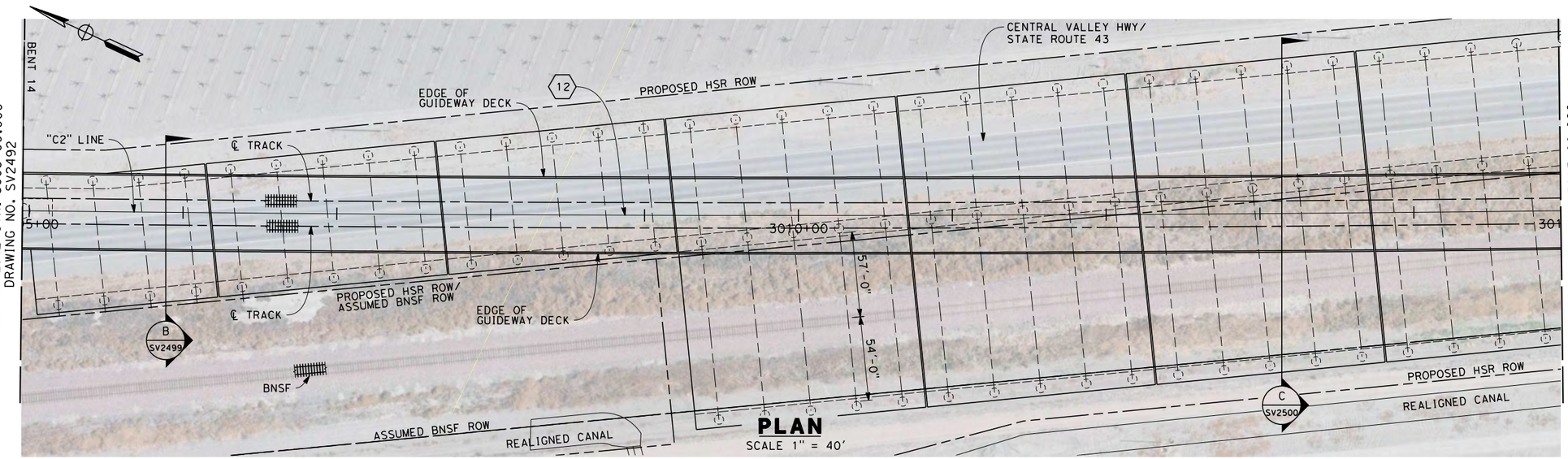


## PLAN
SCALE 1" = 40'

NOTES
1. NOT ALL PILES SHOWN
2. PILE LENGTH TO BE DETERMINED
3. SUPERSTRUCTURE CONSTRUCTION, UON
   SIMPLE SPANS - MSS OR FLPM
   CONTINUOUS SPANS - BCC - PRECAST IN-SITU
   STEEL TRUSS - INSITU, SLID OR LAUNCHED
   ELEVATED SLABS - PC BEAM AND INSITU SLAB
4. UTILITY LOCATIONS TO BE DETERMINED
5. ACCESS STAIRWAYS ARE PROVIDED AT SYSTEMS SITES (APPROX. 2.5 MILE INTERVALS). LADDER ACCESS TO VIADUCTS IS PROVIDED AT 2500 FT INTERVALS WITH ACCESS ROAD AND TURNING CIRCLE WHERE NECESSARY.

LEGEND:
1. STRUCTURE APPROACH SLAB
2. RETAINING WALL
* ESTIMATED 100-YEAR FLOOD ELEVATION, SEE "FRESNO TO BAKERSFIELD CORRIDOR HYDROLOGY, HYDRAULICS AND DRAINAGE 15% DRAFT REPORT".

CURVE DATA

12

R = 41000.00'
Δ = 01° 14' 39.4"
T = 1846.0'
L = 9734.5'

40 0 40 80
1"=40'

04/02/2014 - RFP No.: HSR 13-57

| REV | DATE | BY | CHK | APP | DESCRIPTION |
|---|---|---|---|---|---|

DESIGNED BY M. FISHER
DRAWN BY F. PALERMO
CHECKED BY A. ARMSTRONG
IN CHARGE R. COFFIN
DATE 12/31/13

RECORD SET 15% DESIGN SUBMISSION - NOT FOR CONSTRUCTION

URS | HMM | ARUP
CALIFORNIA HIGH-SPEED TRAIN

CALIFORNIA HIGH-SPEED RAIL AUTHORITY

**CALIFORNIA HIGH-SPEED TRAIN PROJECT**
**FRESNO TO BAKERSFIELD**
CORCORAN BYPASS SUBSECTION
ALIGNMENT C2
STATE ROUTE 43 BNSF VIADUCT
PLAN AND ELEVATION

CONTRACT NO. HSR 06-0003
DRAWING NO. SV2493
SCALE AS SHOWN
SHEET NO. 4 OF 11

andrew.armstrong\2/12/2013 11:18:13 AM c:\pwworking\hmm\external\andrew.armstrong-arup.com\d0125238\FB-SV-2493-C2.dgn

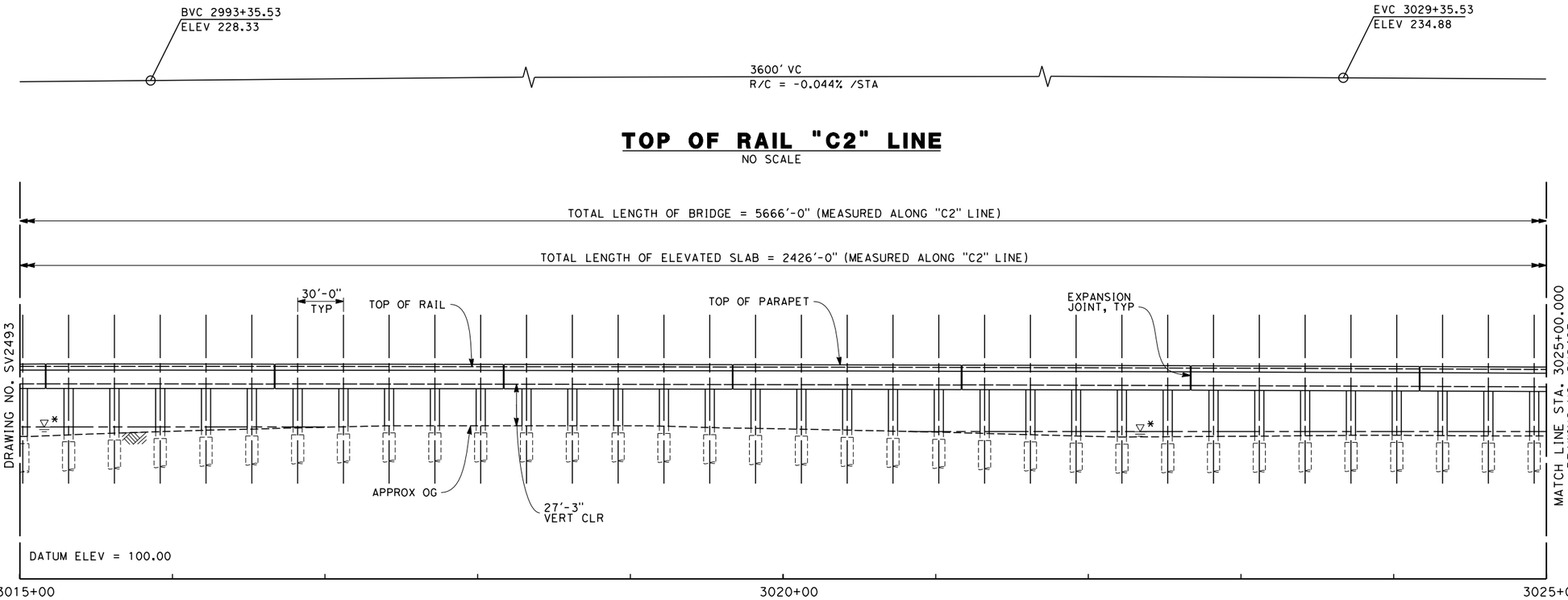


## TOP OF RAIL "C2" LINE

NO SCALE

## ELEVATION

SCALE 1" = 40'

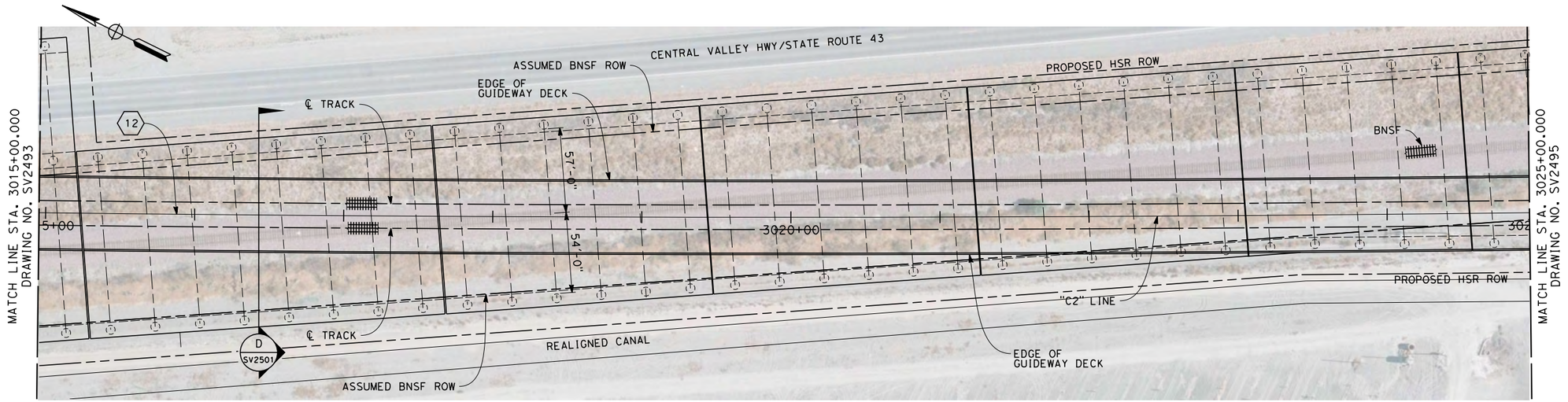


## PLAN

SCALE 1" = 40'

NOTES

1. NOT ALL PILES SHOWN
2. PILE LENGTH TO BE DETERMINED
3. SUPERSTRUCTURE CONSTRUCTION, UON
   SIMPLE SPANS - MSS OR FLPM
   CONTINUOUS SPANS - BCC - PRECAST IN-SITU
   STEEL TRUSS - INSITU, SLID OR LAUNCHED
   ELEVATED SLABS - PC BEAM AND INSITU SLAB
4. UTILITY LOCATIONS TO BE DETERMINED
5. ACCESS STAIRWAYS ARE PROVIDED AT SYSTEMS SITES (APPROX. 2.5 MILE INTERVALS). LADDER ACCESS TO VIADUCTS IS PROVIDED AT 2500 FT INTERVALS WITH ACCESS ROAD AND TURNING CIRCLE WHERE NECESSARY.

LEGEND:

(1) STRUCTURE APPROACH SLAB

(2) RETAINING WALL

* ESTIMATED 100-YEAR FLOOD ELEVATION, SEE "FRESNO TO BAKERSFIELD CORRIDOR HYDROLOGY, HYDRAULICS AND DRAINAGE 15% DRAFT REPORT".

CURVE DATA

(12)

R = 41000.00'
Δ = 01° 14' 39.4"
T = 1846.0'
L = 9734.5'

40 0 40 80
1"=40'

04/02/2014 - RFP No.: HSR 13-57

| REV | DATE | BY | CHK | APP | DESCRIPTION |
|---|---|---|---|---|---|

DESIGNED BY M. FISHER
DRAWN BY F. PALERMO
CHECKED BY A. ARMSTRONG
IN CHARGE R. COFFIN
DATE 12/31/13

**RECORD SET 15% DESIGN SUBMISSION - NOT FOR CONSTRUCTION**

URS | HMM | ARUP
CALIFORNIA HIGH-SPEED TRAIN

CALIFORNIA HIGH-SPEED RAIL AUTHORITY

**CALIFORNIA HIGH-SPEED TRAIN PROJECT**
**FRESNO TO BAKERSFIELD**
CORCORAN BYPASS SUBSECTION
ALIGNMENT C2
STATE ROUTE 43 BNSF VIADUCT
PLAN AND ELEVATION

CONTRACT NO. HSR 06-0003
DRAWING NO. SV2494
SCALE AS SHOWN
SHEET NO. 5 OF 11

andrew.armstrong\ 2/12/2013 11:18:32 AM c:\pwworking\hmm\external\andrew.armstrong-arup.com\d0125238\FB-SV-2494-C2.dgn

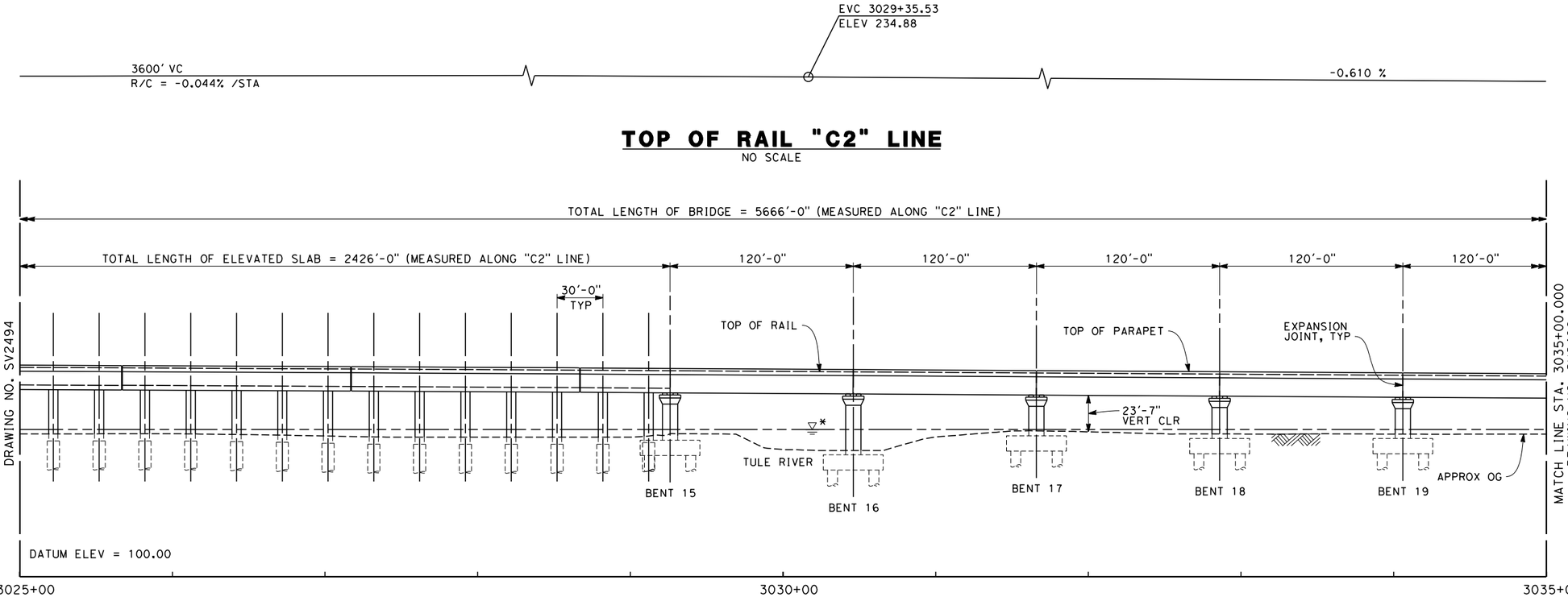


## TOP OF RAIL "C2" LINE

NO SCALE

## ELEVATION

SCALE 1" = 40'

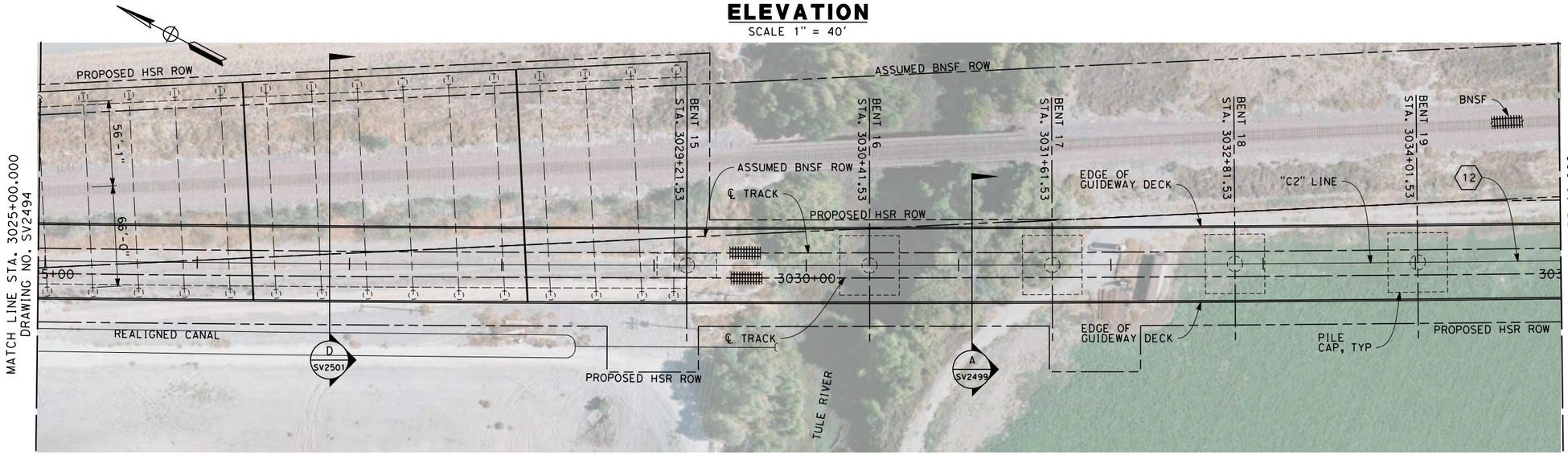


## PLAN

SCALE 1" = 40'

NOTES

1. NOT ALL PILES SHOWN
2. PILE LENGTH TO BE DETERMINED
3. SUPERSTRUCTURE CONSTRUCTION, UON
   SIMPLE SPANS - MSS OR FLPM
   CONTINUOUS SPANS - BCC - PRECAST IN-SITU
   STEEL TRUSS - INSITU, SLID OR LAUNCHED
   ELEVATED SLABS - PC BEAM AND INSITU SLAB
4. UTILITY LOCATIONS TO BE DETERMINED
5. ACCESS STAIRWAYS ARE PROVIDED AT SYSTEMS SITES (APPROX. 2.5 MILE INTERVALS). LADDER ACCESS TO VIADUCTS IS PROVIDED AT 2500 FT INTERVALS WITH ACCESS ROAD AND TURNING CIRCLE WHERE NECESSARY.

LEGEND:

(1) STRUCTURE APPROACH SLAB

(2) RETAINING WALL

* ESTIMATED 100-YEAR FLOOD ELEVATION, SEE "FRESNO TO BAKERSFIELD CORRIDOR HYDROLOGY, HYDRAULICS AND DRAINAGE 15% DRAFT REPORT".

CURVE DATA

(12)

R = 41000.00'
Δ = 01° 14' 39.4"
T = 1846.0'
L = 9734.5'

40 0 40 80
1"=40'

04/02/2014 - RFP No.: HSR 13-57

| REV | DATE | BY | CHK | APP | DESCRIPTION |
|---|---|---|---|---|---|

DESIGNED BY M. FISHER
DRAWN BY F. PALERMO
CHECKED BY A. ARMSTRONG
IN CHARGE R. COFFIN
DATE 12/31/13

**RECORD SET 15% DESIGN SUBMISSION - NOT FOR CONSTRUCTION**

URS | HMM | ARUP
CALIFORNIA HIGH-SPEED TRAIN

CALIFORNIA HIGH-SPEED RAIL AUTHORITY

**CALIFORNIA HIGH-SPEED TRAIN PROJECT**
**FRESNO TO BAKERSFIELD**
CORCORAN BYPASS SUBSECTION
ALIGNMENT C2
STATE ROUTE 43 BNSF VIADUCT
PLAN AND ELEVATION

CONTRACT NO. HSR 06-0003
DRAWING NO. SV2495
SCALE AS SHOWN
SHEET NO. 6 OF 11

frank.palermo 12/28/2013 2:33:31 PM c:\pwworking\hmm\external\frank.palermo01-arup.com\d0125238\FB-SV-2495-C2.dgn

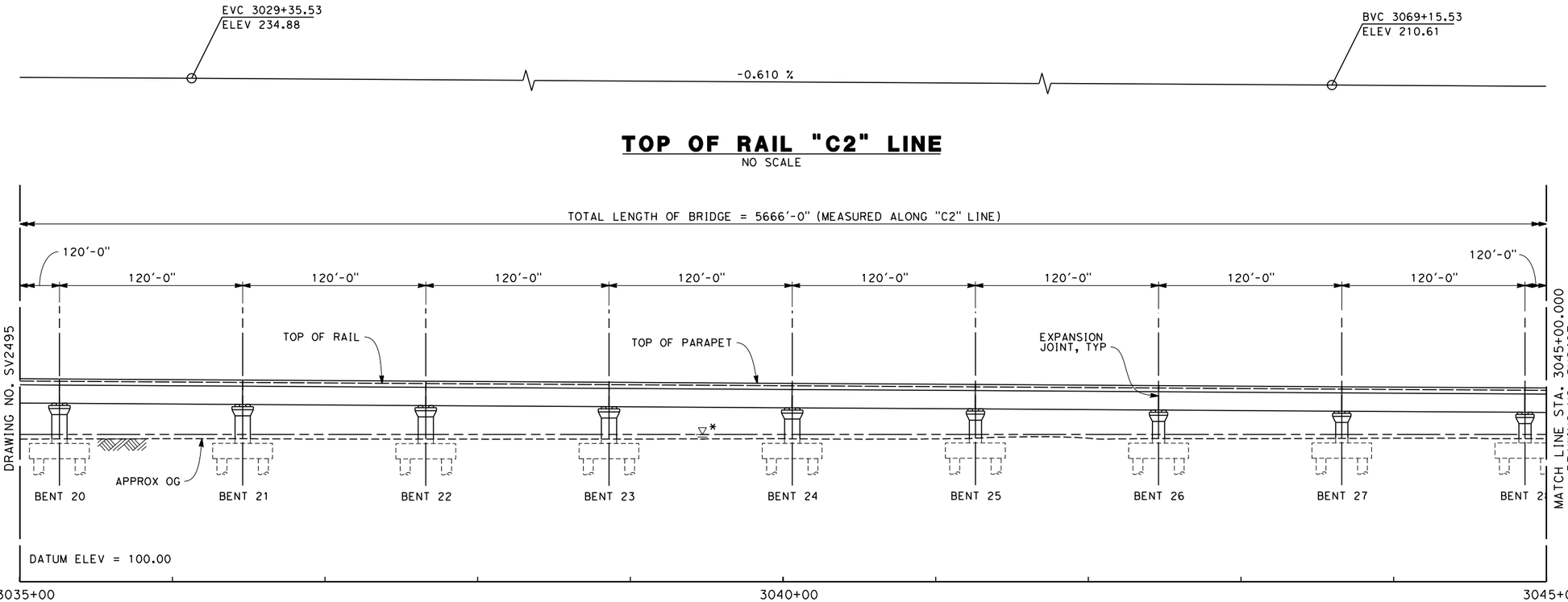


## TOP OF RAIL "C2" LINE
NO SCALE

## ELEVATION
SCALE 1" = 40'

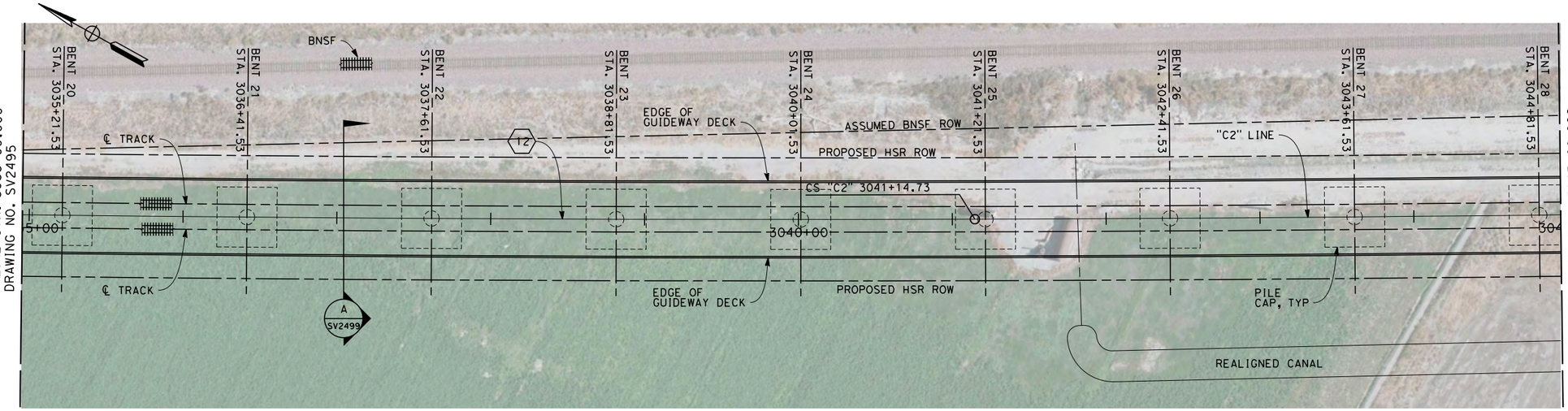


## PLAN
SCALE 1" = 40'

NOTES
1. NOT ALL PILES SHOWN
2. PILE LENGTH TO BE DETERMINED
3. SUPERSTRUCTURE CONSTRUCTION, UON
   SIMPLE SPANS - MSS OR FLPM
   CONTINUOUS SPANS - BCC - PRECAST IN-SITU
   STEEL TRUSS - INSITU, SLID OR LAUNCHED
   ELEVATED SLABS - PC BEAM AND INSITU SLAB
4. UTILITY LOCATIONS TO BE DETERMINED
5. ACCESS STAIRWAYS ARE PROVIDED AT SYSTEMS SITES (APPROX. 2.5 MILE INTERVALS). LADDER ACCESS TO VIADUCTS IS PROVIDED AT 2500 FT INTERVALS WITH ACCESS ROAD AND TURNING CIRCLE WHERE NECESSARY.

LEGEND:
1. STRUCTURE APPROACH SLAB
2. RETAINING WALL
* ESTIMATED 100-YEAR FLOOD ELEVATION, SEE "FRESNO TO BAKERSFIELD CORRIDOR HYDROLOGY, HYDRAULICS AND DRAINAGE 15% DRAFT REPORT".

CURVE DATA
(12)
R = 41000.00'
Δ = 01° 14' 39.4"
T = 1846.0'
L = 9734.5'

40 0 40 80
1"=40'

04/02/2014 - RFP No.: HSR 13-57

| REV | DATE | BY | CHK | APP | DESCRIPTION |
|---|---|---|---|---|---|

DESIGNED BY M. FISHER
DRAWN BY F. PALERMO
CHECKED BY A. ARMSTRONG
IN CHARGE R. COFFIN
DATE 12/31/13

**RECORD SET 15% DESIGN SUBMISSION - NOT FOR CONSTRUCTION**

URS | HMM | ARUP
CALIFORNIA HIGH-SPEED TRAIN

CALIFORNIA HIGH-SPEED RAIL AUTHORITY

**CALIFORNIA HIGH-SPEED TRAIN PROJECT**
**FRESNO TO BAKERSFIELD**
CORCORAN BYPASS SUBSECTION
ALIGNMENT C2
STATE ROUTE 43 BNSF VIADUCT
PLAN AND ELEVATION

CONTRACT NO. HSR 06-0003
DRAWING NO. SV2496
SCALE AS SHOWN
SHEET NO. 7 OF 11

frank.palermo 12/28/2013 2:20:05 PM c:\pwworking\hmm\external\frank.palermo01-arup.com\d0125238\FB-SV-2496-C2.dgn

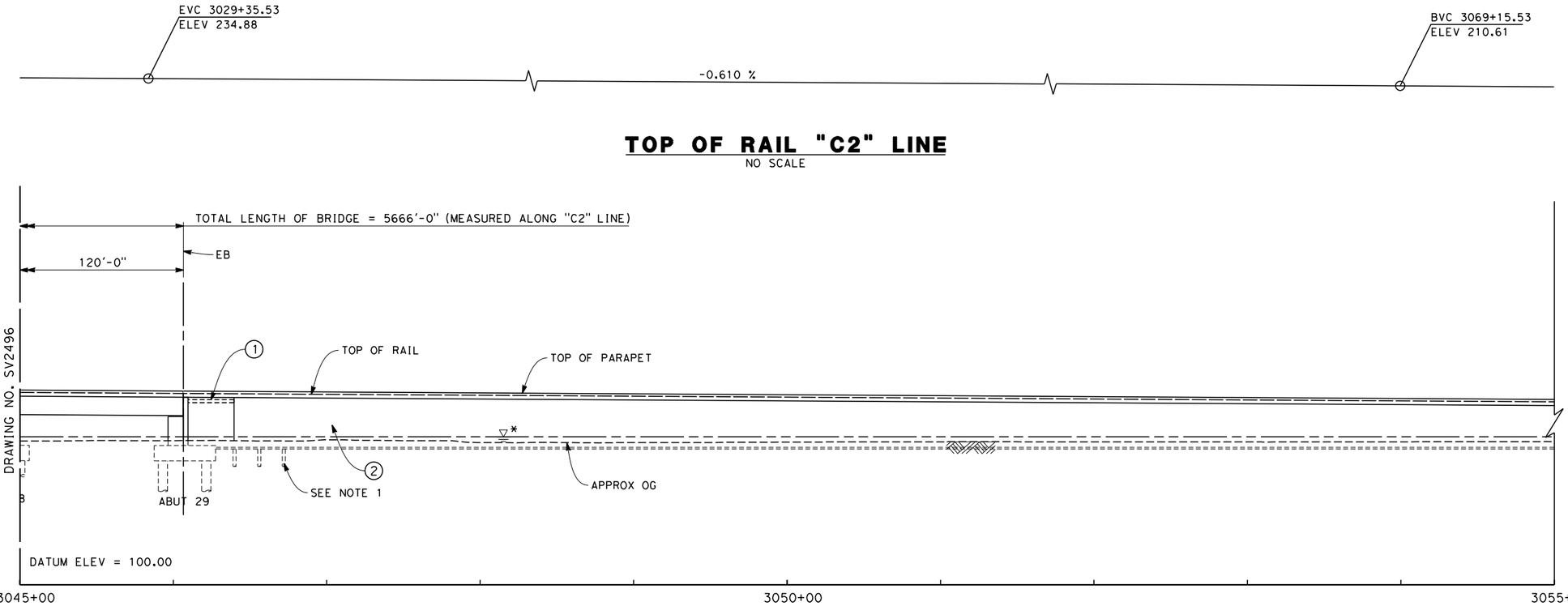


## TOP OF RAIL "C2" LINE
NO SCALE




## ELEVATION
SCALE 1" = 40'

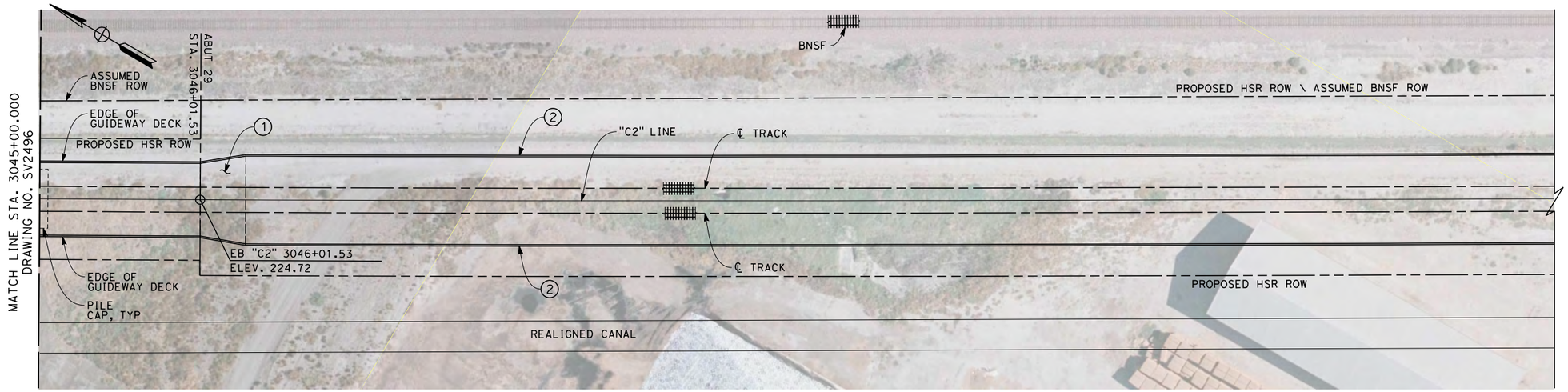


## PLAN
SCALE 1" = 40'

NOTES
1. NOT ALL PILES SHOWN
2. PILE LENGTH TO BE DETERMINED
3. SUPERSTRUCTURE CONSTRUCTION, UON
   SIMPLE SPANS - MSS OR FLPM
   CONTINUOUS SPANS - BCC - PRECAST IN-SITU
   STEEL TRUSS - INSITU, SLID OR LAUNCHED
   ELEVATED SLABS - PC BEAM AND INSITU SLAB
4. UTILITY LOCATIONS TO BE DETERMINED
5. ACCESS STAIRWAYS ARE PROVIDED AT SYSTEMS SITES (APPROX. 2.5 MILE INTERVALS). LADDER ACCESS TO VIADUCTS IS PROVIDED AT 2500 FT INTERVALS WITH ACCESS ROAD AND TURNING CIRCLE WHERE NECESSARY.

LEGEND:
1. STRUCTURE APPROACH SLAB
2. RETAINING WALL
* ESTIMATED 100-YEAR FLOOD ELEVATION, SEE "FRESNO TO BAKERSFIELD CORRIDOR HYDROLOGY, HYDRAULICS AND DRAINAGE 15% DRAFT REPORT".

40 0 40 80
1"=40'

04/02/2014 - RFP No.: HSR 13-57

| REV | DATE | BY | CHK | APP | DESCRIPTION |
|---|---|---|---|---|---|

DESIGNED BY M. FISHER
DRAWN BY F. PALERMO
CHECKED BY A. ARMSTRONG
IN CHARGE R. COFFIN
DATE 12/31/13

**RECORD SET 15% DESIGN SUBMISSION - NOT FOR CONSTRUCTION**

URS | HMM | ARUP
CALIFORNIA HIGH-SPEED TRAIN

CALIFORNIA HIGH-SPEED RAIL AUTHORITY

# CALIFORNIA HIGH-SPEED TRAIN PROJECT
# FRESNO TO BAKERSFIELD
CORCORAN BYPASS SUBSECTION
ALIGNMENT C2
STATE ROUTE 43 BNSF VIADUCT
PLAN AND ELEVATION

CONTRACT NO. HSR 06-0003
DRAWING NO. SV2497
SCALE AS SHOWN
SHEET NO. 8 OF 11

andrew.armstrong\ 2/12/2013 11:19:44 AM c:\pwworking\hmm\external\andrew.armstrong-arup.com\d0125238\FB-SV-2497-C2.dgn

| COLUMN DIAMETERS | |
|---|---|
| COLUMN HEIGHT | DIAMETER |
| 0-20 | 8 FT |
| 20-40 | 10 FT |
| 40-50 | 12 FT |
| 50-60 | 15 FT |
| 60-80 | 20 FT |
| 80-100 | 25 FT |

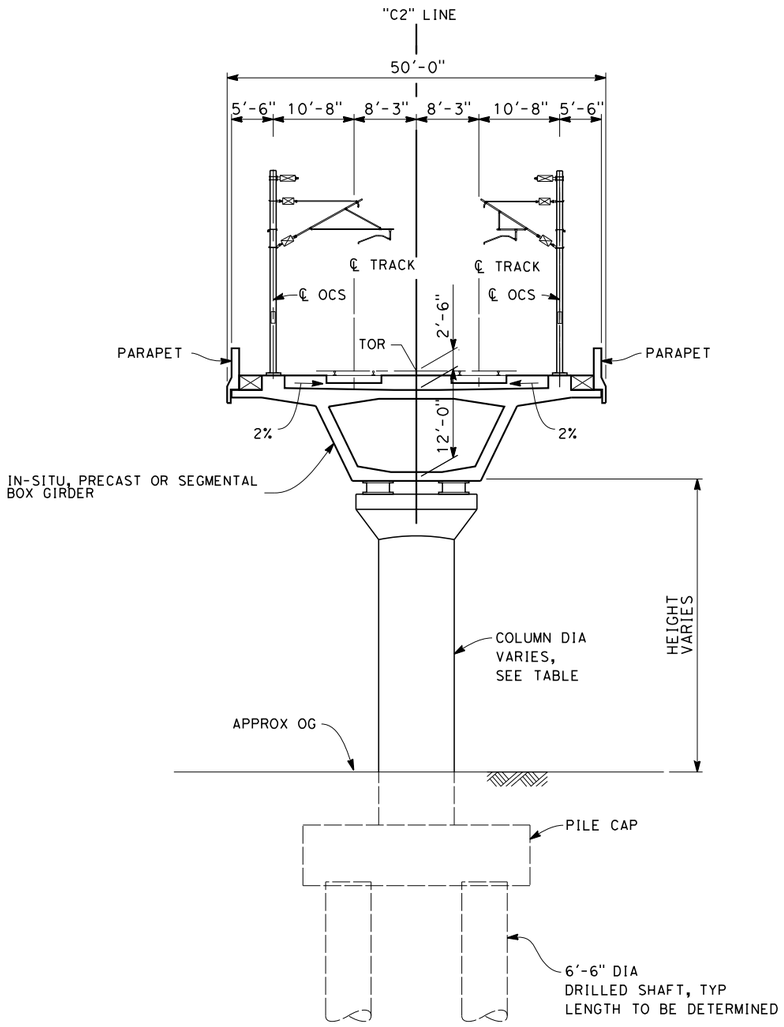


## SECTION A

SCALE: 1" = 10'

STA 2989+40 THROUGH 3005+00
STA 3029+26 THROUGH 3046+06

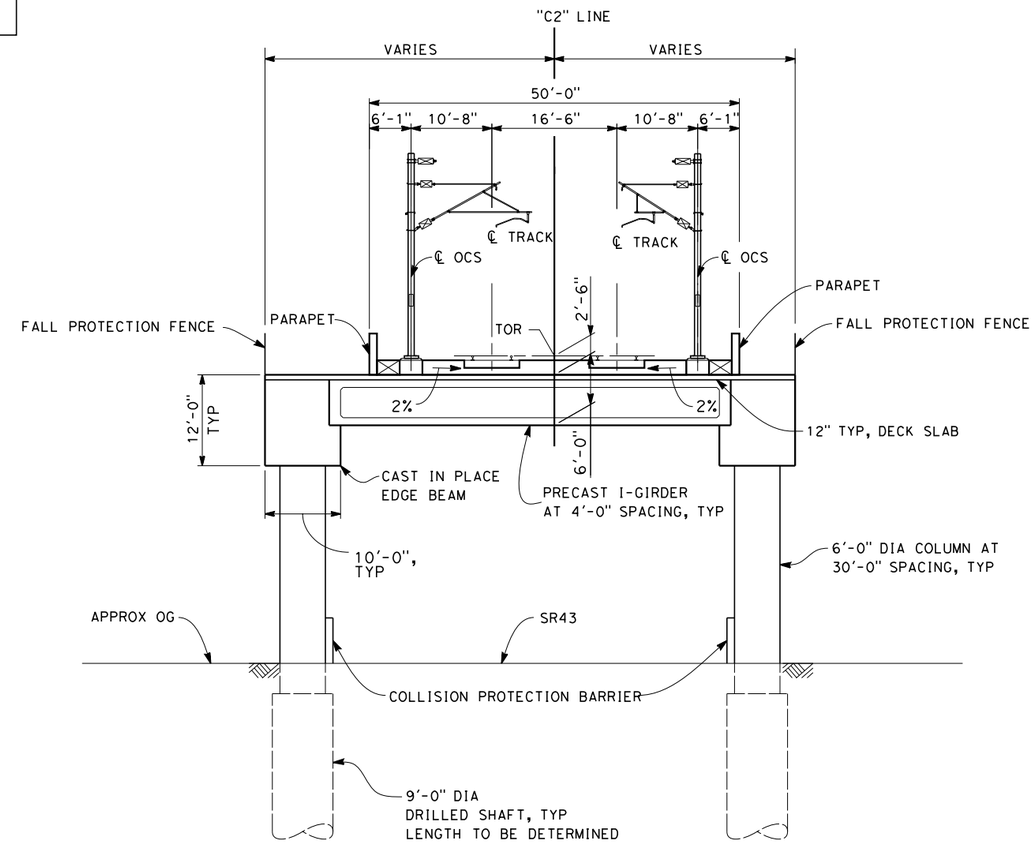


## SECTION B

SCALE: 1" = 10'

STA 3005+00 THROUGH 3009+00

NOTES:

1. PIER PROTECTION IS REQUIRED WHERE COLUMN FACE IS CLOSER THAT 54 FT FROM ROADWAY.

10 0 10 20
1"-10'

04/02/2014 - RFP No.: HSR 13-57

| REV | DATE | BY | CHK | APP | DESCRIPTION |
|---|---|---|---|---|---|

DESIGNED BY Y. REN
DRAWN BY F. PALERMO
CHECKED BY A. ARMSTRONG
IN CHARGE R. COFFIN
DATE 12/31/13

**RECORD SET 15% DESIGN SUBMISSION - NOT FOR CONSTRUCTION**

URS | HMM | ARUP
California High-Speed Train

CALIFORNIA HIGH-SPEED RAIL AUTHORITY

**CALIFORNIA HIGH-SPEED TRAIN PROJECT**
**FRESNO TO BAKERSFIELD**
CORCORAN BYPASS SUBSECTION
ALIGNMENT C2
STATE ROUTE 43 BNSF VIADUCT
TYPICAL SECTIONS

CONTRACT NO. HSR 06-0003
DRAWING NO. SV2499
SCALE AS SHOWN
SHEET NO. 9 OF 11

andrew.armstrong2/12/2013 11:19:49 AM c:\pwworking\hmm\external\andrew.armstrong-arup.com\d0125238\FB-SV-2499-C2.dgn

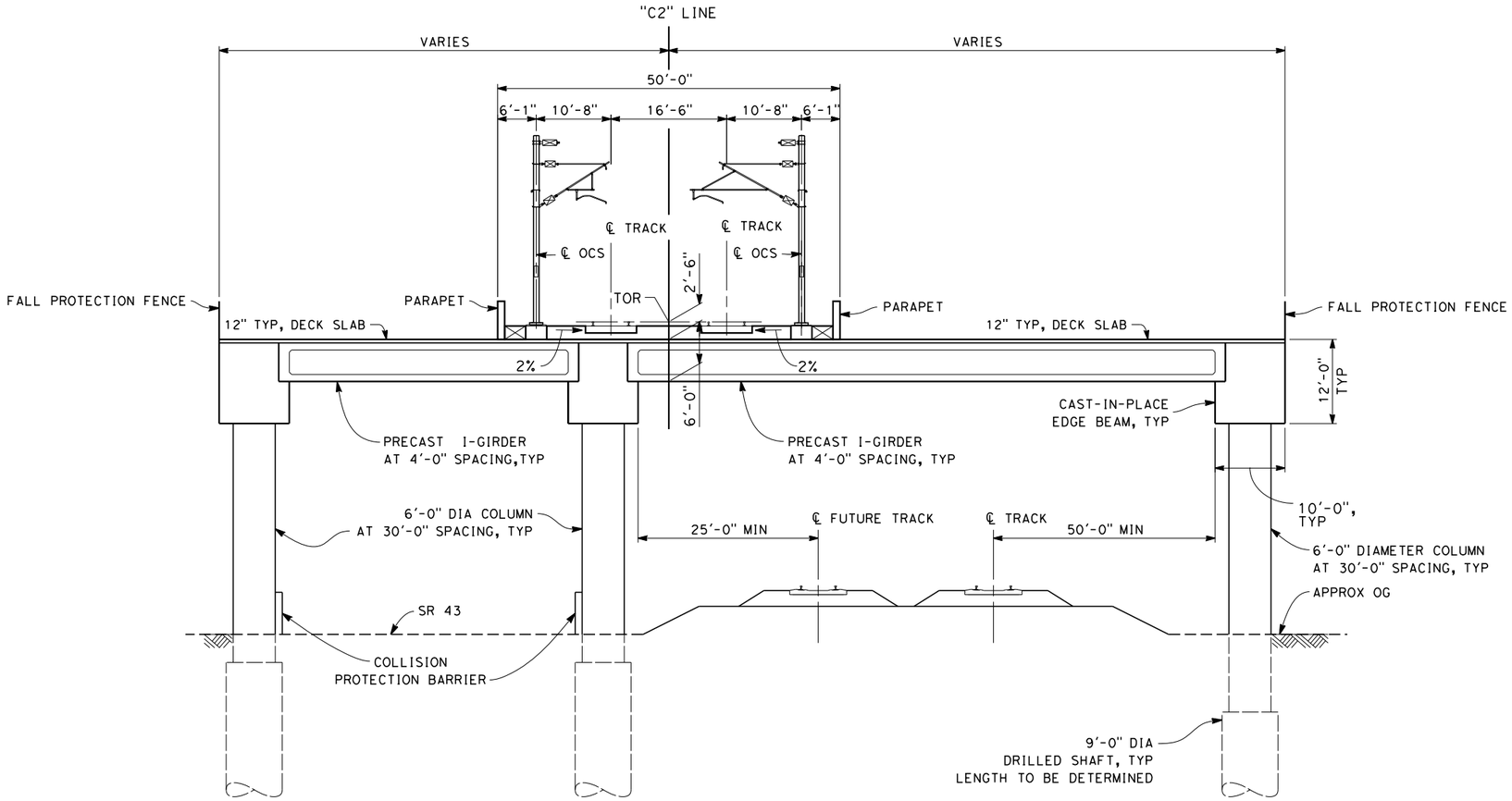


NOTES:

1. PIER PROTECTION IS REQUIRED WHERE COLUMN FACE IS CLOSER THAT 54 FT FROM ROADWAY.

## SECTION C

SCALE: 1" = 10'

STA 3009+00 THROUGH 3015+20

10 0 10 20
1"-10'

| REV | DATE | BY | CHK | APP | DESCRIPTION |
|---|---|---|---|---|---|
| | | | | | |

DESIGNED BY Y. REN
DRAWN BY F. PALERMO
CHECKED BY A. ARMSTRONG
IN CHARGE R. COFFIN
DATE 12/31/13

**RECORD SET 15% DESIGN SUBMISSION - NOT FOR CONSTRUCTION**

URS | HMM | ARUP

CALIFORNIA HIGH-SPEED RAIL AUTHORITY

**CALIFORNIA HIGH-SPEED TRAIN PROJECT**
**FRESNO TO BAKERSFIELD**
CORCORAN BYPASS SUBSECTION
ALIGNMENT C2
STATE ROUTE 43 BNSF VIADUCT
TYPICAL SECTIONS

CONTRACT NO. HSR 06-0003
DRAWING NO. SV2500
SCALE AS SHOWN
SHEET NO. 10 OF 11

04/02/2014 - RFP No.: HSR 13-57

andrew.armstrong\2/12/2013 11:19:54 AM c:\pwworking\hmm\external\andrew.armstrong-arup.com\d0125238\FB-SV-2500-C2.dgn

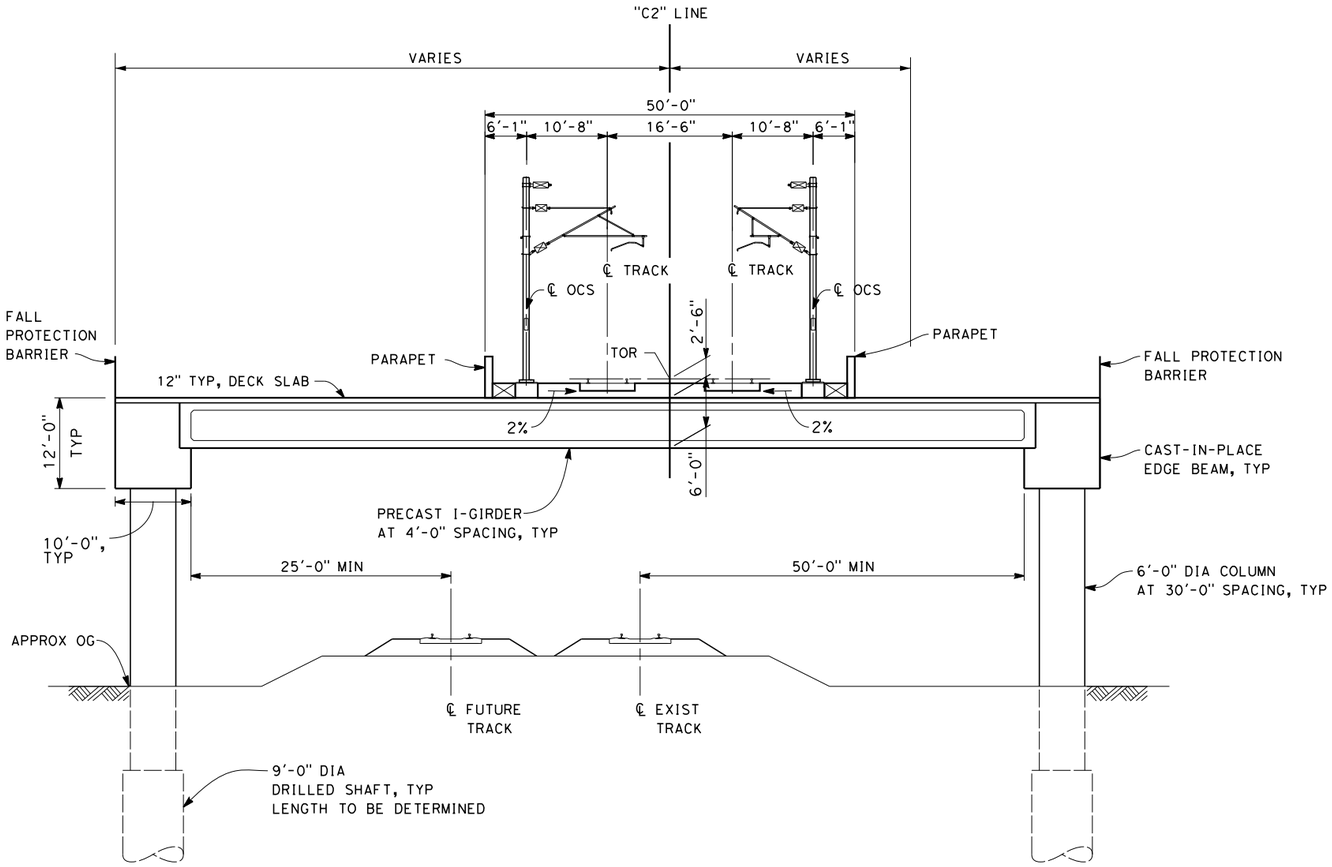


## SECTION D

SCALE: 1" = 10'

STA 3015+20 THROUGH 3029+26

10 0 10 20

1"-10'

04/02/2014 - RFP No.: HSR 13-57

| REV | DATE | BY | CHK | APP | DESCRIPTION |
|---|---|---|---|---|---|

DESIGNED BY Y. REN
DRAWN BY F. PALERMO
CHECKED BY A. ARMSTRONG
IN CHARGE R. COFFIN
DATE 12/31/13

RECORD SET 15% DESIGN SUBMISSION - NOT FOR CONSTRUCTION

URS | HMM | ARUP
California High-Speed Train

CALIFORNIA HIGH-SPEED RAIL AUTHORITY

**CALIFORNIA HIGH-SPEED TRAIN PROJECT**
**FRESNO TO BAKERSFIELD**
CORCORAN BYPASS SUBSECTION
ALIGNMENT C2
STATE ROUTE 43 BNSF VIADUCT
TYPICAL SECTIONS

CONTRACT NO. HSR 06-0003
DRAWING NO. SV2501
SCALE AS SHOWN
SHEET NO. 11 OF 11

andrew.armstrong2/12/2013 11:19:58 AM c:\pwworking\hmm\external\andrew.armstrong-arup.com\d0125238\FB-SV-2501-C2.dgn

LEGEND

EXISTING FREIGHT RAILROAD

PROPOSED CHST

3000 0 3000 6000

1"-3000'

| REV | DATE | BY | CHK | APP | DESCRIPTION |
|---|---|---|---|---|---|
| | | | | | |

DESIGNED BY Y. REN
DRAWN BY F. PALERMO
CHECKED BY A. ARMSTRONG
IN CHARGE R. COFFIN
DATE 12/31/13

**RECORD SET 15% DESIGN SUBMISSION - NOT FOR CONSTRUCTION**

URS | HMM | ARUP
CALIFORNIA HIGH-SPEED TRAIN

CALIFORNIA HIGH-SPEED RAIL AUTHORITY

# CALIFORNIA HIGH-SPEED TRAIN PROJECT
## FRESNO TO BAKERSFIELD
ALLENSWORTH BYPASS SUBSECTION
ALIGNMENT A1
DEER CREEK VIADUCT
KEY MAP

CONTRACT NO. HSR 06-0003
DRAWING NO. SV1500
SCALE AS SHOWN
SHEET NO. 1 OF 9

04/02/2014 - RFP No.: HSR 13-57

frank.palermo 12/23/2013 12:22:16 PM c:\pwworking\hmm\external\frank.palermo01-arup.com\d0125274\FB-SV-1500-A1.dgn

## TOP OF RAIL "A1" LINE
NO SCALE

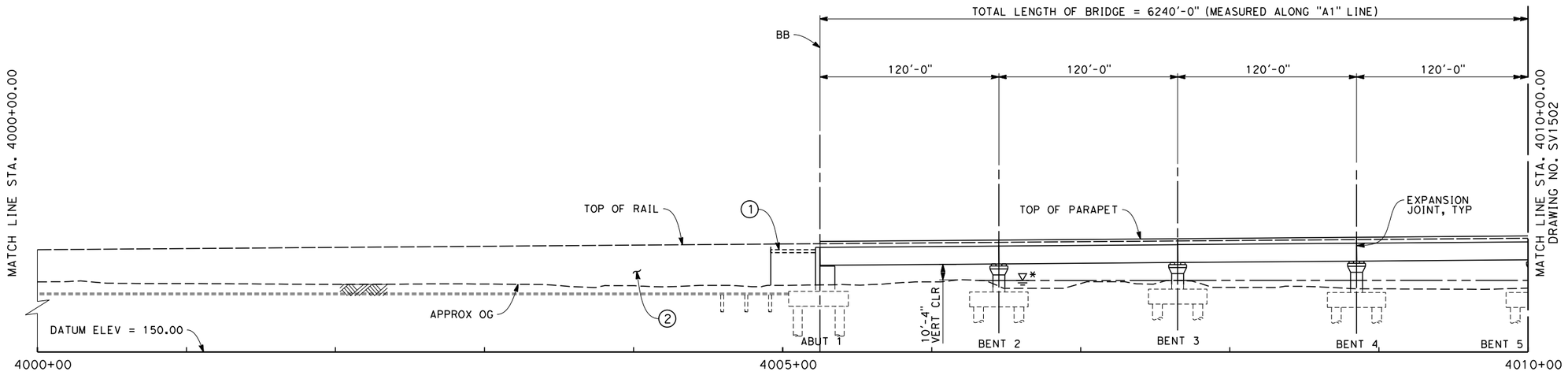


## ELEVATION
SCALE 1" = 40'

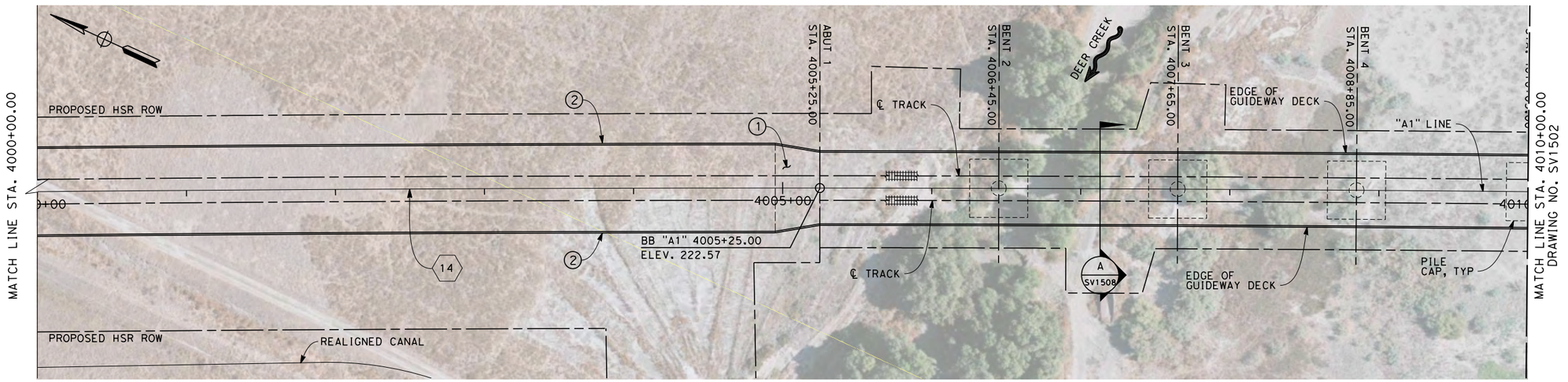


## PLAN
SCALE 1" = 40'

NOTES
1. NOT ALL PILES SHOWN
2. PILE LENGTH TO BE DETERMINED
3. SUPERSTRUCTURE CONSTRUCTION, UON
   SIMPLE SPANS - MSS OR FLPM
   CONTINUOUS SPANS - BCC - PRECAST IN-SITU
   STEEL TRUSS - INSITU, SLID OR LAUNCHED
   ELEVATED SLABS - PC BEAM AND INSITU SLAB
4. UTILITY LOCATIONS TO BE DETERMINED
5. ACCESS STAIRWAYS ARE PROVIDED AT SYSTEMS SITES (APPROX. 2.5 MILE INTERVALS). LADDER ACCESS TO VIADUCTS IS PROVIDED AT 2500 FT INTERVALS WITH ACCESS ROAD AND TURNING CIRCLE WHERE NECESSARY.

LEGEND:
1. STRUCTURE APPROACH SLAB
2. RETAINING WALL
* ESTIMATED 100-YEAR FLOOD ELEVATION, SEE "FRESNO TO BAKERSFIELD CORRIDOR HYDROLOGY, HYDRAULICS AND DRAINAGE 15% DRAFT REPORT".

CURVE DATA

14

R = 50500.0'
Δ = 24° 16' 19.0"
T = 10859.4'
L = 21393.1'

40 0 40 80
1"=40'

04/02/2014 - RFP No.: HSR 13-57

| REV | DATE | BY | CHK | APP | DESCRIPTION |
|---|---|---|---|---|---|

DESIGNED BY M. FISHER
DRAWN BY F. PALERMO
CHECKED BY A. ARMSTRONG
IN CHARGE R. COFFIN
DATE 12/31/13

RECORD SET 15% DESIGN SUBMISSION - NOT FOR CONSTRUCTION

URS | HMM | ARUP
CALIFORNIA HIGH-SPEED TRAIN

CALIFORNIA HIGH-SPEED RAIL AUTHORITY

**CALIFORNIA HIGH-SPEED TRAIN PROJECT**
**FRESNO TO BAKERSFIELD**
ALLENSWORTH BYPASS SUBSECTION
ALIGNMENT A1
DEER CREEK VIADUCT
PLAN AND ELEVATION

CONTRACT NO. HSR 06-0003
DRAWING NO. SV1501
SCALE AS SHOWN
SHEET NO. 2 OF 9

frank.palermo 12/28/2013 1:15:53 PM c:\pwworking\hmm\external\frank.palermo01-arup.com\d0125274\FB-SV-1501-A1.dgn

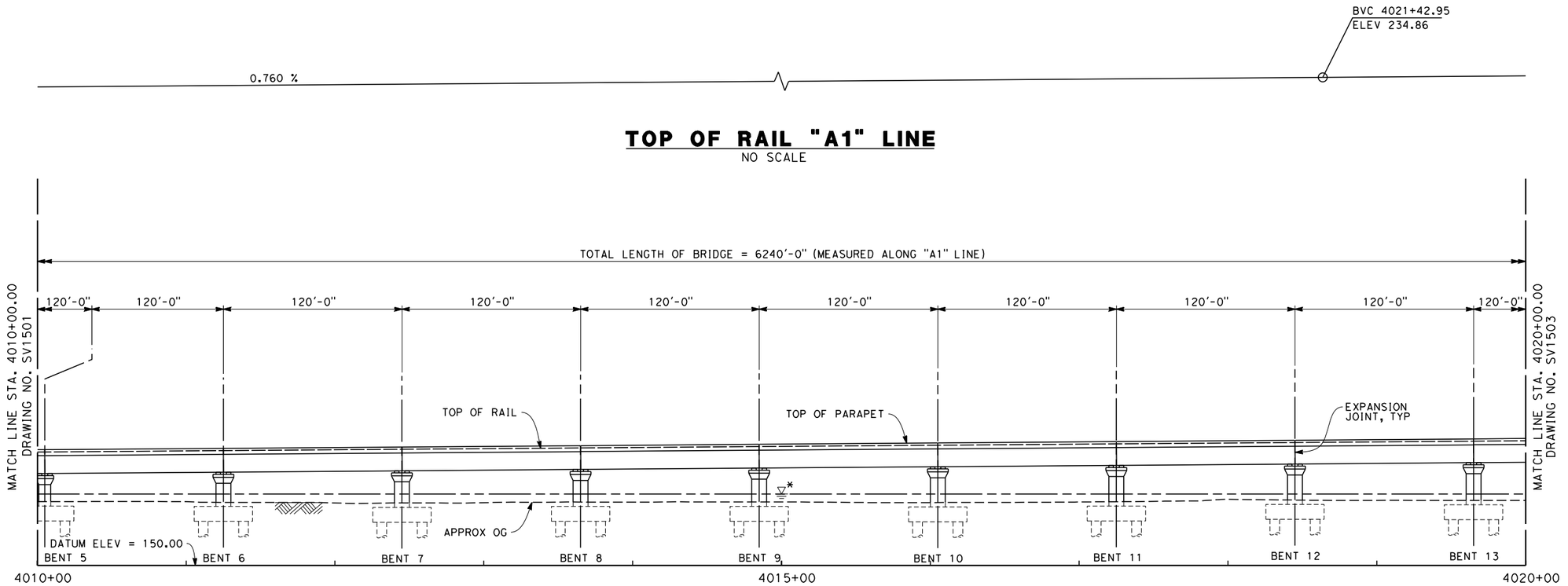


## TOP OF RAIL "A1" LINE
NO SCALE

## ELEVATION
SCALE 1" = 40'

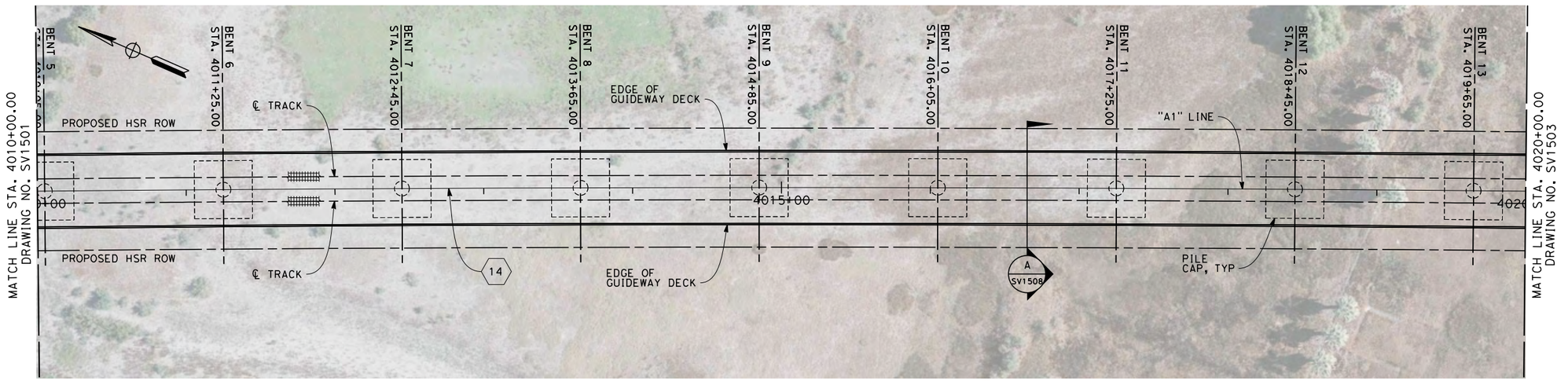


## PLAN
SCALE 1" = 40'

### NOTES
1. NOT ALL PILES SHOWN
2. PILE LENGTH TO BE DETERMINED
3. SUPERSTRUCTURE CONSTRUCTION, UON
   - SIMPLE SPANS - MSS OR FLPM
   - CONTINUOUS SPANS - BCC - PRECAST IN-SITU
   - STEEL TRUSS - INSITU, SLID OR LAUNCHED
   - ELEVATED SLABS - PC BEAM AND INSITU SLAB
4. UTILITY LOCATIONS TO BE DETERMINED
5. ACCESS STAIRWAYS ARE PROVIDED AT SYSTEMS SITES (APPROX. 2.5 MILE INTERVALS). LADDER ACCESS TO VIADUCTS IS PROVIDED AT 2500 FT INTERVALS WITH ACCESS ROAD AND TURNING CIRCLE WHERE NECESSARY.

LEGEND:
1. STRUCTURE APPROACH SLAB
2. RETAINING WALL
* ESTIMATED 100-YEAR FLOOD ELEVATION, SEE "FRESNO TO BAKERSFIELD CORRIDOR HYDROLOGY, HYDRAULICS AND DRAINAGE 15% DRAFT REPORT".

CURVE DATA

14

R = 50500.0'
Δ = 24° 16' 19.0"
T = 10859.4'
L = 21393.1'

40 0 40 80
1"=40'

04/02/2014 - RFP No.: HSR 13-57

| REV | DATE | BY | CHK | APP | DESCRIPTION |
|---|---|---|---|---|---|

DESIGNED BY M. FISHER
DRAWN BY F. PALERMO
CHECKED BY A. ARMSTRONG
IN CHARGE R. COFFIN
DATE 12/31/13

RECORD SET 15% DESIGN SUBMISSION - NOT FOR CONSTRUCTION

URS | HMM | ARUP
CALIFORNIA HIGH-SPEED TRAIN

CALIFORNIA HIGH-SPEED RAIL AUTHORITY

**CALIFORNIA HIGH-SPEED TRAIN PROJECT**
**FRESNO TO BAKERSFIELD**
ALLENSWORTH BYPASS SUBSECTION
ALIGNMENT A1
DEER CREEK VIADUCT
PLAN AND ELEVATION

CONTRACT NO. HSR 06-0003
DRAWING NO. SV1502
SCALE AS SHOWN
SHEET NO. 3 OF 9

frank.palermo 12/28/2013 1:04:14 PM c:\pwworking\hmm\external\frank.palermo01-arup.com\d0125274\FB-SV-1502-A1.dgn

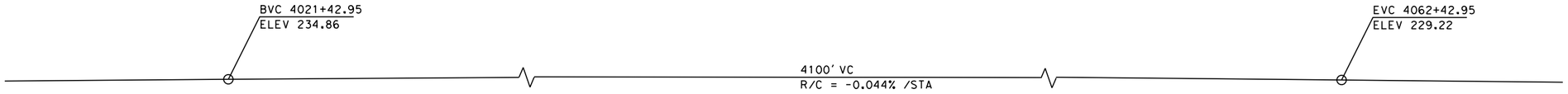


## TOP OF RAIL "A1" LINE

NO SCALE

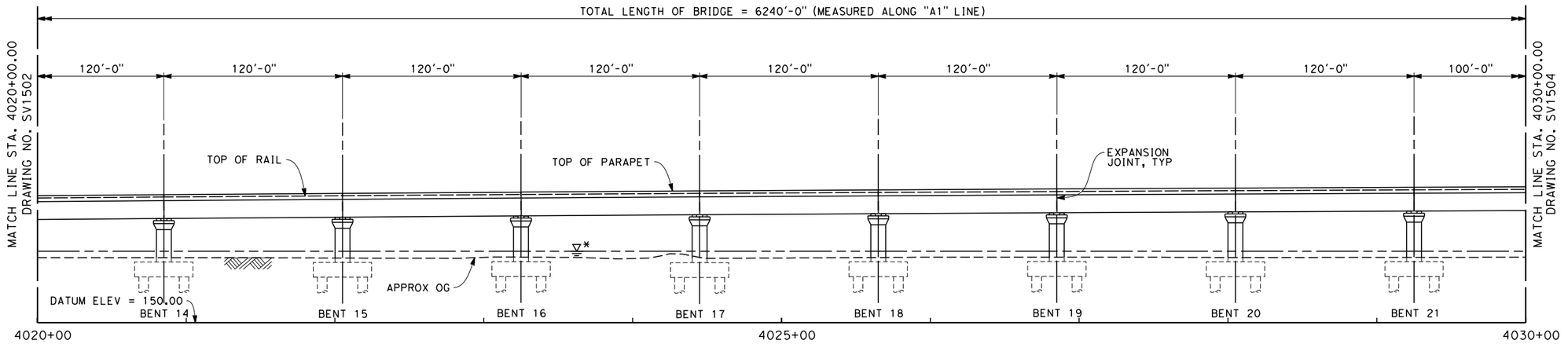


## ELEVATION

SCALE 1" = 40'

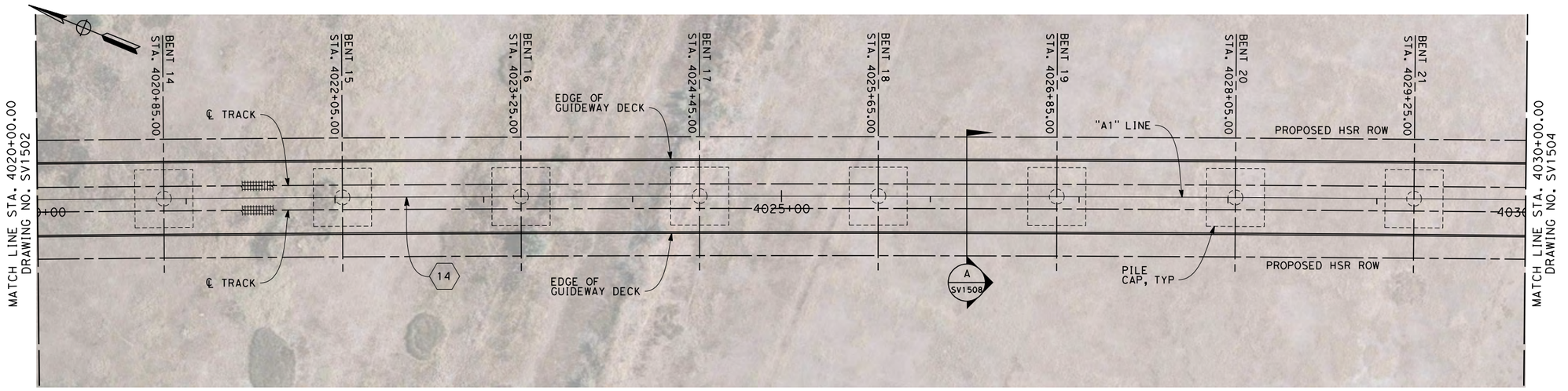


## PLAN

SCALE 1" = 40'

NOTES

1. NOT ALL PILES SHOWN
2. PILE LENGTH TO BE DETERMINED
3. SUPERSTRUCTURE CONSTRUCTION, UON
   SIMPLE SPANS - MSS OR FLPM
   CONTINUOUS SPANS - BCC - PRECAST IN-SITU
   STEEL TRUSS - INSITU, SLID OR LAUNCHED
   ELEVATED SLABS - PC BEAM AND INSITU SLAB
4. UTILITY LOCATIONS TO BE DETERMINED
5. ACCESS STAIRWAYS ARE PROVIDED AT SYSTEMS SITES (APPROX. 2.5 MILE INTERVALS). LADDER ACCESS TO VIADUCTS IS PROVIDED AT 2500 FT INTERVALS WITH ACCESS ROAD AND TURNING CIRCLE WHERE NECESSARY.

LEGEND:

1. STRUCTURE APPROACH SLAB
2. RETAINING WALL

* ESTIMATED 100-YEAR FLOOD ELEVATION, SEE "FRESNO TO BAKERSFIELD CORRIDOR HYDROLOGY, HYDRAULICS AND DRAINAGE 15% DRAFT REPORT".

CURVE DATA

14

R = 50500.0'
Δ = 24° 16' 19.0"
T = 10859.4'
L = 21393.1'

40 0 40 80
1"=40'

04/02/2014 - RFP No.: HSR 13-57

| REV | DATE | BY | CHK | APP | DESCRIPTION |
|---|---|---|---|---|---|

DESIGNED BY M. FISHER
DRAWN BY F. PALERMO
CHECKED BY A. ARMSTRONG
IN CHARGE R. COFFIN
DATE 12/31/13

**RECORD SET 15% DESIGN SUBMISSION - NOT FOR CONSTRUCTION**

URS | HMM | ARUP
CALIFORNIA HIGH-SPEED TRAIN

CALIFORNIA HIGH-SPEED RAIL AUTHORITY

**CALIFORNIA HIGH-SPEED TRAIN PROJECT**
**FRESNO TO BAKERSFIELD**
ALLENSWORTH BYPASS SUBSECTION
ALIGNMENT A1
DEER CREEK VIADUCT
PLAN AND ELEVATION

CONTRACT NO. HSR 06-0003
DRAWING NO. SV1503
SCALE AS SHOWN
SHEET NO. 4 OF 9

jojo.valenzuela 12/30/2013 9:59:02 AM c:\pwworking\hmm\external\jojo.valenzuela-arup.com\d0125274\FB-SV-1503-A1.dgn

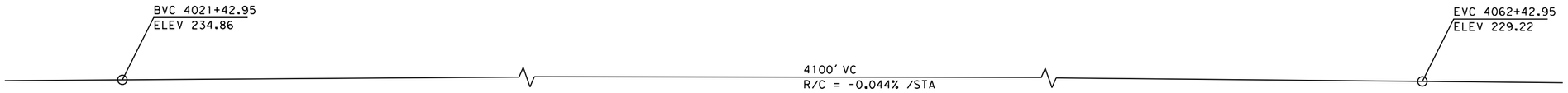


## TOP OF RAIL "A1" LINE
NO SCALE

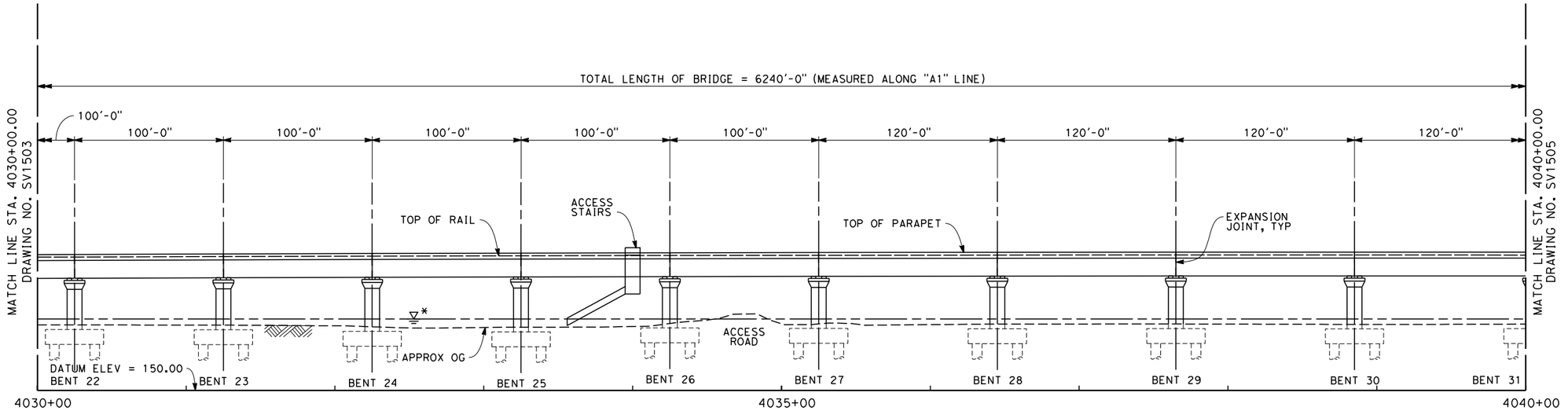


## ELEVATION
SCALE 1" = 40'

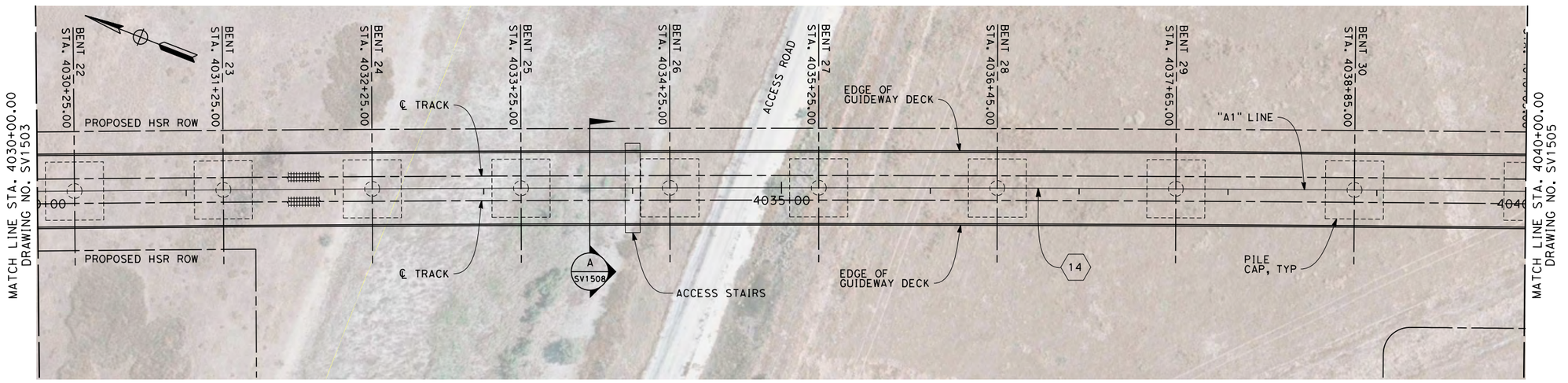


## PLAN
SCALE 1" = 40'

NOTES
1. NOT ALL PILES SHOWN
2. PILE LENGTH TO BE DETERMINED
3. SUPERSTRUCTURE CONSTRUCTION, UON
   SIMPLE SPANS - MSS OR FLPM
   CONTINUOUS SPANS - BCC - PRECAST IN-SITU
   STEEL TRUSS - INSITU, SLID OR LAUNCHED
   ELEVATED SLABS - PC BEAM AND INSITU SLAB
4. UTILITY LOCATIONS TO BE DETERMINED
5. ACCESS STAIRWAYS ARE PROVIDED AT SYSTEMS SITES (APPROX. 2.5 MILE INTERVALS). LADDER ACCESS TO VIADUCTS IS PROVIDED AT 2500 FT INTERVALS WITH ACCESS ROAD AND TURNING CIRCLE WHERE NECESSARY.

LEGEND:
(1) STRUCTURE APPROACH SLAB
(2) RETAINING WALL
* ESTIMATED 100-YEAR FLOOD ELEVATION, SEE "FRESNO TO BAKERSFIELD CORRIDOR HYDROLOGY, HYDRAULICS AND DRAINAGE 15% DRAFT REPORT".

CURVE DATA
(14)
R = 50500.0'
Δ = 24° 16' 19.0"
T = 10859.4'
L = 21393.1'

40 0 40 80
1"=40'

04/02/2014 - RFP No.: HSR 13-57

| REV | DATE | BY | CHK | APP | DESCRIPTION |
|---|---|---|---|---|---|

DESIGNED BY M. FISHER
DRAWN BY F. PALERMO
CHECKED BY A. ARMSTRONG
IN CHARGE R. COFFIN
DATE 12/31/13

RECORD SET 15% DESIGN SUBMISSION - NOT FOR CONSTRUCTION

URS | HMM | ARUP
California High-Speed Train

CALIFORNIA HIGH-SPEED RAIL AUTHORITY

# CALIFORNIA HIGH-SPEED TRAIN PROJECT
# FRESNO TO BAKERSFIELD
ALLENSWORTH BYPASS SUBSECTION
ALIGNMENT A1
DEER CREEK VIADUCT
PLAN AND ELEVATION

CONTRACT NO. HSR 06-0003
DRAWING NO. SV1504
SCALE AS SHOWN
SHEET NO. 5 OF 9

frank.palermo 12/23/2013 12:27:57 PM c:\pwworking\hmm\external\frank.palermo01-arup.com\d0125274\FB-SV-1504-A1.dgn

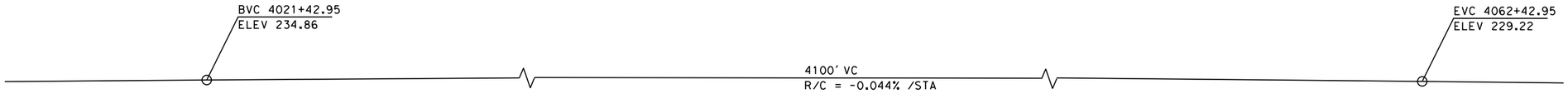


## TOP OF RAIL "A1" LINE
NO SCALE

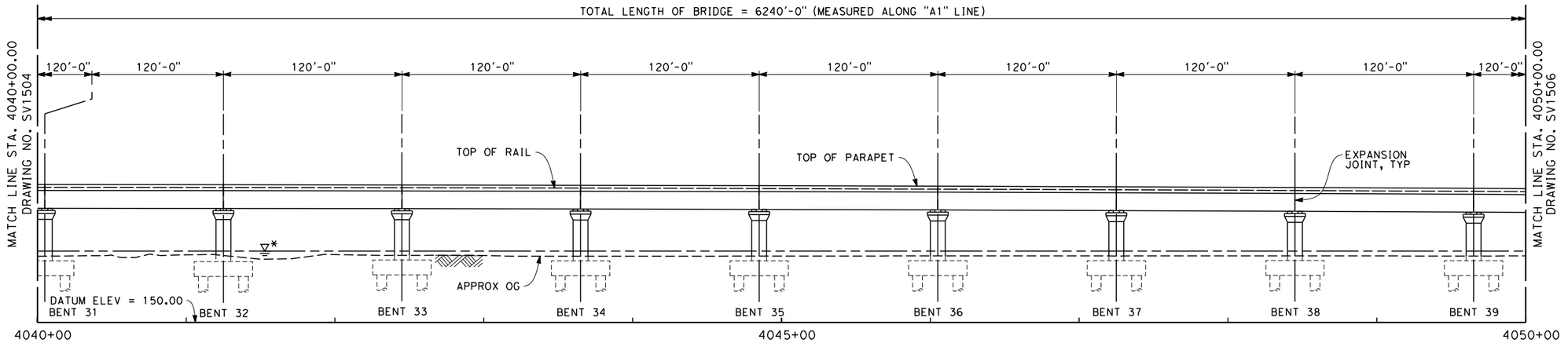


## ELEVATION
SCALE 1" = 40'

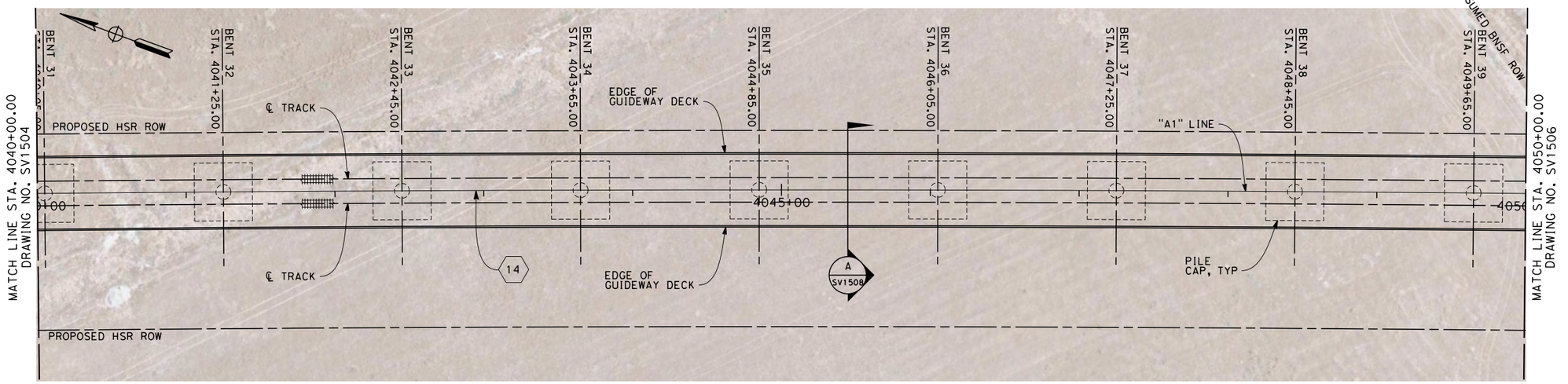


## PLAN
SCALE 1" = 40'

NOTES
1. NOT ALL PILES SHOWN
2. PILE LENGTH TO BE DETERMINED
3. SUPERSTRUCTURE CONSTRUCTION, UON
   SIMPLE SPANS - MSS OR FLPM
   CONTINUOUS SPANS - BCC - PRECAST IN-SITU
   STEEL TRUSS - INSITU, SLID OR LAUNCHED
   ELEVATED SLABS - PC BEAM AND INSITU SLAB
4. UTILITY LOCATIONS TO BE DETERMINED
5. ACCESS STAIRWAYS ARE PROVIDED AT SYSTEMS SITES (APPROX. 2.5 MILE INTERVALS). LADDER ACCESS TO VIADUCTS IS PROVIDED AT 2500 FT INTERVALS WITH ACCESS ROAD AND TURNING CIRCLE WHERE NECESSARY.

LEGEND:
(1) STRUCTURE APPROACH SLAB
(2) RETAINING WALL
* ESTIMATED 100-YEAR FLOOD ELEVATION, SEE "FRESNO TO BAKERSFIELD CORRIDOR HYDROLOGY, HYDRAULICS AND DRAINAGE 15% DRAFT REPORT".

CURVE DATA
(14)
R = 50500.0'
Δ = 24° 16' 19.0"
T = 10859.4'
L = 21393.1'

40 0 40 80
1"=40'

04/02/2014 - RFP No.: HSR 13-57

| REV | DATE | BY | CHK | APP | DESCRIPTION |
|---|---|---|---|---|---|

DESIGNED BY M. FISHER
DRAWN BY F. PALERMO
CHECKED BY A. ARMSTRONG
IN CHARGE R. COFFIN
DATE 12/31/13

**RECORD SET 15% DESIGN SUBMISSION - NOT FOR CONSTRUCTION**

URS | HMM | ARUP
California High-Speed Train

CALIFORNIA HIGH-SPEED RAIL AUTHORITY

**CALIFORNIA HIGH-SPEED TRAIN PROJECT**
**FRESNO TO BAKERSFIELD**
ALLENSWORTH BYPASS SUBSECTION
ALIGNMENT A1
DEER CREEK VIADUCT
PLAN AND ELEVATION

CONTRACT NO. HSR 06-0003
DRAWING NO. SV1505
SCALE AS SHOWN
SHEET NO. 6 OF 9

frank.palermo 12/23/2013 12:30:44 PM c:\pwworking\hmm\external\frank.palermo01-arup.com\d0125274\FB-SV-1505-A1.dgn

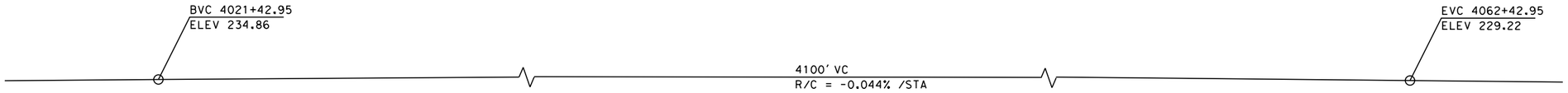


## TOP OF RAIL "A1" LINE

NO SCALE

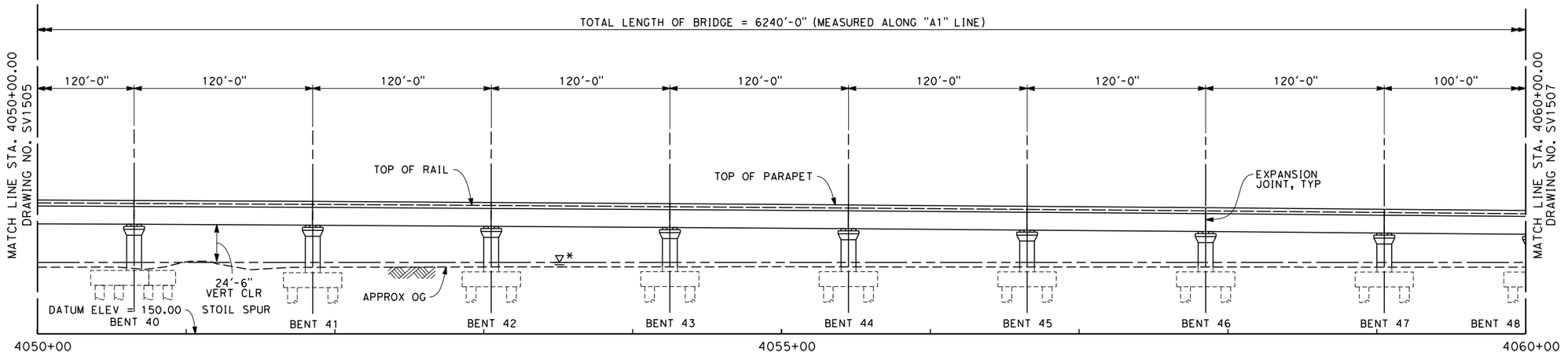


## ELEVATION

SCALE 1" = 40'

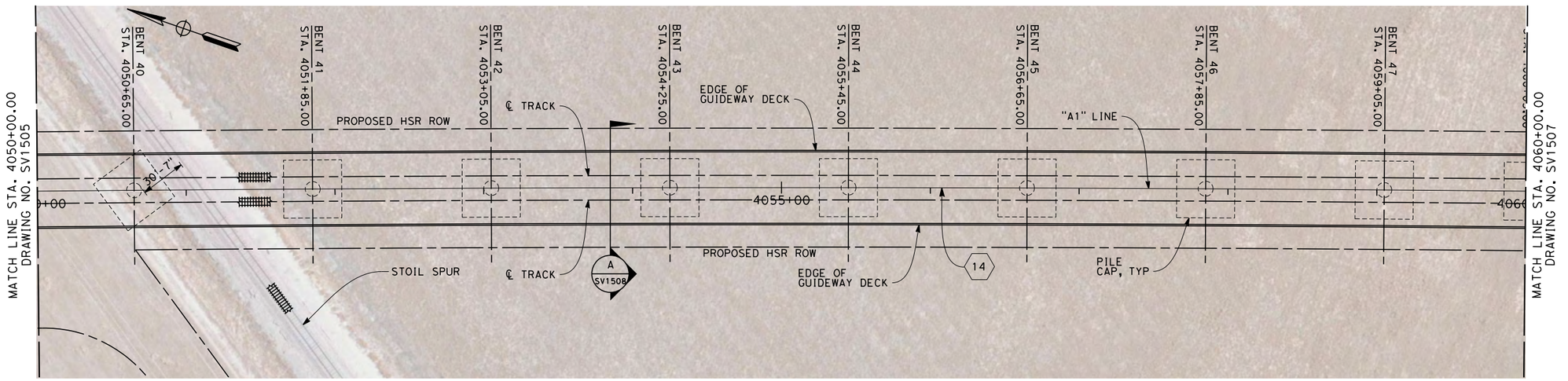


## PLAN

SCALE 1" = 40'

### NOTES

1. NOT ALL PILES SHOWN
2. PILE LENGTH TO BE DETERMINED
3. SUPERSTRUCTURE CONSTRUCTION, UON
   - SIMPLE SPANS - MSS OR FLPM
   - CONTINUOUS SPANS - BCC - PRECAST IN-SITU
   - STEEL TRUSS - INSITU, SLID OR LAUNCHED
   - ELEVATED SLABS - PC BEAM AND INSITU SLAB
4. UTILITY LOCATIONS TO BE DETERMINED
5. ACCESS STAIRWAYS ARE PROVIDED AT SYSTEMS SITES (APPROX. 2.5 MILE INTERVALS). LADDER ACCESS TO VIADUCTS IS PROVIDED AT 2500 FT INTERVALS WITH ACCESS ROAD AND TURNING CIRCLE WHERE NECESSARY.

### LEGEND:

(1) STRUCTURE APPROACH SLAB

(2) RETAINING WALL

* ESTIMATED 100-YEAR FLOOD ELEVATION, SEE "FRESNO TO BAKERSFIELD CORRIDOR HYDROLOGY, HYDRAULICS AND DRAINAGE 15% DRAFT REPORT".

### CURVE DATA

(14)

R = 50500.0'
Δ = 24° 16' 19.0"
T = 10859.4'
L = 21393.1'

40 0 40 80
1"=40'

04/02/2014 - RFP No.: HSR 13-57

| REV | DATE | BY | CHK | APP | DESCRIPTION |
|---|---|---|---|---|---|

DESIGNED BY M. FISHER
DRAWN BY F. PALERMO
CHECKED BY A. ARMSTRONG
IN CHARGE R. COFFIN
DATE 12/31/13

**RECORD SET 15% DESIGN SUBMISSION - NOT FOR CONSTRUCTION**

URS | HMM | ARUP
CALIFORNIA HIGH-SPEED TRAIN

CALIFORNIA HIGH-SPEED RAIL AUTHORITY

**CALIFORNIA HIGH-SPEED TRAIN PROJECT**
**FRESNO TO BAKERSFIELD**
ALLENSWORTH BYPASS SUBSECTION
ALIGNMENT A1
DEER CREEK VIADUCT
PLAN AND ELEVATION

CONTRACT NO. HSR 06-0003
DRAWING NO. SV1506
SCALE AS SHOWN
SHEET NO. 7 OF 9

frank.palermo 12/23/2013 12:33:37 PM c:\pwworking\hmm\external\frank.palermo01-arup.com\d0125274\FB-SV-1506-A1.dgn

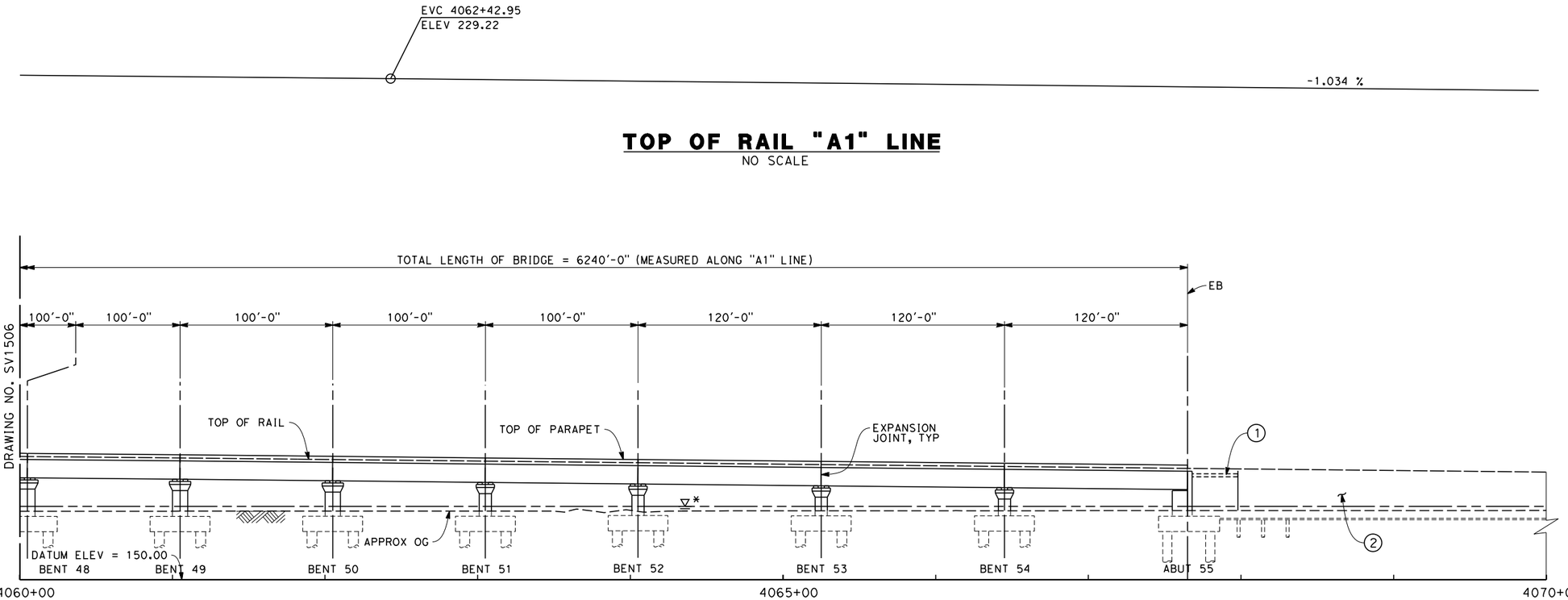


## TOP OF RAIL "A1" LINE

NO SCALE

## ELEVATION

SCALE 1" = 40'

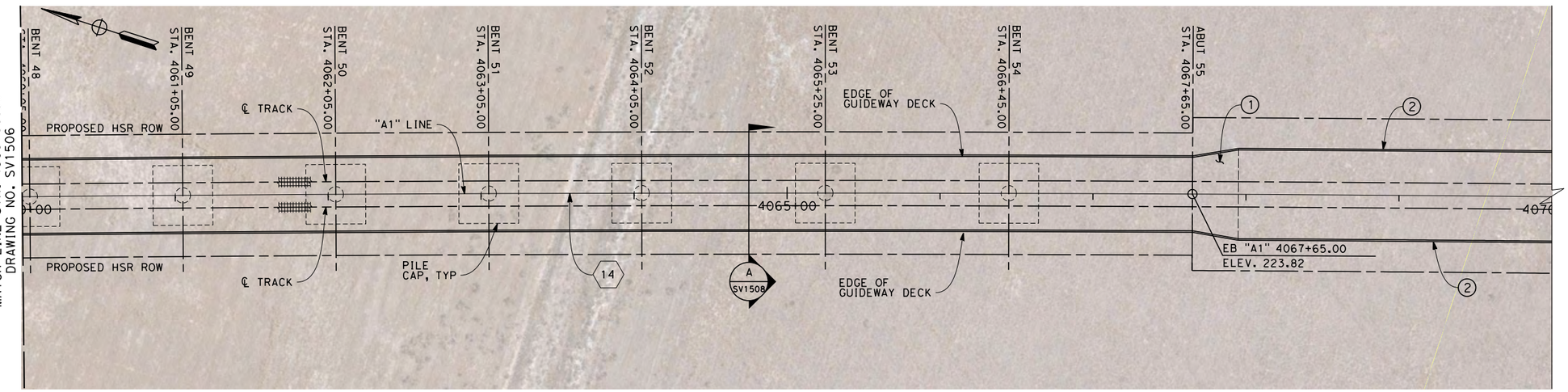


## PLAN

SCALE 1" = 40'

NOTES

1. NOT ALL PILES SHOWN
2. PILE LENGTH TO BE DETERMINED
3. SUPERSTRUCTURE CONSTRUCTION, UON
   SIMPLE SPANS - MSS OR FLPM
   CONTINUOUS SPANS - BCC - PRECAST IN-SITU
   STEEL TRUSS - INSITU, SLID OR LAUNCHED
   ELEVATED SLABS - PC BEAM AND INSITU SLAB
4. UTILITY LOCATIONS TO BE DETERMINED
5. ACCESS STAIRWAYS ARE PROVIDED AT SYSTEMS SITES (APPROX. 2.5 MILE INTERVALS). LADDER ACCESS TO VIADUCTS IS PROVIDED AT 2500 FT INTERVALS WITH ACCESS ROAD AND TURNING CIRCLE WHERE NECESSARY.

LEGEND:

(1) STRUCTURE APPROACH SLAB

(2) RETAINING WALL

* ESTIMATED 100-YEAR FLOOD ELEVATION, SEE "FRESNO TO BAKERSFIELD CORRIDOR HYDROLOGY, HYDRAULICS AND DRAINAGE 15% DRAFT REPORT".

CURVE DATA

(14)

R = 50500.0'
Δ = 24° 16' 19.0""
T = 10859.4'
L = 21393.1'

40 0 40 80
1"=40'

04/02/2014 - RFP No.: HSR 13-57

| REV | DATE | BY | CHK | APP | DESCRIPTION |
|---|---|---|---|---|---|

DESIGNED BY M. FISHER
DRAWN BY F. PALERMO
CHECKED BY A. ARMSTRONG
IN CHARGE R. COFFIN
DATE 12/31/13

**RECORD SET 15% DESIGN SUBMISSION - NOT FOR CONSTRUCTION**

URS | HMM | ARUP
CALIFORNIA HIGH-SPEED TRAIN

CALIFORNIA HIGH-SPEED RAIL AUTHORITY

**CALIFORNIA HIGH-SPEED TRAIN PROJECT**
**FRESNO TO BAKERSFIELD**
ALLENSWORTH BYPASS SUBSECTION
ALIGNMENT A1
DEER CREEK VIADUCT
PLAN AND ELEVATION

CONTRACT NO. HSR 06-0003
DRAWING NO. SV1507
SCALE AS SHOWN
SHEET NO. 8 OF 9

frank.palermo 12/23/2013 12:36:37 PM c:\pwworking\hmm\external\frank.palermo01-arup.com\d0125274\FB-SV-1507-A1.dgn

| COLUMN DIAMETERS | |
|---|---|
| COLUMN HEIGHT | DIAMETER |
| 0-80 | 8 FT |
| 20-40 | 10 FT |
| 40-50 | 12 FT |
| 50-60 | 15 FT |
| 60-80 | 20 FT |
| 80-100 | 25 FT |

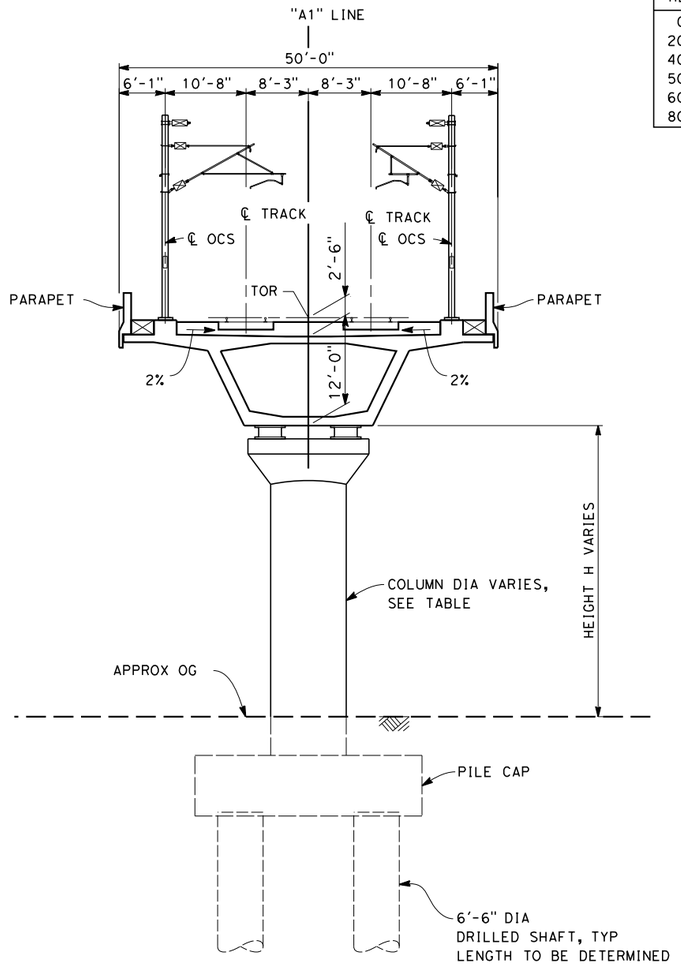


## SECTION A

SCALE: 1" = 10'

STA 4005+25 THROUGH 4067+65

10 0 10 20
1"-10'

04/02/2014 - RFP No.: HSR 13-57

| REV | DATE | BY | CHK | APP | DESCRIPTION |
|---|---|---|---|---|---|

DESIGNED BY Y. REN
DRAWN BY J. REILLY
CHECKED BY A. ARMSTRONG
IN CHARGE R. COFFIN
DATE 12/31/13

**RECORD SET 15% DESIGN SUBMISSION - NOT FOR CONSTRUCTION**

URS | HMM | ARUP
CALIFORNIA HIGH-SPEED TRAIN

CALIFORNIA
HIGH-SPEED RAIL AUTHORITY

**CALIFORNIA HIGH-SPEED TRAIN PROJECT**
**FRESNO TO BAKERSFIELD**
ALLENSWORTH BYPASS SUBSECTION
ALIGNMENT A1
DEER CREEK VIADUCT
TYPICAL SECTIONS

CONTRACT NO. HSR 06-0003
DRAWING NO. SV1508
SCALE AS SHOWN
SHEET NO. 9 OF 9

frank.palermo 12/23/2013 12:37:03 PM c:\pwworking\hmm\external\frank.palermo01-arup.com\d0125274\FB-SV-1508-A1.dgn

# CALIFORNIA HIGH-SPEED TRAIN

## Roadway and Grade Separation Plans

# RECORD SET 15% DESIGN SUBMISSION

# Fresno to Bakersfield

## Plans and Profiles and Cross Sections

December 2013

CALIFORNIA High-Speed Rail Authority

04/02/2014 - RFP No.: HSR 13-57

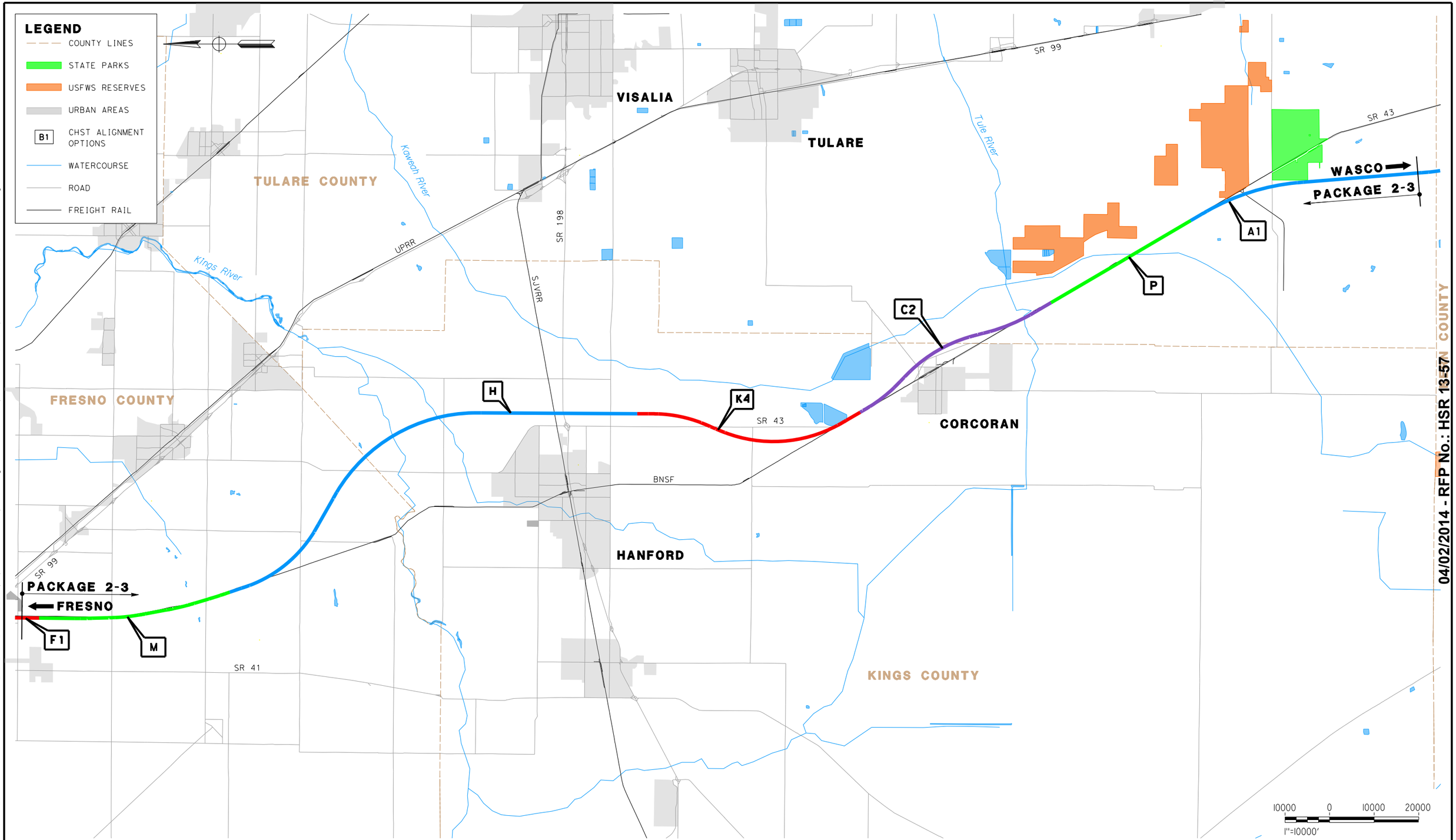


c:\pwworking\hmm\external\paul.tonkin01-arup.com\d0180522\2S-TT-B0001.dgn
CAHSRP-r1.tbl CHSR_PDF_half_color_200dpi.plt
1/31/2014 9:07:23 AM
paul.tonkin

04/02/2014 - RFP No.: HSR 13-57

| REV | DATE | BY | CHK | APP | DESCRIPTION |
|---|---|---|---|---|---|

DESIGNED BY K. SEYMOUR
DRAWN BY P. TONKIN
CHECKED BY D. HUNT
IN CHARGE R. COFFIN
DATE 02/04/14

**PROPOSED PRELIMINARY DESIGN**

**NOT FOR CONSTRUCTION**

URS | HMM | ARUP
CALIFORNIA HIGH-SPEED TRAIN

CALIFORNIA
HIGH-SPEED RAIL AUTHORITY

# CALIFORNIA HIGH-SPEED TRAIN PROJECT
# FRESNO TO BAKERSFIELD
PACKAGE 2-3
ALIGNMENT
LOCATION MAP

CONTRACT NO. HSR 06-0003
DRAWING NO. TT-B0001
SCALE AS SHOWN
SHEET NO. 1 OF 6

## GENERAL SHEETS

| DRAWING No | DRAWING DESCRIPTION | SHEET No |
|---|---|---|
| TT-B0001 | ALIGNMENT - LOCATION MAP | 1 OF 6 |
| GE-A0021 | ROADWAY & GRADE SEPARATION - INDEX OF SHEETS | 2 OF 6 |
| GE-A0022 | ROADWAY & GRADE SEPARATION - INDEX OF SHEETS | 3 OF 6 |
| GE-A0023 | ROADWAY & GRADE SEPARATION - INDEX OF SHEETS | 4 OF 6 |
| CB0010 | GENERAL - ABBREVIATIONS & LEGENDS | 5 OF 6 |
| CB0011 | GENERAL - ABBREVIATIONS & LEGENDS | 6 OF 6 |

## ALIGNMENT M - MONMOUTH SUBSECTION

| DRAWING No | DRAWING DESCRIPTION | SHEET No |
|---|---|---|
| CB0050 | MONMOUTH SUBSECTION - ALIGNMENT M - ROADWAY/GRADE SEPARATION - KEY MAP | 1 OF 32 |
| CT1101 | MONMOUTH SUBSECTION - ALIGNMENT M - GRADE SEPARATION LAYOUT - E LINCOLN AVE | 2 OF 32 |
| CT1103 | MONMOUTH SUBSECTION - ALIGNMENT M - GRADE SEPARATION LAYOUT - E ADAMS AVE | 3 OF 32 |
| CT1104 | MONMOUTH SUBSECTION - ALIGNMENT M - GRADE SEPARATION LAYOUT - E SOUTH AVE | 4 OF 32 |
| CT1106 | MONMOUTH SUBSECTION - ALIGNMENT M - GRADE SEPARATION LAYOUT - E MANNING AVE | 5 OF 32 |
| CT1107 | MONMOUTH SUBSECTION - ALIGNMENT M - GRADE SEPARATION LAYOUT - E MANNING AVE | 6 OF 32 |
| CT1109 | MONMOUTH SUBSECTION - ALIGNMENT M - GRADE SEPARATION LAYOUT - E FLORAL AVE | 7 OF 32 |
| CT1110 | MONMOUTH SUBSECTION - ALIGNMENT M - GRADE SEPARATION LAYOUT - E FLORAL AVE | 8 OF 32 |
| CT1111 | MONMOUTH SUBSECTION - ALIGNMENT M - GRADE SEPARATION LAYOUT - E NEBRASKA AVE | 9 OF 32 |
| CT1112 | MONMOUTH SUBSECTION - ALIGNMENT M - GRADE SEPARATION LAYOUT - E NEBRASKA AVE | 10 OF 32 |
| CT1113 | MONMOUTH SUBSECTION - ALIGNMENT M - GRADE SEPARATION LAYOUT - E MOUNTAIN VIEW AVE | 11 OF 32 |
| CT1114 | MONMOUTH SUBSECTION - ALIGNMENT M - GRADE SEPARATION LAYOUT - E MOUNTAIN VIEW AVE | 12 OF 32 |
| CT1115 | MONMOUTH SUBSECTION - ALIGNMENT M - ROADWAY LAYOUT - S CHESTNUT AVE (NORTH) | 13 OF 32 |
| CT1116 | MONMOUTH SUBSECTION - ALIGNMENT M - ROADWAY LAYOUT - S CHESTNUT AVE (SOUTH) | 14 OF 32 |
| CT2101 | MONMOUTH SUBSECTION - ALIGNMENT M - GRADE SEPARATION PROFILE - E LINCOLN AVE AND S MAPLE AT E LINCOLN AVE | 15 OF 32 |
| CT2102 | MONMOUTH SUBSECTION - ALIGNMENT M - ROADWAY PROFILE - S CEDAR AND S MAPLE AT E ADAMS | 16 OF 32 |
| CT2103 | MONMOUTH SUBSECTION - ALIGNMENT M - GRADE SEPARATION PROFILE - E ADAMS AVE | 17 OF 32 |
| CT2104 | MONMOUTH SUBSECTION - ALIGNMENT M - GRADE SEPARATION PROFILE - E SOUTH AVE AND S CEDAR AT E SOUTH AVE | 18 OF 32 |
| CT2105 | MONMOUTH SUBSECTION - ALIGNMENT M - ROADWAY PROFILE - S MAPLE AT E MANNING | 19 OF 32 |
| CT2106 | MONMOUTH SUBSECTION - ALIGNMENT M - GRADE SEPARATION PROFILE - E MANNING AVE | 20 OF 32 |
| CT2107 | MONMOUTH SUBSECTION - ALIGNMENT M - GRADE SEPARATION PROFILE - E MANNING AVE | 21 OF 32 |
| CT2108 | MONMOUTH SUBSECTION - ALIGNMENT M - GRADE SEPARATION PROFILE - E FLORAL AVE | 22 OF 32 |
| CT2109 | MONMOUTH SUBSECTION - ALIGNMENT M - GRADE SEPARATION PROFILE - E FLORAL AVE | 23 OF 32 |
| CT2110 | MONMOUTH SUBSECTION - ALIGNMENT M - GRADE SEPARATION PROFILE - E NEBRASKA AVE | 24 OF 32 |
| CT2111 | MONMOUTH SUBSECTION - ALIGNMENT M - GRADE SEPARATION PROFILE - E NEBRASKA AVE | 25 OF 32 |
| CT2112 | MONMOUTH SUBSECTION - ALIGNMENT M - ROADWAY PROFILE - S CHESTNUT AT E NEBRASKA AVE | 26 OF 32 |
| CT2113 | MONMOUTH SUBSECTION - ALIGNMENT M - GRADE SEPARATION PROFILE - E MOUNTAIN VIEW AVE | 27 OF 32 |
| CT2114 | MONMOUTH SUBSECTION - ALIGNMENT M - GRADE SEPARATION PROFILE - E MOUNTAIN VIEW AVE | 28 OF 32 |
| CT2115 | MONMOUTH SUBSECTION - ALIGNMENT M - GRADE SEPARATION PROFILE - S CHESTNUT AVE (NORTH) | 29 OF 32 |
| CT2116 | MONMOUTH SUBSECTION - ALIGNMENT M - GRADE SEPARATION PROFILE - S CHESTNUT AVE (SOUTH) | 30 OF 32 |
| CT3010 | MONMOUTH SUBSECTION - ALIGNMENT M - ROADWAY/GRADE SEPARATION - TYPICAL CROSS SECTIONS | 31 OF 32 |
| CT3011 | MONMOUTH SUBSECTION - ALIGNMENT M - ROADWAY/GRADE SEPARATION - TYPICAL CROSS SECTIONS | 32 OF 32 |

## ALIGNMENT H - HANFORD SUBSECTION

| DRAWING No | DRAWING DESCRIPTION | SHEET No |
|---|---|---|
| CB0055 | HANFORD SUBSECTION - ALIGNMENT H - ROADWAY/GRADE SEPARATION - KEY MAP | 1 OF 60 |
| CT1117 | HANFORD SUBSECTION - ALIGNMENT H - GRADE SEPARATION LAYOUT - S CLOVIS AVE | 2 OF 60 |
| CT1118 | HANFORD SUBSECTION - ALIGNMENT H - GRADE SEPARATION LAYOUT - S CLOVIS AVE | 3 OF 60 |
| CT1119 | HANFORD SUBSECTION - ALIGNMENT H - GRADE SEPARATION LAYOUT - E ELKHORN AVE | 4 OF 60 |
| CT1120 | HANFORD SUBSECTION - ALIGNMENT H - GRADE SEPARATION LAYOUT - E ELKHORN AVE | 5 OF 60 |
| CT1121 | HANFORD SUBSECTION - ALIGNMENT H - GRADE SEPARATION LAYOUT - S FOWLER AVE | 6 OF 60 |
| CT1122 | HANFORD SUBSECTION - ALIGNMENT H - GRADE SEPARATION LAYOUT - S FOWLER AVE | 7 OF 60 |
| CT1123 | HANFORD SUBSECTION - ALIGNMENT H - GRADE SEPARATION LAYOUT - E DAVIS AVE | 8 OF 60 |
| CT1124 | HANFORD SUBSECTION - ALIGNMENT H - GRADE SEPARATION LAYOUT - E DAVIS AVE | 9 OF 60 |
| CT1130 | HANFORD SUBSECTION - ALIGNMENT H - GRADE SEPARATION LAYOUT - DOVER AVE | 10 OF 60 |
| CT1131 | HANFORD SUBSECTION - ALIGNMENT H - GRADE SEPARATION LAYOUT - DOVER AVE | 11 OF 60 |
| CT1132 | HANFORD SUBSECTION - ALIGNMENT H - GRADE SEPARATION LAYOUT - 8TH AVE (NORTH) | 12 OF 60 |
| CT1133 | HANFORD SUBSECTION - ALIGNMENT H - GRADE SEPARATION LAYOUT - 8TH AVE (SOUTH) | 13 OF 60 |
| CT1134 | HANFORD SUBSECTION - ALIGNMENT H - GRADE SEPARATION LAYOUT - EXCELSIOR AVE | 14 OF 60 |
| CT1135 | HANFORD SUBSECTION - ALIGNMENT H - GRADE SEPARATION LAYOUT - EXCELSIOR AVE | 15 OF 60 |
| CT1136 | HANFORD SUBSECTION - ALIGNMENT H - GRADE SEPARATION LAYOUT - ELDER AVE | 16 OF 60 |
| CT1137 | HANFORD SUBSECTION - ALIGNMENT H - GRADE SEPARATION LAYOUT - ELDER AVE | 17 OF 60 |
| CT1138 | HANFORD SUBSECTION - ALIGNMENT H - GRADE SEPARATION LAYOUT - FLINT AVE | 18 OF 60 |
| CT1139 | HANFORD SUBSECTION - ALIGNMENT H - GRADE SEPARATION LAYOUT - FLINT AVE | 19 OF 60 |
| CT1140 | HANFORD SUBSECTION - ALIGNMENT H - GRADE SEPARATION LAYOUT - FARGO AVE | 20 OF 60 |
| CT1141 | HANFORD SUBSECTION - ALIGNMENT H - GRADE SEPARATION LAYOUT - FARGO AVE | 21 OF 60 |
| CT1144 | HANFORD SUBSECTION - ALIGNMENT H - GRADE SEPARATION LAYOUT - HANFORD ARMONA RD | 22 OF 60 |
| CT1145 | HANFORD SUBSECTION - ALIGNMENT H - GRADE SEPARATION LAYOUT - HANFORD ARMONA RD | 23 OF 60 |
| CT1146 | HANFORD SUBSECTION - ALIGNMENT H - GRADE SEPARATION LAYOUT - HOUSTON AVE | 24 OF 60 |
| CT1147 | HANFORD SUBSECTION - ALIGNMENT H - GRADE SEPARATION LAYOUT - HOUSTON AVE | 25 OF 60 |
| CT1148 | HANFORD SUBSECTION - ALIGNMENT H - GRADE SEPARATION LAYOUT - IONA AVE | 26 OF 60 |
| CT1149 | HANFORD SUBSECTION - ALIGNMENT H - GRADE SEPARATION LAYOUT - IONA AVE | 27 OF 60 |
| CT2117 | HANFORD SUBSECTION - ALIGNMENT H - GRADE SEPARATION PROFILE - S CLOVIS AVE | 28 OF 60 |
| CT2118 | HANFORD SUBSECTION - ALIGNMENT H - GRADE SEPARATION PROFILE - S CLOVIS AVE | 29 OF 60 |
| CT2119 | HANFORD SUBSECTION - ALIGNMENT H - GRADE SEPARATION PROFILE - E ELKHORN AVE | 30 OF 60 |
| CT2120 | HANFORD SUBSECTION - ALIGNMENT H - GRADE SEPARATION PROFILE - E ELKHORN AVE | 31 OF 60 |
| CT2121 | HANFORD SUBSECTION - ALIGNMENT H - GRADE SEPARATION PROFILE - S FOWLER AVE | 32 OF 60 |
| CT2122 | HANFORD SUBSECTION - ALIGNMENT H - GRADE SEPARATION PROFILE - S FOWLER AVE | 33 OF 60 |
| CT2123 | HANFORD SUBSECTION - ALIGNMENT H - GRADE SEPARATION PROFILE - E DAVIS AVE | 34 OF 60 |
| CT2124 | HANFORD SUBSECTION - ALIGNMENT H - GRADE SEPARATION PROFILE - E DAVIS AVE | 35 OF 60 |
| CT2130 | HANFORD SUBSECTION - ALIGNMENT H - GRADE SEPARATION PROFILE - DOVER AVE | 36 OF 60 |
| CT2131 | HANFORD SUBSECTION - ALIGNMENT H - GRADE SEPARATION PROFILE - DOVER AVE | 37 OF 60 |
| CT2132 | HANFORD SUBSECTION - ALIGNMENT H - GRADE SEPARATION PROFILE - 8TH AVE (NORTH) | 38 OF 60 |
| CT2133 | HANFORD SUBSECTION - ALIGNMENT H - GRADE SEPARATION PROFILE - 8TH AVE (SOUTH) | 39 OF 60 |
| CT2134 | HANFORD SUBSECTION - ALIGNMENT H - GRADE SEPARATION PROFILE - EXCELSIOR AVE | 40 OF 60 |
| CT2135 | HANFORD SUBSECTION - ALIGNMENT H - GRADE SEPARATION PROFILE - EXCELSIOR AVE | 41 OF 60 |
| CT2136 | HANFORD SUBSECTION - ALIGNMENT H - GRADE SEPARATION PROFILE - ELDER AVE | 42 OF 60 |
| CT2137 | HANFORD SUBSECTION - ALIGNMENT H - GRADE SEPARATION PROFILE - ELDER AVE | 43 OF 60 |
| CT2138 | HANFORD SUBSECTION - ALIGNMENT H - GRADE SEPARATION PROFILE - FLINT AVE | 44 OF 60 |
| CT2139 | HANFORD SUBSECTION - ALIGNMENT H - GRADE SEPARATION PROFILE - FLINT AVE | 45 OF 60 |
| CT2140 | HANFORD SUBSECTION - ALIGNMENT H - GRADE SEPARATION PROFILE - FARGO AVE | 46 OF 60 |
| CT2141 | HANFORD SUBSECTION - ALIGNMENT H - GRADE SEPARATION PROFILE - FARGO AVE | 47 OF 60 |
| CT2142 | HANFORD SUBSECTION - ALIGNMENT H - GRADE SEPARATION PROFILE - 7 1/2 AVE CONNECTOR | 48 OF 60 |
| CT2143 | HANFORD SUBSECTION - ALIGNMENT H - GRADE SEPARATION PROFILE - 7 1/2 AVE | 49 OF 60 |
| CT2144 | HANFORD SUBSECTION - ALIGNMENT H - GRADE SEPARATION PROFILE - HANFORD ARMONA RD | 50 OF 60 |

04/02/2014 - RFP No.: HSR 13-57

| REV | DATE | BY | CHK | APP | DESCRIPTION |
|---|---|---|---|---|---|

DESIGNED BY P. TONKIN
DRAWN BY J. VALENZUELA
CHECKED BY K. SEYMOUR
IN CHARGE R. COFFIN
DATE 02/04/14

**PROPOSED PRELIMINARY DESIGN**

**NOT FOR CONSTRUCTION**

URS | HMM | ARUP
CALIFORNIA HIGH-SPEED TRAIN

CALIFORNIA
HIGH-SPEED RAIL AUTHORITY

# CALIFORNIA HIGH-SPEED TRAIN PROJECT
# FRESNO TO BAKERSFIELD
ROADWAY & GRADE SEPARATION
INDEX OF SHEETS
SHEET 1 OF 3

CONTRACT NO. HSR 06-0003
DRAWING NO. GE-A0021
SCALE NO SCALE
SHEET NO. 2 OF 6

paul.tonkin 1/28/2014 12:17:47 PM CAHSRP-r1.tbl CHSR_PDF_half_black_200dpi.plt c:\pwworking\hmm\external\paul.tonkin01-arup.com\d0180522\2S-GE-A0021.dgn

## ALIGNMENT H - HANFORD SUBSECTION, CONT'D

| DRAWING No | DRAWING DESCRIPTION | SHEET No |
|---|---|---|
| CT2145 | HANFORD SUBSECTION - ALIGNMENT H - GRADE SEPARATION PROFILE - HANFORD ARMONA RD | 51 OF 60 |
| CT2146 | HANFORD SUBSECTION - ALIGNMENT H - GRADE SEPARATION PROFILE - HOUSTON AVE | 52 OF 60 |
| CT2147 | HANFORD SUBSECTION - ALIGNMENT H - GRADE SEPARATION PROFILE - HOUSTON AVE | 53 OF 60 |
| CT2148 | HANFORD SUBSECTION - ALIGNMENT H - GRADE SEPARATION PROFILE - IONA AVE | 54 OF 60 |
| CT2149 | HANFORD SUBSECTION - ALIGNMENT H - GRADE SEPARATION PROFILE - IONA AVE | 55 OF 60 |
| CR1251 | HANFORD SUBSECTION - ALIGNMENT H - ROADWAY LAYOUT - E CLARKSON AVE & S MINNEWAWA AVE | 56 OF 60 |
| CR2251 | HANFORD SUBSECTION - ALIGNMENT H - ROADWAY PROFILE - E CLARKSON AVE & S MINNEWAWA AVE | 57 OF 60 |
| CR2252 | HANFORD SUBSECTION - ALIGNMENT H - ROADWAY PROFILE - E CLARKSON AVE & S MINNEWAWA AVE | 58 OF 60 |
| CT3030 | HANFORD SUBSECTION - ALIGNMENT H - ROADWAY/GRADE SEPARATION - TYPICAL CROSS SECTIONS | 59 OF 60 |
| CT3031 | HANFORD SUBSECTION - ALIGNMENT H - ROADWAY/GRADE SEPARATION - TYPICAL CROSS SECTIONS | 60 OF 60 |

## ALIGNMENT K4 - KAWEAH SUBSECTION

| DRAWING No | DRAWING DESCRIPTION | SHEET No |
|---|---|---|
| CB0065 | KAWEAH SUBSECTION - ALIGNMENT K4 - ROADWAY/GRADE SEPARATION - KEY MAP | 1 OF 23 |
| CT1220 | KAWEAH SUBSECTION - ALIGNMENT K4 - GRADE SEPARATION LAYOUT - IDAHO AVE | 2 OF 23 |
| CT1221 | KAWEAH SUBSECTION - ALIGNMENT K4 - GRADE SEPARATION LAYOUT - IDAHO AVE | 3 OF 23 |
| CT1222 | KAWEAH SUBSECTION - ALIGNMENT K4 - GRADE SEPARATION LAYOUT - JACKSON AVE | 4 OF 23 |
| CT1223 | KAWEAH SUBSECTION - ALIGNMENT K4 - GRADE SEPARATION LAYOUT - JACKSON AVE | 5 OF 23 |
| CT1224 | KAWEAH SUBSECTION - ALIGNMENT K4 - GRADE SEPARATION LAYOUT - STATE ROUTE 43 (JERSEY AVE) | 6 OF 23 |
| CT1225 | KAWEAH SUBSECTION - ALIGNMENT K4 - GRADE SEPARATION LAYOUT - STATE ROUTE 43 (JERSEY AVE) | 7 OF 23 |
| CT1226 | KAWEAH SUBSECTION - ALIGNMENT K4 - GRADE SEPARATION LAYOUT - KENT AVE | 8 OF 23 |
| CT1227 | KAWEAH SUBSECTION - ALIGNMENT K4 - GRADE SEPARATION LAYOUT - KENT AVE | 9 OF 23 |
| CT1228 | KAWEAH SUBSECTION - ALIGNMENT K4 - GRADE SEPARATION LAYOUT - KANSAS AVE | 10 OF 23 |
| CT1229 | KAWEAH SUBSECTION - ALIGNMENT K4 - GRADE SEPARATION LAYOUT - KANSAS AVE | 11 OF 23 |
| CT2220 | KAWEAH SUBSECTION - ALIGNMENT K4 - GRADE SEPARATION PROFILE - IDAHO AVE | 12 OF 23 |
| CT2221 | KAWEAH SUBSECTION - ALIGNMENT K4 - GRADE SEPARATION PROFILE - IDAHO AVE | 13 OF 23 |
| CT2222 | KAWEAH SUBSECTION - ALIGNMENT K4 - GRADE SEPARATION PROFILE - JACKSON AVE | 14 OF 23 |
| CT2223 | KAWEAH SUBSECTION - ALIGNMENT K4 - GRADE SEPARATION PROFILE - JACKSON AVE | 15 OF 23 |
| CT2224 | KAWEAH SUBSECTION - ALIGNMENT K4 - GRADE SEP PROFILE & SUPERELEVATION DIAGRAM - STATE ROUTE 43 (JERSEY AVE) | 16 OF 23 |
| CT2225 | KAWEAH SUBSECTION - ALIGNMENT K4 - GRADE SEP PROFILE & SUPERELEVATION DIAGRAM - STATE ROUTE 43 (JERSEY AVE) | 17 OF 23 |
| CT2226 | KAWEAH SUBSECTION - ALIGNMENT K4 - GRADE SEPARATION PROFILE - KENT AVE | 18 OF 23 |
| CT2227 | KAWEAH SUBSECTION - ALIGNMENT K4 - GRADE SEPARATION PROFILE - KENT AVE | 19 OF 23 |
| CT2228 | KAWEAH SUBSECTION - ALIGNMENT K4 - GRADE SEPARATION PROFILE - KANSAS AVE | 20 OF 23 |
| CT2229 | KAWEAH SUBSECTION - ALIGNMENT K4 - GRADE SEPARATION PROFILE - KANSAS AVE | 21 OF 23 |
| CT3230 | KAWEAH SUBSECTION - ALIGNMENT K4 - ROADWAY/GRADE SEPARATION - TYPICAL CROSS SECTIONS | 22 OF 23 |
| CT3231 | KAWEAH SUBSECTION - ALIGNMENT K4 - ROADWAY/GRADE SEPARATION - TYPICAL CROSS SECTIONS | 23 OF 23 |

## ALIGNMENT C2 - CORCORAN SUBSECTION

| DRAWING No | DRAWING DESCRIPTION | SHEET No |
|---|---|---|
| CB0075 | CORCORAN BYPASS SUBSECTION - ALIGNMENT C2 - ROADWAY/GRADE SEPARATION - KEY MAP | 1 OF 18 |
| CT1239 | CORCORAN BYPASS SUBSECTION - ALIGNMENT C2 - GRADE SEPARATION LAYOUT - NEVADA AVE | 2 OF 18 |
| CT1240 | CORCORAN BYPASS SUBSECTION - ALIGNMENT C2 - GRADE SEPARATION LAYOUT - NEVADA AVE CONNECTOR | 3 OF 18 |
| CT1244 | CORCORAN BYPASS SUBSECTION - ALIGNMENT C2 - GRADE SEPARATION LAYOUT - CORCORAN HWY | 4 OF 18 |
| CT1248 | CORCORAN BYPASS SUBSECTION - ALIGNMENT C2 - GRADE SEPARATION LAYOUT - WHITLEY AVE/ STATE ROUTE 137 | 5 OF 18 |
| CT2239 | CORCORAN BYPASS SUBSECTION - ALIGNMENT C2 - GRADE SEPARATION PROFILE - NEVADA AVE | 6 OF 18 |
| CT2240 | CORCORAN BYPASS SUBSECTION - ALIGNMENT C2 - GRADE SEPARATION PROFILE - NEVADA AVE | 7 OF 18 |
| CT2244 | CORCORAN BYPASS SUBSECTION - ALIGNMENT C2 - GRADE SEPARATION PROFILE - CORCORAN HWY | 8 OF 18 |
| CT2245 | CORCORAN BYPASS SUBSECTION - ALIGNMENT C2 - GRADE SEPARATION PROFILE - CORCORAN HWY | 9 OF 18 |
| CT2246 | CORCORAN BYPASS SUBSECTION - ALIGNMENT C2 - GRADE SEPARATION PROFILE - 5TH AVE | 10 OF 18 |
| CT2247 | CORCORAN BYPASS SUBSECTION - ALIGNMENT C2 - GRADE SEPARATION PROFILE | 11 OF 18 |
| CT2248 | CORCORAN BYPASS SUBSECTION - ALIGNMENT C2 - GRADE SEPARATION PROFILE | 12 OF 18 |
| CR1230 | CORCORAN BYPASS SUBSECTION - ALIGNMENT C2 - ROADWAY LAYOUT | 13 OF 18 |
| CR1231 | CORCORAN BYPASS SUBSECTION - ALIGNMENT C2 - ROADWAY LAYOUT | 14 OF 18 |
| CT3042 | CORCORAN BYPASS SUBSECTION - ALIGNMENT C2 - ROADWAY/GRADE SEPARATION | 17 OF 18 |
| CT3043 | CORCORAN BYPASS SUBSECTION - ALIGNMENT C2 - ROADWAY/GRADE SEPARATION | 18 OF 18 |

## ALIGNMENT P - PIXLEY SUBSECTION

| DRAWING No | DRAWING DESCRIPTION | SHEET No |
|---|---|---|
| CB0100 | PIXLEY SUBSECTION - ALIGNMENT P - ROADWAY/GRADE SEPARATION - KEY MAP | 1 OF 16 |
| CT1401 | PIXLEY SUBSECTION - ALIGNMENT P - GRADE SEPARATION LAYOUT - AVE 128 | 2 OF 16 |
| CT1411 | PIXLEY SUBSECTION - ALIGNMENT P - GRADE SEPARATION LAYOUT - HESSE AVE | 3 OF 16 |
| CT1421 | PIXLEY SUBSECTION - ALIGNMENT P - GRADE SEPARATION LAYOUT - AVE 112 | 4 OF 16 |
| CT1431 | PIXLEY SUBSECTION - ALIGNMENT P - GRADE SEPARATION LAYOUT - AVE 88 | 5 OF 16 |
| CT2401 | PIXLEY SUBSECTION - ALIGNMENT P - GRADE SEPARATION PROFILE - AVE 128 | 6 OF 16 |
| CT2402 | PIXLEY SUBSECTION - ALIGNMENT P - GRADE SEPARATION PROFILE - AVE 128 | 7 OF 16 |
| CT2411 | PIXLEY SUBSECTION - ALIGNMENT P - GRADE SEPARATION PROFILE - HESSE AVE | 8 OF 16 |
| CT2412 | PIXLEY SUBSECTION - ALIGNMENT P - GRADE SEPARATION PROFILE - HESSE AVE | 9 OF 16 |
| CT2421 | PIXLEY SUBSECTION - ALIGNMENT P - GRADE SEPARATION PROFILE - AVE 112 | 10 OF 16 |
| CT2422 | PIXLEY SUBSECTION - ALIGNMENT P - GRADE SEPARATION PROFILE - AVE 112 | 11 OF 16 |
| CT2423 | PIXLEY SUBSECTION - ALIGNMENT P - GRADE SEPARATION PROFILE - AVE 112 CONNECTOR | 12 OF 16 |
| CT2431 | PIXLEY SUBSECTION - ALIGNMENT P - GRADE SEPARATION PROFILE - AVE 88 | 13 OF 16 |
| CT2432 | PIXLEY SUBSECTION - ALIGNMENT P - GRADE SEPARATION PROFILE - AVE 88 | 14 OF 16 |
| CT2433 | PIXLEY SUBSECTION - ALIGNMENT P - GRADE SEPARATION PROFILE - AVE 88 CONNECTOR | 15 OF 16 |
| CT3060 | PIXLEY SUBSECTION - ALIGNMENT P - ROADWAY/GRADE SEPARATION - TYPICAL CROSS SECTIONS | 16 OF 16 |

04/02/2014 - RFP No.: HSR 13-57

c:\pwworking\hmm\external\eron.sudhausen-arup.com\d0180522\2S-GE-A0022.dgn
$PLTDRVS$
$PENTBLS$
eron.sudhausen 2/27/2014 1:52:02 PM

| REV | DATE | BY | CHK | APP | DESCRIPTION |
|---|---|---|---|---|---|

DESIGNED BY P. TONKIN
DRAWN BY J. VALENZUELA
CHECKED BY K. SEYMOUR
IN CHARGE R. COFFIN
DATE 02/04/14

**PROPOSED PRELIMINARY DESIGN**

**NOT FOR CONSTRUCTION**

URS | HMM | ARUP
California High-Speed Train

CALIFORNIA HIGH-SPEED RAIL AUTHORITY

**CALIFORNIA HIGH-SPEED TRAIN PROJECT**
**FRESNO TO BAKERSFIELD**
ROADWAY & GRADE SEPARATION
INDEX OF SHEETS
SHEET 2 OF 3

CONTRACT NO. HSR 06-0003
DRAWING NO. GE-A0022
SCALE NO SCALE
SHEET NO. 3 OF 6

# ALIGNMENT A1 - ALLENSWORTH SUBSECTION

| DRAWING No | DRAWING DESCRIPTION | SHEET No |
|---|---|---|
| CB0110 | ALLENSWORTH BYPASS SUBSECTION - ALIGNMENT A1 - ROADWAY/GRADE SEPARATION - KEY MAP | 1 OF 24 |
| CT1501 | ALLENSWORTH BYPASS SUBSECTION - ALIGNMENT A1 - GRADE SEPARATION LAYOUT - COUNTY RD J22 | 2 OF 24 |
| ~~CT1511~~ | ~~ALLENSWORTH BYPASS SUBSECTION - ALIGNMENT A1 - GRADE SEPARATION LAYOUT - GARCES HWY~~ | ~~3 OF 24~~ |
| ~~CT1512~~ | ~~ALLENSWORTH BYPASS SUBSECTION - ALIGNMENT A1 - GRADE SEPARATION LAYOUT - SCOFIELD AVE~~ | ~~4 OF 24~~ |
| ~~CT1513~~ | ~~ALLENSWORTH BYPASS SUBSECTION - ALIGNMENT A1 - GRADE SEPARATION LAYOUT - SCOFIELD AVE~~ | ~~5 OF 24~~ |
| ~~CT1514~~ | ~~ALLENSWORTH BYPASS SUBSECTION - ALIGNMENT A1 - GRADE SEPARATION LAYOUT - SCOFIELD AVE~~ | ~~6 OF 24~~ |
| ~~CT1521~~ | ~~ALLENSWORTH BYPASS SUBSECTION - ALIGNMENT A1 - GRADE SEPARATION LAYOUT - POND RD~~ | ~~7 OF 24~~ |
| ~~CT1522~~ | ~~ALLENSWORTH BYPASS SUBSECTION - ALIGNMENT A1 - GRADE SEPARATION LAYOUT - POND RD~~ | ~~8 OF 24~~ |
| ~~CT1523~~ | ~~ALLENSWORTH BYPASS SUBSECTION - ALIGNMENT A1 - GRADE SEPARATION LAYOUT - MAGNOLIA AVE~~ | ~~9 OF 24~~ |
| ~~CT1531~~ | ~~ALLENSWORTH BYPASS SUBSECTION - ALIGNMENT A1 - GRADE SEPARATION LAYOUT - PETERSON RD~~ | ~~10 OF 24~~ |
| ~~CT1532~~ | ~~ALLENSWORTH BYPASS SUBSECTION - ALIGNMENT A1 - GRADE SEPARATION LAYOUT - PETERSON RD~~ | ~~11 OF 24~~ |
| CT2501 | ALLENSWORTH BYPASS SUBSECTION - ALIGNMENT A1 - GRADE SEPARATION PROFILE - COUNTY RD J22 | 12 OF 24 |
| ~~CT2510~~ | ~~ALLENSWORTH BYPASS SUBSECTION - ALIGNMENT A1 - GRADE SEPARATION PROFILE - GARCES HWY~~ | ~~13 OF 24~~ |
| ~~CT2511~~ | ~~ALLENSWORTH BYPASS SUBSECTION - ALIGNMENT A1 - GRADE SEPARATION PROFILE - GARCES HWY~~ | ~~14 OF 24~~ |
| ~~CT2512~~ | ~~ALLENSWORTH BYPASS SUBSECTION - ALIGNMENT A1 - GRADE SEPARATION PROFILE - SCOFIELD AVE~~ | ~~15 OF 24~~ |
| ~~CT2513~~ | ~~ALLENSWORTH BYPASS SUBSECTION - ALIGNMENT A1 - GRADE SEPARATION PROFILE - SCOFIELD AVE~~ | ~~16 OF 24~~ |
| ~~CT2514~~ | ~~ALLENSWORTH BYPASS SUBSECTION - ALIGNMENT A1 - GRADE SEPARATION PROFILE - SCOFIELD AVE~~ | ~~17 OF 24~~ |
| ~~CT2521~~ | ~~ALLENSWORTH BYPASS SUBSECTION - ALIGNMENT A1 - GRADE SEPARATION PROFILE - POND RD~~ | ~~18 OF 24~~ |
| ~~CT2522~~ | ~~ALLENSWORTH BYPASS SUBSECTION - ALIGNMENT A1 - GRADE SEPARATION PROFILE - POND RD~~ | ~~19 OF 24~~ |
| ~~CT2523~~ | ~~ALLENSWORTH BYPASS SUBSECTION - ALIGNMENT A1 - GRADE SEPARATION PROFILE - MAGNOLIA AVE~~ | ~~20 OF 24~~ |
| ~~CT2531~~ | ~~ALLENSWORTH BYPASS SUBSECTION - ALIGNMENT A1 - GRADE SEPARATION PROFILE - PETERSON RD~~ | ~~22 OF 24~~ |
| ~~CT2532~~ | ~~ALLENSWORTH BYPASS SUBSECTION - ALIGNMENT A1 - GRADE SEPARATION PROFILE - PETERSON RD~~ | ~~23 OF 24~~ |
| CT3070 | ALLENSWORTH BYPASS SUBSECTION - ALIGNMENT A1 - ROADWAY/GRADE SEPARATION - TYPICAL CROSS SECTIONS | 24 OF 24 |

paul.tonkin 1/31/2014 11:49:47 AM CAHSRP-r1.tbl CHSR_PDF_half_black_200dpi.plt c:\pwworking\nmm\external\paul.tonkin01-arup.com\d0180522\2S-GE-A0023.dgn

04/02/2014 - RFP No.: HSR 13-57

| REV | DATE | BY | CHK | APP | DESCRIPTION |
|---|---|---|---|---|---|
| | | | | | |

DESIGNED BY P. TONKIN
DRAWN BY J. VALENZUELA
CHECKED BY K. SEYMOUR
IN CHARGE R. COFFIN
DATE 02/04/14

**PROPOSED PRELIMINARY DESIGN**

**NOT FOR CONSTRUCTION**

URS | HMM | ARUP
CALIFORNIA HIGH-SPEED TRAIN

CALIFORNIA
HIGH-SPEED RAIL AUTHORITY

**CALIFORNIA HIGH-SPEED TRAIN PROJECT**
**FRESNO TO BAKERSFIELD**
ROADWAY & GRADE SEPARATION
INDEX OF SHEETS
SHEET 3 OF 3

CONTRACT NO. HSR 06-0003
DRAWING NO. GE-A0023
SCALE NO SCALE
SHEET NO. 4 OF 6

## A

| | |
|---|---|
| AB | AGGREGATE BASE |
| ABBC | ASBESTOS BONDED BITUMINOUS COATED |
| ABM | AIR-BLOWN MORTAR |
| ABN | ABANDON |
| ABUT | ABUTMENT |
| AC | ASPHALT CONCRETE |
| ACB | ASPHALT CONCRETE BASE |
| ACP | ASBESTOS CEMENT PIPE |
| ADL | ADDED DEAD LOAD |
| ADJ | ADJUST |
| AFES | ALTERNATIVE FLARED END SECTION |
| AHD | AHEAD |
| ALT | ALTERNATE |
| AM | TIME FROM MIDNIGHT TO NOON |
| AP | ALTERNATIVE PIPE |
| APC | ALTERNATIVE PIPE CULVERT |
| APPROX | APPROXIMATE |
| APU | ALTERNATIVE PIPE UNDERDRAIN |
| ARS | ACCELERATION RESPONSE SPECTRUM |
| AR | ACCESS RESTRICTION |
| AS | AGGREGATE SUBBASE |
| ASRP | ALUMINUM SPIRAL RIB PIPE |
| ASSY | ASSEMBLY |
| ATPB | ASPHALT TREATED PERMEABLE BASE |
| ATPM | ASPHALT TREATED PERMEABLE MATERIAL |
| AVE | AVENUE |
| AVG | AVERAGE |
| @ | AT |

## B

| | |
|---|---|
| BAGR | BRIDGE APPROACH GUARD RAILING |
| BB | BEGINNING OF BRIDGE |
| BC | BEGIN HORIZONTAL CURVE |
| BCC | BALANCED CANTILEVER CONSTRUCTION |
| BCR | BEGIN CURB RETURN |
| BEG | BEGIN |
| BIT CTD | BITUMINOUS COATED |
| BK | BACK |
| BKF | BACKFILL |
| BLDG | BUILDING |
| BLM | BRIDGE-LOG MILE |
| BLVD | BOULEVARD |
| BM | BENCH MARK |
| BND | BOUND |
| BNSF | BURLINGTON NORTH & SANTA FE |
| BOT | BOTTOM |
| BR | BRIDGE |
| BRG | BEARING |
| BTU | BRITISH THERMAL UNIT |
| BVC | BEGIN VERTICAL CURVE |
| BW | BARBED WIRE |

## C

| | |
|---|---|
| CAA | CABLE ANCHOR ASSEMBLY |
| CAP | CORRUGATED ALUMINUM PIPE |
| CAPA | CORRUGATED ALUMINUM PIPE ARCH |
| CAS | CONSTRUCTION AREA SIGN |
| CB | CONCRETE BARRIER |
| CBW | CONCRETE BLOCK WALL |
| C-C | CENTER TO CENTER |

## C CONTINUED

| | |
|---|---|
| CHSRA | CALIFORNIA HIGH SPEED RAIL AUTHORITY |
| CHST | CALIFORNIA HIGH SPEED TRAIN |
| CHSR | CALIFORNIA HIGH SPEED RAIL |
| CG | CENTER OF GRAVITY |
| CHNL | CHANNEL |
| CI | CAST IRON |
| CIDH | CAST-IN-DRILLED-HOLE |
| CIP,C-I-P | CAST-IN-PLACE, CAST IRON PIPE |
| CIPCP | CAST IN PLACE CONCRETE PIPE |
| CISS | CAST-IN-STEEL-SHELL |
| CJP | COMPLETE JOINT PENETRATION |
| CL | CENTERLINE, CLASS |
| CL2 | CLASS 2 |
| CL-6 | CHAIN LINK FENCE (6 FT) |
| CLR | CLEAR, CLEARANCE |
| CM | CORRUGATED METAL |
| CMP | CORRUGATED METAL PIPE |
| CO | COUNTY |
| COL | COLUMN |
| CONC | CONCRETE |
| COND | CONDUIT |
| CONN | CONNECTOR |
| CONST | CONSTRUCT, CONSTRUCTION |
| CONT | CONTINUOUS |
| COORD | COORDINATE |
| CP | CLEARANCE POINT |
| CR | CREEK |
| CRCP | CONTINUOUS REINFORCED CONCRETE PAVEMENT |
| CRSP | CONCRETED ROCK SLOPE PROTECTION |
| CS | CURVE TO SPIRAL |
| CSP | CORRUGATED STEEL PIPE |
| CSPA | CORRUGATED STEEL PIPE ARCH |
| CTB | CEMENT TREATED BASE |
| CTPB | CEMENT TREATED PERMEABLE BASE |
| CTPM | CEMENT TREATED PERMEABLE MATERIAL |
| CTRS | CENTERS |
| CVFPB | CENTRAL VALLEY FLOOD PROTECTION BOARD |
| CULV | CULVERT |
| ℄ | CENTERLINE |

## D

| | |
|---|---|
| D | DEPTH |
| DD | DOWNDRAIN, DIRECTIVE DRILLING |
| DBL | DOUBLE |
| DEG | DEGREE |
| DEL | DELINEATOR |
| DET | DETAIL, DETOUR |
| DF | DOUGLAS FIR |
| DI | DRAINAGE INLET, DROP INLET |
| DIA | DIAMETER |
| DIAPH | DIAPHRAGM |
| DIST | DISTANCE, DISTRICT |
| DMBB | DOUBLE METAL BEAM BARRIER |
| DR | DRIVE |
| DTBB | DOUBLE THRIE BEAM BARRIER |
| DWY | DRIVEWAY |

## E

| | |
|---|---|
| E | EAST, EASTING |
| EA | ACTUAL SUPERELEVATION |
| EU | UNBALANCED SUPERELEVATION |

## E CONTINUED

| | |
|---|---|
| EASE | EASEMENT |
| EB | END OF BRIDGE, EASTBOUND |
| EC | END HORIZONTAL CURVE |
| ECR | END CURB RETURN |
| ED | EDGE DRAIN |
| EDC | EDGE DRAIN CLEANOUT |
| EDO | EDGE DRAIN OUTLET |
| EDV | EDGE DRAIN VENT |
| ELEC | ELECTROLIER |
| ELECT | ELECTRIC |
| ELEV | ELEVATION |
| EMB | EMBANKMENT |
| ENGR | ENGINEER |
| EOD | EDGE OF DECK |
| EP | EDGE OF PAVEMENT |
| EQ | EQUATION, EQUAL |
| ES | EDGE OF SHOULDER |
| ETW | EDGE OF TRAVELED WAY |
| EVC | END VERTICAL CURVE |
| EW | ENDWALL |
| EXC | EXCAVATION |
| EXIST, EX. | EXISTING |
| EXP | EXPANSION |
| EXP JT | EXPANSION JOINT |
| EXWY | EXPRESSWAY |
| EXT | EXTERIOR |

## F

| | |
|---|---|
| F & C | FRAME AND COVER |
| F & G | FRAME AND GRATE |
| FB | FLOOR BEAM |
| F-B | FRESNO TO BAKERSFIELD |
| FDN | FOUNDATION |
| FEBT | FACING EASTBOUND TRAFFIC |
| FES | FLARED END SECTION |
| FF | FILTER FABRIC |
| FG | FINISHED GRADE |
| FH | FIRE HYDRANT |
| FIG | FIGURE |
| FL | FLOW LINE |
| FNBT | FACING NORTHBOUND TRAFFIC |
| FOC | FACE OF CONCRETE |
| FR RD | FRONTAGE ROAD |
| FS | FAR SIDE, FINISHED SURFACE |
| FSBT | FACING SOUTHBOUND TRAFFIC |
| FT | FOOT, FEET |
| FTG | FOOTING |
| FWBT | FACING WESTBOUND TRAFFIC |
| FWY | FREEWAY |
| FPLM | FULL SPAN PRECAST LAUNCHING METHOD |

## G

| | |
|---|---|
| G | ACCELERATION DUE TO GRAVITY |
| GA | GAGE |
| GALV | GALVANIZED |
| GP | GRADING PLANE |
| GR | GUARD RAILING |
| GSP | GALVANIZED STEEL PIPE |
| GTR | GUTTER |

## H

| | |
|---|---|
| H | HEIGHT |
| HR | HOUR |
| HD | HORIZONTAL DRAIN |
| HDWL | HEADWALL |
| HEX HD | HEXAGONAL HEAD |
| HMA | HOT MIXED ASPHALT |
| HORIZ | HORIZONTAL |
| HP | HINGE POINT, HORSEPOWER |
| HPS | HIGH PERFORMANCE STEEL |
| HS | HIGH STRENGTH |
| HST | HIGH SPEED TRAIN |
| HSR | HIGH SPEED RAIL |
| HW | HEADWALL, HIGH WATER |
| HWM | HIGH WATER MARK |
| HWY | HIGHWAY |

## I

| | |
|---|---|
| IB | IMPORTED BORROW |
| ID | INSIDE DIAMETER |
| IF | INSIDE FACE |
| IN | INCH, INCHES |
| INT | INTERIOR |
| INV | INVERT |
| IRR | IRRIGATION |

## J

| | |
|---|---|
| JCT | JUNCTION |
| JP | JOINT POLE |
| JPCP | JOINTED PLAIN CONCRETE PAVEMENT |
| JS | JUNCTION STRUCTURE |
| JT | JOINT |

## K

| | |
|---|---|
| K | DISTANCE TO ACHIEVE 1% GRADE CHANGE |

## L

| | |
|---|---|
| L | LENGTH |
| LAT | LATITUDE |
| LCB | LEAN CONCRETE BASE |
| LN | LANE |
| LOC | LOCATION |
| LOL | LAYOUT LINE |
| LONG | LONGITUDE |
| LONGIT | LONGITUDINAL |
| LS | LENGTH OF SPIRAL |
| LC | LENGTH OF CURVE |
| LT | LEFT |

## M

| | |
|---|---|
| MAINT | MAINTENANCE |
| MAX | MAXIMUM |
| MB | METAL BEAM |
| MBB | METAL BEAM BARRIER |
| MBGR | METAL BEAM GUARD RAILING |
| MED | MEDIAN |
| M-F | MERCED TO FRESNO |
| MH | MANHOLE |
| MIN | MINIMUM |
| MISC | MISCELLANEOUS |
| MISC I & S | MISCELLANEOUS IRON AND STEEL |
| MKR | MARKER |
| M/L | MAIN LINE (RAILWAY) |

## M CONTINUED

| | |
|---|---|
| MOD | MODIFIED, MODIFY |
| MON | MONUMENT |
| MP | METAL PLATE |
| MPGR | METAL PLATE GUARD RAILING |
| MPH | MILES PER HOUR |
| MR | MOVEMENT RATING |
| MSE | MECHANICALLY STABILIZED EARTH |
| MTL | MATERIAL |
| MSS | MOVING SCAFFOLDING SYSTEM |

## N

| | |
|---|---|
| N | NORTH, NORTHING |
| NB | NORTHBOUND |
| NO. | NUMBER (MUST HAVE PERIOD) |
| NOS. | NUMBERS (MUST HAVE PERIOD) |
| NPS | NOMINAL PIPE SIZE |
| NS | NEAR SIDE |
| NTS | NOT TO SCALE |
| N/A | NOT APPLICABLE |

## O

| | |
|---|---|
| OBLR | OBLITERATE |
| OC | OVERCROSSING |
| OCS | OVERHEAD CONTACT SYSTEM |
| OD | OUTSIDE DIAMETER |
| OF | OUTSIDE FACE |
| OG | ORIGINAL GROUND |
| OGAC | OPEN GRADED ASPHALT CONCRETE |
| OH | OVERHEAD |
| O-O | OUT TO OUT |
| OPP | OPPOSITE |

## P

| | |
|---|---|
| P | PAGE |
| PAP | PERFORATED ALUMINUM PIPE |
| PB | PULL BOX |
| PC | POINT OF CURVATURE, PRECAST |
| PCC | POINT OF COMPOUND CURVE, PORTLAND CEMENT CONCRETE |
| PCP | PERFORATED CONCRETE PIPE, PRESTRESSED CONCRETE PIPE |
| PCVC | POINT OF COMPOUND VERTICAL CURVE |
| PED | PEDESTRIAN |
| PED OC | PEDESTRIAN OVERCROSSING |
| PED UC | PEDESTRIAN UNDERCROSSING |
| PERM MTL | PERMEABLE MATERIAL |
| PG | PROFILE GRADE |
| PI | POINT OF INTERSECTION |
| PJP | PARTIAL JOINT PENETRATION |
| ℙ,PL | PLATE |
| P/L | PROPERTY LINE |
| PM | POST MILE, TIME FROM NOON TO MIDNIGHT |
| PN | PAVING NOTCH |
| POB | POINT OF BEGINNING |
| POC | POINT OF HORIZONTAL CURVE |
| POE | POINT OF ENDING |
| POT | POINT OF TANGENT |
| POVC | POINT OF VERTICAL CURVE |
| PP | PIPE PILE, PLASTIC PIPE, POWER POLE |
| PPL | PREFORMED PERMEABLE LINER |
| PPP | PERFORATED PLASTIC PIPE |
| PRC | POINT OF REVERSE CURVE |

04/02/2014 - RFP No.: HSR 13-57

| REV | DATE | BY | CHK | APP | DESCRIPTION |
|---|---|---|---|---|---|
| | | | | | |

DESIGNED BY K. SEYMOUR
DRAWN BY P. TONKIN
CHECKED BY D. HUNT
IN CHARGE R. COFFIN
DATE 02/04/14

**RECORD SET 15% DESIGN SUBMISSION - NOT FOR CONSTRUCTION**

URS | HMM | ARUP
CALIFORNIA HIGH-SPEED TRAIN

CALIFORNIA
HIGH-SPEED RAIL AUTHORITY

# CALIFORNIA HIGH-SPEED TRAIN PROJECT
# FRESNO TO BAKERSFIELD
GENERAL
ABBREVIATIONS AND LEGENDS
SHEET 1 OF 2

CONTRACT NO. HSR 06-0003
DRAWING NO. CB0010
SCALE NO SCALE
SHEET NO. 5 OF 6

Paul.Tonkin 1/27/2014 6:27:59 PM c:\pwworking\hmm\external\paul.tonkin01-arup.com\d0180522\VFB-CB-0010.dgn

## P CONTINUED

| | |
|---|---|
| **PRF** | PAVEMENT REINFORCING FABRIC |
| **PRVC** | POINT OF REVERSE VERTICAL CURVE |
| **PS&E** | PLANS, SPECIFICATIONS AND ESTIMATES |
| **PS, P/S** | PRESTRESSED, PARALLEL STATION |
| **PSP** | PERFORATED STEEL PIPE |
| **PT** | POINT OF TANGENCY |
| **PVC** | POLYVINYL CHLORIDE |
| **PVI** | POINT OF VERTICAL INTERSECTION |
| **PVMT** | PAVEMENT |
| **PVP** | MAINTENANCE VEHICLE PULLOUT |

## Q

| | |
|---|---|
| **QTY** | QUANTITY |

## R

| | |
|---|---|
| **R** | RADIUS |
| **R & D** | REMOVE AND DISPOSE |
| **R & S** | REMOVE AND SALVAGE |
| **R/C** | RATE OF CHANGE |
| **RCA** | REINFORCED CONCRETE ARCH |
| **RCB** | REINFORCED CONCRETE BOX |
| **RCP** | REINFORCED CONCRETE PIPE |
| **RCPA** | REINFORCED CONCRETE PIPE ARCH |
| **RD** | ROAD |
| **REINF** | REINFORCED, REINFORCEMENT, REINFORCING |
| **REL** | RELOCATE |
| **REPL** | REPLACEMENT |
| **RET** | RETAINING |
| **REV** | REVISED |
| **RDWY** | ROADWAY |
| **RM** | ROAD-MIXED |
| **RP** | RADIUS POINT, REFERENCE POINT |
| **RR** | RAILROAD |
| **RSP** | ROCK SLOPE PROTECTION |
| **RT** | RIGHT |
| **RTE** | ROUTE |
| **RW** | REDWOOD, RETAINING WALL |
| **R/W, ROW** | RIGHT OF WAY |
| **RWY** | RAILWAY |

## S

| | |
|---|---|
| **S** | SOUTH, SUPPLEMENT |
| **SAE** | STRUCTURE APPROACH EMBANKMENT |
| **SALV** | SALVAGE |
| **SAPP** | STRUCTURAL ALUMINUM PLATE PIPE |
| **SB** | SOUTHBOUND |
| **SC** | SPIRAL TO CURVE |
| **SCSP** | SLOTTED CORRUGATED STEEL PIPE |
| **SD** | STORM DRAIN |
| **SEC** | SECOND |
| **SECT** | SECTION |
| **SEP** | SEPARATION |
| **SG** | SUBGRADE |
| **SHLD** | SHOULDER |
| **SHT** | SHEET |
| **SIM** | SIMILAR |
| **S** | STATION LINE |
| **SM** | SELECTED MATERIAL |
| **SPEC** | SPECIAL, SPECIFICATIONS |
| **SPP** | SLOTTED PLASTIC PIPE |
| **SS** | SLOPE STAKE, SPIRAL TO SPIRAL |

## S CONTINUED

| | |
|---|---|
| **SSBM** | STRAP AND SADDLE BRACKET METHOD |
| **SSD** | STRUCTURAL SECTION DRAIN |
| **SSPA** | STRUCTURAL STEEL PLATE ARCH |
| **SSPP** | STRUCTURAL STEEL PLATE PIPE |
| **SSPPA** | STRUCTURAL STEEL PLATE PIPE ARCH |
| **SSRP** | STEEL SPIRAL RIB PIPE |
| **SR** | STATE ROUTE |
| **ST** | STREET, SPIRAL TO TANGENT |
| **STA** | STATION |
| **STBB** | SINGLE THRIE BEAM BARRIER |
| **STD** | STANDARD |
| **STR** | STRUCTURE |
| **SRS** | STAND ALONE RADIO SITE |
| **SURF** | SURFACING |
| **SW** | SIDEWALK, SOUND WALL |
| **SWR** | SEWER |
| **SWS** | SWITCHING STATION |
| **SYM** | SYMMETRICAL |
| **S4S** | SURFACE 4 SIDES |
| **SJVR** | SAN JOAQUIN VALLEY RAILROAD |

## T

| | |
|---|---|
| **T** | SEMI-TANGENT |
| **TAB** | TABLET |
| **TAN** | TANGENT |
| **TBB** | THRIE BEAM BARRIER |
| **TBR** | TIMBER |
| **TC** | TOP OF CURB, TANGENT TO CURVE |
| **TCB** | TRAFFIC CONTROL BOX |
| **TEL** | TELEPHONE |
| **TEMP** | TEMPORARY |
| **TG** | TOP OF GRADE |
| **TOT** | TOTAL |
| **TM** | TECHNICAL MEMORANDUM |
| **TP** | TELEPHONE POLE |
| **TPB** | TREATED PERMEABLE BASE |
| **TPM** | TREATED PERMEABLE MATERIAL |
| **TPSS** | TRACTION POWER SUPPLY STATION |
| **TRANS** | TRANSITION, TRANSVERSE |
| **TS** | TRAFFIC SIGNAL, TUBULAR STEEL, TANGET TO SPIRAL |
| **TYP** | TYPICAL |
| **TOR** | TOP OF RAIL |

## U

| | |
|---|---|
| **UC** | UNDERCROSSING |
| **UD** | UNDERDRAIN |
| **UON** | UNLESS OTHERWISE NOTED |
| **UP** | UNDERPASS |
| **UPRR** | UNION PACIFIC RAILROAD |
| **USFWS** | UNITED STATES FISH AND WILDLIFE SERVICE |

## V

| | |
|---|---|
| **V** | VALVE, DESIGN SPEED |
| **VAR** | VARIABLE |
| **VC** | VERTICAL CURVE |
| **VCP** | VITRIFIED CLAY PIPE |
| **VERT** | VERTICAL |
| **VIA** | VIADUCT |
| **VOL** | VOLUME |

## W

| | |
|---|---|
| **W** | WEST, WIDTH |
| **WB** | WESTBOUND |
| **WH** | WEEP HOLE |
| **WM** | WIRE MESH |
| **WS** | WATER SURFACE |
| **WSP** | WELDED STEEL PIPE |
| **WT** | WEIGHT |
| **WV** | WATER VALVE |
| **WW** | WINGWALL |
| **WWLOL** | WINGWALL LAYOUT LINE |
| **W/** | WITH |

## X

| | |
|---|---|
| **X SEC** | CROSS SECTION |
| **XING** | CROSSING |

## Y

| | |
|---|---|
| **YR** | YEAR |
| **YRS** | YEARS |

## LEGEND

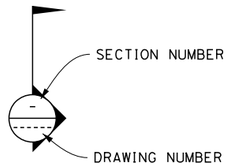


PROPOSED ELECTRICITY LINE

EXISTING ELECTRICITY LINE

EXISTING OVERHEAD ELECTRICITY LINE

PROPOSED OVERHEAD ELECTRICTY LINE

PROPOSED HST RIGHT OF WAY

PROPOSED HST TRACK CENTERLINE

RETAINING WALL

TOE OF SLOPE / TOP OF CUT

PROPOSED TEMPORARY CONSTRUCTION EASEMENT

**CONTROL LINE EXAMPLE "A" LINE**

255+00 260+00 265+00

OR

TRACK (PLAN AND ELEVATION)

REL

TRACK TO BE REMOVED AND RELOCATED PER BNSF

REMOVE BASE & SURFACING

SOUND BARRIER (POTENTIAL)

DIRECTION OF FLOW

WATER SURFACE

## GENERAL NOTES

1. TRACK PROFILE IS DESIGNED AS TOP OF THE LOW RAIL. VERTICAL CLEARANCE REQUIREMENTS ARE MEASURED FROM THE TOP OF THE HIGH RAIL ON SUPERELEVATED TRACK. THE CLEARANCE ENVELOPES SHOWN DEMONSTRATE THE MINIMUM CLEARANCE REQUIREMENTS.

2. MINIMUM VERTICAL CLEARANCE REQUIREMENTS TO CANALS AND DITCHES ARE NOT KNOWN. FURTHER CONSULTATION WITH THE WATERCOURSE OWNERS WILL BE REQUIRED TO DETERMINE NECESSARY CLEARANCES.

3. THE FOLLOWING ARE ROADWAY DESIGN STANDARDS AND GUIDELINES:
   A. CALTRANS HIGHWAY DESIGN MANUAL (2012)
   B. AASHTO A POLICY ON GEOMETRIC DESIGN OF HIGHWAYS AND STREETS (2011)
   C. AASHTO ROADSIDE DESIGN GUIDE (2011)
   D. APPLICABLE LOCAL DESIGN STANDARD AND GUIDELINES (I.E., CITY OF FRESNO)

4. THE FEMA FLOODPLAIN BOUNDARIES ARE CALLED OUT AS "LIMIT OF 100YR FEMA FLOODPLAIN". THE LIMITS OF THE MODELED 100 YEAR WATER SURFACE ELEVATIONS (WSE) ARE APPROXIMATE AND ARE MARKED WITH THE NAME OF THE WATERBODY ASSOCIATED WITH THE MODELED FLOODING, E.G. "LIMIT OF POSO CREEK FLOODPLAIN".

5. THE STRUCTURE DESIGN ASSUMES THAT THE DEPTH FROM TOR TO TOP OF DECK IS 2'-6" THROUGHOUT. HOWEVER, WHERE BALLASTED TRACK FORM IS USED, THE HEIGHT FROM TOR TO DECK SHALL BE 2'-9" PLUS AN ALLOWANCE FOR WATERPROOF MEMBRANE, AND PROTECTION LAYER IF REQUIRED. FOR SLAB TRACKFORM, THE HEIGHT FROM TOR TO DECK SHALL BE 2'-6" PLUS AN ALLOWANCE FOR WATERPROOF MEMBRANE AND PROTECTION LAYER IF REQUIRED.

6. WHERE THE VERTICAL ALIGNMENT GRADE IS LESS THAN 0.5% THE UPPER SURFACE OF THE VIADUCT STRUCTURE SHALL BE PROFILED TO GIVE A MINIMUM LONGITUDINAL FALL OF 0.5%. TYPICALLY FOR A SPAN OF 120'-00" ON A 0% GRADE SECTION OF VIADUCT THIS COULD BE ACHIEVED BY MODIFYING THE CROSS SLOPE OF THE GIRDER LINEARLY BETWEEN 0.8% AT MID-SPAN TO 2% AT EACH END.

7. WHEN LATERAL SEPARATION BETWEEN THE CONVENTIONAL RAILROAD AND HST SYSTEM IS LESS THAN 102', A SITE SPECIFIC HAZARD ANALYSIS WILL BE CONDUCTED TO DETERMINE WHAT SPECIFIC COLLISION PROTECTION MEASURES MAY NEED TO BE IMPLEMENTED.

8. RIP-RAP PROTECTION IS REQUIRED FOR EMBANKMENTS WITHIN FEMA SPECIAL FLOOD HAZARD ZONES, IN ACCORDANCE WITH DESIGN CRITERIA.

9. HST ALIGNMENT CONTROL LINE IS DESIGNED AS THE CENTERLINE BETWEEN THE TWO MAINLINE TRACKS.

10. TRACK FORM USED IN TYPICAL SECTIONS IS INDICATIVE.

DIRECTION OF TRAFFIC

POINT OF MINIMUM VERTICAL CLEARANCE
ROAD CLOSURE (ROADWAYS)

1 LINE DATA

1 3 CURVE DATA (ALIGNMENTS)
CURVE DATA (STRUCTURES)

EXISTING HIGH VOLTAGE TOWER FOOTPRINT

OG / ORIGINAL GROUND

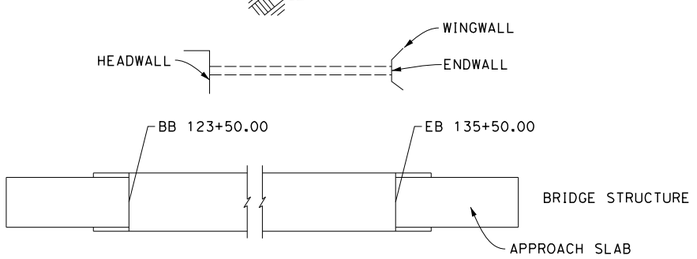


**04/02/2014 - RFP No.: HSR 13-57**

| REV | DATE | BY | CHK | APP | DESCRIPTION |
|---|---|---|---|---|---|

DESIGNED BY K. SEYMOUR
DRAWN BY P. TONKIN
CHECKED BY D. HUNT
IN CHARGE R. COFFIN
DATE 02/04/14

**RECORD SET 15% DESIGN SUBMISSION - NOT FOR CONSTRUCTION**

URS | HMM | ARUP
CALIFORNIA HIGH-SPEED TRAIN

CALIFORNIA HIGH-SPEED RAIL AUTHORITY

# CALIFORNIA HIGH-SPEED TRAIN PROJECT FRESNO TO BAKERSFIELD

GENERAL
ABBREVIATIONS AND LEGENDS
SHEET 2 OF 2

CONTRACT NO. HSR 06-0003
DRAWING NO. CB0011
SCALE NO SCALE
SHEET NO. 6 OF 6

Paul.Tonkin 1/27/2014 6:37:21 PM c:\pwworking\hmm\external\paul.tonkin01-arup.com\d0180522\FB-CB-0011.dgn

## STREET CLOSURE

| STREET NAME | HST ALIGNMENT STA | LOCAL STANDARD |
|---|---|---|
| E CLAYTON AVE | 660+10.00 | FRESNO COUNTY |
| E SPRINGFIELD AVE | 818+49.00 | FRESNO COUNTY |
| E TOPEKA AVE | 952+25.00 | FRESNO COUNTY |

BNSF
SUBSECTION F1
S MAPLE AVE
E LINCOLN AVE
CT1101
650+00
E CLAYTON AVE
S MAPLE AVE
E ADAMS AVE
S CEDAR AVE
S CEDAR AVE
CT1103
700+00
S MAPLE AVE
E SOUTH AVE
S CEDAR AVE
CT1104
750+00
S MAPLE AVE
CT1107
S CHESTNUT AVE
E MANNING AVE
800+00
CT1106
SR 41
BOWLES
"M" LINE
850+00
CT1110
E FLORAL AVE
E SPRINGFIELD AVE
S CEDAR AVE
CT1109
900+00
CT1112
MONMOUTH
S CHESTNUT AVE
CT1114
E TOPEKA AVE
950+00
CT1115
CT1111
E MOUNTAIN VIEW AVE
1000+00
E NEBRASKA AVE
CT1113
CT1116
1050+00
S CHESTNUT AVE
SUBSECTION H, HW, & HW2
E CONEJO AVE
BNSF
SR 43
S FOWLER AVE
S CLOVIS AVE

2000 0 2000 4000
1"-2000'

| REV | DATE | BY | CHK | APP | DESCRIPTION |
|---|---|---|---|---|---|

DESIGNED BY A. CANNON
DRAWN BY E. SUDHAUSEN
CHECKED BY S. BROWN
IN CHARGE R. COFFIN
DATE 12/31/13

**RECORD SET 15% DESIGN SUBMISSION - NOT FOR CONSTRUCTION**

URS | HMM | ARUP
CALIFORNIA HIGH-SPEED TRAIN

CALIFORNIA
HIGH-SPEED RAIL AUTHORITY

# CALIFORNIA HIGH-SPEED TRAIN PROJECT
# FRESNO TO BAKERSFIELD
MONMOUTH SUBSECTION
ALIGNMENT M
ROADWAY / GRADE SEPARATION
KEY MAP

CONTRACT NO. HSR 06-0003
DRAWING NO. CB0050
SCALE AS SHOWN
SHEET NO. 1 OF 32

04/02/2014 - RFP No.: HSR 13-57

eron.sudhausen 12/27/2013 10:29:46 AM c:\pwworking\hmm\external\eron.sudhausen-arup.com\d0125352\VFB-CB-0050-M.dgn

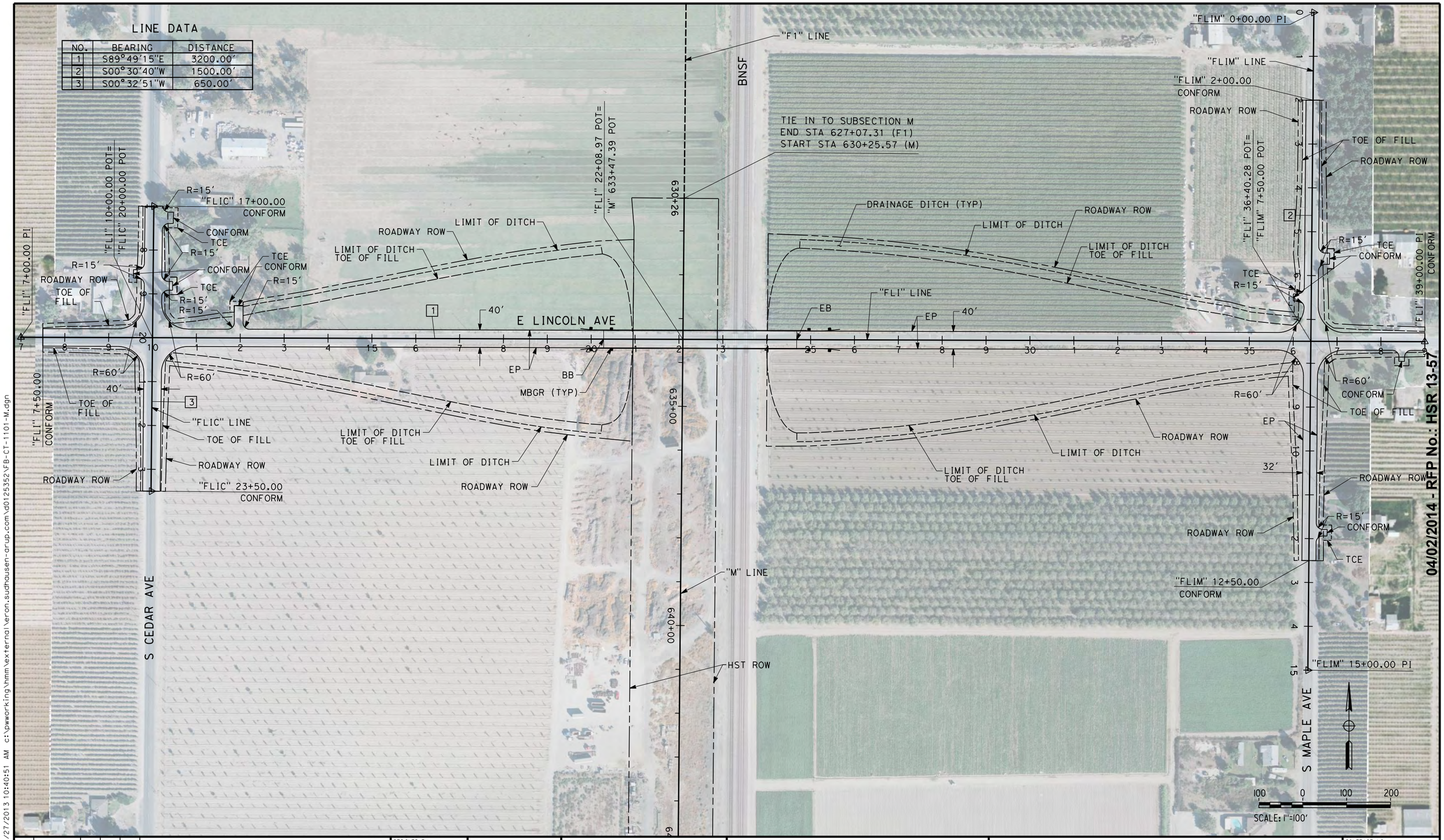


| REV | DATE | BY | CHK | APP | DESCRIPTION |
|---|---|---|---|---|---|

DESIGNED BY: A. CANNON
DRAWN BY: E. SUDHAUSEN
CHECKED BY: S. BROWN
IN CHARGE: R. COFFIN
DATE: 12/31/13

**RECORD SET 15% DESIGN SUBMISSION - NOT FOR CONSTRUCTION**

URS | HMM | ARUP
CALIFORNIA HIGH-SPEED TRAIN

CALIFORNIA HIGH-SPEED RAIL AUTHORITY

# CALIFORNIA HIGH-SPEED TRAIN PROJECT
# FRESNO TO BAKERSFIELD
MONMOUTH SUBSECTION
ALIGNMENT M
GRADE SEPARATION LAYOUT
E LINCOLN AVE

CONTRACT NO. HSR 06-0003
DRAWING NO. CT1101
SCALE AS SHOWN
SHEET NO. 2 OF 32

04/02/2014 - RFP No.: HSR 13-57

eron.sudhausen 12/27/2013 10:40:51 AM c:\pwworking\hmm\external\eron.sudhausen-arup.com\d0125352\FB-CT-1101-M.dgn

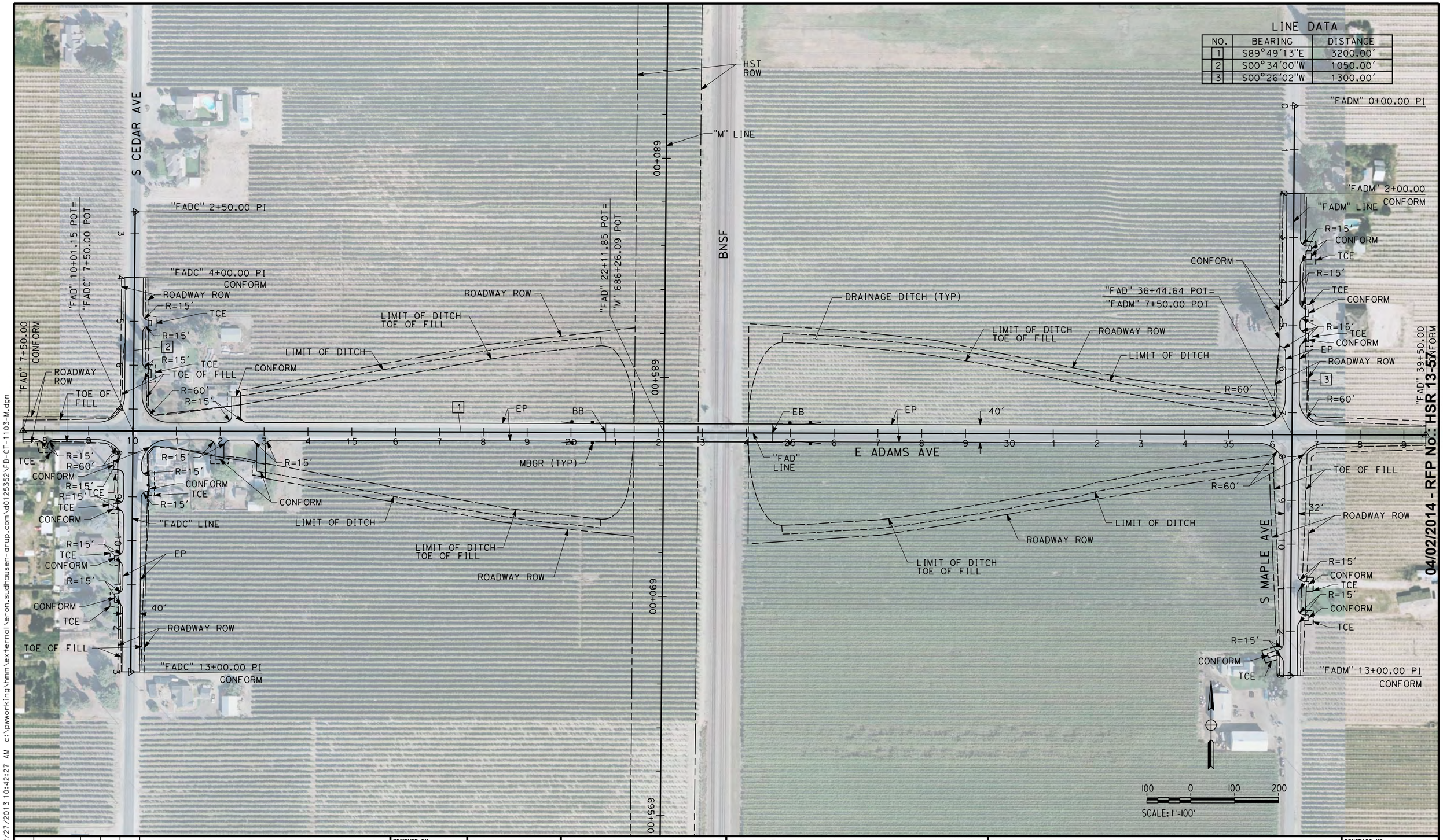


| REV | DATE | BY | CHK | APP | DESCRIPTION |
|---|---|---|---|---|---|
| | | | | | |

DESIGNED BY: A. CANNON
DRAWN BY: E. SUDHAUSEN
CHECKED BY: S. BROWN
IN CHARGE: R. COFFIN
DATE: 12/31/13

**RECORD SET 15% DESIGN SUBMISSION - NOT FOR CONSTRUCTION**

URS | HMM | ARUP
CALIFORNIA HIGH-SPEED TRAIN

CALIFORNIA HIGH-SPEED RAIL AUTHORITY

# CALIFORNIA HIGH-SPEED TRAIN PROJECT
# FRESNO TO BAKERSFIELD
MONMOUTH SUBSECTION
ALIGNMENT M
GRADE SEPARATION LAYOUT
E ADAMS AVE

CONTRACT NO. HSR 06-0003
DRAWING NO. CT1103
SCALE AS SHOWN
SHEET NO. 3 OF 32

04/02/2014 - RFP No.: HSR 13-50

eron.sudhausen 12/27/2013 10:42:27 AM c:\pwworking\hmm\external\eron.sudhausen-arup.com\d0125352\FB-CT-1103-M.dgn

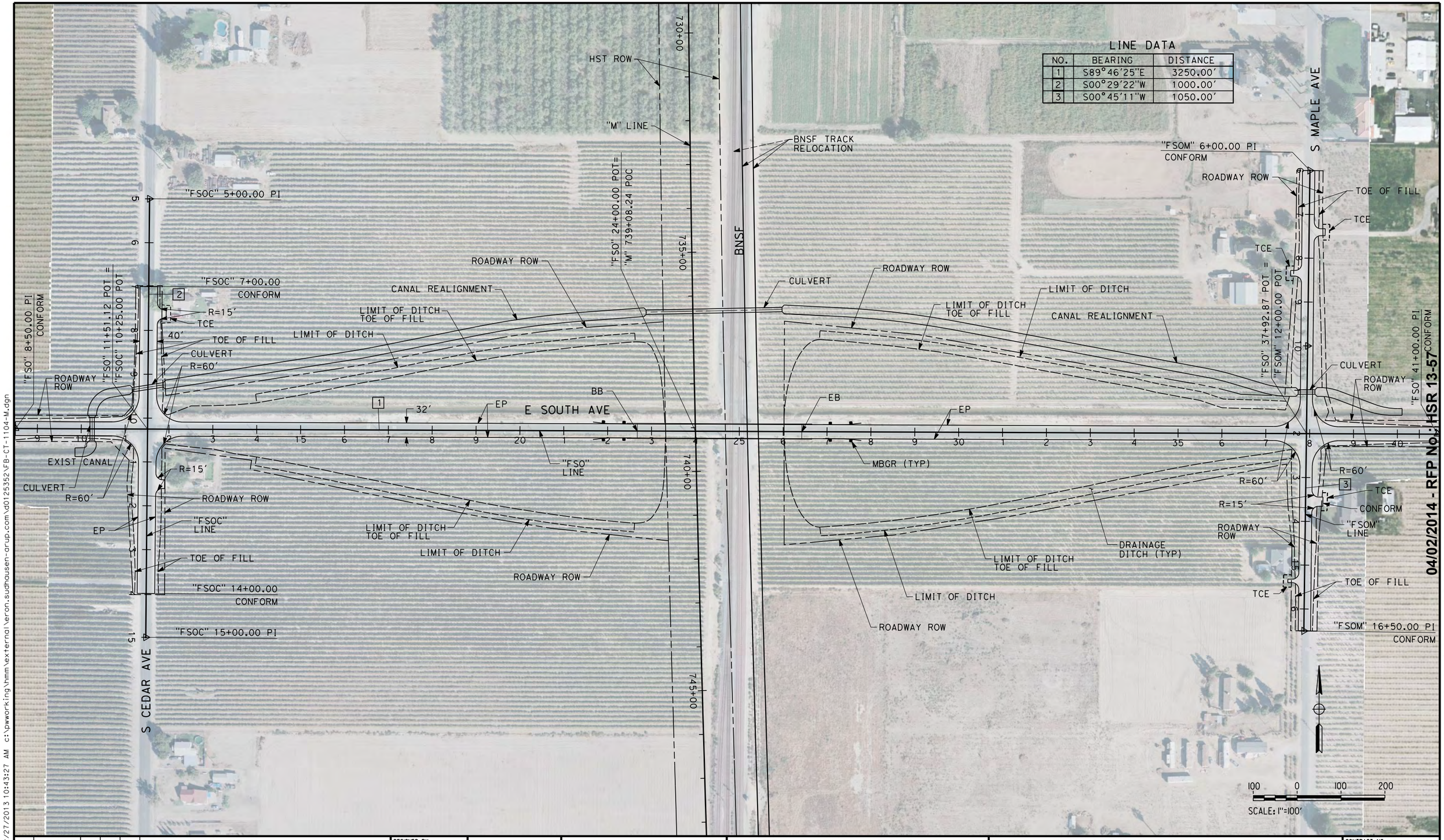


04/02/2014 - RFP No.: HSR 13-57

12/27/2013 10:43:27 AM c:\pwworking\hmm\external\eron.sudhausen-arup.com\d0125352\FB-CT-1104-M.dgn

eron.sudhausen

| REV | DATE | BY | CHK | APP | DESCRIPTION |
|---|---|---|---|---|---|

DESIGNED BY A. CANNON
DRAWN BY E. SUDHAUSEN
CHECKED BY S. BROWN
IN CHARGE R. COFFIN
DATE 12/31/13

**RECORD SET 15% DESIGN SUBMISSION - NOT FOR CONSTRUCTION**

URS | HMM | ARUP
CALIFORNIA HIGH-SPEED TRAIN

CALIFORNIA
HIGH-SPEED RAIL AUTHORITY

# CALIFORNIA HIGH-SPEED TRAIN PROJECT
# FRESNO TO BAKERSFIELD

MONMOUTH SUBSECTION
ALIGNMENT M
GRADE SEPARATION LAYOUT
E SOUTH AVE

CONTRACT NO. HSR 06-0003
DRAWING NO. CT1104
SCALE AS SHOWN
SHEET NO. 4 OF 32

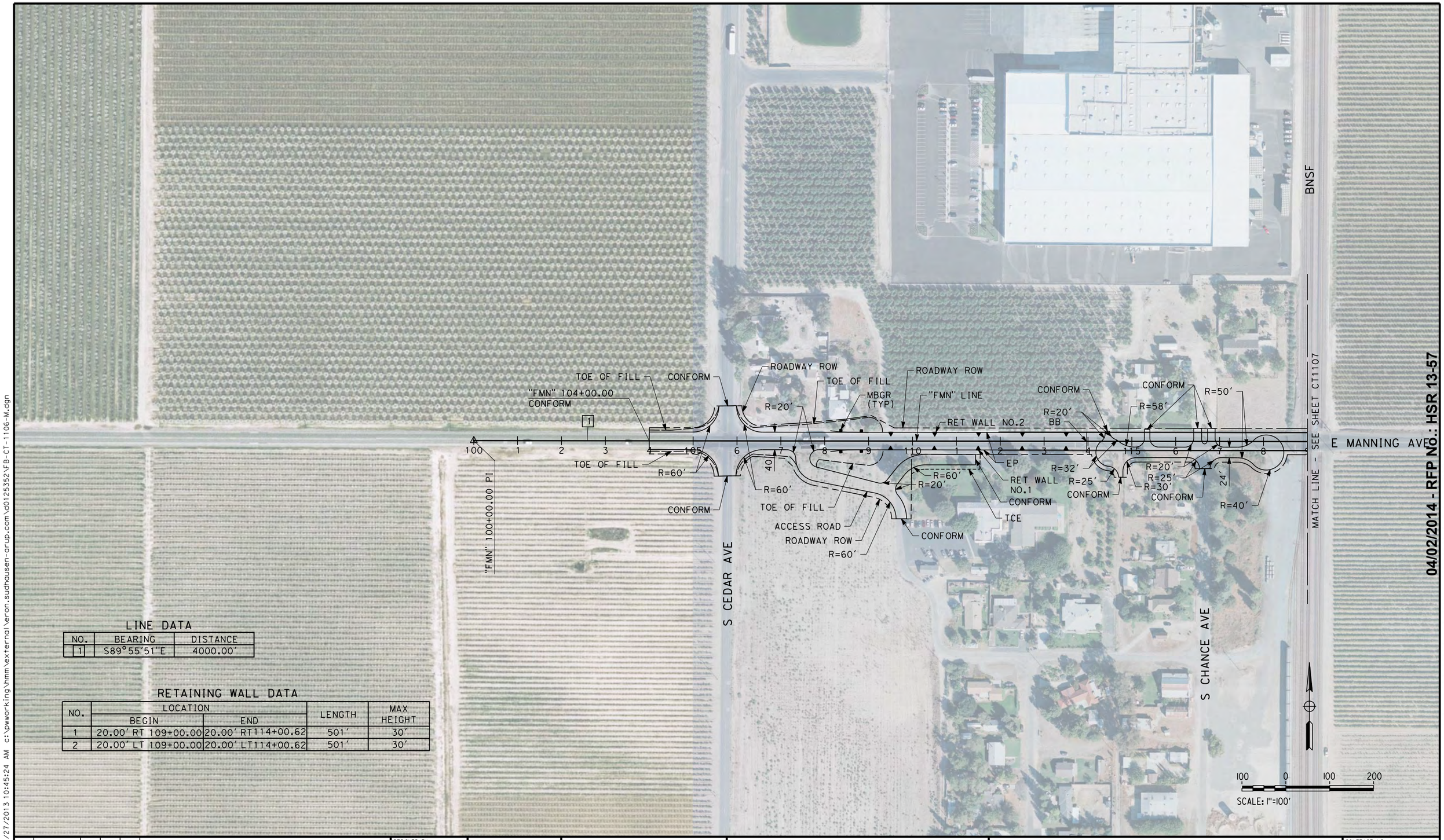


LINE DATA

| NO. | BEARING | DISTANCE |
|---|---|---|
| 1 | S89°55'51"E | 4000.00' |

RETAINING WALL DATA

| NO. | LOCATION | | LENGTH | MAX HEIGHT |
|---|---|---|---|---|
| | BEGIN | END | | |
| 1 | 20.00' RT 109+00.00 | 20.00' RT114+00.62 | 501' | 30' |
| 2 | 20.00' LT 109+00.00 | 20.00' LT114+00.62 | 501' | 30' |

04/02/2014 - RFP NO.: HSR 13-57

| REV | DATE | BY | CHK | APP | DESCRIPTION |
|---|---|---|---|---|---|

DESIGNED BY A. CANNON
DRAWN BY E. SUDHAUSEN
CHECKED BY S. BROWN
IN CHARGE R. COFFIN
DATE 12/31/13

**RECORD SET 15% DESIGN SUBMISSION - NOT FOR CONSTRUCTION**

URS | HMM | ARUP
CALIFORNIA HIGH-SPEED TRAIN

CALIFORNIA
HIGH-SPEED RAIL AUTHORITY

# CALIFORNIA HIGH-SPEED TRAIN PROJECT
# FRESNO TO BAKERSFIELD
MONMOUTH SUBSECTION
ALIGNMENT M
GRADE SEPARATION LAYOUT
E MANNING AVE

CONTRACT NO. HSR 06-0003
DRAWING NO. CT1106
SCALE AS SHOWN
SHEET NO. 5 OF 32

eron.sudhausen 12/27/2013 10:45:24 AM c:\pwworking\hmm\external\eron.sudhausen-arup.com\d0125352\FB-CT-1106-M.dgn

LINE DATA

| NO. | BEARING | DISTANCE |
|---|---|---|
| 1 | S89°55'51"E | 4000.00' |
| 2 | S00°19'48"W | 1500.00' |

HST ROW
"FMM" 0+00.00 PI
785+00
790+00
795+00
800+00
BNSF TRACK RELOCATION
ROADWAY ROW
LIMIT OF DITCH TOE OF FILL
LIMIT OF DITCH
DRAINAGE DITCH (TYP)
"FMM" 7+49.17 POT= "FMN" 132+17.53 POT
MBGR (TYP)
EB
"FMN" LINE
E MANNING AVE
40'
EP
CONFORM
TCE
ACCESS ROAD
R=60'
R=20'
32'
LIMIT OF DITCH
LIMIT OF DITCH TOE OF FILL
ROADWAY ROW
"FMM" 3+00.00 CONFORM
TCE
CONFORM
R=15'
TOE OF FILL
R=60'
ROADWAY ROW
"FMN" 135+00.00 CONFORM
TOE OF FILL
EP
TOE OF FILL
"FMM" LINE
ROADWAY ROW
"FMN" 140+00.00 PI
S MAPLE AVE
"FMM" 13+00.00 CONFORM
"FMM" 15+00.00 PI
MATCH LINE - SEE CT1106
ROADWAY ROW
BNSF
"FMN" 120+25.94 POT= "M" 791+99.94 POC
"M" LINE
100 0 100 200
SCALE: 1"=100'

04/02/2014 - RFP No.: HSR 13-57

| REV | DATE | BY | CHK | APP | DESCRIPTION |
|---|---|---|---|---|---|

DESIGNED BY A. CANNON
DRAWN BY E. SUDHAUSEN
CHECKED BY S. BROWN
IN CHARGE R. COFFIN
DATE 12/31/13

RECORD SET 15% DESIGN SUBMISSION - NOT FOR CONSTRUCTION

URS | HMM | ARUP
CALIFORNIA HIGH-SPEED TRAIN

CALIFORNIA HIGH-SPEED RAIL AUTHORITY

# CALIFORNIA HIGH-SPEED TRAIN PROJECT
# FRESNO TO BAKERSFIELD
MONMOUTH SUBSECTION
ALIGNMENT M
GRADE SEPARATION LAYOUT
E MANNING AVE

CONTRACT NO. HSR 06-0003
DRAWING NO. CT1107
SCALE AS SHOWN
SHEET NO. 6 OF 32

eron.sudhausen 12/27/2013 10:46:16 AM c:\pwworking\hmm\external\eron.sudhausen-arup.com\d0125352\FB-CT-1107-M.dgn

LINE DATA

| NO. | BEARING | DISTANCE |
|---|---|---|
| 1 | S89°46'40"E | 3900.00' |

INTERLOCKING HOUSE
HST ROW
"M" LINE
895+00
"FFL" 23+00.00 POT= "M" 898+64.57 POT
ROADWAY ROW
HST ROW
LIMIT OF DITCH TOE OF FILL
ACCESS ROAD
LIMIT OF DITCH
"FFL" 3+00.00 IP1
CONFORM
ROADWAY ROW
CONFORM
CONFORM
R=15'
40'
TCE
E FLORAL AVE
MBGR (TYP)
"FFL" LINE
1
BB
R=20'
R=15'
TCE
ROADWAY ROW
DRAINAGE DITCH (TYP)
LIMIT OF DITCH TOE OF FILL
HST ROW
LIMIT OF DITCH
ACCESS ROAD
ROADWAY ROW
INTERLOCKING HOUSE
BNSF
905+00
900+00
HST ROW
TCE
CONFORM
CONFORM
TCE
R=15'
TCE
CONFORM
ROADWAY ROW
ACCESS ROAD
R=15'
LIMIT OF DITCH TOE OF FILL
LIMIT OF DITCH
EB
EP
MATCH LINE - SEE CT1110
LIMIT OF DITCH TOE OF FILL
LIMIT OF DITCH
ROADWAY ROW
100 0 100 200
SCALE: 1"=100'

04/02/2014 - RFP No.: HSR 13-57

12/27/2013 10:48:02 AM c:\pwworking\hmm\external\eron.sudhausen-arup.com\d0125352\FB-CT-1109-M.dgn
eron.sudhausen

| REV | DATE | BY | CHK | APP | DESCRIPTION |
|---|---|---|---|---|---|

DESIGNED BY A. CANNON
DRAWN BY E. SUDHAUSEN
CHECKED BY S. BROWN
IN CHARGE R. COFFIN
DATE 12/31/13

RECORD SET 15% DESIGN SUBMISSION - NOT FOR CONSTRUCTION

URS | HMM | ARUP
CALIFORNIA HIGH-SPEED TRAIN

CALIFORNIA HIGH-SPEED RAIL AUTHORITY

# CALIFORNIA HIGH-SPEED TRAIN PROJECT
# FRESNO TO BAKERSFIELD
MONMOUTH SUBSECTION
ALIGNMENT M
GRADE SEPARATION LAYOUT
E FLORAL AVE

CONTRACT NO. HSR 06-0003
DRAWING NO. CT1109
SCALE AS SHOWN
SHEET NO. 7 OF 32

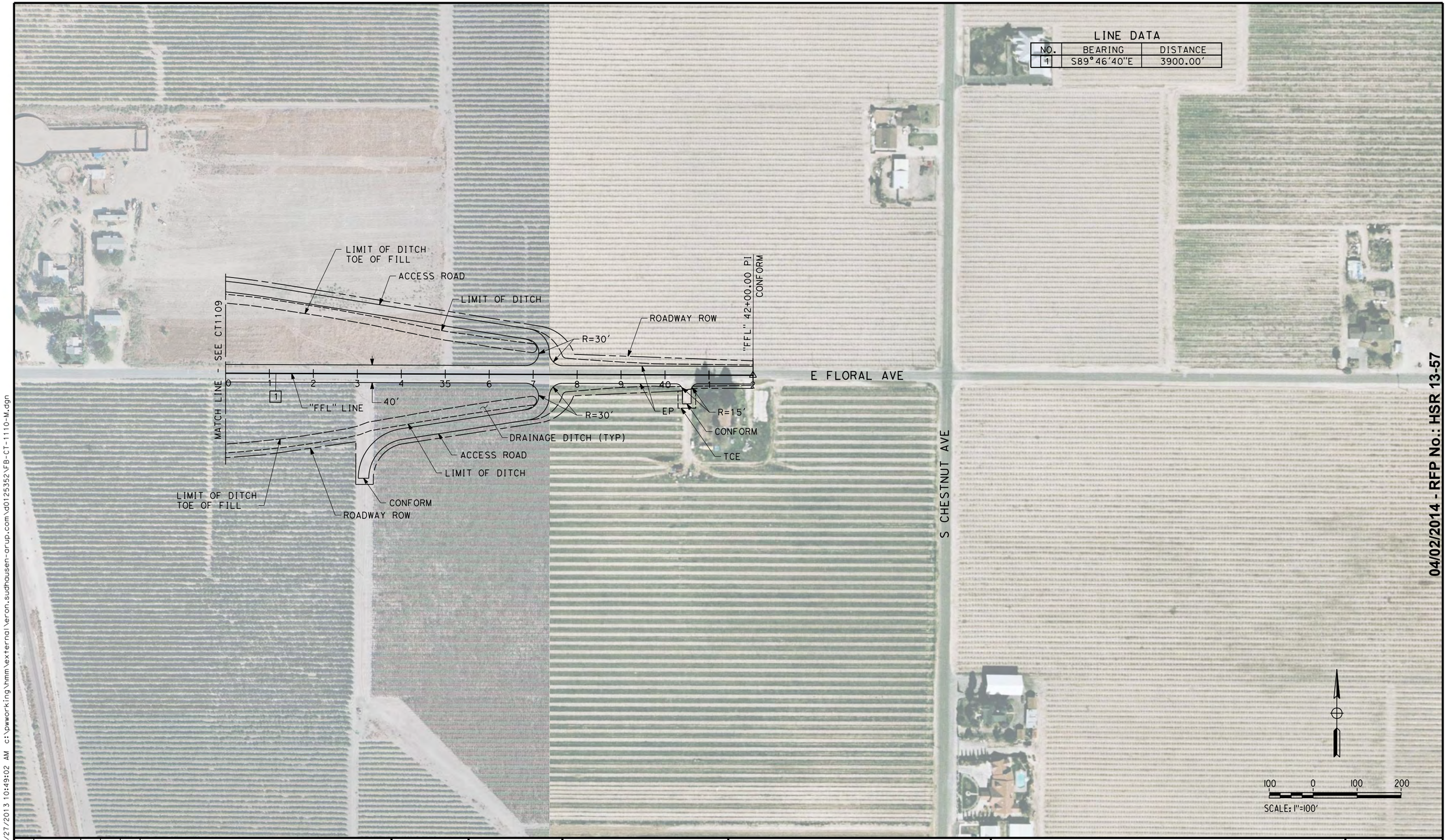


| REV | DATE | BY | CHK | APP | DESCRIPTION |
|---|---|---|---|---|---|
| | | | | | |

DESIGNED BY: A. CANNON
DRAWN BY: E. SUDHAUSEN
CHECKED BY: S. BROWN
IN CHARGE: R. COFFIN
DATE: 12/31/13

**RECORD SET 15% DESIGN SUBMISSION - NOT FOR CONSTRUCTION**

URS | HMM | ARUP
CALIFORNIA HIGH-SPEED TRAIN

CALIFORNIA
HIGH-SPEED RAIL AUTHORITY

# CALIFORNIA HIGH-SPEED TRAIN PROJECT
# FRESNO TO BAKERSFIELD
MONMOUTH SUBSECTION
ALIGNMENT M
GRADE SEPARATION LAYOUT
E FLORAL AVE

CONTRACT NO.: HST 06-0003
DRAWING NO.: CT1110
SCALE: AS SHOWN
SHEET NO.: 8 OF 32

04/02/2014 - RFP No.: HSR 13-57

eron.sudhausen 12/27/2013 10:49:02 AM c:\pwworking\hmm\external\eron.sudhausen-arup.com\d0125352\FB-CT-1110-M.dgn

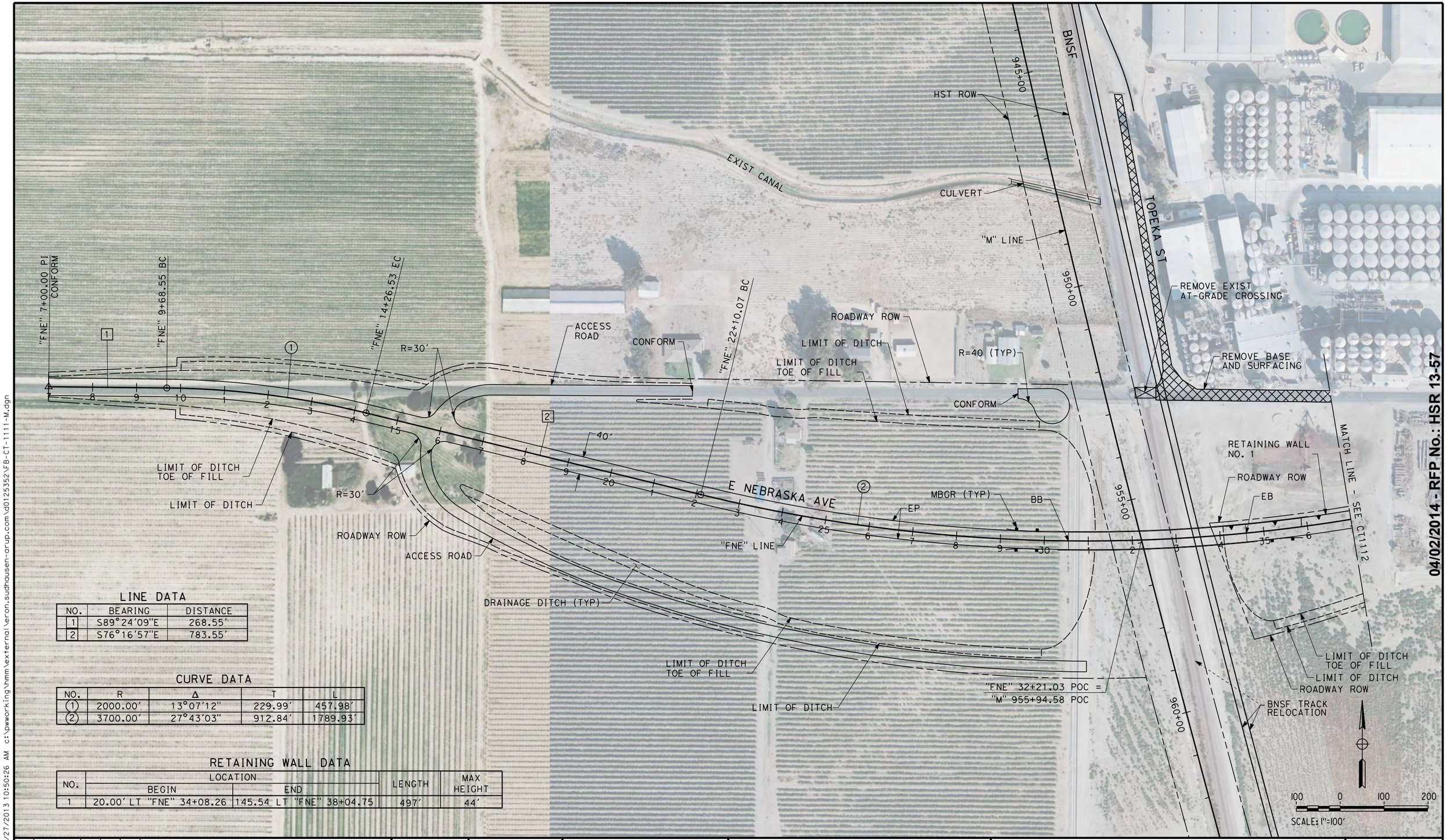


## LINE DATA

| NO. | BEARING | DISTANCE |
|---|---|---|
| 1 | S89°24'09"E | 268.55' |
| 2 | S76°16'57"E | 783.55' |

## CURVE DATA

| NO. | R | Δ | T | L |
|---|---|---|---|---|
| (1) | 2000.00' | 13°07'12" | 229.99' | 457.98' |
| (2) | 3700.00' | 27°43'03" | 912.84' | 1789.93' |

## RETAINING WALL DATA

| NO. | LOCATION | | LENGTH | MAX HEIGHT |
|---|---|---|---|---|
| | BEGIN | END | | |
| 1 | 20.00' LT "FNE" 34+08.26 | 145.54 LT "FNE" 38+04.75 | 497' | 44' |

04/02/2014 - RFP No.: HSR 13-57

| REV | DATE | BY | CHK | APP | DESCRIPTION |
|---|---|---|---|---|---|

DESIGNED BY A. CANNON
DRAWN BY E. SUDHAUSEN
CHECKED BY S. BROWN
IN CHARGE R. COFFIN
DATE 12/31/13

**RECORD SET 15% DESIGN SUBMISSION - NOT FOR CONSTRUCTION**

URS | HMM | ARUP
CALIFORNIA HIGH-SPEED TRAIN

CALIFORNIA
HIGH-SPEED RAIL AUTHORITY

# CALIFORNIA HIGH-SPEED TRAIN PROJECT
# FRESNO TO BAKERSFIELD
MONMOUTH SUBSECTION
ALIGNMENT M
GRADE SEPARATION LAYOUT
E NEBRASKA AVE

CONTRACT NO. HSR 06-0003
DRAWING NO. CT1111
SCALE AS SHOWN
SHEET NO. 9 OF 32

eron.sudhausen 12/27/2013 10:50:26 AM c:\pwworking\hmm\external\eron.sudhausen-arup.com\d0125352\FB-CT-1111-M.dgn

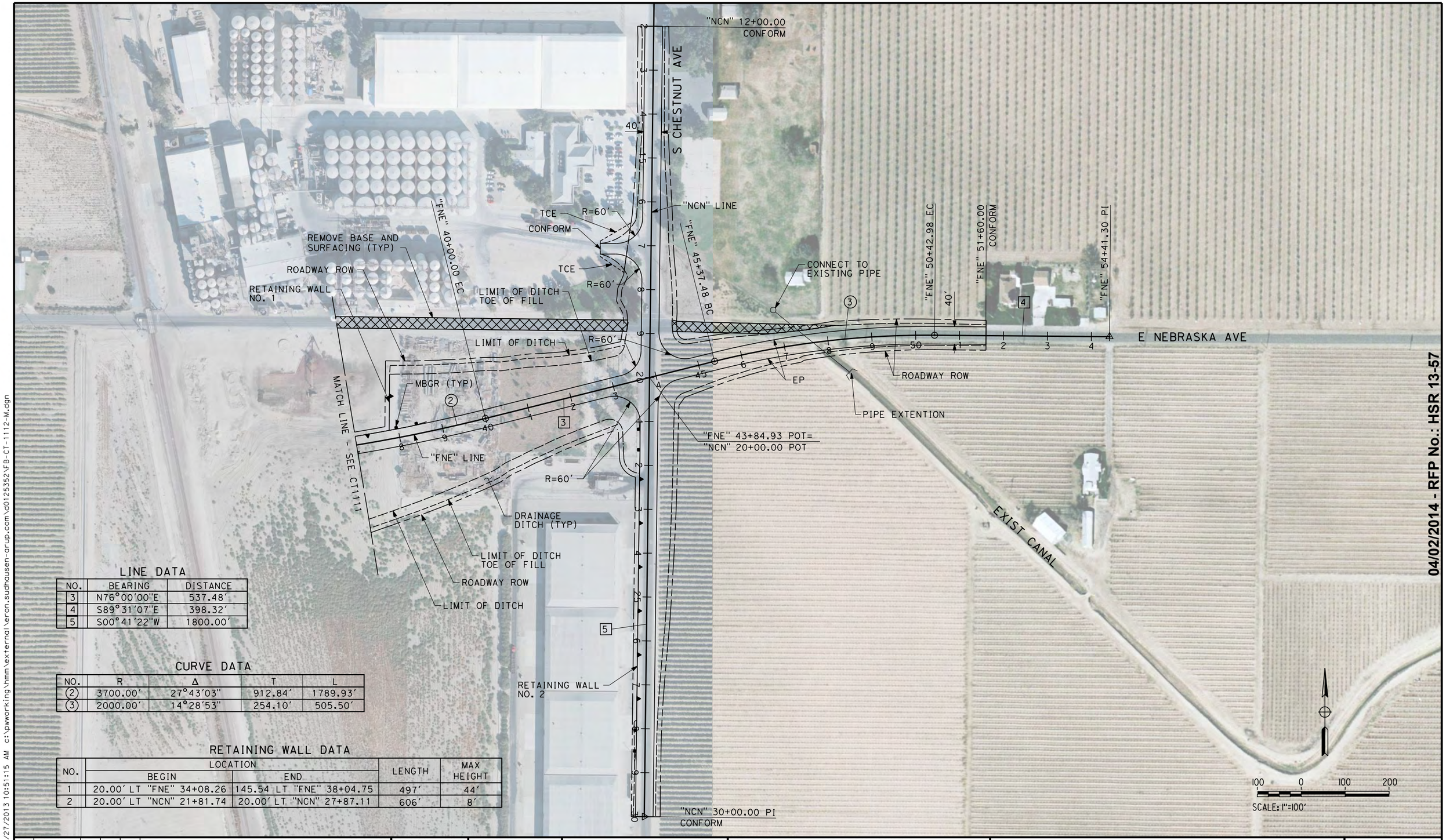


### LINE DATA

| NO. | BEARING | DISTANCE |
|---|---|---|
| 3 | N76°00'00"E | 537.48' |
| 4 | S89°31'07"E | 398.32' |
| 5 | S00°41'22"W | 1800.00' |

### CURVE DATA

| NO. | R | Δ | T | L |
|---|---|---|---|---|
| (2) | 3700.00' | 27°43'03" | 912.84' | 1789.93' |
| (3) | 2000.00' | 14°28'53" | 254.10' | 505.50' |

### RETAINING WALL DATA

| NO. | LOCATION | | LENGTH | MAX HEIGHT |
|---|---|---|---|---|
| | BEGIN | END | | |
| 1 | 20.00' LT "FNE" 34+08.26 | 145.54' LT "FNE" 38+04.75 | 497' | 44' |
| 2 | 20.00' LT "NCN" 21+81.74 | 20.00' LT "NCN" 27+87.11 | 606' | 8' |

| REV | DATE | BY | CHK | APP | DESCRIPTION |
|---|---|---|---|---|---|
| | | | | | |

DESIGNED BY A. CANNON
DRAWN BY E. SUDHAUSEN
CHECKED BY S. BROWN
IN CHARGE R. COFFIN
DATE 12/31/13

**RECORD SET 15% DESIGN SUBMISSION - NOT FOR CONSTRUCTION**

URS | HMM | ARUP
CALIFORNIA HIGH-SPEED TRAIN

CALIFORNIA
HIGH-SPEED RAIL AUTHORITY

# CALIFORNIA HIGH-SPEED TRAIN PROJECT
# FRESNO TO BAKERSFIELD
MONMOUTH SUBSECTION
ALIGNMENT M
GRADE SEPARATION LAYOUT
E NEBRASKA AVE

CONTRACT NO. HST 06-0003
DRAWING NO. CT1112
SCALE AS SHOWN
SHEET NO. 10 OF 32

04/02/2014 - RFP No.: HSR 13-57

eron.sudhausen 12/27/2013 10:51:15 AM c:\pwworking\hmm\external\eron.sudhausen-arup.com\d0125352\FB-CT-1112-M.dgn

## LINE DATA

| NO. | BEARING | DISTANCE |
|---|---|---|
| 1 | S89°32'05"E | 4200.00' |
| 6 | S00°35'56"W | 1600.00' |

MATCH LINE -SEE CT1115

"M" LINE

RADIO SITE (SOUTH OPTION)

ACCESS ROAD

ABANDON EXIST CANAL

BNSF TRACK RELOCATION

CONFORM

HST ROW

ACCESS ROAD

LIMIT OF DITCH TOE OF FILL

ROADWAY ROW

"FMV" 118+34.49 POT = "M" 1007+79.74 POT

ROADWAY ROW

LIMIT OF DITCH TOE OF FILL

LIMIT OF DITCH

LIMIT OF DITCH

DRAINAGE DITCH (TYP)

"FMV" 98+00.00 PI CONFORM

1005+00

R=30'

R=30'

"FMV" 114+81.75 POT = "FCS" 0+00.00 PI

1

EP

40'

BB

E MOUNTAIN VIEW AVE

LINE - SEE CT1114

MATCH LINE

R=60'

MBGR (TYP)

EB

"FMV" LINE

"FCS" LINE

6

EP

40'

1010+00

LIMIT OF DITCH

LIMIT OF DITCH TOE OF FILL

ROADWAY ROW

RELOCATE CANAL

ROADWAY ROW

RELOCATE CANAL

LIMIT OF DITCH

LIMIT OF DITCH TOE OF FILL

MATCH LINE -SEE CT1116

## RETAINING WALL DATA

| NO. | LOCATION | | LENGTH | MAX HEIGHT |
|---|---|---|---|---|
| | BEGIN | END | | |
| 1 | 180.97' LT "FMV" 116+66.20 | 94.02 RT "FMV" 117+50.65 | 288' | 30' |

100 0 100 200

SCALE: 1"=100'

04/02/2014 - RFP No.: HSR 13-57

$FILE$ $TIME$ $DATE$ $USER$

| REV | DATE | BY | CHK | APP | DESCRIPTION |
|---|---|---|---|---|---|

DESIGNED BY A. CANNON
DRAWN BY E. SUDHAUSEN
CHECKED BY S. BROWN
IN CHARGE R. COFFIN
DATE 12/31/13

**RECORD SET 15% DESIGN SUBMISSION - NOT FOR CONSTRUCTION**

URS | HMM | ARUP

CALIFORNIA HIGH-SPEED TRAIN

CALIFORNIA HIGH-SPEED RAIL AUTHORITY

# CALIFORNIA HIGH-SPEED TRAIN PROJECT
# FRESNO TO BAKERSFIELD

MONMOUTH SUBSECTION
ALIGNMENT M
GRADE SEPARATION LAYOUT
E MOUNTAIN VIEW AVE

CONTRACT NO. HST 06-0003
DRAWING NO. CT1113
SCALE AS SHOWN
SHEET NO. 11 OF 32

## LINE DATA

| NO. | BEARING | DISTANCE |
|---|---|---|
| 1 | S89°02'05"E | 4200.00' |
| 5 | S00°27'55"W | 170.00' |

## CURVE DATA

| NO. | R | Δ | T | L |
|---|---|---|---|---|
| 3 | 1100.00' | 56°27'45" | 590.59' | 1084.00' |

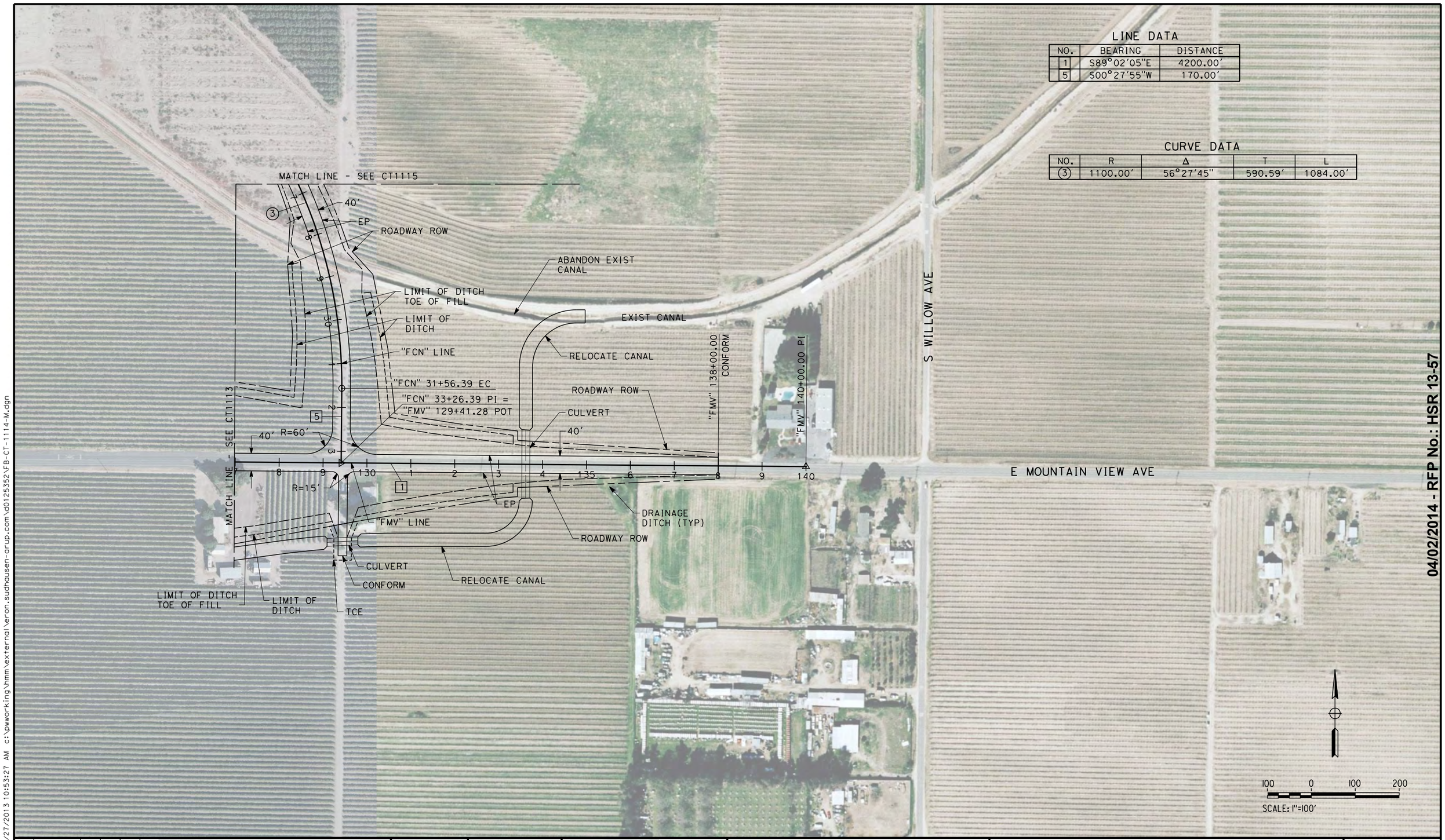


| REV | DATE | BY | CHK | APP | DESCRIPTION |
|---|---|---|---|---|---|

DESIGNED BY A. CANNON
DRAWN BY E. SUDHAUSEN
CHECKED BY S. BROWN
IN CHARGE R. COFFIN
DATE 12/31/13

**RECORD SET 15% DESIGN SUBMISSION - NOT FOR CONSTRUCTION**

URS | HMM | ARUP
CALIFORNIA HIGH-SPEED TRAIN

CALIFORNIA HIGH-SPEED RAIL AUTHORITY

# CALIFORNIA HIGH-SPEED TRAIN PROJECT FRESNO TO BAKERSFIELD

MONMOUTH SUBSECTION
ALIGNMENT M
GRADE SEPARATION LAYOUT
E MOUNTAIN VIEW AVE

CONTRACT NO. HSR 06-0003
DRAWING NO. CT1114
SCALE AS SHOWN
SHEET NO. 12 OF 32

04/02/2014 - RFP No.: HSR 13-57

eron.sudhausen 12/27/2013 10:53:27 AM c:\pwworking\hmm\external\eron.sudhausen-arup.com\d0125352\FB-CT-1114-M.dgn

## LINE DATA

| NO. | BEARING | DISTANCE |
|---|---|---|
| 3 | S00°34'37"W | 150.00' |
| 4 | S55°59'50"E | 243.80' |

## CURVE DATA

| NO. | R | Δ | T | L |
|---|---|---|---|---|
| (2) | 1700.00' | 56°34'27" | 914.86' | 1678.59' |
| (3) | 1100.00' | 56°27'45" | 590.59' | 1084.00' |

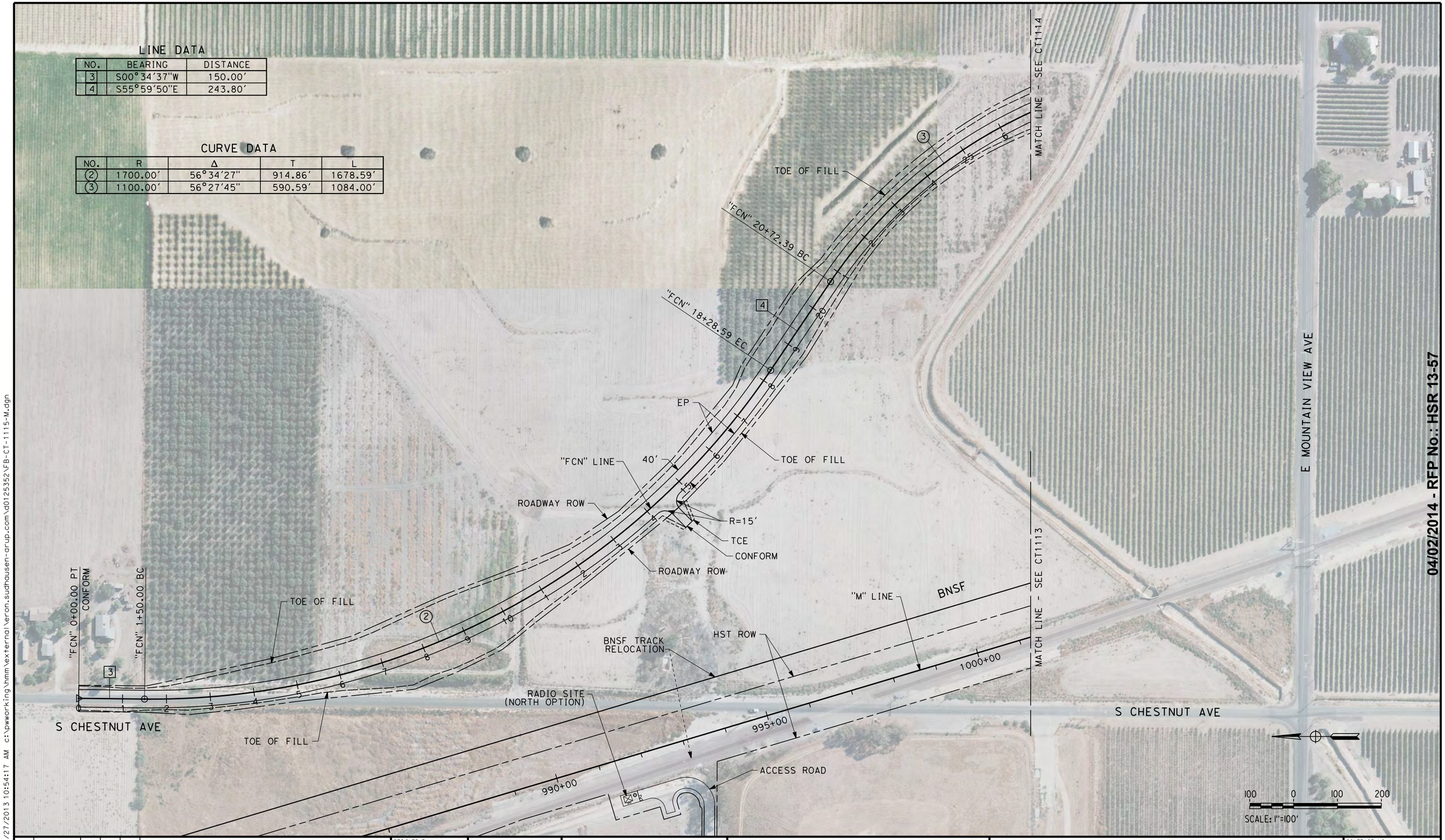


04/02/2014 - RFP No.: HSR 13-57

| REV | DATE | BY | CHK | APP | DESCRIPTION |
|---|---|---|---|---|---|

DESIGNED BY A. CANNON
DRAWN BY E. SUDHAUSEN
CHECKED BY S. BROWN
IN CHARGE R. COFFIN
DATE 12/31/13

**RECORD SET 15% DESIGN SUBMISSION - NOT FOR CONSTRUCTION**

URS | HMM | ARUP
CALIFORNIA HIGH-SPEED TRAIN

CALIFORNIA
HIGH-SPEED RAIL AUTHORITY

# CALIFORNIA HIGH-SPEED TRAIN PROJECT
# FRESNO TO BAKERSFIELD

MONMOUTH SUBSECTION
ALIGNMENT M
ROADWAY LAYOUT
S CHESTNUT AVE (NORTH)

CONTRACT NO. HSR 06-0003
DRAWING NO. CT1115
SCALE AS SHOWN
SHEET NO. 13 OF 32

eron.sudhousen 12/27/2013 10:54:17 AM c:\pwworking\hmm\external\eron.sudhousen-arup.com\d0125352\FB-CT-1115-M.dgn

LINE DATA

| NO. | BEARING | DISTANCE |
|---|---|---|
| 6 | S00°35'56"W | 1600.00' |

CANAL REALIGNMENT
BNSF TRACK RELOCATION
BNSF
1025+00
1020+00
1015+00
"M" LINE
HST ROW
CULVERT
ROADWAY ROW
LIMIT OF DITCH
TOE OF FILL
CULVERT
CONFORM
"FCS" 16+00.00 PI CONFORM
R=15'
CONFORM
R=15'
40' "FCS" LINE
MATCH LINE - SEE CT 1113
S CHESTNUT AVE
5 6 7 8 9 10 1 2 3 4 5 6
6
R=15'
EP
LIMIT OF DITCH
ROADWAY ROW
TOE OF FILL
DRAINAGE DITCH (TYP)
CANAL REALIGNMENT
E MOUNTAIN VIEW AVE
CANAL REALIGNMENT
EXIST CANAL

100 0 100 200
SCALE: 1"=100'

04/02/2014 - RFP No.: HSR 13-57

$FILE$
$TIME$
$DATE$
$USER$

| REV | DATE | BY | CHK | APP | DESCRIPTION |
|---|---|---|---|---|---|

DESIGNED BY A. CANNON
DRAWN BY E. SUDHAUSEN
CHECKED BY S. BROWN
IN CHARGE R. COFFIN
DATE 12/31/13

**RECORD SET 15% DESIGN SUBMISSION - NOT FOR CONSTRUCTION**

URS | HMM | ARUP
California High-Speed Train

CALIFORNIA
HIGH-SPEED RAIL AUTHORITY

# CALIFORNIA HIGH-SPEED TRAIN PROJECT
# FRESNO TO BAKERSFIELD

MONMOUTH SUBSECTION
ALIGNMENT M
ROADWAY LAYOUT
S CHESTNUT AVE (SOUTH)

CONTRACT NO. HSR 06-0003
DRAWING NO. CT1116
SCALE AS SHOWN
SHEET NO. 14 OF 32

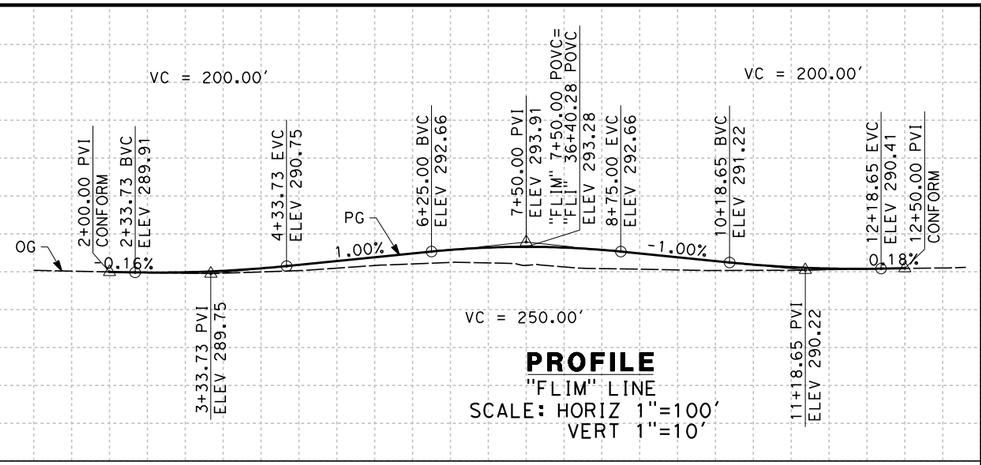


**PROFILE**
"FLIM" LINE
SCALE: HORIZ 1"=100'
VERT 1"=10'

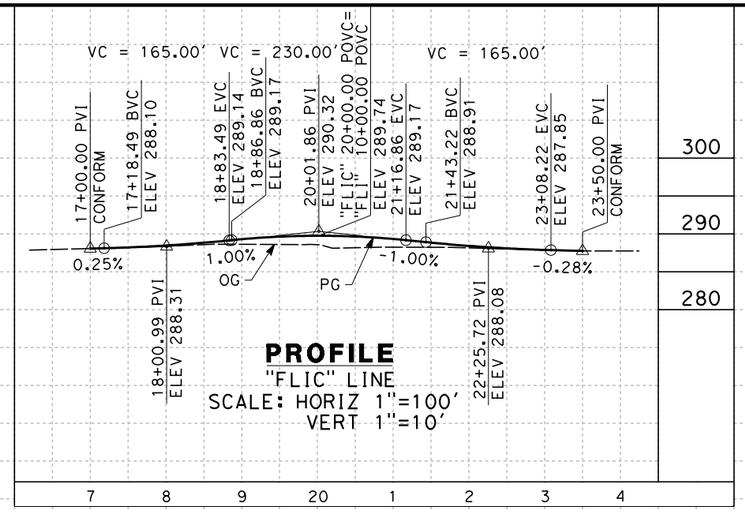


**PROFILE**
"FLIC" LINE
SCALE: HORIZ 1"=100'
VERT 1"=10'

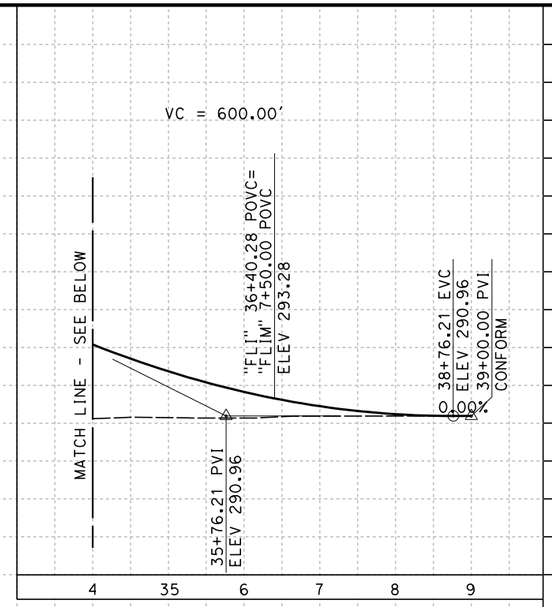


NOTES:
1. MINIMUM VERTICAL CLEARANCE OVER HST IS 27' FROM TOP OF RAIL
2. MINIMUM VERTICAL CLEARANCE OVER BNSF IS 24.0' FROM TOP OF RAIL

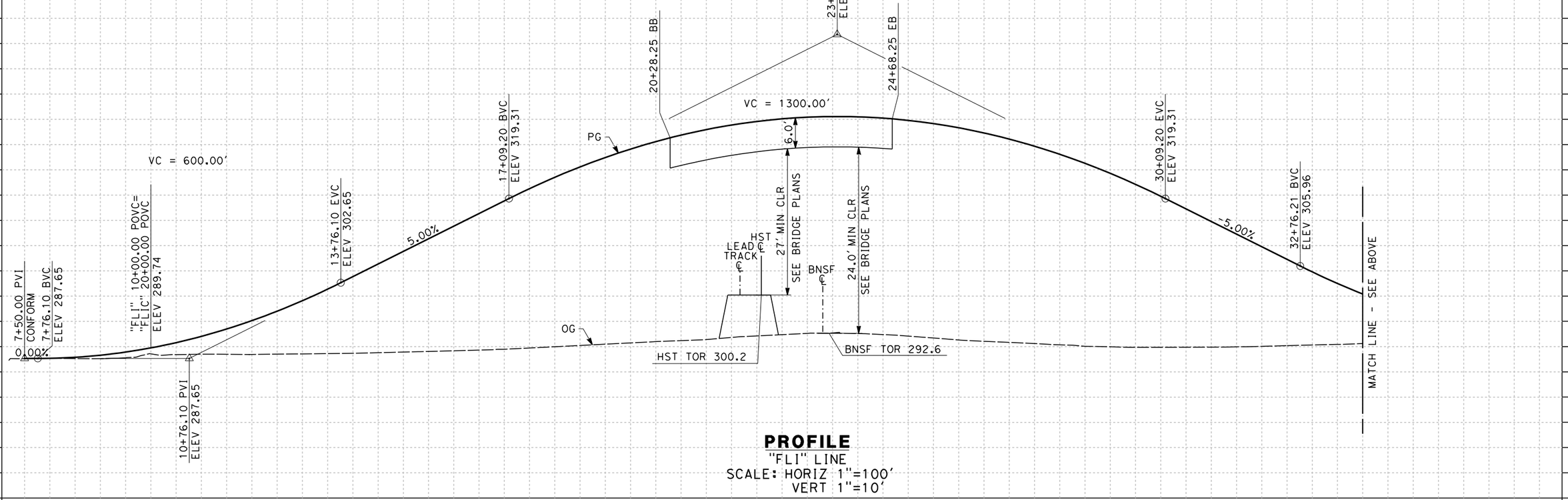


**PROFILE**
"FLI" LINE
SCALE: HORIZ 1"=100'
VERT 1"=10'

| STATION | 8 | 9 | 10 | 1 | 2 | 3 | 4 | 15 | 6 | 7 | 8 | 9 | 20 | 1 | 2 | 3 | 4 | 25 | 6 | 7 | 8 | 9 | 30 | 1 | 2 | 3 | 4 | TOTAL |
|---|---|---|---|---|---|---|---|---|---|---|---|---|---|---|---|---|---|---|---|---|---|---|---|---|---|---|---|---|
| CY Exc | | | | | | | | | | | | | | | | | | | | | | | | | | | | |
| CY Emb | | | | | | | | | | | | | | | | | | | | | | | | | | | | |

| REV | DATE | BY | CHK | APP | DESCRIPTION |
|---|---|---|---|---|---|

DESIGNED BY A. CANNON
DRAWN BY E. SUDHAUSEN
CHECKED BY S. BROWN
IN CHARGE R. COFFIN
DATE 12/31/13

**RECORD SET 15% DESIGN SUBMISSION - NOT FOR CONSTRUCTION**

URS | HMM | ARUP
CALIFORNIA HIGH-SPEED TRAIN

CALIFORNIA
HIGH-SPEED RAIL AUTHORITY

# CALIFORNIA HIGH-SPEED TRAIN PROJECT
# FRESNO TO BAKERSFIELD
MONMOUTH SUBSECTION
ALIGNMENT M
GRADE SEPARATION PROFILE
E LINCOLN AVE AND S MAPLE AT E LINCOLN AVE

CONTRACT NO. HSR 06-0003
DRAWING NO. CT2101
SCALE AS SHOWN
SHEET NO. 15 OF 32

04/02/2014 - RFP No: HSR13-57

eron.sudhausen 12/27/2013 11:27:52 AM c:\pwworking\hmm\external\eron.sudhausen-arup.com\d0125352\FB-CT-2101-M.dgn

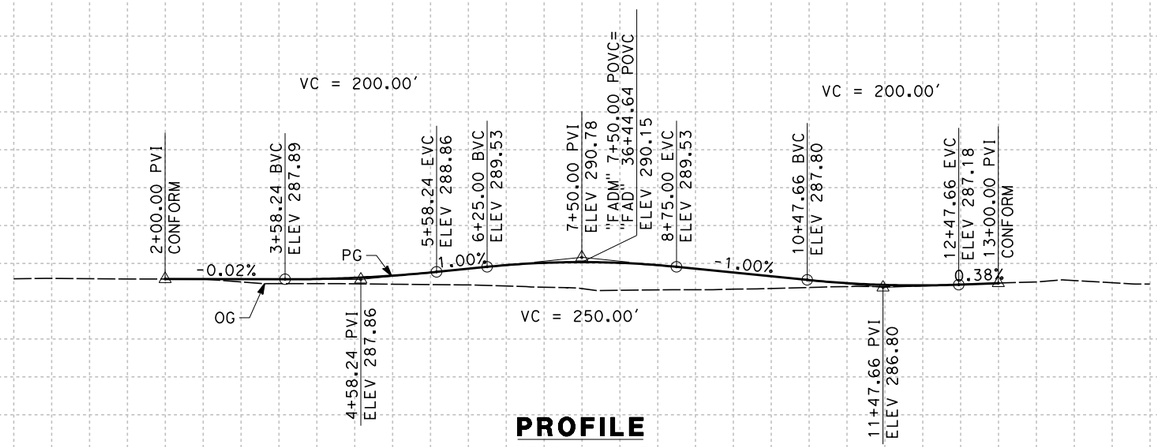


**PROFILE**

"FADM" LINE
SCALE: HORIZ 1"=100'
VERT 1"=10'

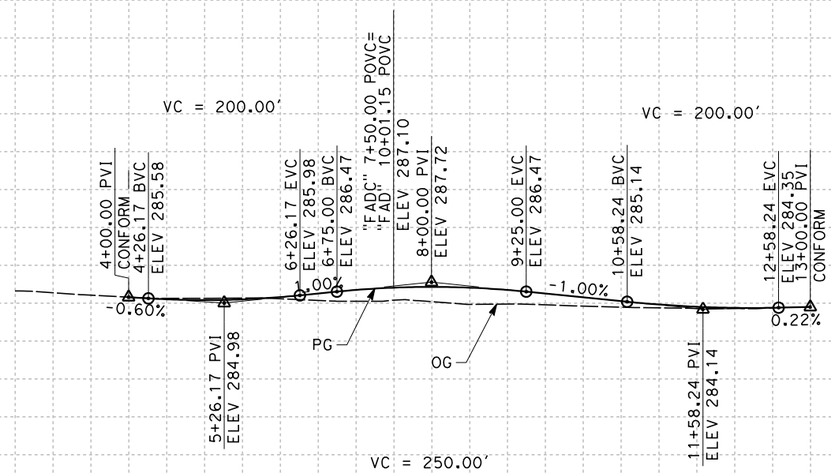


**PROFILE**

"FADC" LINE
SCALE: HORIZ 1"=100'
VERT 1"=10'

| STATION | 0 | 1 | 2 | 3 | 4 | 5 | 6 | 7 | 8 | 9 | 10 | 1 | 2 | 3 | 4 | 5 | TOTAL |
|---|---|---|---|---|---|---|---|---|---|---|---|---|---|---|---|---|---|
| CY Exc | | | | | | | | | | | | | | | | | |
| CY Emb | | | | | | | | | | | | | | | | | |

| REV | DATE | BY | CHK | APP | DESCRIPTION |
|---|---|---|---|---|---|

DESIGNED BY A. CANNON
DRAWN BY E. SUDHAUSEN
CHECKED BY S. BROWN
IN CHARGE R. COFFIN
DATE 12/31/13

**RECORD SET 15% DESIGN SUBMISSION - NOT FOR CONSTRUCTION**

URS | HMM | ARUP
California High-Speed Train

CALIFORNIA HIGH-SPEED RAIL AUTHORITY

**CALIFORNIA HIGH-SPEED TRAIN PROJECT**
**FRESNO TO BAKERSFIELD**
MONMOUTH SUBSECTION
ALIGNMENT M
ROADWAY PROFILE
S CEDAR AND S MAPLE AT E ADAMS AVE

CONTRACT NO. HSR 06-0003
DRAWING NO. CT2102
SCALE AS SHOWN
SHEET NO. 16 OF 32

04/02/2014 - RFP No.: HSR 13-57

eron.sudhausen 12/27/2013 3:09:15 PM c:\pwworking\hmm\external\eron.sudhausen-arup.com\d0125352\FB-CT-2102-M.dgn

NOTES:
1. MINIMUM VERTICAL CLEARANCE OVER HST IS 27' FROM TOP OF RAIL
2. MINIMUM VERTICAL CLEARANCE OVER BNSF IS 24.0' FROM TOP OF RAIL

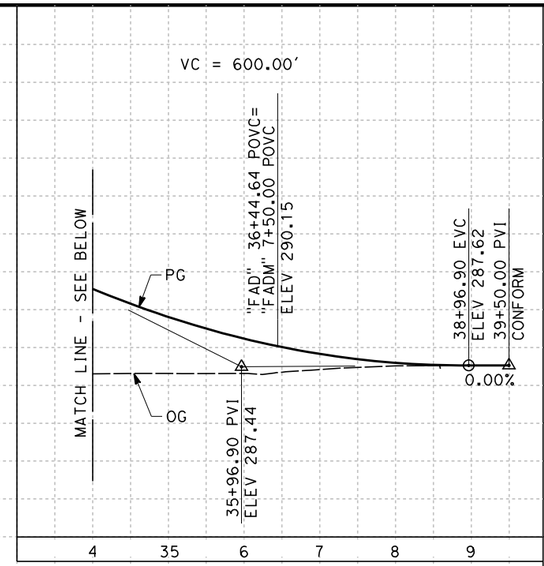


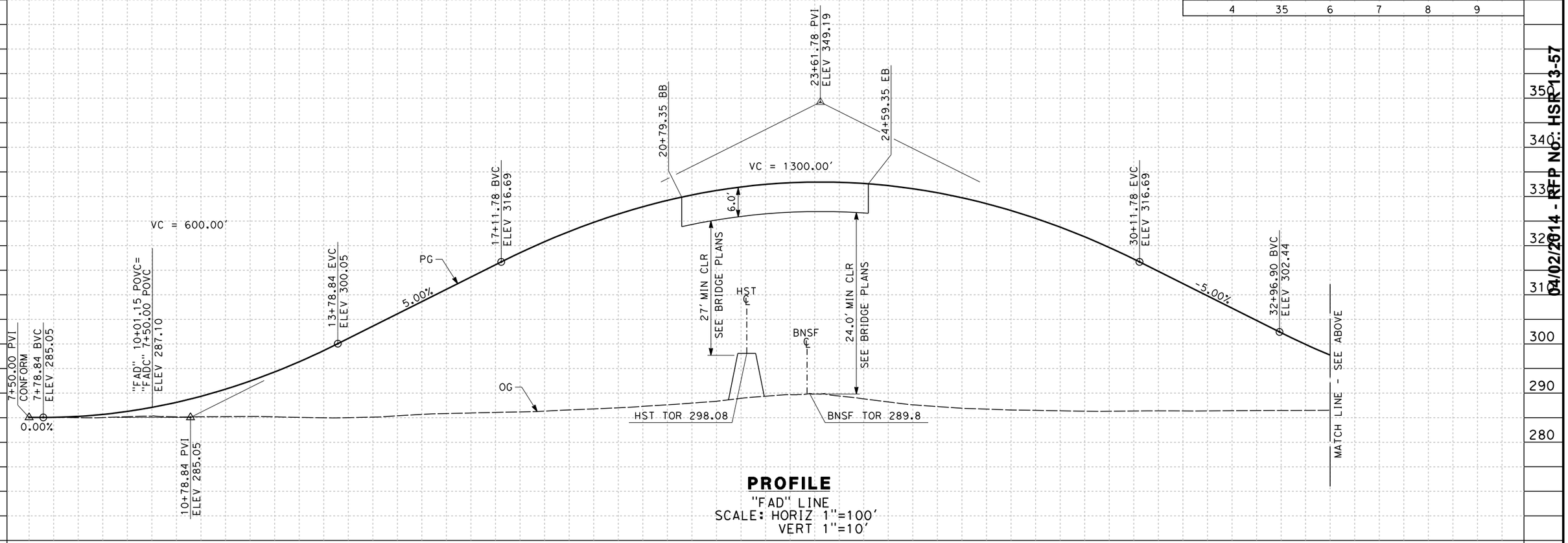


## PROFILE

"FAD" LINE
SCALE: HORIZ 1"=100'
VERT 1"=10'

| STATION | 8 | 9 | 10 | 1 | 2 | 3 | 4 | 15 | 6 | 7 | 8 | 9 | 20 | 1 | 2 | 3 | 4 | 25 | 6 | 7 | 8 | 9 | 30 | 1 | 2 | 3 | 4 | TOTAL |
|---|---|---|---|---|---|---|---|---|---|---|---|---|---|---|---|---|---|---|---|---|---|---|---|---|---|---|---|---|
| CY Exc | | | | | | | | | | | | | | | | | | | | | | | | | | | | |
| CY Emb | | | | | | | | | | | | | | | | | | | | | | | | | | | | |

| REV | DATE | BY | CHK | APP | DESCRIPTION |
|---|---|---|---|---|---|

DESIGNED BY A. CANNON
DRAWN BY E. SUDHAUSEN
CHECKED BY S. BROWN
IN CHARGE R. COFFIN
DATE 12/31/13

**RECORD SET 15% DESIGN SUBMISSION - NOT FOR CONSTRUCTION**

URS | HMM | ARUP
CALIFORNIA HIGH-SPEED TRAIN

CALIFORNIA HIGH-SPEED RAIL AUTHORITY

**CALIFORNIA HIGH-SPEED TRAIN PROJECT**
**FRESNO TO BAKERSFIELD**
MONMOUTH SUBSECTION
ALIGNMENT M
GRADE SEPARATION PROFILE
E ADAMS AVE

CONTRACT NO. HSR 06-0003
DRAWING NO. CT2103
SCALE AS SHOWN
SHEET NO. 17 OF 32

04/02/2014 - RFP No: HSR13-57

eron.sudhausen 12/27/2013 1:48:32 PM c:\pwworking\hmm\external\eron.sudhausen-arup.com\d0125352\VFB-CT-2103-M.dgn

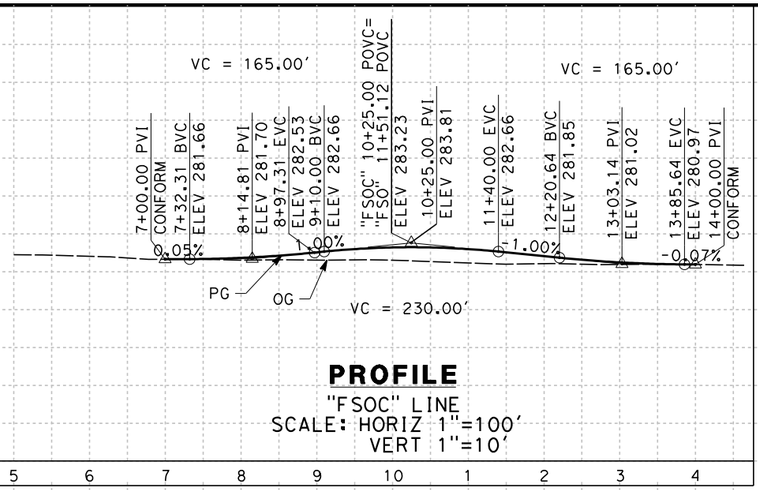


**PROFILE**
"FSOC" LINE
SCALE: HORIZ 1"=100'
VERT 1"=10'

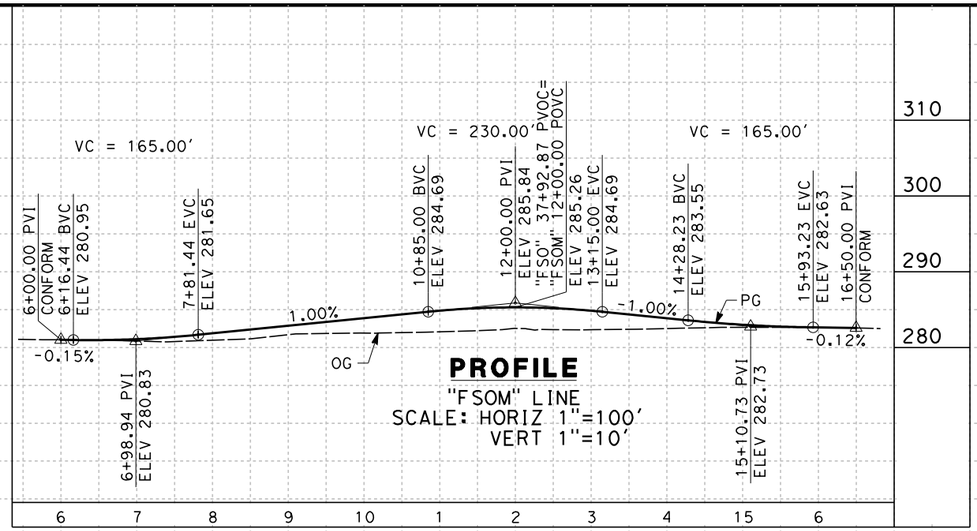


**PROFILE**
"FSOM" LINE
SCALE: HORIZ 1"=100'
VERT 1"=10'

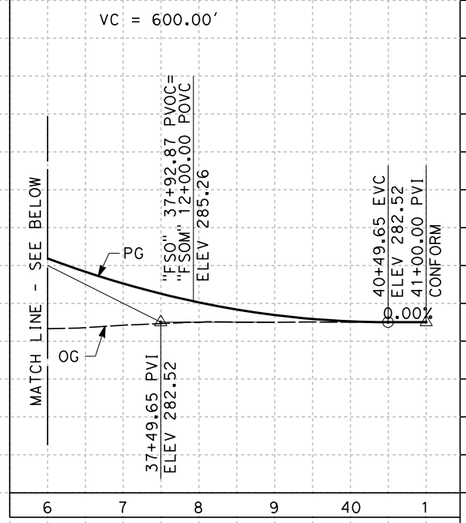


NOTES:
1. MINIMUM VERTICAL CLEARANCE OVER HST IS 27' FROM TOP OF RAIL
2. MINIMUM VERTICAL CLEARANCE OVER BNSF IS 24.0' FROM TOP OF RAIL

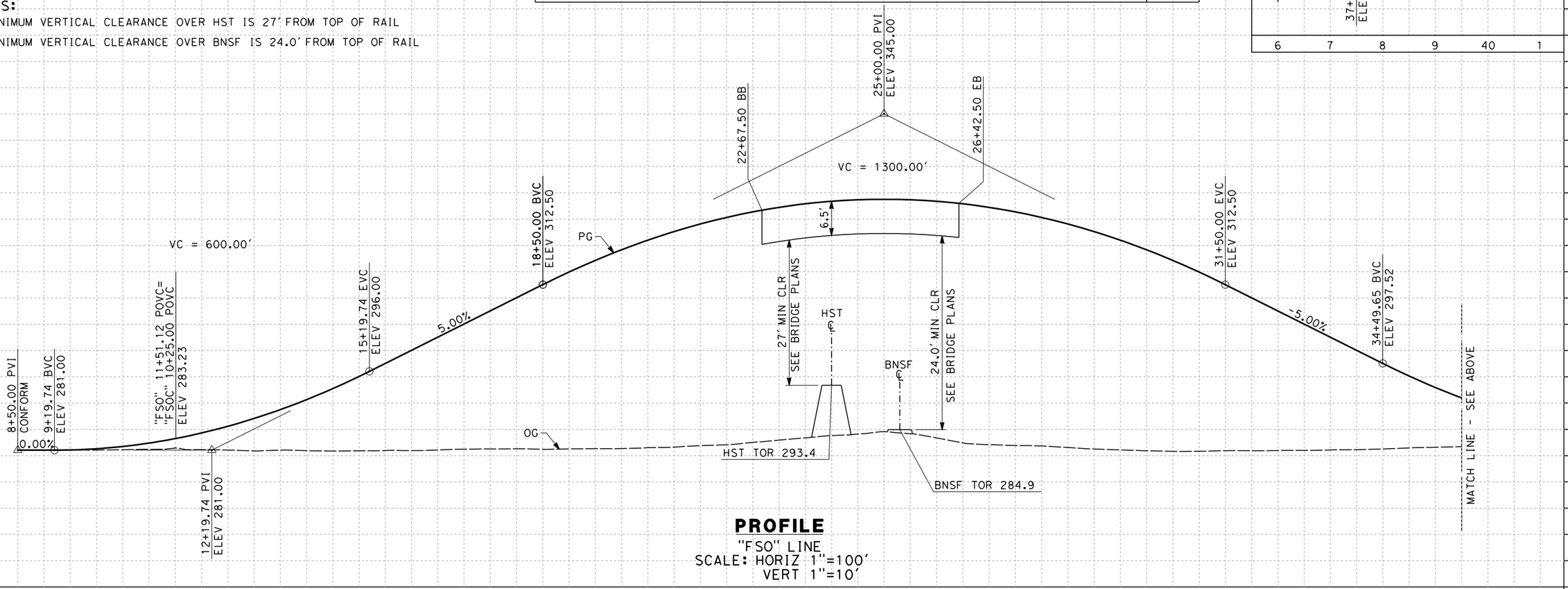


**PROFILE**
"FSO" LINE
SCALE: HORIZ 1"=100'
VERT 1"=10'

| STATION | | |

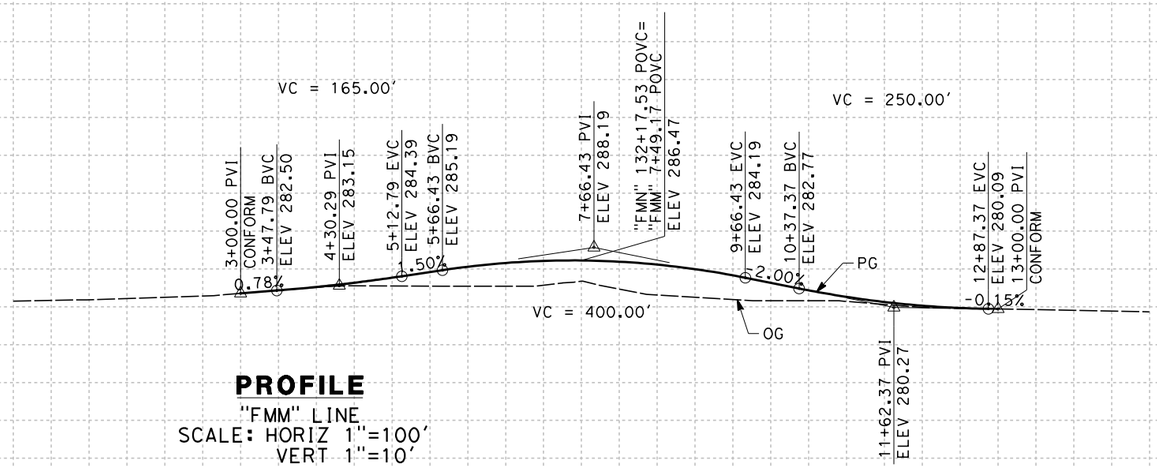


**PROFILE**

"FMM" LINE
SCALE: HORIZ 1"=100'
VERT 1"=10'

| STATION | 0 | 1 | 2 | 3 | 4 | 5 | 6 | 7 | 8 | 9 | 10 | 1 | 2 | 3 | 4 | 15 | TOTAL |
|---|---|---|---|---|---|---|---|---|---|---|---|---|---|---|---|---|---|
| CY Exc | | | | | | | | | | | | | | | | | |
| CY Emb | | | | | | | | | | | | | | | | | |

| REV | DATE | BY | CHK | APP | DESCRIPTION |
|---|---|---|---|---|---|

DESIGNED BY A. CANNON
DRAWN BY E. SUDHAUSEN
CHECKED BY S. BROWN
IN CHARGE R. COFFIN
DATE 12/31/13

**RECORD SET 15% DESIGN SUBMISSION - NOT FOR CONSTRUCTION**

URS | HMM | ARUP
CALIFORNIA HIGH-SPEED TRAIN

CALIFORNIA HIGH-SPEED RAIL AUTHORITY

**CALIFORNIA HIGH-SPEED TRAIN PROJECT**
**FRESNO TO BAKERSFIELD**
MONMOUTH SUBSECTION
ALIGNMENT M
ROADWAY PROFILE
S MAPLE AT E MANNING AVE

CONTRACT NO. HSR 06-0003
DRAWING NO. CT2105
SCALE AS SHOWN
SHEET NO. 19 OF 32

04/02/2014 - RFP No.: HSR 13-57

eron.sudhausen 12/27/2013 2:02:11 PM c:\pwworking\hmm\external\eron.sudhausen-arup.com\d0125352\FB-CT-2105-M.dgn

NOTES:

1. MINIMUM VERTICAL CLEARANCE OVER HST IS 27' FROM TOP OF RAIL
2. MINIMUM VERTICAL CLEARANCE OVER BNSF IS 24.0' FROM TOP OF RAIL
3. MINIMUM VERTICAL CLEARANCE OVER LOCAL STREET IS 16.5' FROM ROAD SURFACE

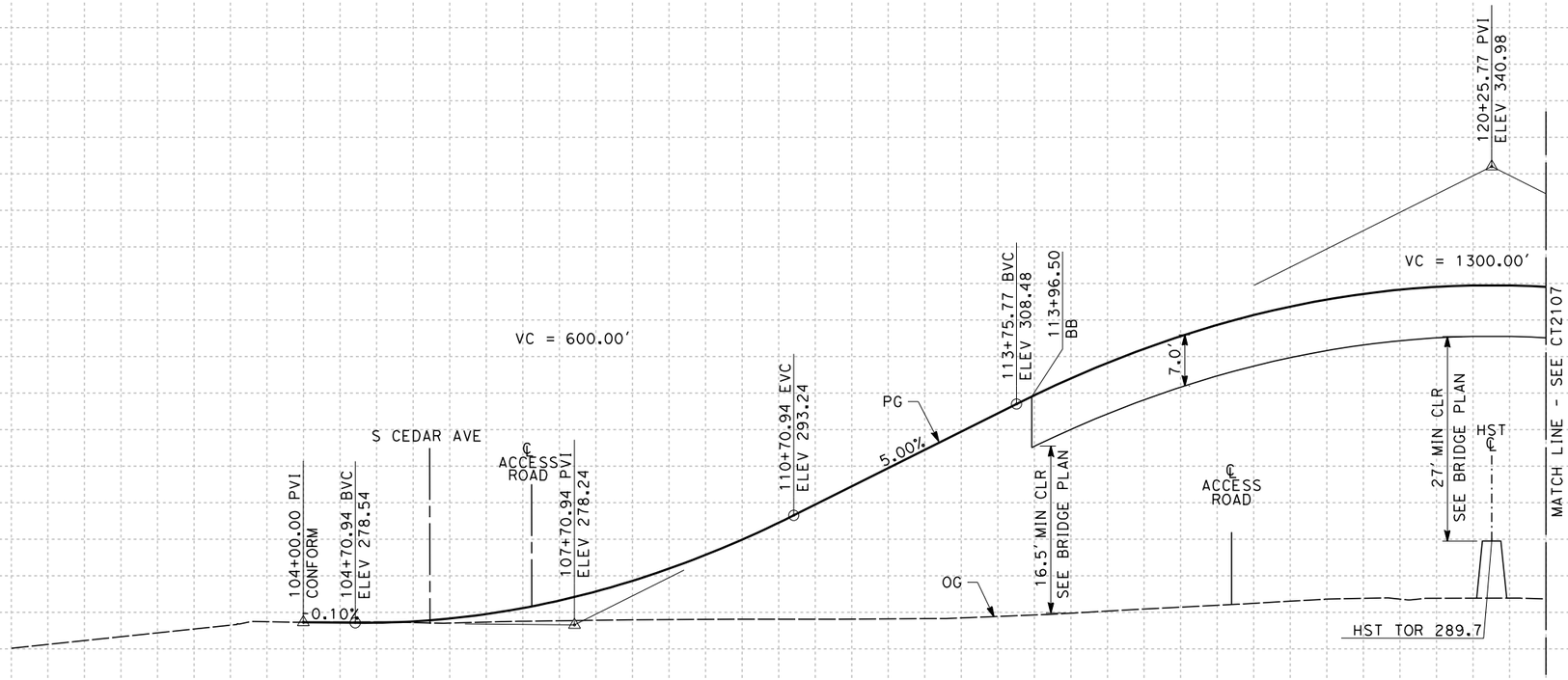


## PROFILE

"FMN" LINE
SCALE: HORIZ 1"=100'
VERT 1"=10'

| STATION | 100 | 1 | 2 | 3 | 4 | 105 | 6 | 7 | 8 | 9 | 110 | 1 | 2 | 3 | 4 | 115 | 6 | 7 | 8 | 9 | 120 | 1 | TOTAL |
|---|---|---|---|---|---|---|---|---|---|---|---|---|---|---|---|---|---|---|---|---|---|---|---|
| CY Exc | | | | | | | | | | | | | | | | | | | | | | | |
| CY Emb | | | | | | | | | | | | | | | | | | | | | | | |

| REV | DATE | BY | CHK | APP | DESCRIPTION |
|---|---|---|---|---|---|

DESIGNED BY A. CANNON
DRAWN BY E. SUDHAUSEN
CHECKED BY S. BROWN
IN CHARGE R. COFFIN
DATE 12/31/13

**RECORD SET 15% DESIGN SUBMISSION - NOT FOR CONSTRUCTION**

URS | HMM | ARUP
CALIFORNIA HIGH-SPEED TRAIN

CALIFORNIA
HIGH-SPEED RAIL AUTHORITY

# CALIFORNIA HIGH-SPEED TRAIN PROJECT
## FRESNO TO BAKERSFIELD
MONMOUTH SUBSECTION
ALIGNMENT M
GRADE SEPARATION PROFILE
E MANNING AVE

CONTRACT NO. HSR 06-0003
DRAWING NO. CT2106
SCALE AS SHOWN
SHEET NO. 20 OF 32

04/02/2014 - RFP No.: HSR 13-57

c:\pwworking\hmm\external\eron.sudhausen-arup.com\d0125352\FB-CT-2106-M.dgn
12/27/2013 2:03:41 PM
eron.sudhausen

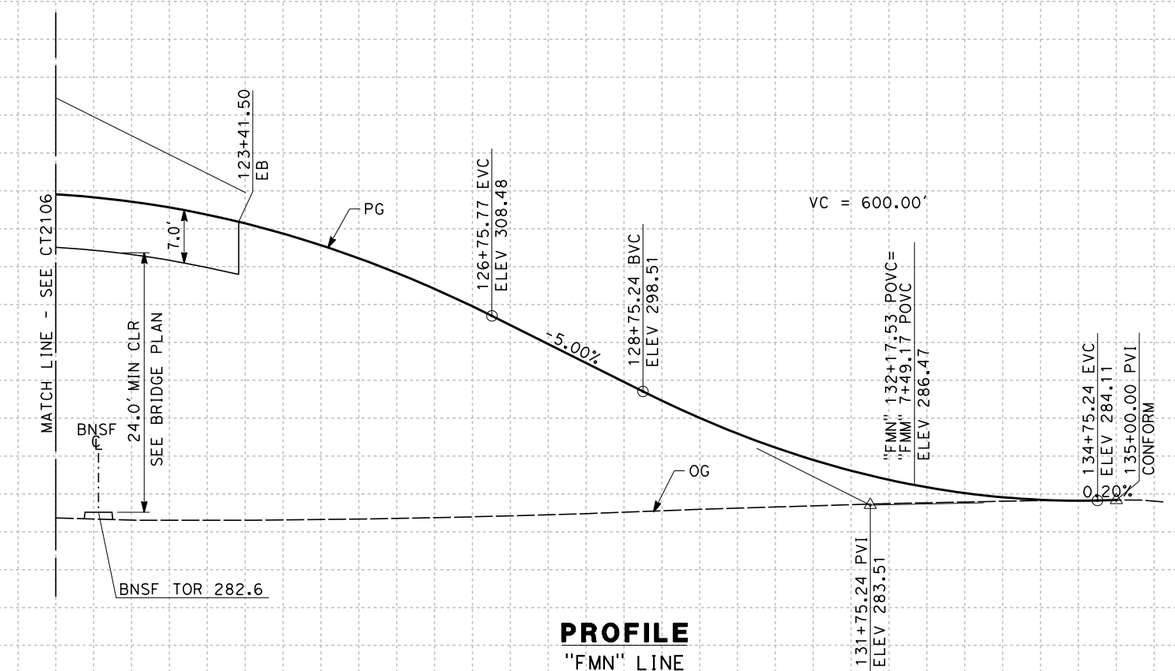


## PROFILE

"FMN" LINE
SCALE: HORIZ 1"=100'
VERT 1"=10'

| STATION | 1 | 2 | 3 | 4 | 125 | 6 | 7 | 8 | 9 | 130 | 1 | 2 | 3 | 4 | 135 | TOTAL |
|---|---|---|---|---|---|---|---|---|---|---|---|---|---|---|---|---|
| CY Exc | | | | | | | | | | | | | | | | |
| CY Emb | | | | | | | | | | | | | | | | |

| REV | DATE | BY | CHK | APP | DESCRIPTION |
|---|---|---|---|---|---|

DESIGNED BY A. CANNON
DRAWN BY E. SUDHAUSEN
CHECKED BY S. BROWN
IN CHARGE R. COFFIN
DATE 12/31/13

**RECORD SET 15% DESIGN SUBMISSION - NOT FOR CONSTRUCTION**

URS | HMM | ARUP
CALIFORNIA HIGH-SPEED TRAIN

CALIFORNIA HIGH-SPEED RAIL AUTHORITY

**CALIFORNIA HIGH-SPEED TRAIN PROJECT**
**FRESNO TO BAKERSFIELD**
MONMOUTH SUBSECTION
ALIGNMENT M
GRADE SEPARATION PROFILE
E MANNING AVE

CONTRACT NO. HSR 06-0003
DRAWING NO. CT2107
SCALE AS SHOWN
SHEET NO. 21 OF 32

04/02/2014- RFP No.: HSR 13-57

eron.sudhausen 12/27/2013 2:07:32 PM c:\pwworking\hmm\external\eron.sudhausen-arup.com\d0125352\FB-CT-2107-M.dgn

NOTES:
1. MINIMUM VERTICAL CLEARANCE OVER HST IS 27' FROM TOP OF RAIL
2. MINIMUM VERTICAL CLEARANCE OVER BNSF IS 24.0' FROM TOP OF RAIL

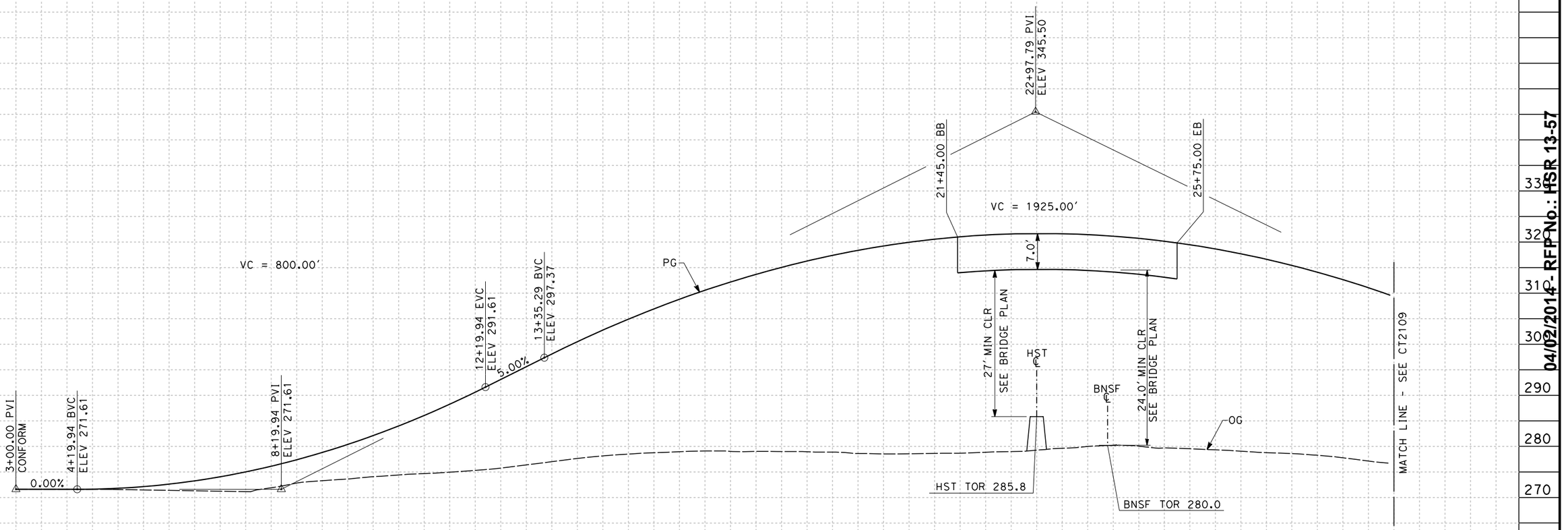


**PROFILE**
"FFL" LINE
SCALE: HORIZ 1"=100'
VERT 1"=10'

| STATION | 3 | 4 | 5 | 6 | 7 | 8 | 9 | 10 | 1 | 2 | 3 | 4 | 15 | 6 | 7 | 8 | 9 | 20 | 1 | 2 | 3 | 4 | 25 | 6 | 7 | 8 | 9 | 30 | TOTAL |
|---|---|---|---|---|---|---|---|---|---|---|---|---|---|---|---|---|---|---|---|---|---|---|---|---|---|---|---|---|---|
| CY Exc | | | | | | | | | | | | | | | | | | | | | | | | | | | | | |
| CY Emb | | | | | | | | | | | | | | | | | | | | | | | | | | | | | |

| REV | DATE | BY | CHK | APP | DESCRIPTION |
|---|---|---|---|---|---|

DESIGNED BY A. CANNON
DRAWN BY E. SUDHAUSEN
CHECKED BY S. BROWN
IN CHARGE R. COFFIN
DATE 12/31/13

**RECORD SET 15% DESIGN SUBMISSION - NOT FOR CONSTRUCTION**

URS | HMM | ARUP
CALIFORNIA HIGH-SPEED TRAIN

CALIFORNIA HIGH-SPEED RAIL AUTHORITY

**CALIFORNIA HIGH-SPEED TRAIN PROJECT**
**FRESNO TO BAKERSFIELD**
MONMOUTH SUBSECTION
ALIGNMENT M
GRADE SEPARATION PROFILE
E FLORAL AVE

CONTRACT NO. HSR 06-0003
DRAWING NO. CT2108
SCALE AS SHOWN
SHEET NO. 22 OF 32

04/02/2014 - RFP No.: HSR 13-57

eron.sudhausen 12/27/2013 2:13:50 PM c:\pwworking\hmm\external\eron.sudhausen-arup.com\d0125352\VFB-CT-2108-M.dgn

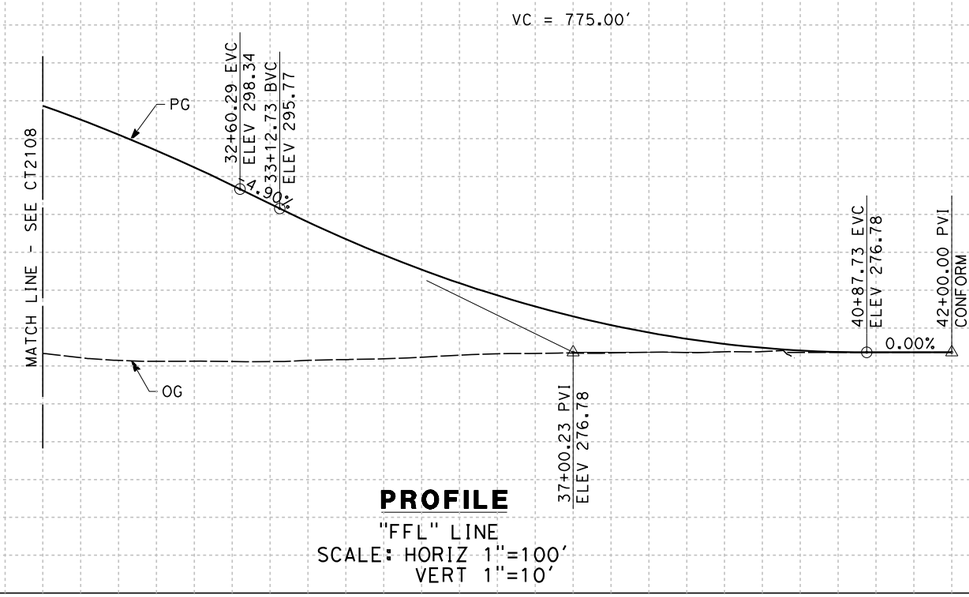


## PROFILE

"FFL" LINE
SCALE: HORIZ 1"=100'
VERT 1"=10'

| STATION | 30 | 1 | 2 | 3 | 4 | 35 | 6 | 7 | 8 | 9 | 40 | 1 | 2 | TOTAL |
|---|---|---|---|---|---|---|---|---|---|---|---|---|---|---|
| CY Exc | | | | | | | | | | | | | | |
| CY Emb | | | | | | | | | | | | | | |

| REV | DATE | BY | CHK | APP | DESCRIPTION |
|---|---|---|---|---|---|

DESIGNED BY A. CANNON
DRAWN BY E. SUDHAUSEN
CHECKED BY S. BROWN
IN CHARGE R. COFFIN
DATE 12/31/13

RECORD SET 15% DESIGN SUBMISSION - NOT FOR CONSTRUCTION

URS | HMM | ARUP
CALIFORNIA HIGH-SPEED TRAIN

CALIFORNIA HIGH-SPEED RAIL AUTHORITY

**CALIFORNIA HIGH-SPEED TRAIN PROJECT**
**FRESNO TO BAKERSFIELD**
MONMOUTH SUBSECTION
ALIGNMENT M
GRADE SEPARATION PROFILE
E FLORAL AVE

CONTRACT NO. HSR 06-0003
DRAWING NO. CT2109
SCALE AS SHOWN
SHEET NO. 23 OF 32

04/02/2014 - RFP No.: HSR 13-57

12/27/2013 2:31:03 PM c:\pwworking\hmm\external\eron.sudhausen-arup.com\d0125352\FB-CT-2109-M.dgn
eron.sudhausen

NOTES:
1. MINIMUM VERTICAL CLEARANCE OVER HST IS 27' FROM TOP OF RAIL
2. MINIMUM VERTICAL CLEARANCE OVER BNSF IS 24.0' FROM TOP OF RAIL

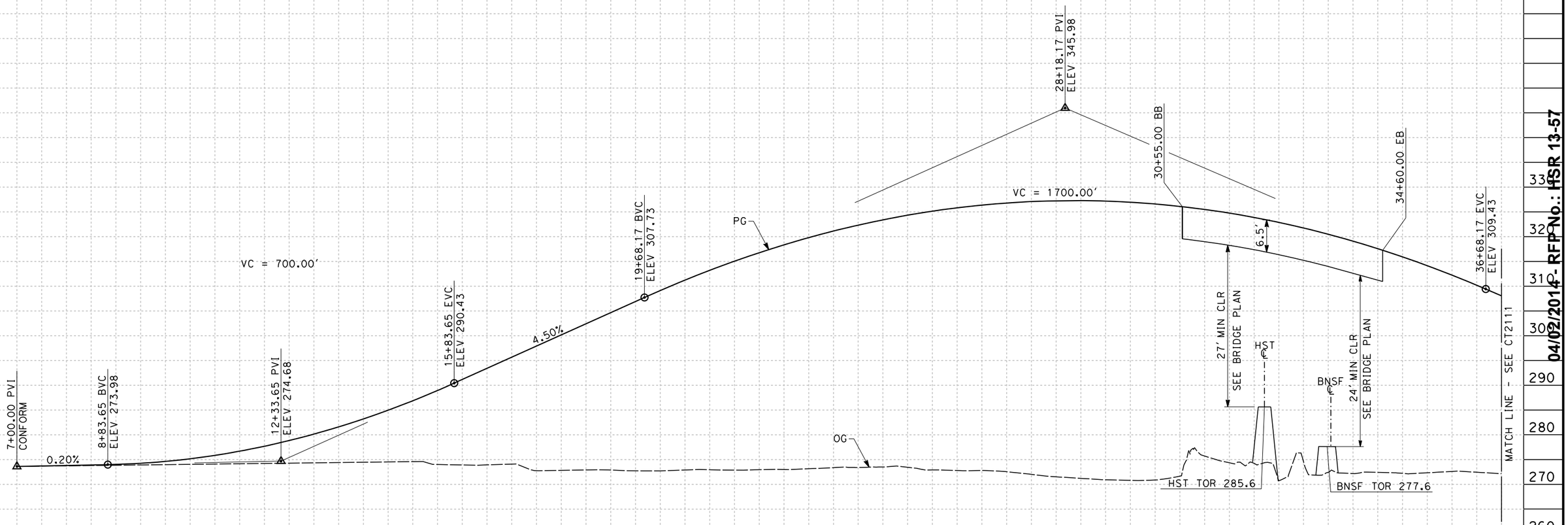


**PROFILE**
"FNE" LINE
SCALE: HORIZ 1"=100'
VERT 1"=10'

| STATION | 7 | 8 | 9 | 10 | 1 | 2 | 3 | 4 | 15 | 6 | 7 | 8 | 9 | 20 | 1 | 2 | 3 | 4 | 25 | 6 | 7 | 8 | 9 | 30 | 1 | 2 | 3 | 4 | 35 | 6 | 7 | TOTAL |
|---|---|---|---|---|---|---|---|---|---|---|---|---|---|---|---|---|---|---|---|---|---|---|---|---|---|---|---|---|---|---|---|---|
| CY Exc | | | | | | | | | | | | | | | | | | | | | | | | | | | | | | | | |
| CY Emb | | | | | | | | | | | | | | | | | | | | | | | | | | | | | | | | |

| REV | DATE | BY | CHK | APP | DESCRIPTION |
|---|---|---|---|---|---|

DESIGNED BY A. CANNON
DRAWN BY E. SUDHAUSEN
CHECKED BY S. BROWN
IN CHARGE R. COFFIN
DATE 12/31/13

RECORD SET 15% DESIGN SUBMISSION - NOT FOR CONSTRUCTION

URS | HMM | ARUP
CALIFORNIA HIGH-SPEED TRAIN

CALIFORNIA HIGH-SPEED RAIL AUTHORITY

**CALIFORNIA HIGH-SPEED TRAIN PROJECT**
**FRESNO TO BAKERSFIELD**
MONMOUTH SUBSECTION
ALIGNMENT M
GRADE SEPARATION PROFILE
E NEBRASKA AVE

CONTRACT NO. HSR 06-0003
DRAWING NO. CT2110
SCALE AS SHOWN
SHEET NO. 24 OF 32

04/02/2014 - RFP No.: HSR 13-57

12/27/2013 2:32:42 PM c:\pwworking\hmm\external\eron.sudhausen-arup.com\d0125352\FB-CT-2110-M.dgn
eron.sudhausen

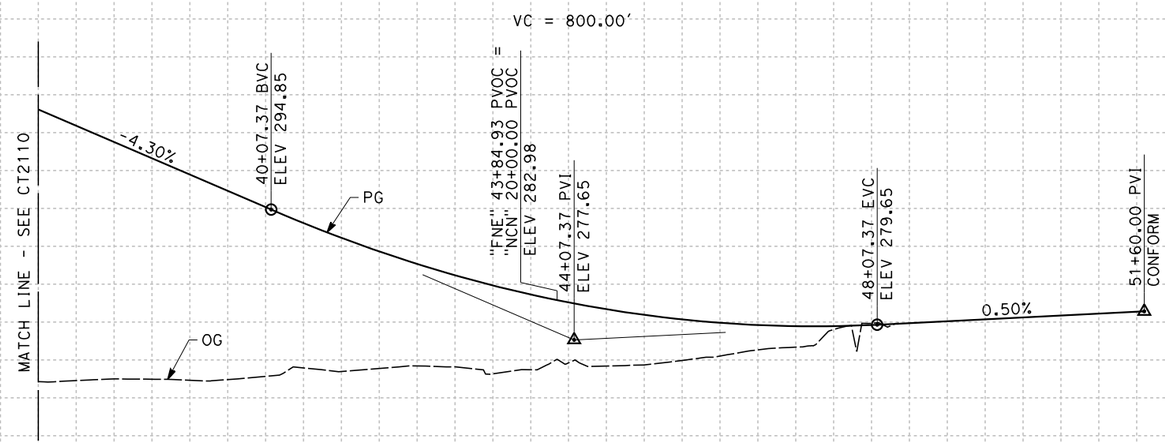


**PROFILE**
"FNE" LINE
SCALE: HORIZ 1"=100'
VERT 1"=10'

| STATION | 7 | 8 | 9 | 40 | 1 | 2 | 3 | 4 | 45 | 6 | 7 | 8 | 9 | 50 | 1 | 2 | TOTAL |
|---|---|---|---|---|---|---|---|---|---|---|---|---|---|---|---|---|---|
| CY Exc | | | | | | | | | | | | | | | | | |
| CY Emb | | | | | | | | | | | | | | | | | |

| REV | DATE | BY | CHK | APP | DESCRIPTION |
|---|---|---|---|---|---|

DESIGNED BY J. MONG
DRAWN BY E. SUDHAUSEN
CHECKED BY S. BROWN
IN CHARGE R. COFFIN
DATE 12/31/13

**RECORD SET 15% DESIGN SUBMISSION - NOT FOR CONSTRUCTION**

URS | HMM | ARUP
CALIFORNIA HIGH-SPEED TRAIN

CALIFORNIA
HIGH-SPEED RAIL AUTHORITY

**CALIFORNIA HIGH-SPEED TRAIN PROJECT**
**FRESNO TO BAKERSFIELD**
MONMOUTH SUBSECTION
ALIGNMENT M
GRADE SEPARATION PROFILE
E NEBRASKA AVE

CONTRACT NO. HSR 06-0003
DRAWING NO. CT2111
SCALE AS SHOWN
SHEET NO. 25 OF 32

04/02/2014 - RFP No.: HSR 13-57

12/27/2013 2:43:49 PM c:\pwworking\hmm\external\eron.sudhausen-arup.com\d0125352\FB-CT-2111-M.dgn
eron.sudhausen

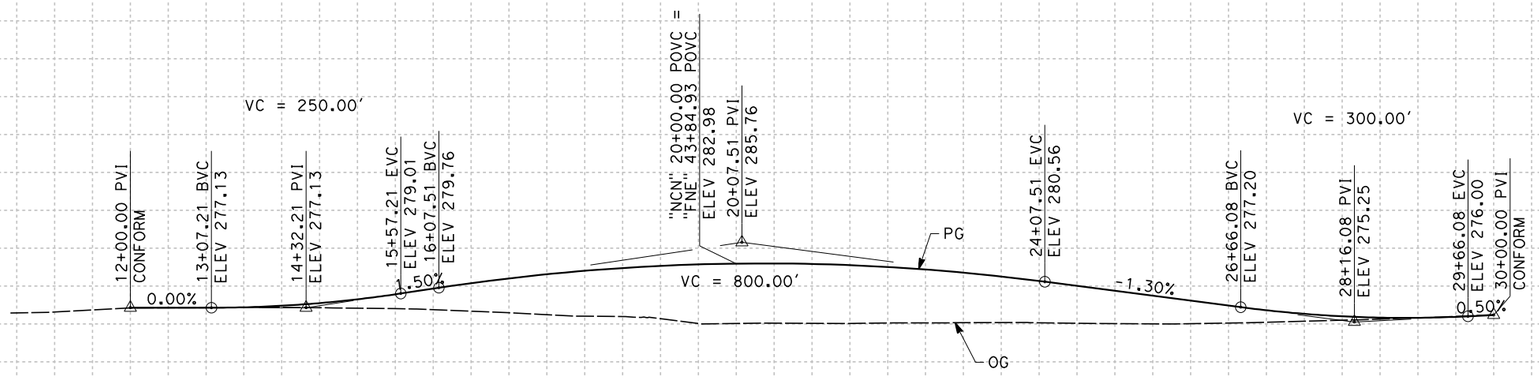


## PROFILE

"NCN" LINE

SCALE: HORIZ 1"=100'
VERT 1"=10'

| STATION | 10 | 1 | 2 | 3 | 4 | 15 | 6 | 7 | 8 | 9 | 20 | 1 | 2 | 3 | 4 | 25 | 6 | 7 | 8 | 9 | 30 | 1 | TOTAL |
|---|---|---|---|---|---|---|---|---|---|---|---|---|---|---|---|---|---|---|---|---|---|---|---|
| CY Exc | | | | | | | | | | | | | | | | | | | | | | | |
| CY Emb | | | | | | | | | | | | | | | | | | | | | | | |

| REV | DATE | BY | CHK | APP | DESCRIPTION |
|---|---|---|---|---|---|

DESIGNED BY A. CANNON
DRAWN BY E. SUDHAUSEN
CHECKED BY S. BROWN
IN CHARGE R. COFFIN
DATE 12/31/13

**RECORD SET 15% DESIGN SUBMISSION - NOT FOR CONSTRUCTION**

URS | HMM | ARUP
CALIFORNIA HIGH-SPEED TRAIN

CALIFORNIA HIGH-SPEED RAIL AUTHORITY

**CALIFORNIA HIGH-SPEED TRAIN PROJECT**
**FRESNO TO BAKERSFIELD**
MONMOUTH SUBSECTION
ALIGNMENT M
ROADWAY PROFILE
S CHESTNUT AT E NEBRASKA AVE

CONTRACT NO. HSR 06-0003
DRAWING NO. CT2112
SCALE AS SHOWN
SHEET NO. 26 OF 32

04/02/2014 - RFP No.: HSR 13-57

eron.sudhausen 12/27/2013 2:45:50 PM c:\pwworking\hmm\external\eron.sudhausen-arup.com\d0125352\FB-CT-2112-M.dgn

NOTES:
1. MINIMUM VERTICAL CLEARANCE OVER HST IS 27' FROM TOP OF RAIL
2. MINIMUM VERTICAL CLEARANCE OVER BNSF IS 24.0' FROM TOP OF RAIL

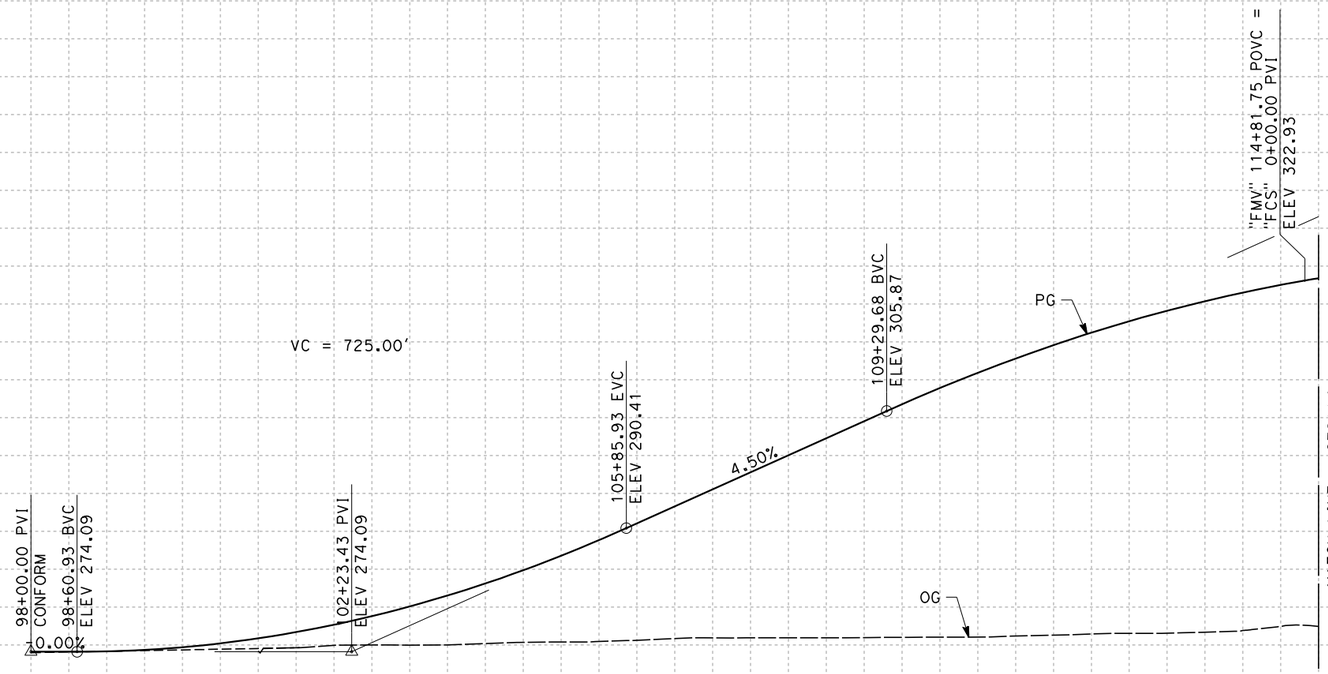


**PROFILE**
"FMV" LINE
SCALE: HORIZ 1"=100'
VERT 1"=10'

| STATION | | 8 | 9 | 100 | 1 | 2 | 3 | 4 | 105 | 6 | 7 | 8 | 9 | 110 | 1 | 2 | 3 | 4 | 115 | TOTAL |
|---|---|---|---|---|---|---|---|---|---|---|---|---|---|---|---|---|---|---|---|---|
| CY | Exc | | | | | | | | | | | | | | | | | | | |
| | Emb | | | | | | | | | | | | | | | | | | | |

| REV | DATE | BY | CHK | APP | DESCRIPTION |
|---|---|---|---|---|---|

DESIGNED BY A. CANNON
DRAWN BY E. SUDHAUSEN
CHECKED BY S. BROWN
IN CHARGE R. COFFIN
DATE 12/31/13

**RECORD SET 15% DESIGN SUBMISSION - NOT FOR CONSTRUCTION**

URS | HMM | ARUP
CALIFORNIA HIGH-SPEED TRAIN

CALIFORNIA HIGH-SPEED RAIL AUTHORITY

**CALIFORNIA HIGH-SPEED TRAIN PROJECT**
**FRESNO TO BAKERSFIELD**
MONMOUTH SUBSECTION
ALIGNMENT M
GRADE SEPARATION PROFILE
E MOUNTAIN VIEW AVE

CONTRACT NO. HSR 06-0003
DRAWING NO. CT2113
SCALE AS SHOWN
SHEET NO. 27 OF 32

04/02/2014 - RFP No.: HSR 13-57

eron.sudhausen 12/27/2013 2:47:40 PM c:\pwworking\hmm\external\eron.sudhausen-arup.com\d0125352\FB-CT-2113-M.dgn

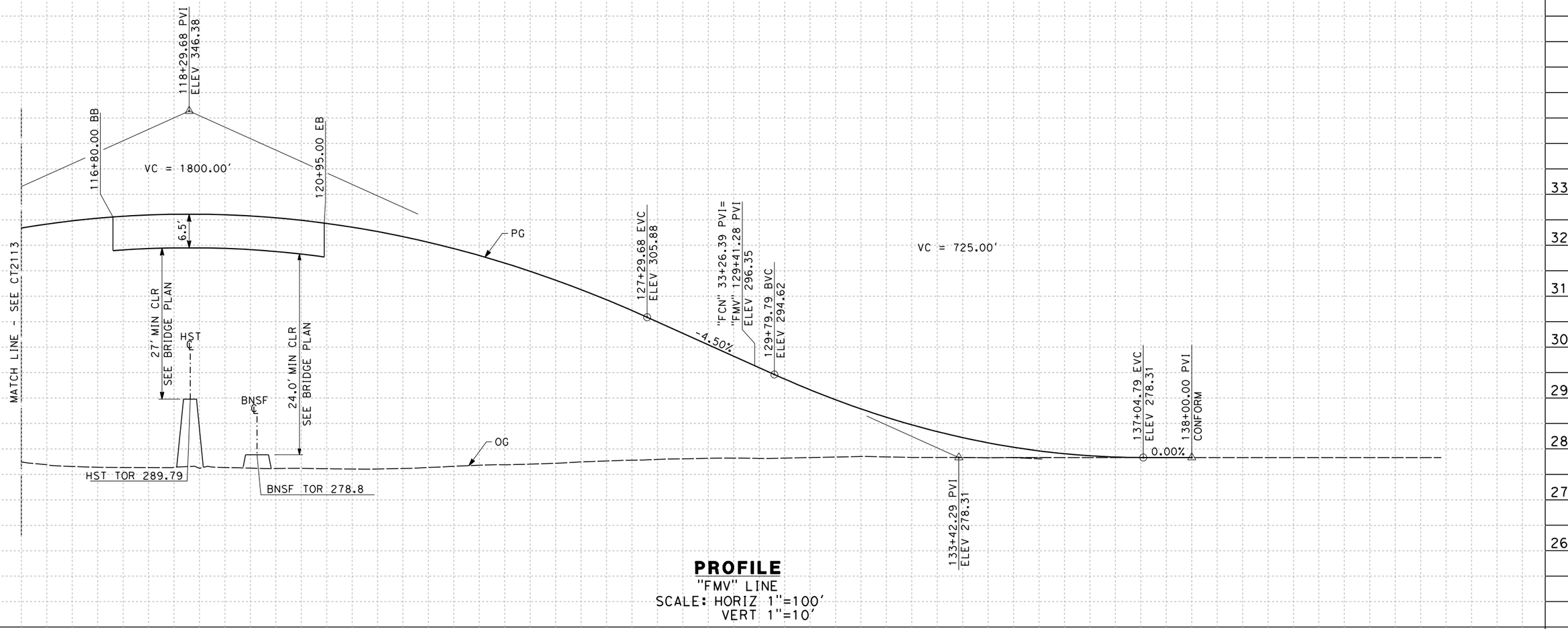


**PROFILE**
"FMV" LINE
SCALE: HORIZ 1"=100'
VERT 1"=10'

| STATION | 115 | 6 | 7 | 8 | 9 | 120 | 1 | 2 | 3 | 4 | 125 | 6 | 7 | 8 | 9 | 130 | 1 | 2 | 3 | 4 | 135 | 6 | 7 | 8 | 9 | 140 | 1 | 2 | 3 | 4 | TOTAL |
|---|---|---|---|---|---|---|---|---|---|---|---|---|---|---|---|---|---|---|---|---|---|---|---|---|---|---|---|---|---|---|---|
| CY Exc | | | | | | | | | | | | | | | | | | | | | | | | | | | | | | | |
| CY Emb | | | | | | | | | | | | | | | | | | | | | | | | | | | | | | | |

| REV | DATE | BY | CHK | APP | DESCRIPTION |
|---|---|---|---|---|---|

DESIGNED BY A. CANNON
DRAWN BY E. SUDHAUSEN
CHECKED BY S. BROWN
IN CHARGE R. COFFIN
DATE 12/31/13

**RECORD SET 15% DESIGN SUBMISSION - NOT FOR CONSTRUCTION**

URS | HMM | ARUP
CALIFORNIA HIGH-SPEED TRAIN

CALIFORNIA HIGH-SPEED RAIL AUTHORITY

**CALIFORNIA HIGH-SPEED TRAIN PROJECT**
**FRESNO TO BAKERSFIELD**
MONMOUTH SUBSECTION
ALIGNMENT M
GRADE SEPARATION PROFILE
E MOUNTAIN VIEW AVE

CONTRACT NO. HSR 06-0003
DRAWING NO. CT2114
SCALE AS SHOWN
SHEET NO. 28 OF 32

04/02/2014- RFP No.: HSR 13-57

c:\pwworking\hmm\external\eron.sudhausen-arup.com\d0125352\FB-CT-2114-M.dgn
12/27/2013 2:59:20 PM
eron.sudhausen

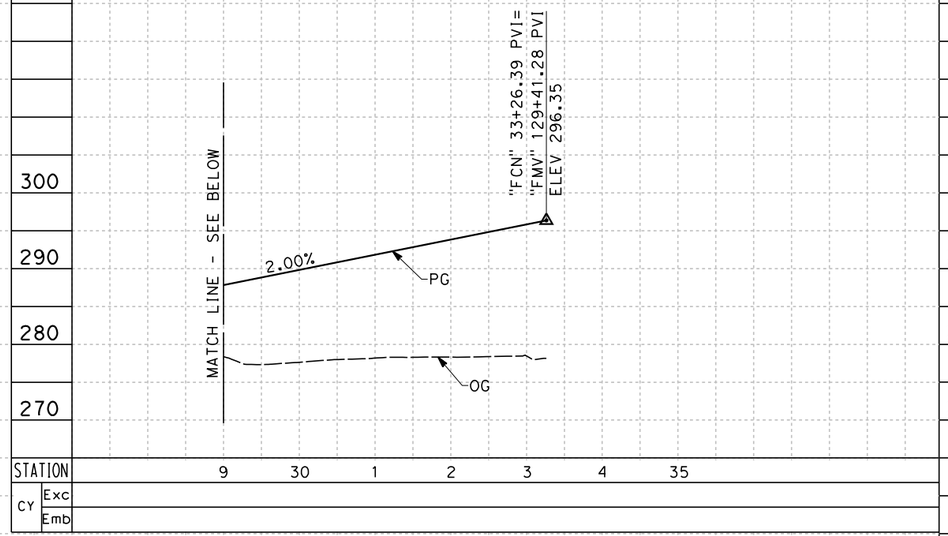


| STATION | | 9 | 30 | 1 | 2 | 3 | 4 | 35 |
|---|---|---|---|---|---|---|---|---|
| CY | Exc | | | | | | | |
| | Emb | | | | | | | |

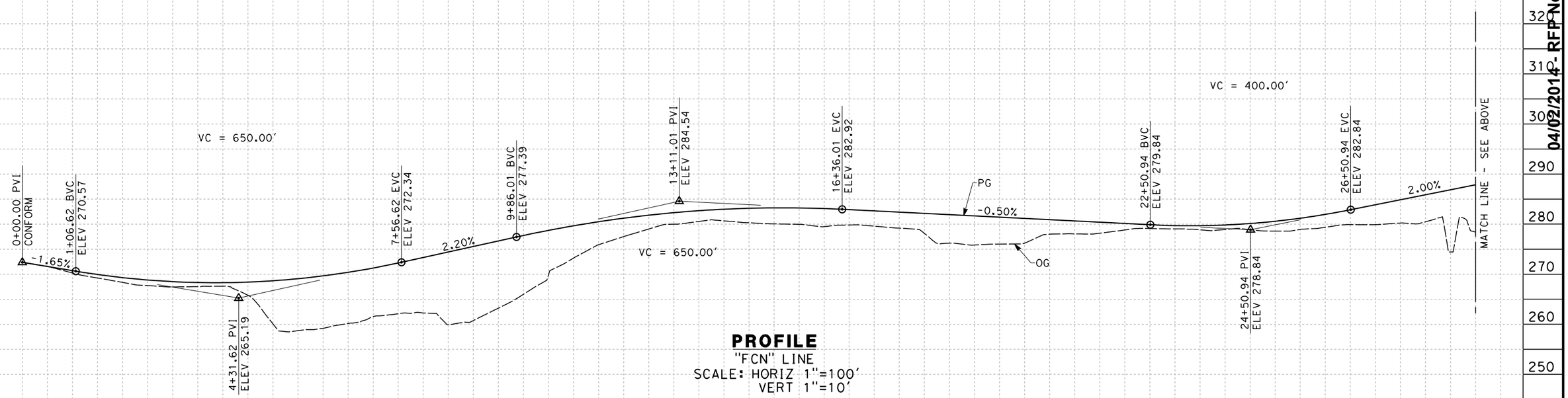


**PROFILE**
"FCN" LINE
SCALE: HORIZ 1"=100'
VERT 1"=10'

| STATION | | 0 | 1 | 2 | 3 | 4 | 5 | 6 | 7 | 8 | 9 | 10 | 1 | 2 | 3 | 4 | 15 | 6 | 7 | 8 | 9 | 20 | 1 | 2 | 3 | 4 | 25 | 6 | 7 | 8 | 9 | TOTAL |
|---|---|---|---|---|---|---|---|---|---|---|---|---|---|---|---|---|---|---|---|---|---|---|---|---|---|---|---|---|---|---|---|---|
| CY | Exc | | | | | | | | | | | | | | | | | | | | | | | | | | | | | | | |
| | Emb | | | | | | | | | | | | | | | | | | | | | | | | | | | | | | | |

| REV | DATE | BY | CHK | APP | DESCRIPTION |
|---|---|---|---|---|---|

DESIGNED BY A. CANNON
DRAWN BY E. SUDHAUSEN
CHECKED BY S. BROWN
IN CHARGE R. COFFIN
DATE 12/31/13

**RECORD SET 15% DESIGN SUBMISSION - NOT FOR CONSTRUCTION**

URS | HMM | ARUP
CALIFORNIA HIGH-SPEED TRAIN

CALIFORNIA
HIGH-SPEED RAIL AUTHORITY

**CALIFORNIA HIGH-SPEED TRAIN PROJECT**
**FRESNO TO BAKERSFIELD**
MONMOUTH SUBSECTION
ALIGNMENT M
ROADWAY PROFILE
S CHESTNUT AVE (NORTH)

CONTRACT NO. HSR 06-0003
DRAWING NO. CT2115
SCALE AS SHOWN
SHEET NO. 29 OF 32

04/02/2014 - RFP No.: HSR 13-57

c:\pwworking\hmm\external\eron.sudhausen-arup.com\d0125352\FB-CT-2115-M.dgn 12/27/2013 3:00:54 PM eron.sudhausen

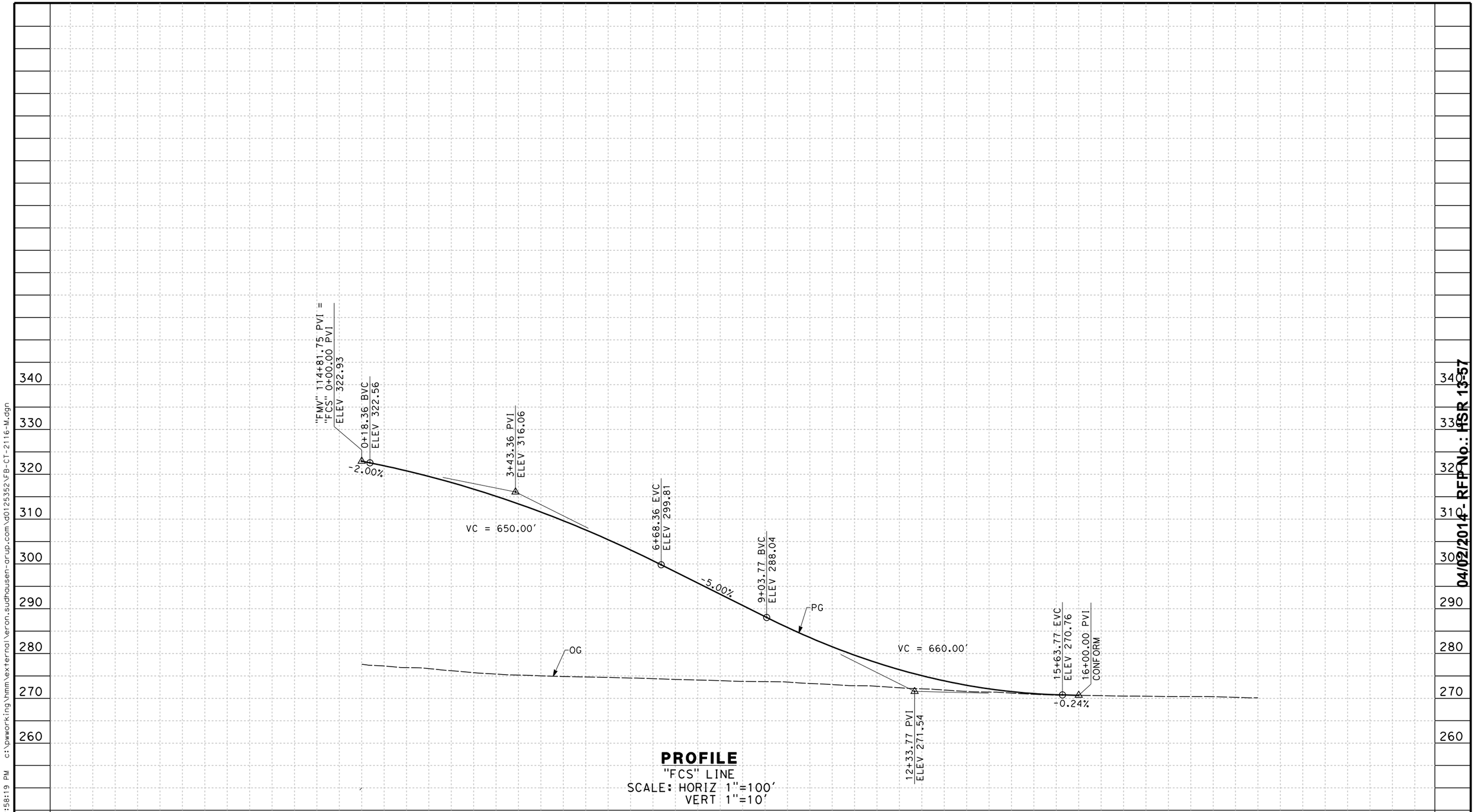


## PROFILE

"FCS" LINE
SCALE: HORIZ 1"=100'
VERT 1"=10'

| REV | DATE | BY | CHK | APP | DESCRIPTION |
|---|---|---|---|---|---|

DESIGNED BY A. CANNON
DRAWN BY E. SUDHAUSEN
CHECKED BY S. BROWN
IN CHARGE R. COFFIN
DATE 12/31/13

**RECORD SET 15% DESIGN SUBMISSION - NOT FOR CONSTRUCTION**

URS | HMM | ARUP
CALIFORNIA HIGH-SPEED TRAIN

CALIFORNIA HIGH-SPEED RAIL AUTHORITY

**CALIFORNIA HIGH-SPEED TRAIN PROJECT**
**FRESNO TO BAKERSFIELD**
MONMOUTH SUBSECTION
ALIGNMENT M
ROADWAY PROFILE
S CHESTNUT AVE (SOUTH)

CONTRACT NO. HSR 06-0003
DRAWING NO. CT2116
SCALE AS SHOWN
SHEET NO. 30 OF 32

04/02/2014 - RFP No.: HSR 13-57

eron.sudhausen 12/27/2013 2:58:19 PM c:\pwworking\hmm\external\eron.sudhausen-arup.com\d0125352\FB-CT-2116-M.dgn

NOTES:

1. SUPERELEVATION AS SHOWN OR AS DIRECTED BY THE ENGINEER.
2. PAVEMENT SECTIONS ARE SHOWN FOR INFORMATIONAL PURPOSES ONLY. EXACT DIMENSION AND MATERIAL OF THE PAVEMENT SECTION TO BE CONFIRMED.

## STRUCTURAL SECTIONS
## TYPICAL ROADWAY

[1] 0.60' HMA (TYPE A)
1.50' CL2 AB

TABLE OF DESIGN SPEEDS

| STREET NAME | ALIGNMENT DESIGNATION | DESIGN SPEED | CRITERIA/JURISDICTION |
|---|---|---|---|
| E LINCOLN AVE | FLI | 55 | AASHTO/FRESNO COUNTY |
| S MAPLE AVE AT E LINCOLN AVE | FLIM | 55 | AASHTO/FRESNO COUNTY |
| S CEDAR AVE AT E LINCOLN AVE | FLIC | 55 | AASHTO/FRESNO COUNTY |
| E ADAMS AVE | FAD | 55 | AASHTO/FRESNO COUNTY |
| S MAPLE AVE AT E ADAMS AVE | FADM | 55 | AASHTO/FRESNO COUNTY |
| S CEDAR AVE AT E ADAMS AVE | FADC | 55 | AASHTO/FRESNO COUNTY |
| E SOUTH AVE | FSO | 55 | AASHTO/FRESNO COUNTY |
| S MAPLE AVE AT E SOUTH AVE | FSOM | 55 | AASHTO/FRESNO COUNTY |
| S CEDAR AVE AT E SOUTH AVE | FSOC | 55 | AASHTO/FRESNO COUNTY |
| E MANNING AVE | FMN | 55 | AASHTO/FRESNO COUNTY |
| S MAPLE AVE AT E MANNING AVE | FMM | 55 | AASHTO/FRESNO COUNTY |
| E FLORAL AVE | FFL | 65 | AASHTO/FRESNO COUNTY |
| E NEBRASKA AVE | FNE | 65 | AASHTO/FRESNO COUNTY |
| S CHESTNUT AVE AT E NEBRASKA AVE | NCN | 65 | AASHTO/FRESNO COUNTY |
| E MOUNTAIN VIEW AVE | FMV | 65 | AASHTO/FRESNO COUNTY |
| S CHESTNUT AVE | FCN/FCS | 65/55 | AASHTO/FRESNO COUNTY |

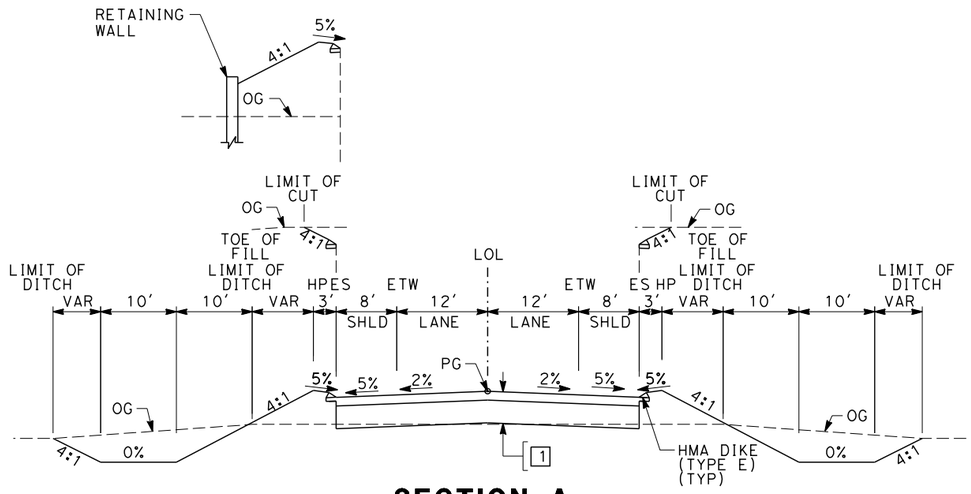


## SECTION A

"FLI" 10+00.00 TO 20+28.25
"FLI" 24+68.25 TO 36+00.00
"FAD" 12+50.00 TO 20+79.35
"FAD" 24+59.35 TO 36+00.00
"FNE" 10+00.00 TO 30+55.00
"FNE" 34+60.00 TO 43+50.00
"FMV" 102+00.00 TO 116+80.00
"FMV" 120+95.00 TO 133+30.00
"FCN" 28+50.00 TO 33+26.39
"FCS" 0+00.00 TO 13+00.00
"FMN" 104+00.00 TO 109+00.00
"FMN" 123+41.50 TO 130+00.00
"FFL" 7+00.00 TO 21+45.00
"FFL" 25+75.00 TO 37+00.00

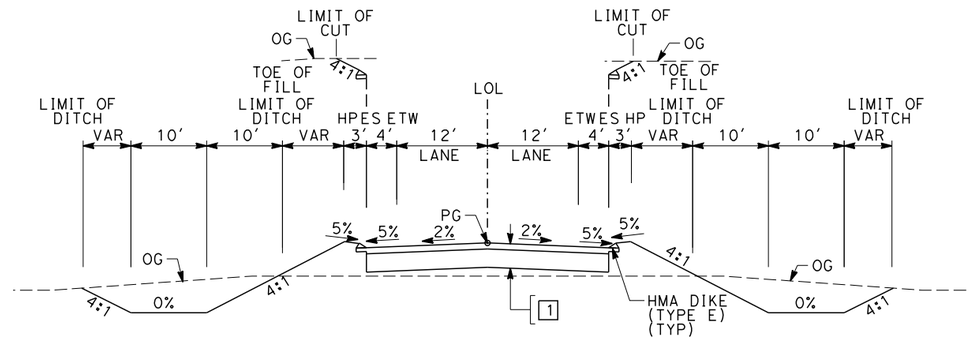


## SECTION B

"FSO" 14+00.00 TO 22+67.50
"FSO" 26+42.50 TO 38+00.00

04/02/2014 - RFP No.: HSR 13-57

$FILE$ $TIME$ $DATE$ $USER$

| REV | DATE | BY | CHK | APP | DESCRIPTION |
|---|---|---|---|---|---|

DESIGNED BY A. CANNON
DRAWN BY E. SUDHAUSEN
CHECKED BY S. BROWN
IN CHARGE R. COFFIN
DATE 12/31/13

RECORD SET 15% DESIGN SUBMISSION - NOT FOR CONSTRUCTION

URS | HMM | ARUP
CALIFORNIA HIGH-SPEED TRAIN

CALIFORNIA HIGH-SPEED RAIL AUTHORITY

**CALIFORNIA HIGH-SPEED TRAIN PROJECT**
**FRESNO TO BAKERSFIELD**
MONMOUTH SUBSECTION
ALIGNMENT M
ROADWAY / GRADE SEPARATION
TYPICAL CROSS SECTIONS

CONTRACT NO. HSR 06-0003
DRAWING NO. CT3010
SCALE NO SCALE
SHEET NO. 31 OF 32

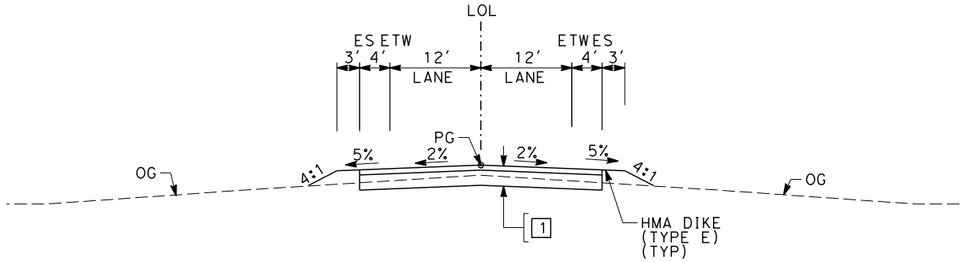


## SECTION C

| | | | | | |
|---|---|---|---|---|---|
| "NCN" | 12+00.00 | TO 30+00.00 | "FSO" | 8+50.00 | TO 14+00.00 |
| "FLIM" | 2+00.00 | TO 12+50.00 | "FSO" | 38+00.00 | TO 41+00.00 |
| "FADM" | 2+00.00 | TO 13+00.00 | "FFL" | 3+00.00 | TO 7+00.00 |
| "FMM" | 3+00.00 | TO 13+00.00 | "FFL" | 37+00.00 | TO 42+00.00 |
| "FSOM" | 6+00.00 | TO 16+50.00 | | | |

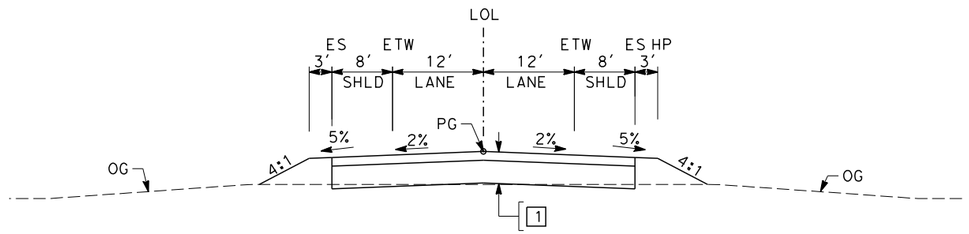


## SECTION E

| | | | | | |
|---|---|---|---|---|---|
| "FADC" | 4+00.00 | TO 13+00.00 | "FMN" | 130+00.00 | TO 135+00.00 |
| "FSOC" | 7+00.00 | TO 14+00.00 | "FNE" | 7+00.00 | TO 10+00.00 |
| "FLIC" | 17+00.00 | TO 23+50.00 | "FNE" | 43+50.00 | TO 51+60.00 |
| "FLI" | 7+50.00 | TO 10+00.00 | "FMV" | 98+00.00 | TO 102+00.00 |
| "FLI" | 36+00.00 | TO 39+00.00 | "FMV" | 133+30.00 | TO 138+00.00 |
| "FAD" | 7+50.00 | TO 12+50.00 | "FCS" | 13+00.00 | TO 16+00.00 |
| "FAD" | 36+00.00 | TO 39+00.00 | "FCN" | 00+00.00 | TO 28+50.00 |

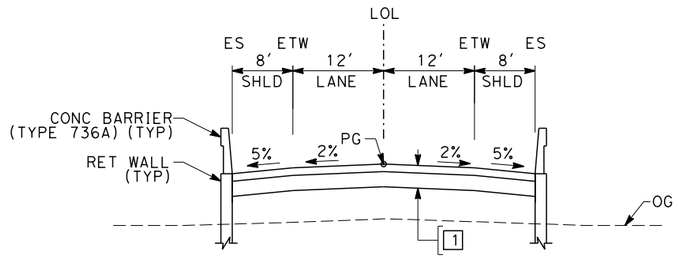


## SECTION D

"FMN" 109+00.00 TO 113+96.50

04/02/2014 - RFP No.: HSR 13-57

$USER$ $DATE$ $TIME$ $FILE$

| REV | DATE | BY | CHK | APP | DESCRIPTION |
|---|---|---|---|---|---|

DESIGNED BY A. CANNON
DRAWN BY E. SUDHAUSEN
CHECKED BY S. BROWN
IN CHARGE R. COFFIN
DATE 12/31/13

**RECORD SET 15% DESIGN SUBMISSION - NOT FOR CONSTRUCTION**

URS | HMM | ARUP
CALIFORNIA HIGH-SPEED TRAIN

CALIFORNIA
HIGH-SPEED RAIL AUTHORITY

**CALIFORNIA HIGH-SPEED TRAIN PROJECT**
**FRESNO TO BAKERSFIELD**
MONMOUTH SUBSECTION
ALIGNMENT M
ROADWAY / GRADE SEPARATION
TYPICAL CROSS SECTIONS

CONTRACT NO. HSR 06-0003
DRAWING NO. CT3011
SCALE NO SCALE
SHEET NO. 32 OF 32

## STREET CLOSURE

| STREET NAME | HST ALIGNMENT STA | LOCAL STANDARD |
|---|---|---|
| E CLARKSON AVE | 1180+25.00 | FRESNO COUNTY |
| S MINNEWAWA AVE | 1198+00.00 | FRESNO COUNTY |

| REV | DATE | BY | CHK | APP | DESCRIPTION |
|---|---|---|---|---|---|
| | | | | | |

DESIGNED BY A. CANNON
DRAWN BY E. SUDHAUSEN
CHECKED BY S. BROWN
IN CHARGE R. COFFIN
DATE 12/31/13

**RECORD SET 15% DESIGN SUBMISSION - NOT FOR CONSTRUCTION**

URS | HMM | ARUP
CALIFORNIA HIGH-SPEED TRAIN

CALIFORNIA
HIGH-SPEED RAIL AUTHORITY

# CALIFORNIA HIGH-SPEED TRAIN PROJECT
# FRESNO TO BAKERSFIELD
HANFORD SUBSECTION
ALIGNMENT H
ROADWAY / GRADE SEPARATION
KEY MAP

CONTRACT NO. HSR 06-0003
DRAWING NO. CB0055
SCALE AS SHOWN
SHEET NO. 1 OF 60

04/02/2014 - RFP No.: HSR 13-57

12/27/2013 4:00:24 PM c:\pwworking\hmm\external\eron.sudhausen-arup.com\d0125341\VFB-CB-0055-H.dgn
eron.sudhausen

## LINE DATA

| NO. | BEARING | DISTANCE |
|---|---|---|
| 1 | S00°31'37"W | 284.71' |
| 2 | S49°19'59"W | 1139.17' |

## CURVE DATA

| NO. | R | Δ | T | L |
|---|---|---|---|---|
| (1) | 1700.00' | 48°48'22" | 771.26' | 1448.11' |

04/02/2014 - RFP No.: HSR 13-57

| REV | DATE | BY | CHK | APP | DESCRIPTION |
|---|---|---|---|---|---|
| | | | | | |

DESIGNED BY A. CANNON
DRAWN BY E. SUDHAUSEN
CHECKED BY S. BROWN
IN CHARGE R. COFFIN
DATE 12/31/13

**RECORD SET 15% DESIGN SUBMISSION - NOT FOR CONSTRUCTION**

URS | HMM | ARUP
CALIFORNIA HIGH-SPEED TRAIN

CALIFORNIA HIGH-SPEED RAIL AUTHORITY

# CALIFORNIA HIGH-SPEED TRAIN PROJECT
# FRESNO TO BAKERSFIELD
HANFORD SUBSECTION
ALIGNMENT H
GRADE SEPARATION LAYOUT
S CLOVIS AVE

CONTRACT NO. HST 06-0003
DRAWING NO. CT1117
SCALE AS SHOWN
SHEET NO. 2 OF 60

alton.cannon 12/24/2013 10:06:17 AM c:\pwworking\hmm\external\alton.cannon-arup.com\d0125341\FB-CT-1117-H.dgn

## LINE DATA

| NO. | BEARING | DISTANCE |
|---|---|---|
| 3 | S02°32'24"W | 239.63' |

## CURVE DATA

| NO. | R | Δ | T | L |
|---|---|---|---|---|
| ② | 1700.00' | 46°47'36" | 735.54' | 1388.38' |

04/02/2014 - RFP No.: HSR 13-57

| REV | DATE | BY | CHK | APP | DESCRIPTION |
|---|---|---|---|---|---|
| | | | | | |

DESIGNED BY A. CANNON
DRAWN BY E. SUDHAUSEN
CHECKED BY S. BROWN
IN CHARGE R. COFFIN
DATE 12/31/13

**RECORD SET 15% DESIGN SUBMISSION - NOT FOR CONSTRUCTION**

URS | HMM | ARUP
California High-Speed Train

CALIFORNIA HIGH-SPEED RAIL AUTHORITY

# CALIFORNIA HIGH-SPEED TRAIN PROJECT
# FRESNO TO BAKERSFIELD
HANFORD SUBSECTION
ALIGNMENT H
GRADE SEPARATION LAYOUT
S CLOVIS AVE

CONTRACT NO. HSR 06-0003
DRAWING NO. CT1118
SCALE AS SHOWN
SHEET NO. 3 OF 60

$USER$ $DATE$ $TIME$ $FILE$

LINE DATA

| NO. | BEARING | DISTANCE |
|---|---|---|
| 1 | S89°22'57"E | 4200.00' |

04/02/2014 - RFP No.: HSR 13-57

12/24/2013 10:08:14 AM c:\pwworking\hmm\external\alton.cannon-arup.com\d0125341\VFB-CT-1119-H.dgn alton.cannon

| REV | DATE | BY | CHK | APP | DESCRIPTION |
|---|---|---|---|---|---|

DESIGNED BY: A. CANNON
DRAWN BY: E. SUDHAUSEN
CHECKED BY: S. BROWN
IN CHARGE: R. COFFIN
DATE: 12/31/13

RECORD SET 15% DESIGN SUBMISSION - NOT FOR CONSTRUCTION

URS | HMM | ARUP
CALIFORNIA HIGH-SPEED TRAIN

CALIFORNIA HIGH-SPEED RAIL AUTHORITY

# CALIFORNIA HIGH-SPEED TRAIN PROJECT
# FRESNO TO BAKERSFIELD
HANFORD SUBSECTION
ALIGNMENT H
GRADE SEPARATION LAYOUT
E ELKHORN AVE

CONTRACT NO.: HST 06-0003
DRAWING NO.: CT1119
SCALE: AS SHOWN
SHEET NO.: 4 OF 60

## LINE DATA

| NO. | BEARING | DISTANCE |
|---|---|---|
| 1 | S89°22'57"E | 4200.00' |

CONFORM
LIMIT OF DITCH
TOE OF FILL
ACCESS ROAD
ROADWAY ROW
LIMIT OF DITCH
R=20'
"FEL" 39+00.00
CONFORM
"FEL" 43+00.00 PI
"FEL" LINE
40'
MATCH LINE - SEE CT1119
EP
DRAINAGE DITCH (TYP)
ROADWAY ROW
LIMIT OF DITCH
TOE OF FILL
LIMIT OF DITCH
E ELKHORN AVE
S FOWLER AVE
REMOVE BASE
AND SURFACING
100 0 100 200
SCALE: 1"=100'

04/02/2014 - RFP No.: HSR 13-57

| REV | DATE | BY | CHK | APP | DESCRIPTION |
|---|---|---|---|---|---|

DESIGNED BY A. CANNON
DRAWN BY E. SUDHAUSEN
CHECKED BY S. BROWN
IN CHARGE R. COFFIN
DATE 12/31/13

**RECORD SET 15% DESIGN SUBMISSION - NOT FOR CONSTRUCTION**

URS | HMM | ARUP
CALIFORNIA HIGH-SPEED TRAIN

CALIFORNIA
HIGH-SPEED RAIL AUTHORITY

# CALIFORNIA HIGH-SPEED TRAIN PROJECT
# FRESNO TO BAKERSFIELD
HANFORD SUBSECTION
ALIGNMENT H
GRADE SEPARATION LAYOUT
E ELKHORN AVE

CONTRACT NO. HSR 06-0003
DRAWING NO. CT1120
SCALE AS SHOWN
SHEET NO. 5 OF 60

alton.cannon 12/24/2013 10:09:23 AM c:\pwworking\hmm\external\alton.cannon-arup.com\d0125341\FB-CT-1120-H.dgn

## LINE DATA

| NO. | BEARING | DISTANCE |
|---|---|---|
| 1 | S00°00'00"E | 262.68' |
| 2 | S37°07'55"W | 2434.51' |

## CURVE DATA

| NO. | R | Δ | T | L |
|---|---|---|---|---|
| (1) | 1700.00' | 37°07'55" | 570.99' | 1101.73' |

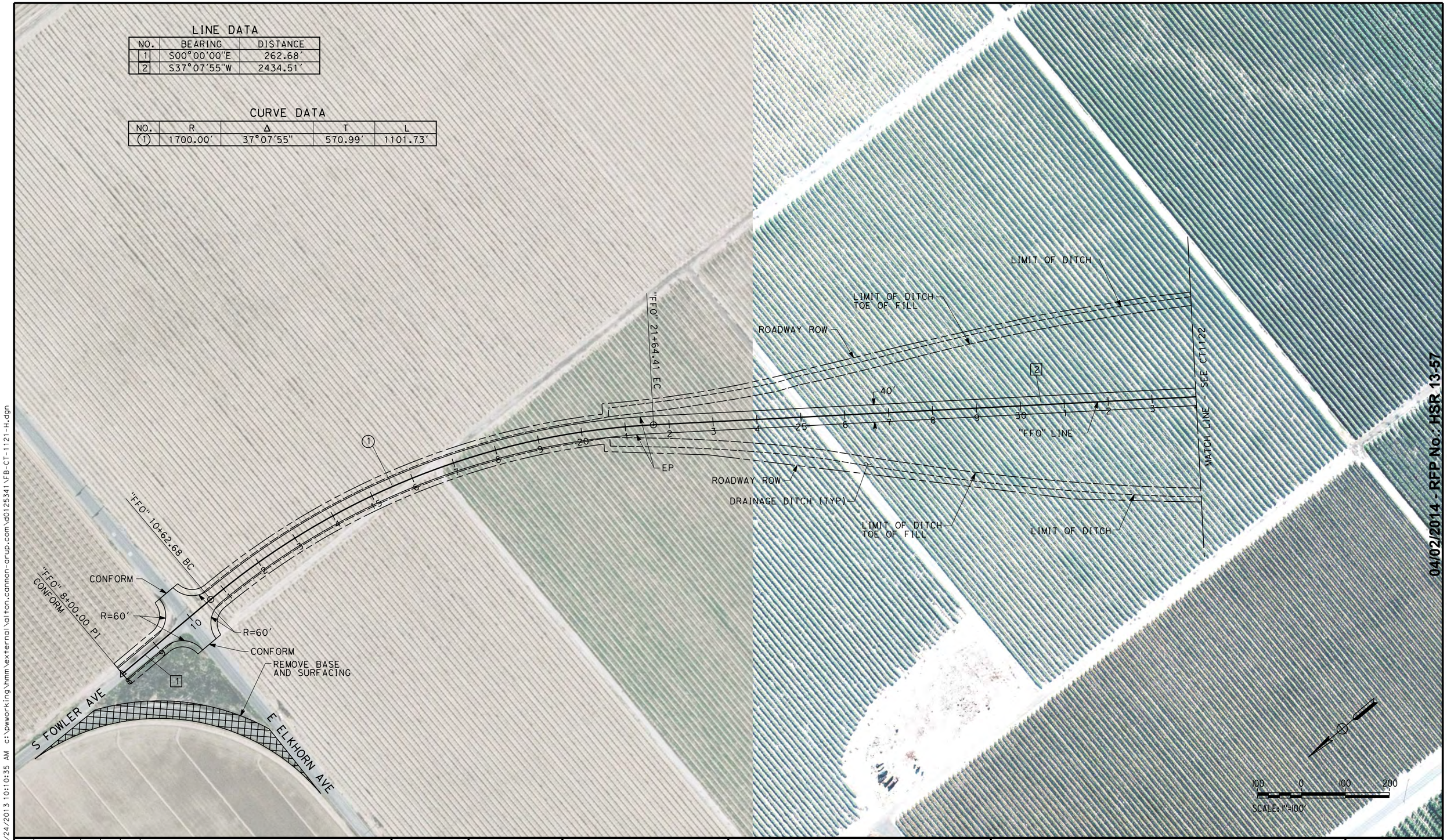


04/02/2014 - RFP No.: HSR 13-57

| REV | DATE | BY | CHK | APP | DESCRIPTION |
|---|---|---|---|---|---|

DESIGNED BY A. CANNON
DRAWN BY E. SUDHAUSEN
CHECKED BY S. BROWN
IN CHARGE R. COFFIN
DATE 12/31/13

**RECORD SET 15% DESIGN SUBMISSION - NOT FOR CONSTRUCTION**

URS | HMM | ARUP
CALIFORNIA HIGH-SPEED TRAIN

CALIFORNIA HIGH-SPEED RAIL AUTHORITY

# CALIFORNIA HIGH-SPEED TRAIN PROJECT
# FRESNO TO BAKERSFIELD

HANFORD SUBSECTION
ALIGNMENT H
GRADE SEPARATION LAYOUT
S FOWLER AVE

CONTRACT NO. HSR 06-0003
DRAWING NO. CT1121
SCALE AS SHOWN
SHEET NO. 6 OF 60

alton.cannon 12/24/2013 10:10:35 AM c:\pwworking\hmm\external\alton.cannon-arup.com\d0125341\FB-CT-1121-H.dgn

## LINE DATA

| NO. | BEARING | DISTANCE |
|---|---|---|
| 2 | S37°07'55"W | 2434.51' |
| 3 | S01°53'22"W | 255.41' |

## CURVE DATA

| NO. | R | Δ | T | L |
|---|---|---|---|---|
| (2) | 1700.00' | 35°14'34" | 539.97' | 1045.67' |

"H" LINE

"H" 1225+00.00

HST ROW

"FFO" 37+35.91 POT = "H" 1289+37.98 POC

ROADWAY ROW

LIMIT OF DITCH

LIMIT OF DITCH TOE OF FILL

DRAINAGE DITCH (TYP)

"FFO" 45+98.92 BC

LIMIT OF DITCH TOE OF FILL

LIMIT OF DITCH

ROADWAY ROW

"FFO" LINE

BB

EB

40'

EP

MBGR (TYP)

MATCH LINE - SEE CT1121

"H" 1290+00

LIMIT OF DITCH TOE OF FILL

LIMIT OF DITCH

ROADWAY ROW

"H" 1285+00

ROADWAY ROW

LIMIT OF DITCH

LIMIT OF DITCH TOE OF FILL

REMOVE BASE AND SURFACING

"FFO" 59+00.00 PI CONFORM

"FFO" 56+44.59 EC

S FOWLER AVE

100 0 100 200

SCALE: 1"=100'

04/02/2014 - RFP No.: HSR 13-57

| REV | DATE | BY | CHK | APP | DESCRIPTION |
|---|---|---|---|---|---|

DESIGNED BY A. CANNON
DRAWN BY E. SUDHAUSEN
CHECKED BY S. BROWN
IN CHARGE R. COFFIN
DATE 12/31/13

**RECORD SET 15% DESIGN SUBMISSION - NOT FOR CONSTRUCTION**

URS | HMM | ARUP
CALIFORNIA HIGH-SPEED TRAIN

CALIFORNIA
HIGH-SPEED RAIL AUTHORITY

**CALIFORNIA HIGH-SPEED TRAIN PROJECT**
**FRESNO TO BAKERSFIELD**
HANFORD SUBSECTION
ALIGNMENT H
GRADE SEPARATION LAYOUT
S FOWLER AVE

CONTRACT NO. HST 06-0003
DRAWING NO. CT1122
SCALE AS SHOWN
SHEET NO. 7 OF 60

eron.sudhausen 12/27/2013 4:05:51 PM c:\pwworking\hmm\external\eron.sudhausen-arup.com\d0125341\FB-CT-1122-H.dgn

## LINE DATA

| NO. | BEARING | DISTANCE |
|---|---|---|
| 1 | S89°31'12"E | 4000.00' |

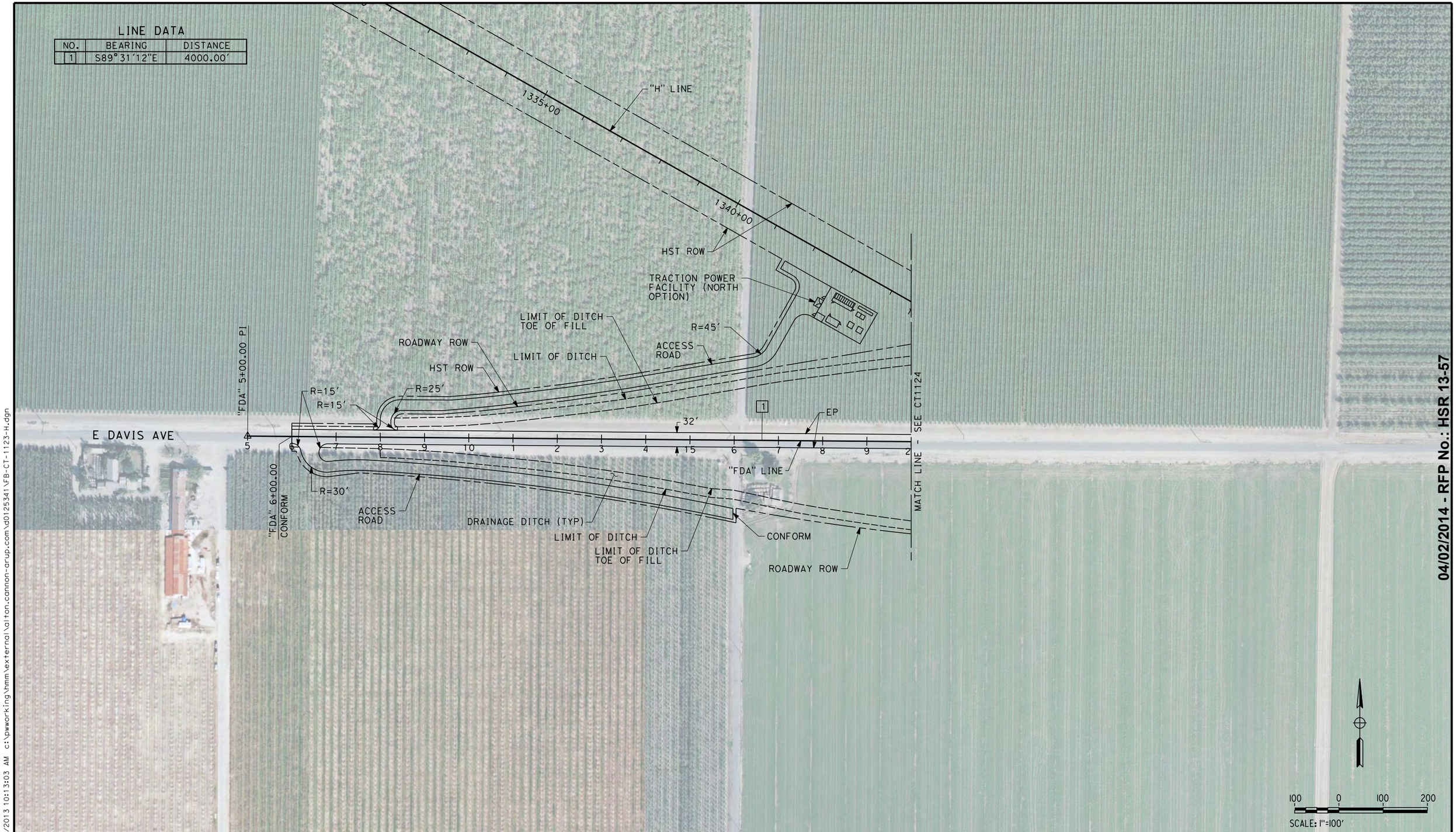


04/02/2014 - RFP No.: HSR 13-57

| REV | DATE | BY | CHK | APP | DESCRIPTION |
|---|---|---|---|---|---|

DESIGNED BY A. CANNON
DRAWN BY E. SUDHAUSEN
CHECKED BY S. BROWN
IN CHARGE R. COFFIN
DATE 12/31/13

**RECORD SET 15% DESIGN SUBMISSION - NOT FOR CONSTRUCTION**

URS | HMM | ARUP
CALIFORNIA HIGH-SPEED TRAIN

CALIFORNIA
HIGH-SPEED RAIL AUTHORITY

# CALIFORNIA HIGH-SPEED TRAIN PROJECT FRESNO TO BAKERSFIELD

HANFORD SUBSECTION
ALIGNMENT H
GRADE SEPARATION LAYOUT
E DAVIS AVE

CONTRACT NO. HST 06-0003
DRAWING NO. CT1123
SCALE AS SHOWN
SHEET NO. 8 OF 60

alton.cannon 12/24/2013 10:13:03 AM c:\pwworking\hmm\external\alton.cannon-arup.com\d0125341\FB-CT-1123-H.dgn

## LINE DATA

| NO. | BEARING | DISTANCE |
|---|---|---|
| 1 | S89°31'12"E | 4000.00' |

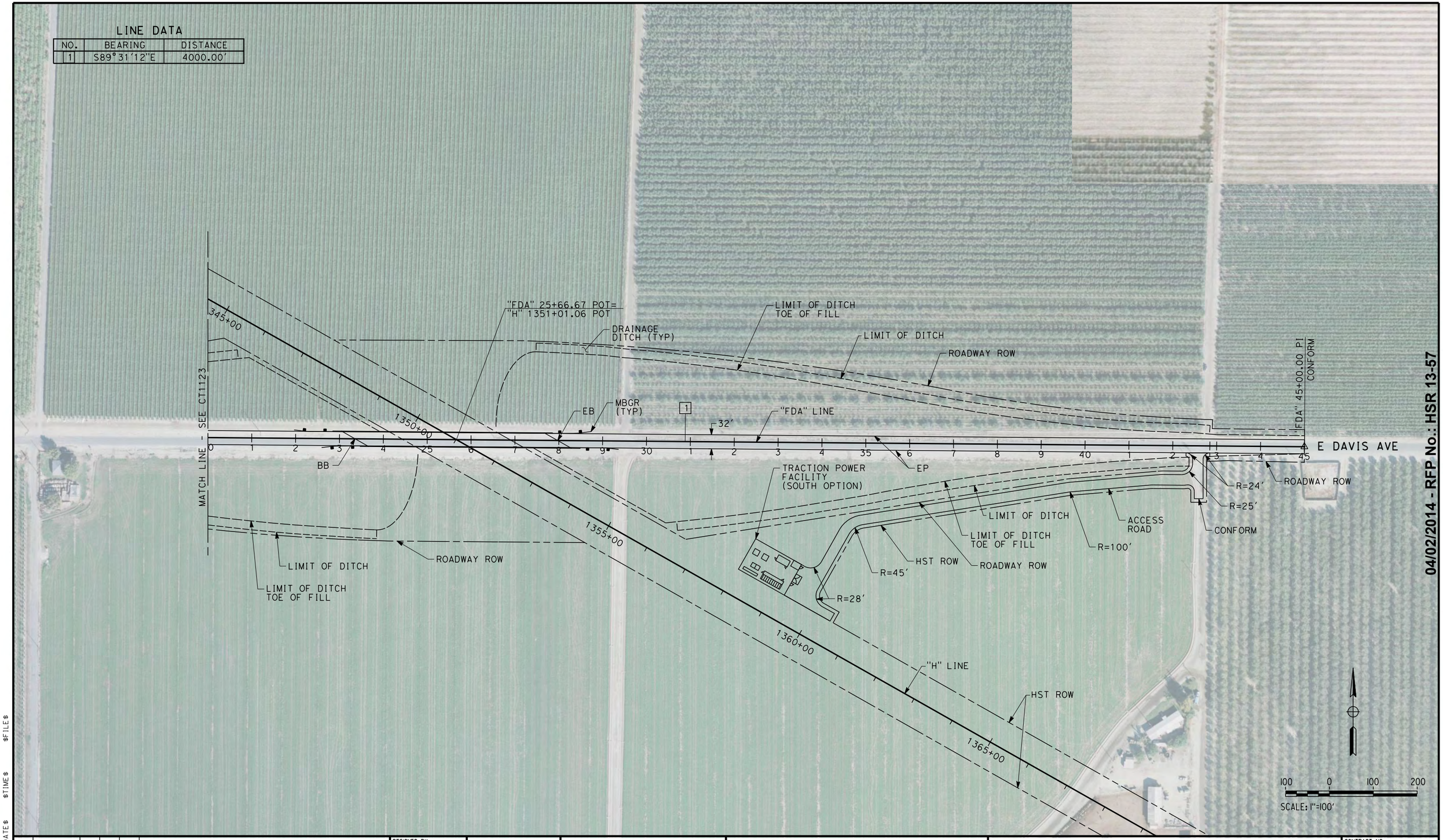


04/02/2014 - RFP No.: HSR 13-57

| REV | DATE | BY | CHK | APP | DESCRIPTION |
|---|---|---|---|---|---|

DESIGNED BY: A. CANNON
DRAWN BY: E. SUDHAUSEN
CHECKED BY: S. BROWN
IN CHARGE: R. COFFIN
DATE: 12/31/13

**RECORD SET 15% DESIGN SUBMISSION - NOT FOR CONSTRUCTION**

URS | HMM | ARUP
CALIFORNIA HIGH-SPEED TRAIN

CALIFORNIA
HIGH-SPEED RAIL AUTHORITY

# CALIFORNIA HIGH-SPEED TRAIN PROJECT
# FRESNO TO BAKERSFIELD
HANFORD SUBSECTION
ALIGNMENT H
GRADE SEPARATION LAYOUT
E DAVIS AVE

CONTRACT NO. HSR 06-0003
DRAWING NO. CT1124
SCALE AS SHOWN
SHEET NO. 9 OF 60

$USER$ $DATE$ $TIME$ $FILE$

## LINE DATA

| NO. | BEARING | DISTANCE |
|---|---|---|
| 1 | S89°47'26"E | 3600.00' |
| 2 | S00°21'19"W | 1600.00' |
| 5 | S 0°12'34"W | 244.41' |

## CURVE DATA

| NO. | R | Δ | T | L |
|---|---|---|---|---|
| (2) | 700.00' | 45°34'21" | 294.06' | 556.77' |

LIMIT OF DITCH TOE OF FILL
ROADWAY ROW
LIMIT OF DITCH
MATCH LINE - SEE CT1132
"K8N" LINE
ROADWAY ROW
LIMIT OF DITCH
LIMIT OF DITCH TOE OF FILL
MATCH LINE - SEE CT1132
REMOVE BASE AND SURFACING (TYP)
1650+00
"KDO" 28+02.35 POT= "H" 1654+01.38 POC
"K8N" 32+29.17 EC
LIMIT OF DITCH
ROADWAY ROW
LIMIT OF DITCH TOE OF FILL
DRAINAGE DITCH (TYP)
"KDO" 10+00.00 PI CONFORM
"KDO" LINE
32'
1
"KDO" 23+95.00 POT
"K8S" 10+00.00 PI
40'
R=60'
R=60'
32'
5
MATCH LINE - SEE CT1131
DOVER AVE
R=60'
LIMIT OF DITCH TOE OF FILL
ROADWAY ROW
LIMIT OF DITCH
8TH AVE
2
32'
MBGR (TYP)
BB
1655+00
EB
EP
"KDO" 31+50.00 POT= "K8N" 34+73.58 PI
MATCH LINE - SEE CT1133
"K8S" LINE
LIMIT OF DITCH TOE OF FILL
LIMIT OF DITCH
ROADWAY ROW
LIMIT OF DITCH TOE OF FILL
LIMIT OF DITCH
ROADWAY ROW
HST ROW
1660+00
"H" LINE
100 0 100 200
SCALE: 1"=100'

04/02/2014 - RFP No.: HSR 13-57

$FILE$ $TIME$ $DATE$ $USER$

| REV | DATE | BY | CHK | APP | DESCRIPTION |
|---|---|---|---|---|---|

DESIGNED BY A. CANNON
DRAWN BY E. SUDHAUSEN
CHECKED BY S. BROWN
IN CHARGE R. COFFIN
DATE 12/31/13

**RECORD SET 15% DESIGN SUBMISSION - NOT FOR CONSTRUCTION**

URS | HMM | ARUP
CALIFORNIA HIGH-SPEED TRAIN

CALIFORNIA HIGH-SPEED RAIL AUTHORITY

# CALIFORNIA HIGH-SPEED TRAIN PROJECT
# FRESNO TO BAKERSFIELD
HANFORD SUBSECTION
ALIGNMENT H
GRADE SEPARATION LAYOUT
DOVER AVE

CONTRACT NO. HST 06-0003
DRAWING NO. CT1130
SCALE AS SHOWN
SHEET NO. 10 OF 60

LINE DATA

| NO. | BEARING | DISTANCE |
|---|---|---|
| 1 | S89°47'26"E | 3600.00' |

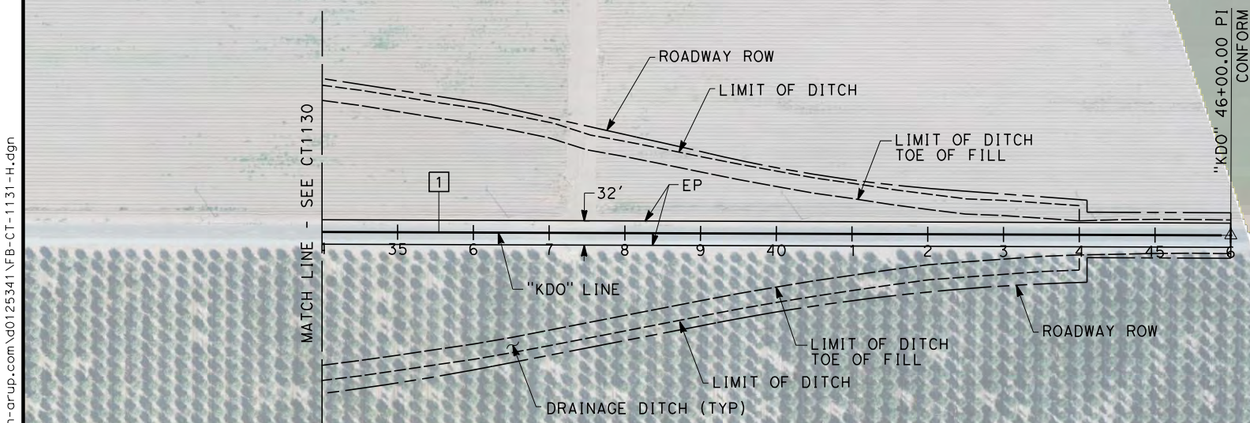


"KDO" 46+00.00 PI CONFORM

DOVER AVE

100 0 100 200

SCALE: 1"=100'

04/02/2014 - RFP No.: HSR 13-57

| REV | DATE | BY | CHK | APP | DESCRIPTION |
|---|---|---|---|---|---|

DESIGNED BY A. CANNON
DRAWN BY E. SUDHAUSEN
CHECKED BY S. BROWN
IN CHARGE R. COFFIN
DATE 12/31/13

**RECORD SET 15% DESIGN SUBMISSION - NOT FOR CONSTRUCTION**

URS | HMM | ARUP
California High-Speed Train

CALIFORNIA HIGH-SPEED RAIL AUTHORITY

# CALIFORNIA HIGH-SPEED TRAIN PROJECT
# FRESNO TO BAKERSFIELD

HANFORD SUBSECTION
ALIGNMENT H
GRADE SEPARATION LAYOUT
DOVER AVE

CONTRACT NO. HST 06-0003
DRAWING NO. CT1131
SCALE AS SHOWN
SHEET NO. 11 OF 60

alton.cannon 12/24/2013 10:25:32 AM c:\pwworking\hmm\external\alton.cannon-arup.com\d0125341\FB-CT-1131-H.dgn

## LINE DATA

| NO. | BEARING | DISTANCE |
|---|---|---|
| 2 | S00°21'19"W | 500.00' |
| 3 | S45°21'47"E | 294.67' |

## CURVE DATA

| NO. | R | Δ | T | L |
|---|---|---|---|---|
| (1) | 1100.00' | 45°43'06" | 463.74' | 877.73' |
| (2) | 700.00' | 8°11'06" | 294.06' | 556.77' |

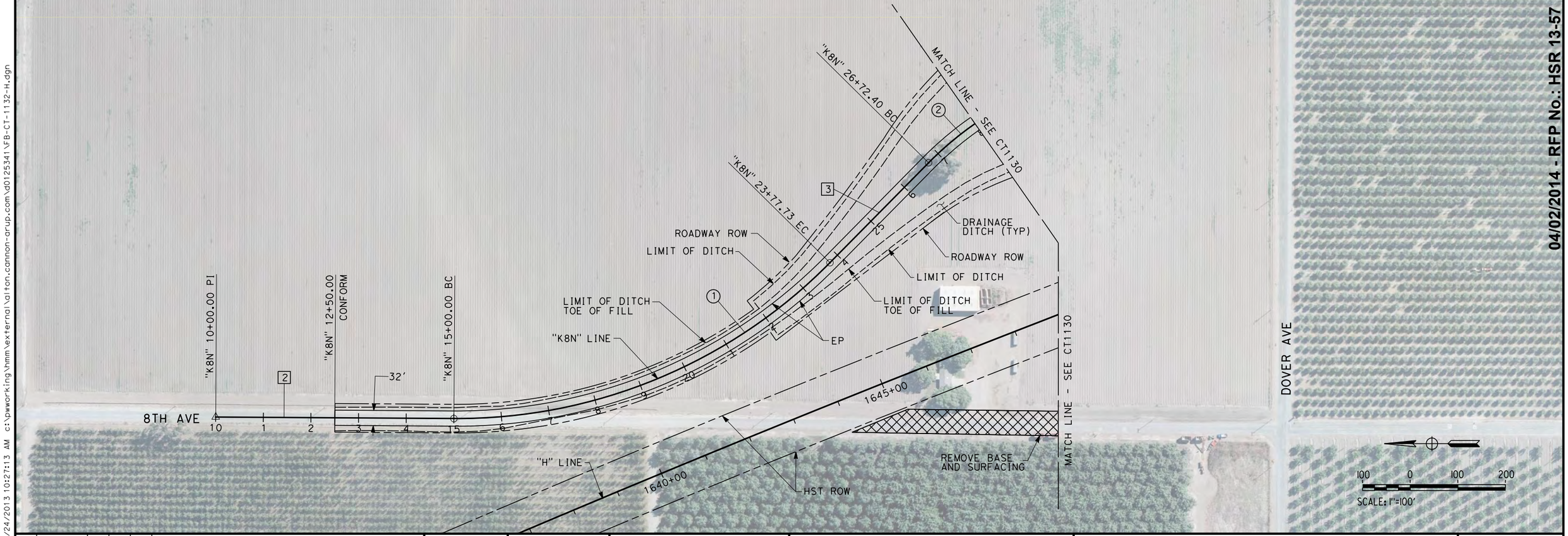


04/02/2014 - RFP No.: HSR 13-57

| REV | DATE | BY | CHK | APP | DESCRIPTION |
|---|---|---|---|---|---|

DESIGNED BY A. CANNON
DRAWN BY E. SUDHAUSEN
CHECKED BY S. BROWN
IN CHARGE R. COFFIN
DATE 12/31/13

**RECORD SET 15% DESIGN SUBMISSION - NOT FOR CONSTRUCTION**

URS | HMM | ARUP
CALIFORNIA HIGH-SPEED TRAIN

CALIFORNIA
HIGH-SPEED RAIL AUTHORITY

# CALIFORNIA HIGH-SPEED TRAIN PROJECT
# FRESNO TO BAKERSFIELD
HANFORD SUBSECTION
ALIGNMENT H
GRADE SEPARATION LAYOUT
8TH AVE (NORTH)

CONTRACT NO. HSR 06-0003
DRAWING NO. CT1132
SCALE AS SHOWN
SHEET NO. 12 OF 60

alton.cannon 12/24/2013 10:27:13 AM c:\pwworking\hmm\external\alton.cannon-arup.com\d0125341\FB-CT-1132-H.dgn

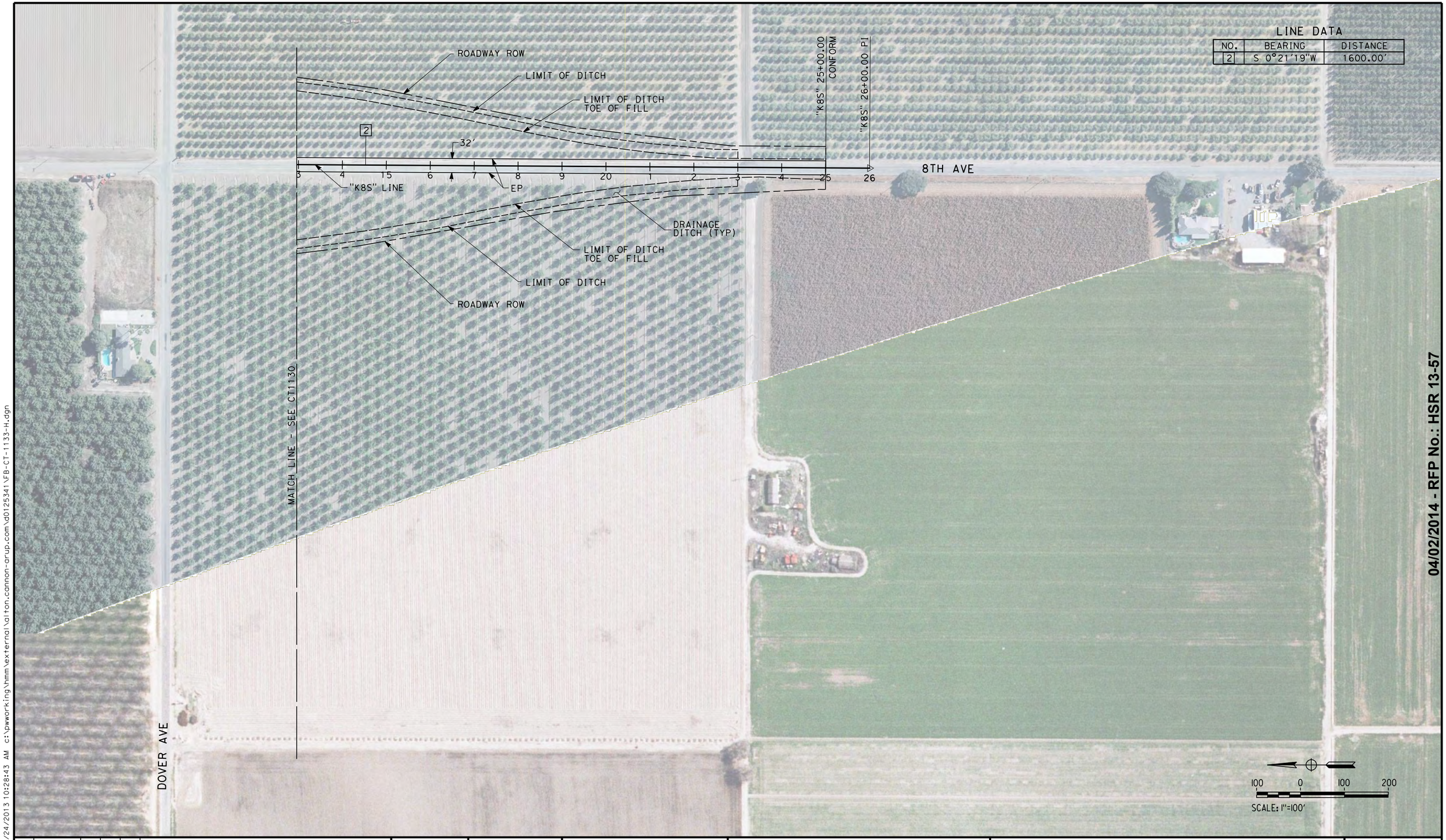


04/02/2014 - RFP No.: HSR 13-57

| REV | DATE | BY | CHK | APP | DESCRIPTION |
|---|---|---|---|---|---|

DESIGNED BY A. CANNON
DRAWN BY E. SUDHAUSEN
CHECKED BY S. BROWN
IN CHARGE R. COFFIN
DATE 12/31/13

**RECORD SET 15% DESIGN SUBMISSION - NOT FOR CONSTRUCTION**

URS | HMM | ARUP
California High-Speed Train

CALIFORNIA HIGH-SPEED RAIL AUTHORITY

# CALIFORNIA HIGH-SPEED TRAIN PROJECT
# FRESNO TO BAKERSFIELD
HANFORD SUBSECTION
ALIGNMENT H
GRADE SEPARATION LAYOUT
8TH AVE (SOUTH)

CONTRACT NO. HSR 06-0003
DRAWING NO. CT1133
SCALE AS SHOWN
SHEET NO. 13 OF 60

alton.cannon 12/24/2013 10:28:43 AM c:\pwworking\hmm\external\alton.cannon-arup.com\d0125341\FB-CT-1133-H.dgn

## LINE DATA

| NO. | BEARING | DISTANCE |
|---|---|---|
| 1 | S89°46'07"E | 250.00' |
| 2 | N74°29'50"E | 575.91' |
| 3 | S89°52'36"E | 600.52' |
| 4 | S74°15'02"E | 473.68' |

## CURVE DATA

| NO. | R | Δ | T | L |
|---|---|---|---|---|
| (1) | 1100.00' | 15°44'03" | 151.99' | 302.07' |
| (2) | 1100.00' | 15°37'34" | 150.94' | 300.00' |
| (3) | 1100.00' | 15°37'34" | 150.94' | 300.00' |

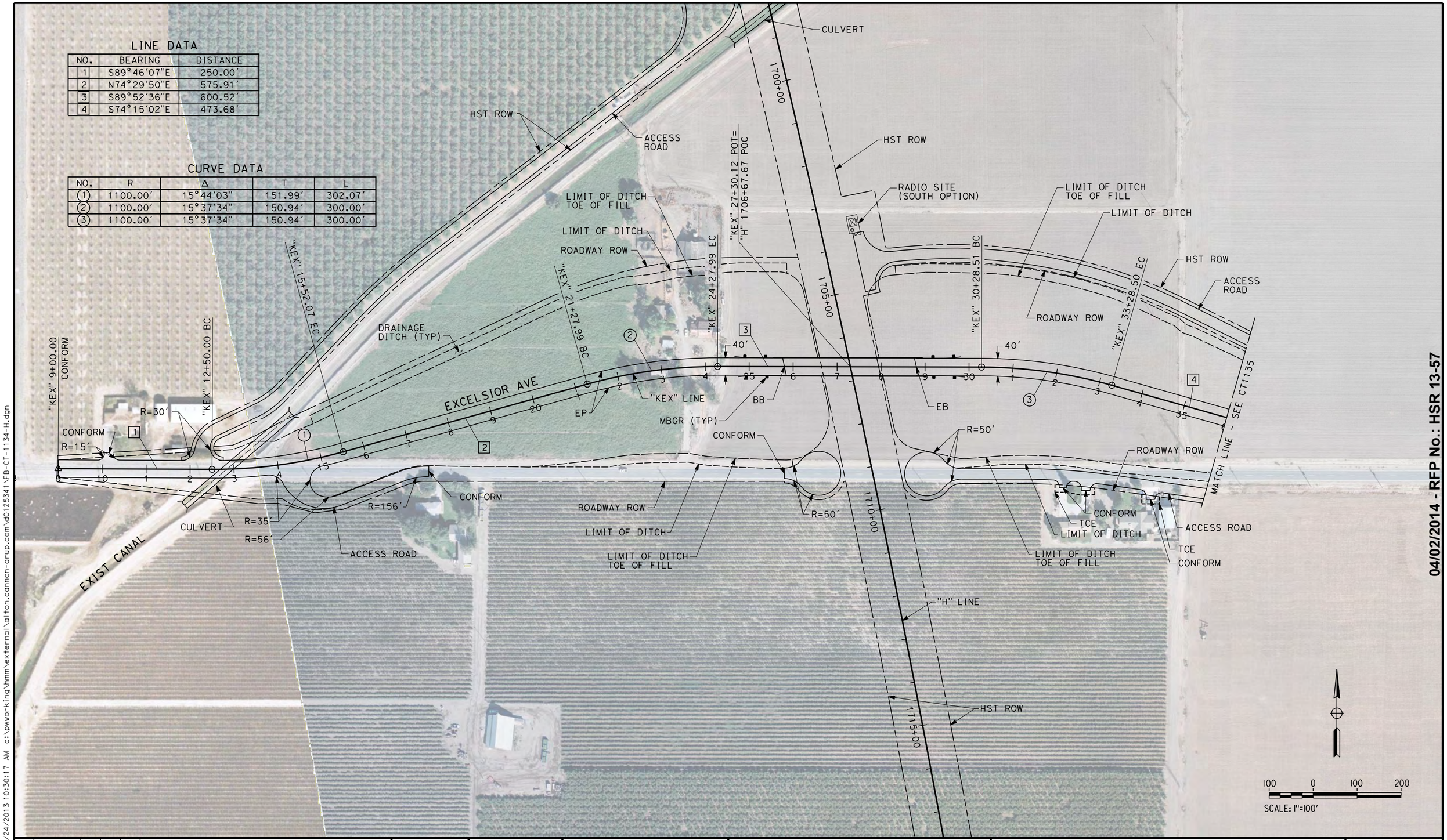


| REV | DATE | BY | CHK | APP | DESCRIPTION |
|---|---|---|---|---|---|
| | | | | | |

DESIGNED BY A. CANNON
DRAWN BY E. SUDHAUSEN
CHECKED BY S. BROWN
IN CHARGE R. COFFIN
DATE 12/31/13

**RECORD SET 15% DESIGN SUBMISSION - NOT FOR CONSTRUCTION**

URS | HMM | ARUP
CALIFORNIA HIGH-SPEED TRAIN

CALIFORNIA
HIGH-SPEED RAIL AUTHORITY

# CALIFORNIA HIGH-SPEED TRAIN PROJECT
# FRESNO TO BAKERSFIELD
HANFORD SUBSECTION
ALIGNMENT H
GRADE SEPARATION LAYOUT
EXCELSIOR AVE

CONTRACT NO. HSR 06-0003
DRAWING NO. CT1134
SCALE AS SHOWN
SHEET NO. 14 OF 60

04/02/2014 - RFP No.: HSR 13-57

12/24/2013 10:30:17 AM c:\pwworking\hmm\external\alton.cannon-arup.com\d0125341\FB-CT-1134-H.dgn alton.cannon

## LINE DATA

| NO. | BEARING | DISTANCE |
|---|---|---|
| 4 | S74°15'02"E | 473.68' |
| 5 | S89°46'07"E | 354.63' |

## CURVE DATA

| NO. | R | Δ | T | L |
|---|---|---|---|---|
| (4) | 2000.00' | 15°31'05" | 272.51' | 541.68' |

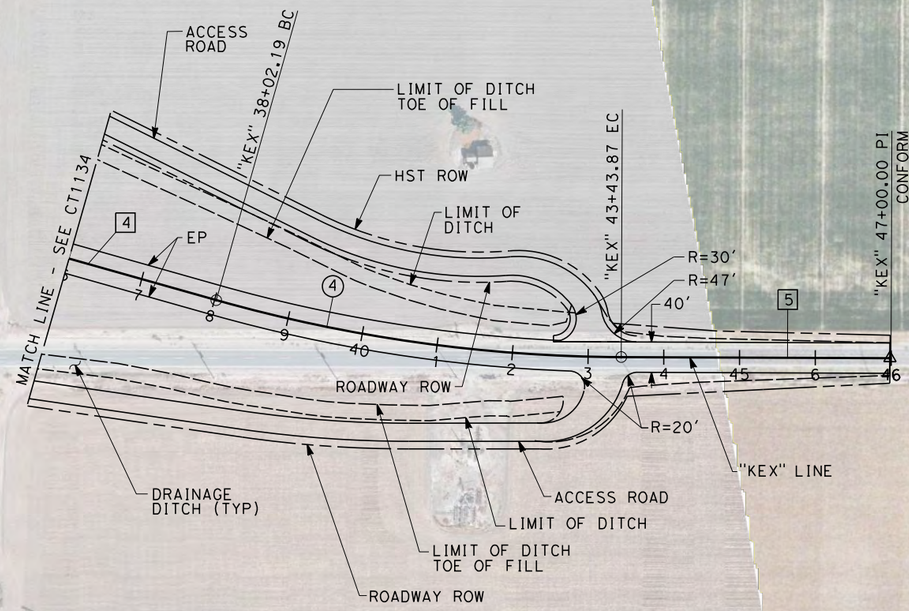


100 0 100 200

SCALE: 1"=100'

04/02/2014 - RFP No.: HSR 13-57

12/24/2013 10:31:04 AM c:\pwworking\hmm\external\alton.cannon-arup.com\d0125341\FB-CT-1135-H.dgn

alton.cannon

| REV | DATE | BY | CHK | APP | DESCRIPTION |
|---|---|---|---|---|---|
| | | | | | |

DESIGNED BY A. CANNON
DRAWN BY E. SUDHAUSEN
CHECKED BY S. BROWN
IN CHARGE R. COFFIN
DATE 12/31/13

**RECORD SET 15% DESIGN SUBMISSION - NOT FOR CONSTRUCTION**

URS | HMM | ARUP
CALIFORNIA HIGH-SPEED TRAIN

CALIFORNIA HIGH-SPEED RAIL AUTHORITY

# CALIFORNIA HIGH-SPEED TRAIN PROJECT
# FRESNO TO BAKERSFIELD

HANFORD SUBSECTION
ALIGNMENT H
GRADE SEPARATION LAYOUT
EXCELSIOR AVE

CONTRACT NO. HSR 06-0003
DRAWING NO. CT1135
SCALE AS SHOWN
SHEET NO. 15 OF 60

## LINE DATA

| NO. | BEARING | DISTANCE |
|---|---|---|
| 1 | S89°53'06"E | 251.35' |
| 2 | N74°39'31"E | 573.10' |
| 3 | N89°53'20"E | 800.03' |
| 4 | S74°05'35"E | 560.07' |

## CURVE DATA

| NO. | R | Δ | T | L |
|---|---|---|---|---|
| (1) | 1100.00' | 15°27'23" | 149.28' | 296.74' |
| (2) | 1100.00' | 15°13'50" | 147.07' | 292.40' |
| (3) | 1100.00' | 16°01'05" | 154.77' | 307.52' |

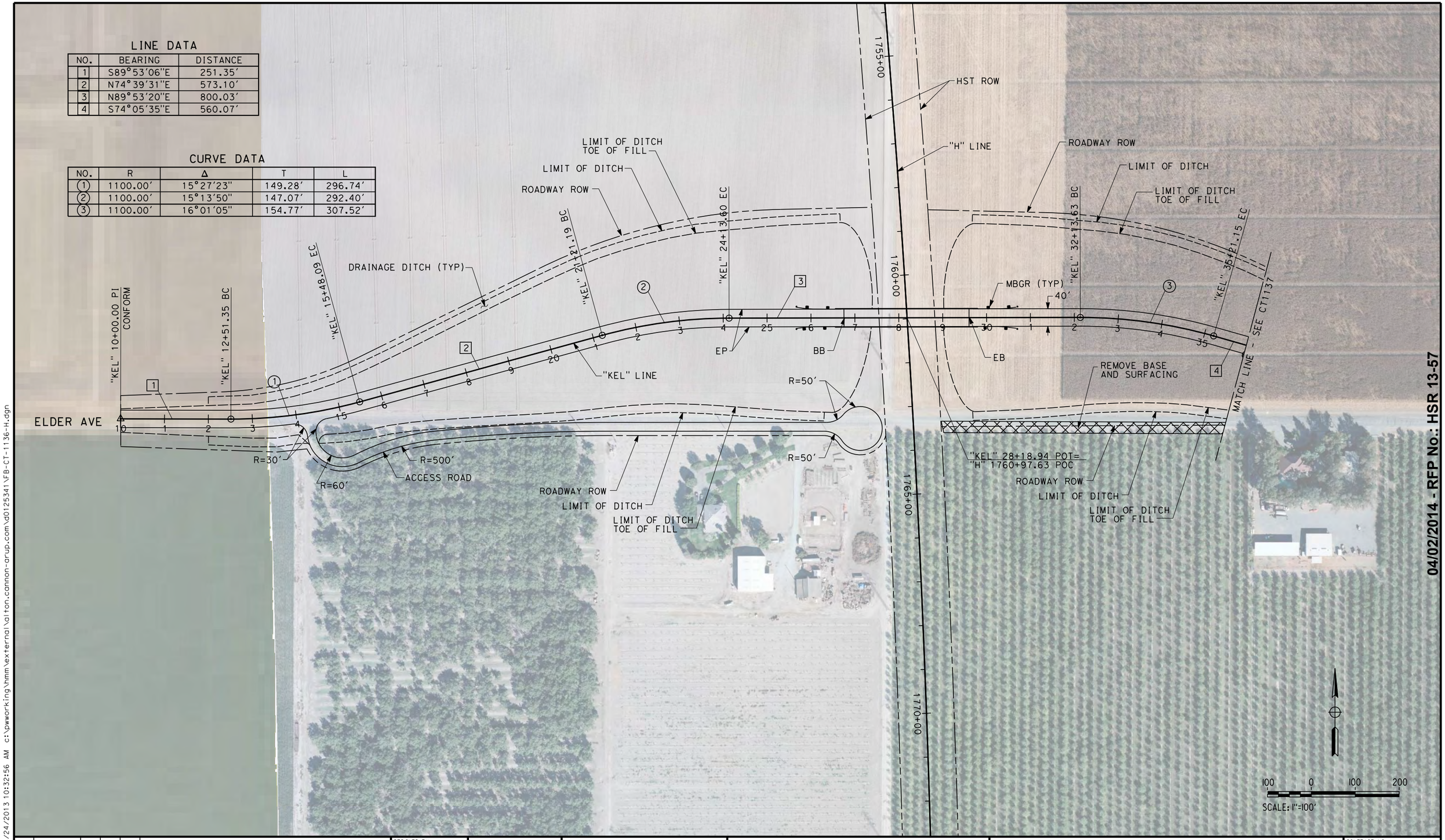


04/02/2014 - RFP No.: HSR 13-57

12/24/2013 10:32:56 AM c:\pwworking\hmm\external\alton.cannon-arup.com\d0125341\FB-CT-1136-H.dgn

alton.cannon

| REV | DATE | BY | CHK | APP | DESCRIPTION |
|---|---|---|---|---|---|
| | | | | | |

DESIGNED BY A. CANNON
DRAWN BY E. SUDHAUSEN
CHECKED BY S. BROWN
IN CHARGE R. COFFIN
DATE 12/31/13

**RECORD SET 15% DESIGN SUBMISSION - NOT FOR CONSTRUCTION**

URS | HMM | ARUP
CALIFORNIA HIGH-SPEED TRAIN

CALIFORNIA
HIGH-SPEED RAIL AUTHORITY

# CALIFORNIA HIGH-SPEED TRAIN PROJECT
# FRESNO TO BAKERSFIELD
HANFORD SUBSECTION
ALIGNMENT H
GRADE SEPARATION LAYOUT
ELDER AVE

CONTRACT NO. HSR 06-0003
DRAWING NO. CT1136
SCALE AS SHOWN
SHEET NO. 16 OF 60

## LINE DATA

| NO. | BEARING | DISTANCE |
|---|---|---|
| 4 | S74°05'35"E | 560.07' |
| 5 | S89°53'06"E | 248.68' |

## CURVE DATA

| NO. | R | Δ | T | L |
|---|---|---|---|---|
| (4) | 1100.00' | 15°47'31" | 152.56' | 303.18' |

04/02/2014 - RFP No.: HSR 13-57

12/24/2013 10:34:14 AM c:\pwworking\hmm\external\alton.cannon-arup.com\d0125341\FB-CT-1137-H.dgn

alton.cannon

| REV | DATE | BY | CHK | APP | DESCRIPTION |
|---|---|---|---|---|---|
| | | | | | |

DESIGNED BY A. CANNON
DRAWN BY E. SUDHAUSEN
CHECKED BY S. BROWN
IN CHARGE R. COFFIN
DATE 12/31/13

**RECORD SET 15% DESIGN SUBMISSION - NOT FOR CONSTRUCTION**

URS | HMM | ARUP
CALIFORNIA HIGH-SPEED TRAIN

CALIFORNIA HIGH-SPEED RAIL AUTHORITY

# CALIFORNIA HIGH-SPEED TRAIN PROJECT FRESNO TO BAKERSFIELD

HANFORD SUBSECTION
ALIGNMENT H
GRADE SEPARATION LAYOUT
ELDER AVE

CONTRACT NO. HSR 06-0003
DRAWING NO. CT1137
SCALE AS SHOWN
SHEET NO. 17 OF 60

## LINE DATA

| NO. | BEARING | DISTANCE |
|---|---|---|
| 1 | N89°18'29"E | 436.28' |
| 2 | N73°40'56"E | 607.67' |
| 3 | N89°18'29"E | 772.56' |

| NO. | R | Δ | T | L |
|---|---|---|---|---|
| (1) | 1400.00' | 15°37'34" | 192.10' | 381.82' |
| (2) | 1400.00' | 15°37'34" | 192.10' | 381.82' |
| (3) | 1400.00' | 15°37'34" | 192.10' | 381.82' |

"KFL" 6+00.00 PI CONFORM
"KFL" 12+09.52 BC
R=30'
R=33'
R=30'
R=30'
"KFL" 15+91.34 EC
"KFL" 21+44.12 BC
ACCESS ROAD
DRAINAGE DITCH (TYP)
ROADWAY ROW
HST ROW
ACCESS ROAD
CONFORM
LIMIT OF DITCH
LIMIT OF DITCH TOE OF FILL
"KFL" 25+25.93 EC
TRACTION POWER FACILITY (NORTH OPTION)
"KFL" LINE
MBGR (TYP)
40'
FLINT AVE
BB
ROADWAY ROW
LIMIT OF DITCH
LIMIT OF DITCH TOE OF FILL
CONFORM
R=50'
1810+00
1815+00
1820+00
1825+00
"H" LINE
HST ROW
"KFL" 29+34.77 POT= "H" 1814+88.45 POT
LIMIT OF DITCH TOE OF FILL
LIMIT OF DITCH
ROADWAY ROW
"KFL" 32+43.60 BC
EP
EB
MATCH LINE - SEE CT1139
ACCESS ROAD
R=30'
HST ROW
ROADWAY ROW
LIMIT OF DITCH
LIMIT OF DITCH TOE OF FILL
CANAL REALIGNMENT
TRACTION POWER FACILITY (SOUTH OPTION)
EXIST CANAL
CANAL REALIGNMENT
100 0 100 200
SCALE: 1"=100'

04/02/2014 - RFP No.: HSR 13-57

| REV | DATE | BY | CHK | APP | DESCRIPTION |
|---|---|---|---|---|---|

DESIGNED BY A. CANNON
DRAWN BY E. SUDHAUSEN
CHECKED BY S. BROWN
IN CHARGE R. COFFIN
DATE 12/31/13

**RECORD SET 15% DESIGN SUBMISSION - NOT FOR CONSTRUCTION**

URS | HMM | ARUP
CALIFORNIA HIGH-SPEED TRAIN

CALIFORNIA HIGH-SPEED RAIL AUTHORITY

# CALIFORNIA HIGH-SPEED TRAIN PROJECT
# FRESNO TO BAKERSFIELD
HANFORD SUBSECTION
ALIGNMENT H
GRADE SEPARATION LAYOUT
FLINT AVE

CONTRACT NO. HSR 06-0003
DRAWING NO. CT1138
SCALE AS SHOWN
SHEET NO. 18 OF 60

alton.cannon 12/24/2013 10:36:04 AM c:\pwworking\hmm\external\alton.cannon-arup.com\d01253411\FB-CT-1138-H.dgn

## LINE DATA

| NO. | BEARING | DISTANCE |
|---|---|---|
| 4 | S75°03'57"E | 607.67' |
| 5 | N89°18'29"E | 466.75' |

## CURVE DATA

| NO. | R | Δ | T | L |
|---|---|---|---|---|
| (4) | 1400.00' | 15°37'34" | 192.10' | 381.82' |

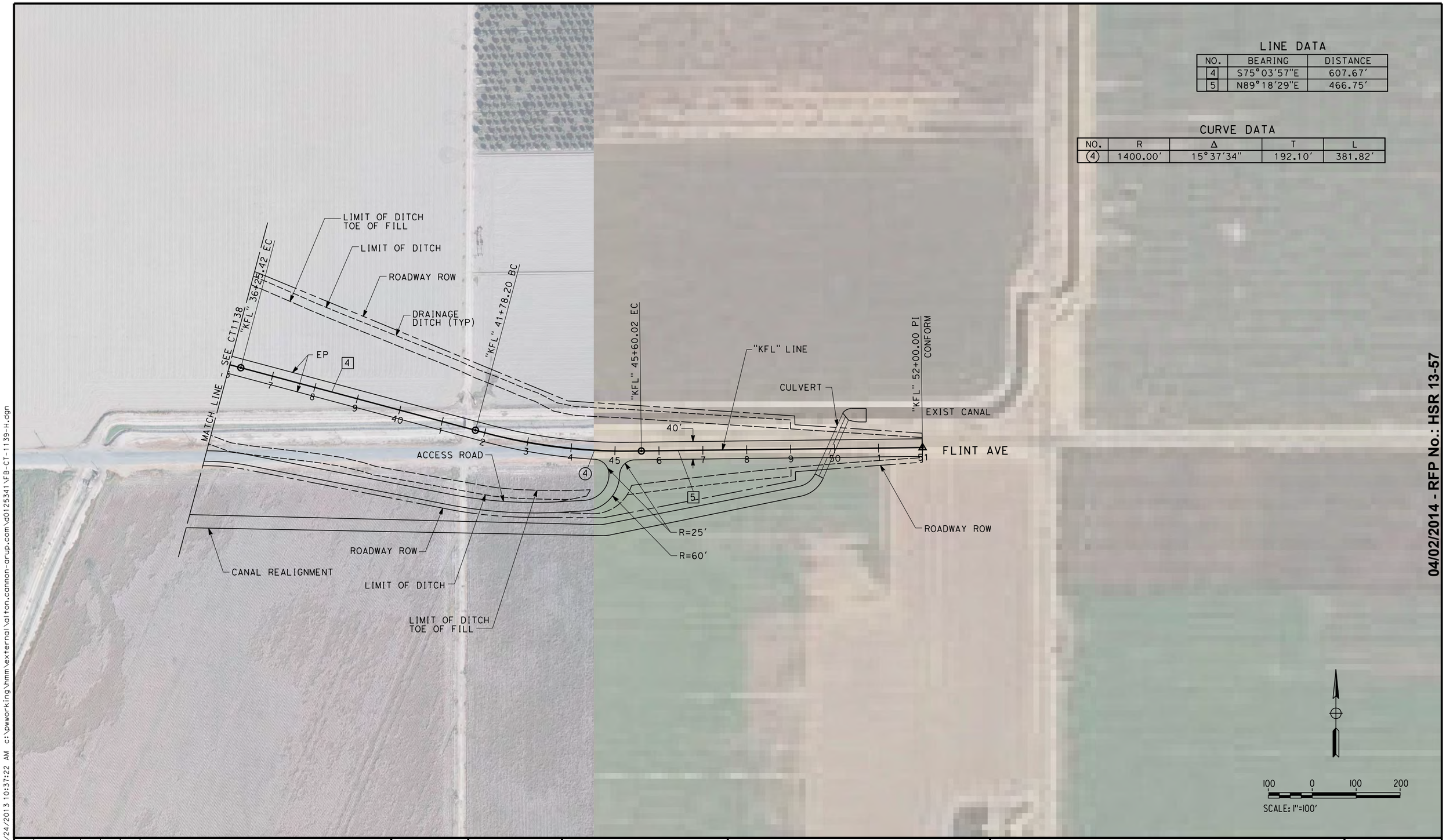


04/02/2014 - RFP No.: HSR 13-57

| REV | DATE | BY | CHK | APP | DESCRIPTION |
|---|---|---|---|---|---|

DESIGNED BY A. CANNON
DRAWN BY E. SUDHAUSEN
CHECKED BY S. BROWN
IN CHARGE R. COFFIN
DATE 12/31/13

**RECORD SET 15% DESIGN SUBMISSION - NOT FOR CONSTRUCTION**

URS | HMM | ARUP
CALIFORNIA HIGH-SPEED TRAIN

CALIFORNIA HIGH-SPEED RAIL AUTHORITY

# CALIFORNIA HIGH-SPEED TRAIN PROJECT
# FRESNO TO BAKERSFIELD
HANFORD SUBSECTION
ALIGNMENT H
GRADE SEPARATION LAYOUT
FLINT AVE

CONTRACT NO. HSR 06-0003
DRAWING NO. CT1139
SCALE AS SHOWN
SHEET NO. 19 OF 60

alton.cannon 12/24/2013 10:37:22 AM c:\pwworking\hmm\external\alton.cannon-arup.com\d0125341\FB-CT-1139-H.dgn

## CURVE DATA

| NO. | R | Δ | T | L |
|---|---|---|---|---|
| (1) | 2000.00′ | 15°14′58" | 267.74′ | 532.31′ |
| (2) | 1100.00′ | 15°13′18" | 146.98′ | 292.23′ |
| (3) | 1100.00′ | 15°18′24" | 147.81′ | 293.87′ |
| (5) | 100.00′ | 99°19′30" | 117.76′ | 173.36′ |
| (6) | 1000.00′ | 14°55′00" | 130.91′ | 260.34′ |
| (7) | 2000.00′ | 05°16′50" | 92.23′ | 184.32′ |
| (8) | 4000.00′ | 10°33′40" | 369.70′ | 737.30′ |
| (9) | 2000.00′ | 05°16′50" | 92.23′ | 184.32′ |

## LINE DATA

| NO. | BEARING | DISTANCE |
|---|---|---|
| 1 | N89°29′21"E | 233.20′ |
| 2 | N74°14′22"E | 402.68′ |
| 3 | N89°27′40"E | 707.08′ |
| 4 | S75°13′56"E | 401.67′ |
| 6 | S05°35′29"E | 32.08′ |
| 7 | N75°05′00"E | 339.15′ |
| 8 | S90°00′00"E | 531.91′ |
| 9 | S00°00′00"E | 50.00′ |
| 10 | S00°00′00"E | 50.00′ |

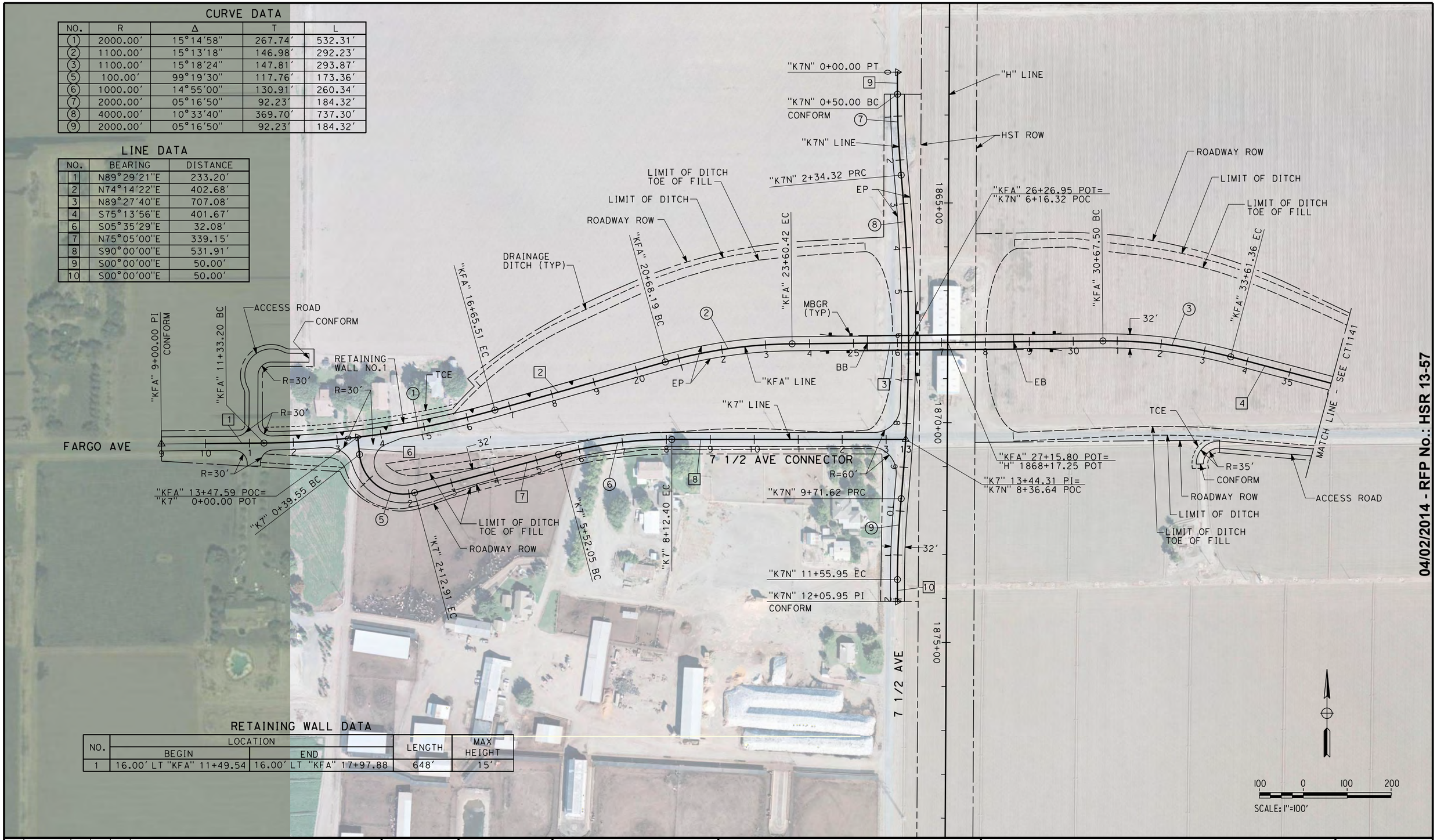


## RETAINING WALL DATA

| NO. | LOCATION | | LENGTH | MAX HEIGHT |
|---|---|---|---|---|
| | BEGIN | END | | |
| 1 | 16.00′ LT "KFA" 11+49.54 | 16.00′ LT "KFA" 17+97.88 | 648′ | 15′ |

04/02/2014 - RFP No.: HSR 13-57

$FILE$
$TIME$
$DATE$
$USER$

| REV | DATE | BY | CHK | APP | DESCRIPTION |
|---|---|---|---|---|---|

DESIGNED BY A. CANNON
DRAWN BY E. SUDHAUSEN
CHECKED BY S. BROWN
IN CHARGE R. COFFIN
DATE 12/31/13

**RECORD SET 15% DESIGN SUBMISSION - NOT FOR CONSTRUCTION**

URS | HMM | ARUP
CALIFORNIA HIGH-SPEED TRAIN

CALIFORNIA
HIGH-SPEED RAIL AUTHORITY

# CALIFORNIA HIGH-SPEED TRAIN PROJECT
# FRESNO TO BAKERSFIELD
HANFORD SUBSECTION
ALIGNMENT H
GRADE SEPARATION LAYOUT
FARGO AVE

CONTRACT NO. HSR 06-0003
DRAWING NO. CT1140
SCALE AS SHOWN
SHEET NO. 20 OF 60

## LINE DATA

| NO. | BEARING | DISTANCE |
|---|---|---|
| 4 | S75°13'56"E | 401.67' |
| 5 | N89°29'21"E | 303.65' |

## CURVE DATA

| NO. | R | Δ | T | L |
|---|---|---|---|---|
| (4) | 2000.00' | 15°16'43" | 268.25' | 533.33' |

04/02/2014 - RFP No.: HSR 13-57

$FILE$
$TIME$
$DATE$
$USER$

| REV | DATE | BY | CHK | APP | DESCRIPTION |
|---|---|---|---|---|---|
| | | | | | |

DESIGNED BY A. CANNON
DRAWN BY E. SUDHAUSEN
CHECKED BY S. BROWN
IN CHARGE R. COFFIN
DATE 12/31/13

**RECORD SET 15% DESIGN SUBMISSION - NOT FOR CONSTRUCTION**

URS | HMM | ARUP
CALIFORNIA HIGH-SPEED TRAIN

CALIFORNIA HIGH-SPEED RAIL AUTHORITY

# CALIFORNIA HIGH-SPEED TRAIN PROJECT
# FRESNO TO BAKERSFIELD
HANFORD SUBSECTION
ALIGNMENT H
GRADE SEPARATION LAYOUT
FARGO AVE

CONTRACT NO. HSR 06-0003
DRAWING NO. CT1141
SCALE AS SHOWN
SHEET NO. 21 OF 60

## LINE DATA

| NO. | BEARING | DISTANCE |
|---|---|---|
| 1 | S89°52'53"E | 3650.00' |

"KHA" 0+00.00 PI

"KHA" 0+88.49 CONFORM

TCE

R=15'

R=60'

R=75'

CONFORM

R=60'

R=75'

DRAINAGE DITCH (TYP)

LIMIT OF DITCH TOE OF FILL

LIMIT OF DITCH

ROADWAY ROW

HANFORD ARMONA RD

1

"KHA" LINE

2020+00

"H" LINE

EXISITNG CANAL

HST ROW

CANAL REALIGNMENT

2025+00

ROADWAY ROW

LIMIT OF DITCH

LIMIT OF DITCH TOE OF FILL

MBGR (TYP)

40'

MATCH LINE - SEE CT1145

0 1 2 3 4 5 6 7 8 9 10 1 2 3 4 15 6 7 8 9 20 1 2 3 4 25 6

R=25'

CONFORM

TCE

R=25'

CONFORM

TCE

R=30'

EP

BB

CULVERT

EB

2030+00

ROADWAY ROW

LIMIT OF DITCH

LIMIT OF DITCH TOE OF FILL

R=60'

TCE

"KHA" 18+24.99 POT= "H" 2029+28.99 POT

ROADWAY ROW

LIMIT OF DITCH

LIMIT OF DITCH TOE OF FILL

CONFORM

ACCESS ROAD

2035+00

EXISITNG CANAL

100 0 100 200

SCALE: 1"=100'

04/02/2014 - RFP No.: HSR 13-57

alton.cannon 12/24/2013 10:40:54 AM c:\pwworking\hmm\external\alton.cannon-arup.com\d0125341\FB-CT-1144-H.dgn

| REV | DATE | BY | CHK | APP | DESCRIPTION |
|---|---|---|---|---|---|

DESIGNED BY A. CANNON
DRAWN BY E. SUDHAUSEN
CHECKED BY S. BROWN
IN CHARGE R. COFFIN
DATE 12/31/13

**RECORD SET 15% DESIGN SUBMISSION - NOT FOR CONSTRUCTION**

URS | HMM | ARUP
CALIFORNIA HIGH-SPEED TRAIN

CALIFORNIA HIGH-SPEED RAIL AUTHORITY

# CALIFORNIA HIGH-SPEED TRAIN PROJECT
# FRESNO TO BAKERSFIELD

HANFORD SUBSECTION
ALIGNMENT H
GRADE SEPARATION LAYOUT
HANFORD ARMONA RD

CONTRACT NO. HSR 06-0003
DRAWING NO. CT1144
SCALE AS SHOWN
SHEET NO. 22 OF 60

LINE DATA

| NO. | BEARING | DISTANCE |
|---|---|---|
| 1 | S89°52'53"E | 3650.00' |

04/02/2014 - RFP No.: HSR 13-57

| REV | DATE | BY | CHK | APP | DESCRIPTION |
|---|---|---|---|---|---|
| | | | | | |

DESIGNED BY A. CANNON
DRAWN BY E. SUDHAUSEN
CHECKED BY S. BROWN
IN CHARGE R. COFFIN
DATE 12/31/13

RECORD SET 15% DESIGN SUBMISSION - NOT FOR CONSTRUCTION

URS | HMM | ARUP
California High-Speed Train

CALIFORNIA HIGH-SPEED RAIL AUTHORITY

# CALIFORNIA HIGH-SPEED TRAIN PROJECT
# FRESNO TO BAKERSFIELD
HANFORD SUBSECTION
ALIGNMENT H
GRADE SEPARATION LAYOUT
HANFORD ARMONA RD

CONTRACT NO. HSR 06-0003
DRAWING NO. CT1145
SCALE AS SHOWN
SHEET NO. 23 OF 60

alton.cannon 12/24/2013 10:42:14 AM c:\pwworking\hmm\external\alton.cannon-arup.com\d0125341\VFB-CT-1145-H.dgn

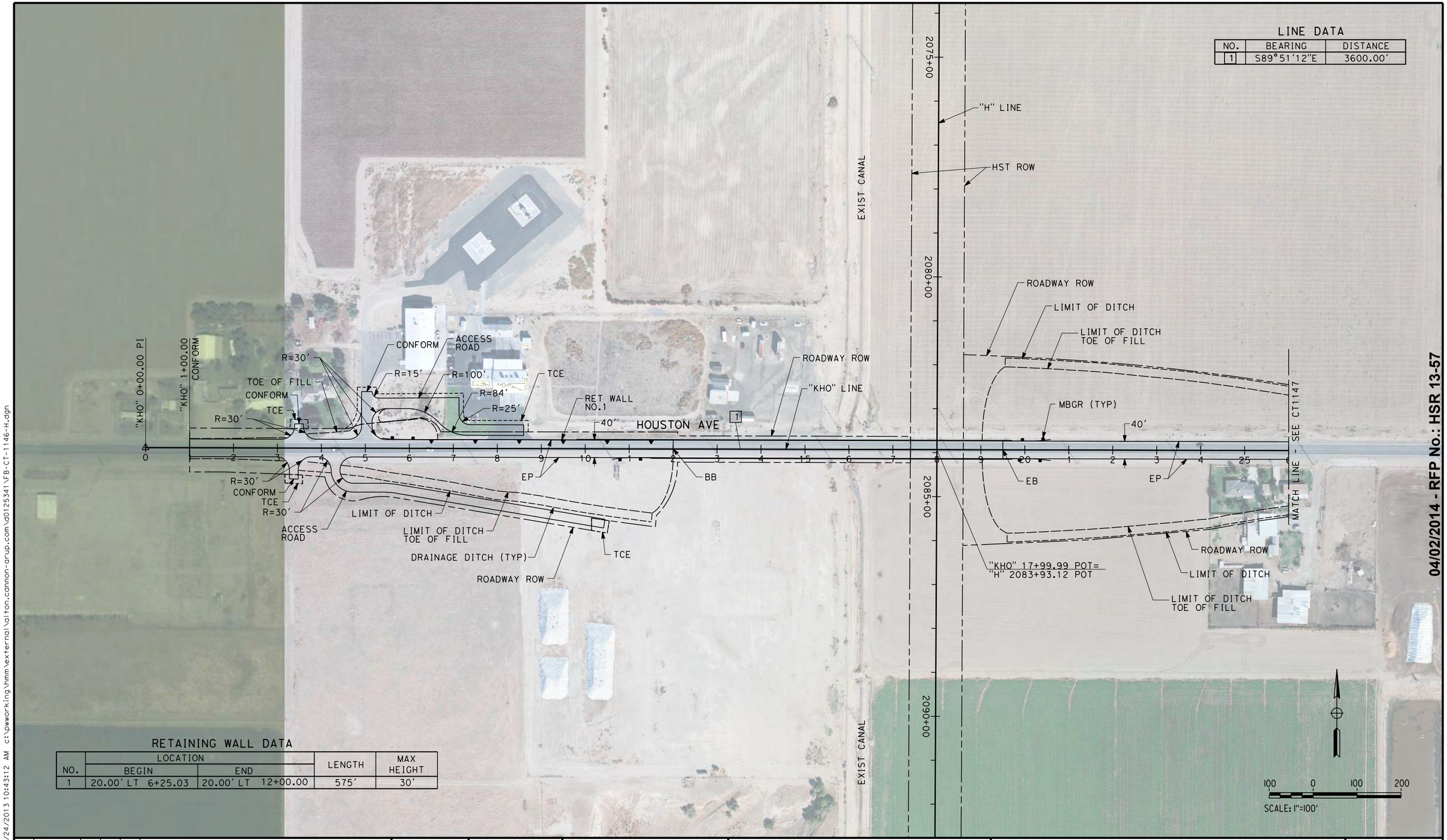


## RETAINING WALL DATA

| NO. | LOCATION | | LENGTH | MAX HEIGHT |
|---|---|---|---|---|
| | BEGIN | END | | |
| 1 | 20.00' LT 6+25.03 | 20.00' LT 12+00.00 | 575' | 30' |

04/02/2014 - RFP No.: HSR 13-57

| REV | DATE | BY | CHK | APP | DESCRIPTION |
|---|---|---|---|---|---|

DESIGNED BY A. CANNON
DRAWN BY E. SUDHAUSEN
CHECKED BY S. BROWN
IN CHARGE R. COFFIN
DATE 12/31/13

**RECORD SET 15% DESIGN SUBMISSION - NOT FOR CONSTRUCTION**

URS | HMM | ARUP
CALIFORNIA HIGH-SPEED TRAIN

CALIFORNIA HIGH-SPEED RAIL AUTHORITY

# CALIFORNIA HIGH-SPEED TRAIN PROJECT
# FRESNO TO BAKERSFIELD
HANFORD SUBSECTION
ALIGNMENT H
GRADE SEPARATION LAYOUT
HOUSTON AVE

CONTRACT NO. HSR 06-0003
DRAWING NO. CT1146
SCALE AS SHOWN
SHEET NO. 24 OF 60

12/24/2013 10:43:12 AM c:\pwworking\hmm\external\alton.cannon-arup.com\d0125341\FB-CT-1146-H.dgn
alton.cannon

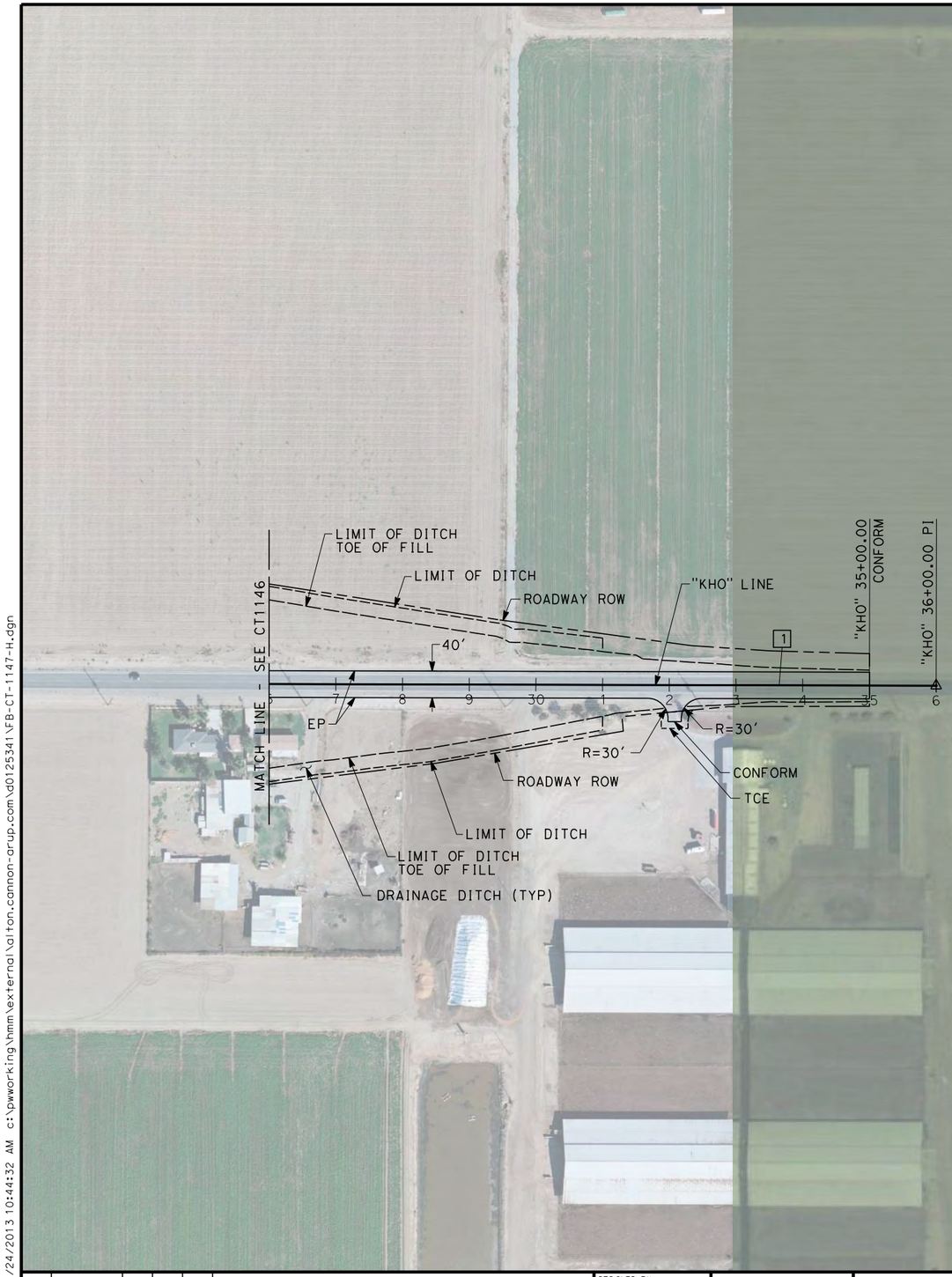

LINE DATA

| NO. | BEARING | DISTANCE |
|---|---|---|
| 1 | S89°51'12"E | 3600.00' |

100 0 100 200

SCALE: 1"=100'

04/02/2014 - RFP No.: HSR 13-57

| REV | DATE | BY | CHK | APP | DESCRIPTION |
|---|---|---|---|---|---|
| | | | | | |

DESIGNED BY A. CANNON
DRAWN BY E. SUDHAUSEN
CHECKED BY S. BROWN
IN CHARGE R. COFFIN
DATE 12/31/13

**RECORD SET 15% DESIGN SUBMISSION - NOT FOR CONSTRUCTION**

URS | HMM | ARUP
CALIFORNIA HIGH-SPEED TRAIN

CALIFORNIA
HIGH-SPEED RAIL AUTHORITY

# CALIFORNIA HIGH-SPEED TRAIN PROJECT
# FRESNO TO BAKERSFIELD
HANFORD SUBSECTION
ALIGNMENT H
GRADE SEPARATION LAYOUT
HOUSTON AVE

CONTRACT NO. HSR 06-0003
DRAWING NO. CT1147
SCALE AS SHOWN
SHEET NO. 25 OF 60

12/24/2013 10:44:32 AM c:\pwworking\hmm\external\alton.cannon-arup.com\d0125341\FB-CT-1147-H.dgn
alton.cannon

## LINE DATA

| NO. | BEARING | DISTANCE |
|---|---|---|
| 1 | S89°45'10"E | 3600.00' |

EXIST CANAL
"H" LINE
HST ROW
CANAL REALIGNMENT
RETENTION BASIN
ROADWAY ROW
LIMIT OF DITCH
LIMIT OF DITCH TOE OF FILL
DRAINAGE DITCH (TYP)
"KIO" 0+00.00 PI
32'
"KIO" LINE
1
IONA AVE
"KIO" 18+00.00 POT= "H" 2136+82.40 POT
EP
BB
EB
MBGR (TYP)
CULVERT
"KIO" 0+29.73 CONFORM
ROADWAY ROW
LIMIT OF DITCH
LIMIT OF DITCH TOE OF FILL
2130+00
2135+00
2140+00
2144+63
"H" 2144+63.00 POT =
"K3" 2073+97.00 POT =
"K4" 2074+96.00 POT =
MATCH LINE - SEE CT1149
ACCESS ROAD
100 0 100 200
SCALE: 1"=100'

04/02/2014 - RFP No.: HSR 13-57

$USER$ $TIME$ $DATE$ $FILE$

| REV | DATE | BY | CHK | APP | DESCRIPTION |
|---|---|---|---|---|---|

DESIGNED BY A. CANNON
DRAWN BY E. SUDHAUSEN
CHECKED BY S. BROWN
IN CHARGE R. COFFIN
DATE 12/31/13

**RECORD SET 15% DESIGN SUBMISSION - NOT FOR CONSTRUCTION**

URS | HMM | ARUP
CALIFORNIA HIGH-SPEED TRAIN

CALIFORNIA HIGH-SPEED RAIL AUTHORITY

# CALIFORNIA HIGH-SPEED TRAIN PROJECT
# FRESNO TO BAKERSFIELD
HANFORD SUBSECTION
ALIGNMENT H
GRADE SEPARATION LAYOUT
IONA AVE

CONTRACT NO. HSR 06-0003
DRAWING NO. CT1148
SCALE AS SHOWN
SHEET NO. 26 OF 60

LINE DATA

| NO. | BEARING | DISTANCE |
|---|---|---|
| 1 | S89°45'10"E | 3600.00' |

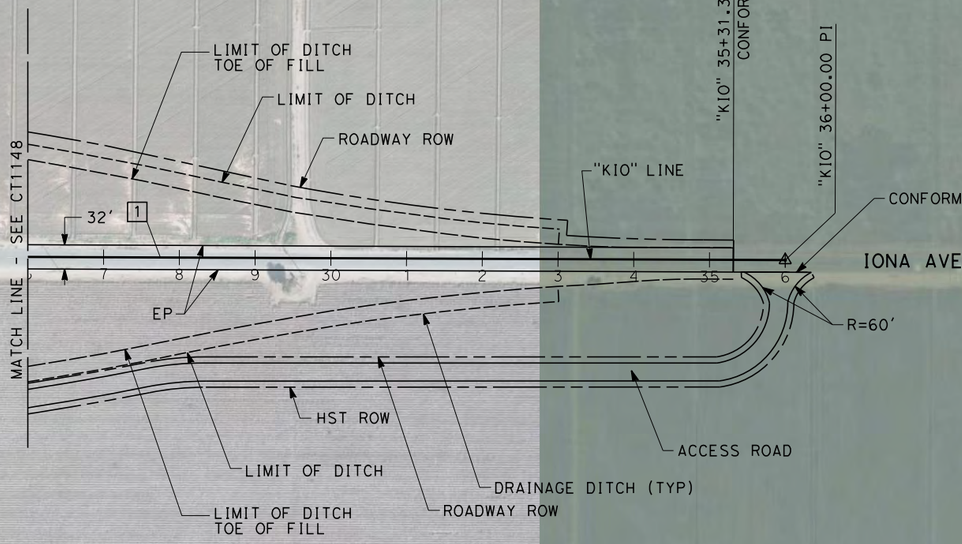


100 0 100 200

SCALE: 1"=100'

04/02/2014 - RFP No.: HSR 13-57

| REV | DATE | BY | CHK | APP | DESCRIPTION |
|---|---|---|---|---|---|

DESIGNED BY A. CANNON
DRAWN BY E. SUDHAUSEN
CHECKED BY S. BROWN
IN CHARGE R. COFFIN
DATE 12/31/13

**RECORD SET 15% DESIGN SUBMISSION - NOT FOR CONSTRUCTION**

URS | HMM | ARUP
CALIFORNIA HIGH-SPEED TRAIN

CALIFORNIA HIGH-SPEED RAIL AUTHORITY

**CALIFORNIA HIGH-SPEED TRAIN PROJECT**
**FRESNO TO BAKERSFIELD**
HANFORD SUBSECTION
ALIGNMENT H
GRADE SEPARATION LAYOUT
IONA AVE

CONTRACT NO. HSR 06-0003
DRAWING NO. CT1149
SCALE AS SHOWN
SHEET NO. 27 OF 60

alton.cannon 12/24/2013 10:46:43 AM c:\pwworking\hmm\external\alton.cannon-arup.com\d0125341\FB-CT-1149-H.dgn

NOTES:

1. MIN VERTICAL CLEARANCE FOR HST IS 27' FROM TOP OF RAIL

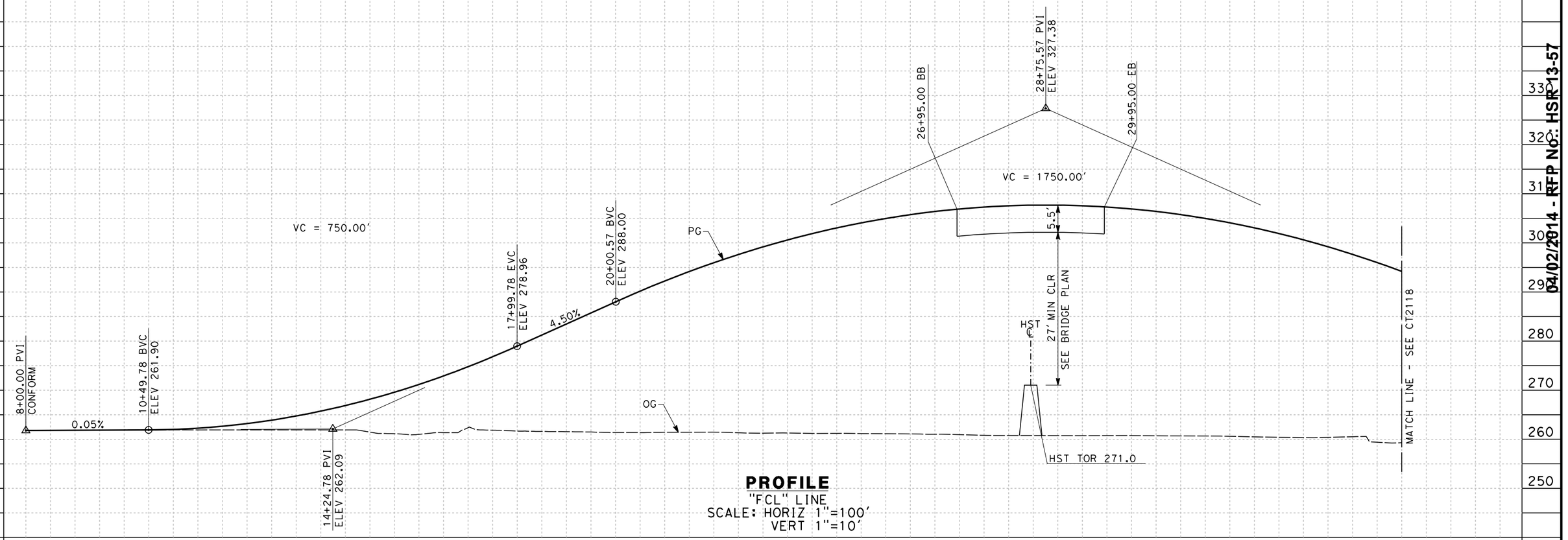


**PROFILE**
"FCL" LINE
SCALE: HORIZ 1"=100'
VERT 1"=10'

| STATION | 8 | 9 | 10 | 1 | 2 | 3 | 4 | 15 | 6 | 7 | 8 | 9 | 20 | 1 | 2 | 3 | 4 | 25 | 6 | 7 | 8 | 9 | 30 | 1 | 2 | 3 | 4 | 35 | 6 | TOTAL |
|---|---|---|---|---|---|---|---|---|---|---|---|---|---|---|---|---|---|---|---|---|---|---|---|---|---|---|---|---|---|---|
| CY Exc | | | | | | | | | | | | | | | | | | | | | | | | | | | | | | |
| CY Emb | | | | | | | | | | | | | | | | | | | | | | | | | | | | | | |

| REV | DATE | BY | CHK | APP | DESCRIPTION |
|---|---|---|---|---|---|

DESIGNED BY A, CANNON
DRAWN BY E. SUDHAUSEN
CHECKED BY S. BROWN
IN CHARGE R. COFFIN
DATE 12/31/13

**RECORD SET 15% DESIGN SUBMISSION - NOT FOR CONSTRUCTION**

URS | HMM | ARUP
CALIFORNIA HIGH-SPEED TRAIN

CALIFORNIA
HIGH-SPEED RAIL AUTHORITY

**CALIFORNIA HIGH-SPEED TRAIN PROJECT**
**FRESNO TO BAKERSFIELD**
HANFORD SUBSECTION
ALIGNMENT H
GRADE SEPARATION PROFILE
S CLOVIS AVE

CONTRACT NO. HSR 06-0003
DRAWING NO. CT2117
SCALE AS SHOWN
SHEET NO. 28 OF 60

04/02/2014 - RFP No. HSR13-57

eron.sudhausen 12/27/2013 4:25:16 PM c:\pwworking\hmm\external\eron.sudhausen-arup.com\d0125341\FB-CT-2117-H.dgn

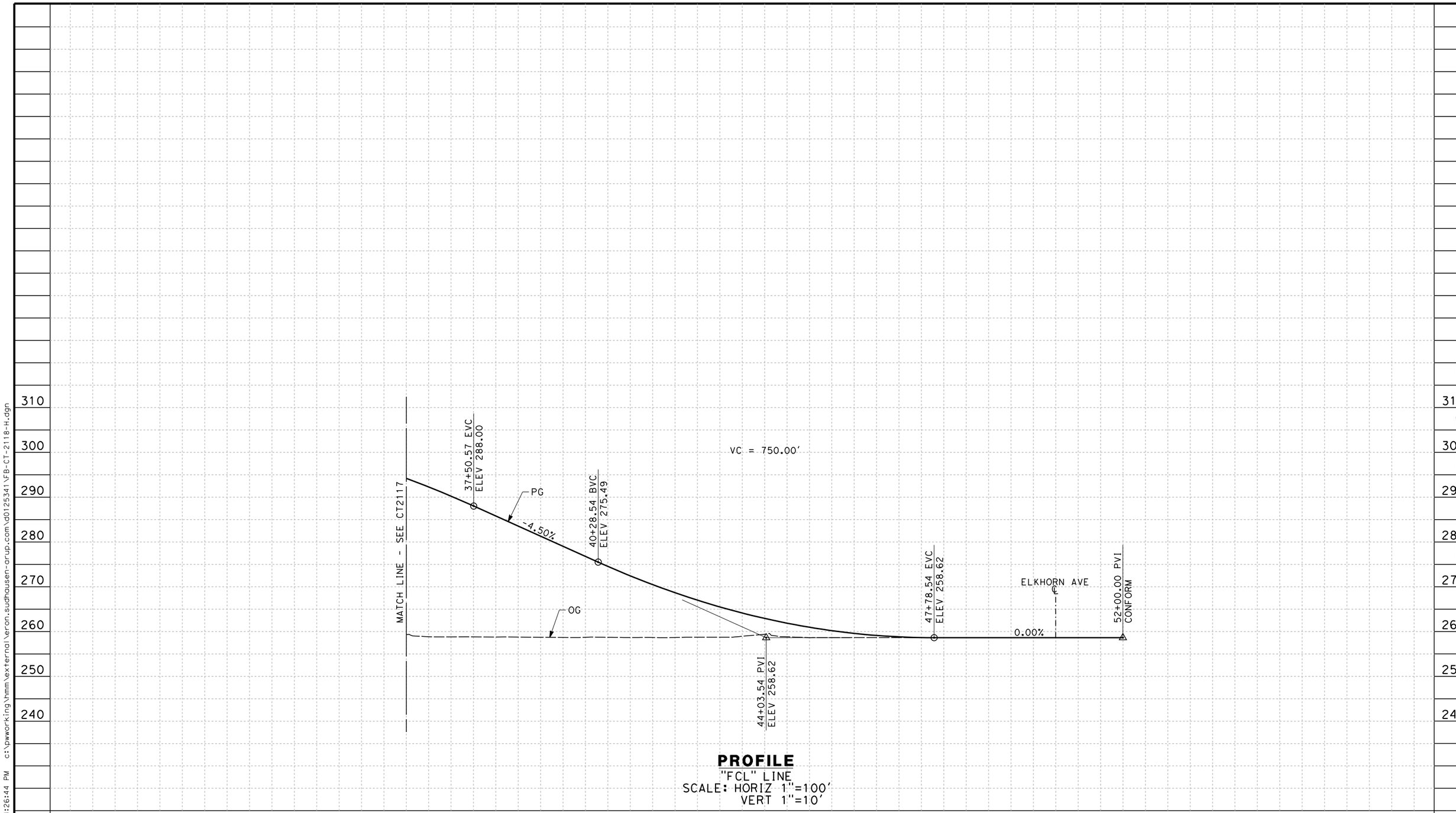


**PROFILE**
"FCL" LINE
SCALE: HORIZ 1"=100'
VERT 1"=10'

| STATION | 6 | 7 | 8 | 9 | 40 | 1 | 2 | 3 | 4 | 45 | 6 | 7 | 8 | 9 | 50 | 1 | 2 | TOTAL |
|---|---|---|---|---|---|---|---|---|---|---|---|---|---|---|---|---|---|---|
| CY Exc | | | | | | | | | | | | | | | | | | |
| CY Emb | | | | | | | | | | | | | | | | | | |

| REV | DATE | BY | CHK | APP | DESCRIPTION |
|---|---|---|---|---|---|

DESIGNED BY A. CANNON
DRAWN BY E. SUDHAUSEN
CHECKED BY S. BROWN
IN CHARGE R. COFFIN
DATE 12/31/13

**RECORD SET 15% DESIGN SUBMISSION - NOT FOR CONSTRUCTION**

URS | HMM | ARUP
CALIFORNIA HIGH-SPEED TRAIN

CALIFORNIA HIGH-SPEED RAIL AUTHORITY

**CALIFORNIA HIGH-SPEED TRAIN PROJECT**
**FRESNO TO BAKERSFIELD**
HANFORD SUBSECTION
ALIGNMENT H
GRADE SEPARATION PROFILE
S CLOVIS AVE

CONTRACT NO. HSR 06-0003
DRAWING NO. CT2118
SCALE AS SHOWN
SHEET NO. 29 OF 60

04/02/2014 - RFP No: HSR13-57

c:\pwworking\hmm\external\eron.sudhausen-arup.com\d0125341\FB-CT-2118-H.dgn
12/27/2013 4:26:44 PM
eron.sudhausen

NOTES:

1. MIN VERTICAL CLEARANCE FOR HST IS 27' FROM TOP OF RAIL

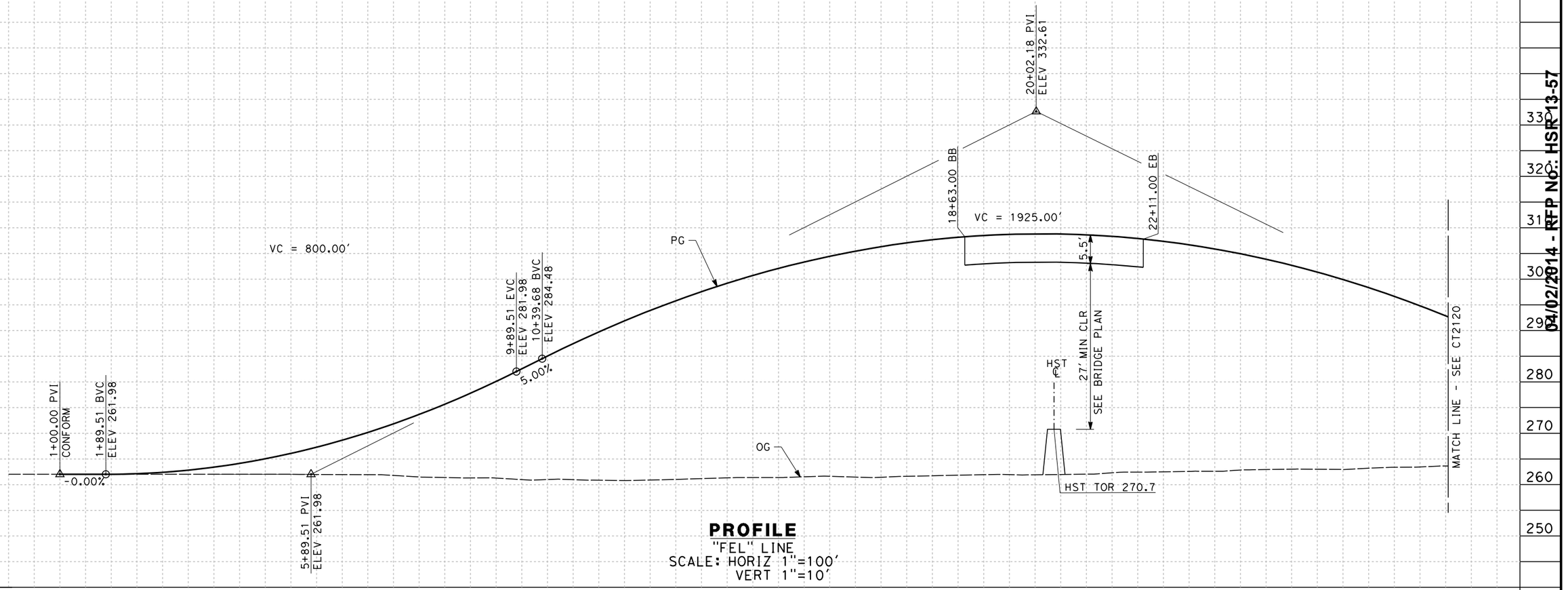


**PROFILE**
"FEL" LINE
SCALE: HORIZ 1"=100'
VERT 1"=10'

| STATION | 0 | 1 | 2 | 3 | 4 | 5 | 6 | 7 | 8 | 9 | 10 | 1 | 2 | 3 | 4 | 15 | 6 | 7 | 8 | 9 | 20 | 1 | 2 | 3 | 4 | 25 | 6 | 7 | 8 | TOTAL |
|---|---|---|---|---|---|---|---|---|---|---|---|---|---|---|---|---|---|---|---|---|---|---|---|---|---|---|---|---|---|---|
| CY Exc | | | | | | | | | | | | | | | | | | | | | | | | | | | | | | |
| CY Emb | | | | | | | | | | | | | | | | | | | | | | | | | | | | | | |

| REV | DATE | BY | CHK | APP | DESCRIPTION |
|---|---|---|---|---|---|

DESIGNED BY A. CANNON
DRAWN BY E. SUDHAUSEN
CHECKED BY S. BROWN
IN CHARGE R. COFFIN
DATE 12/31/13

**RECORD SET 15% DESIGN SUBMISSION - NOT FOR CONSTRUCTION**

URS | HMM | ARUP
CALIFORNIA HIGH-SPEED TRAIN

CALIFORNIA
HIGH-SPEED RAIL AUTHORITY

**CALIFORNIA HIGH-SPEED TRAIN PROJECT**
**FRESNO TO BAKERSFIELD**
HANFORD SUBSECTION
ALIGNMENT H
GRADE SEPARATION PROFILE
E ELKHORN AVE

CONTRACT NO. HSR 06-0003
DRAWING NO. CT2119
SCALE AS SHOWN
SHEET NO. 30 OF 60

04/02/2014 - RFP No. HSR13-57

eron.sudhausen 12/27/2013 4:29:10 PM c:\pwworking\hmm\external\eron.sudhausen-arup.com\d0125341\FB-CT-2119-H.dgn

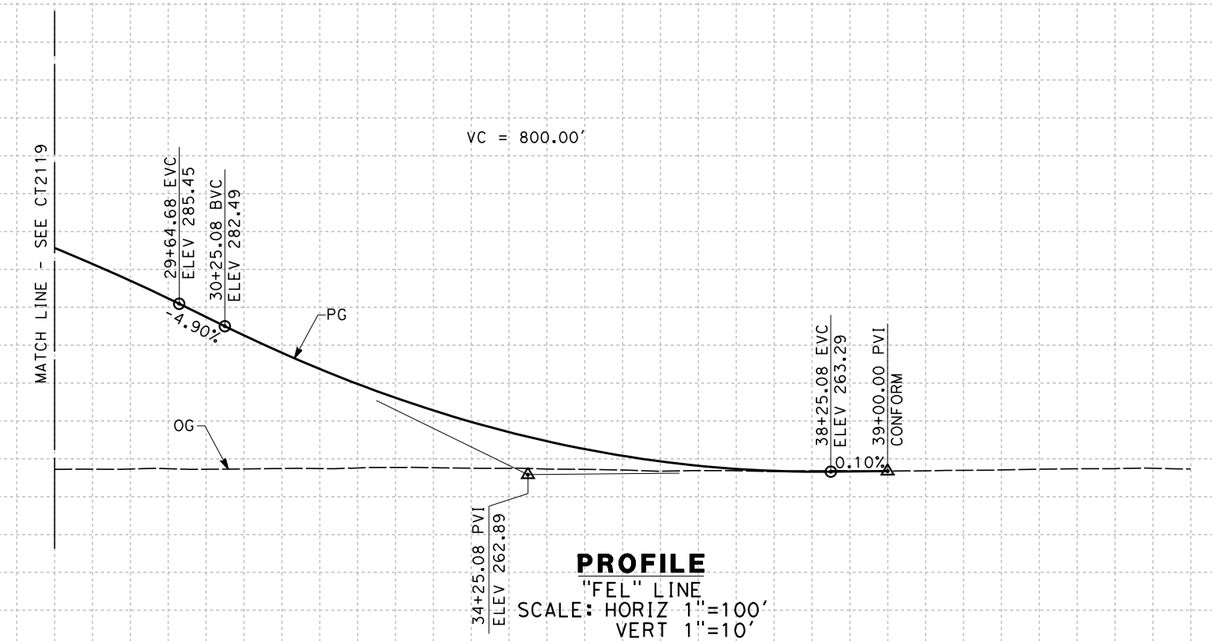


**PROFILE**
"FEL" LINE
SCALE: HORIZ 1"=100'
VERT 1"=10'

| STATION | 8 | 9 | 30 | 1 | 2 | 3 | 4 | 35 | 6 | 7 | 8 | 9 | 40 | 1 | 2 | 3 | 4 | TOTAL |
|---|---|---|---|---|---|---|---|---|---|---|---|---|---|---|---|---|---|---|
| CY Exc | | | | | | | | | | | | | | | | | | |
| CY Emb | | | | | | | | | | | | | | | | | | |

| REV | DATE | BY | CHK | APP | DESCRIPTION |
|---|---|---|---|---|---|

DESIGNED BY A. CANNON
DRAWN BY E. SUDHAUSEN
CHECKED BY S. BROWN
IN CHARGE R. COFFIN
DATE 12/31/13

**RECORD SET 15% DESIGN SUBMISSION - NOT FOR CONSTRUCTION**

URS | HMM | ARUP
CALIFORNIA HIGH-SPEED TRAIN

CALIFORNIA
HIGH-SPEED RAIL AUTHORITY

**CALIFORNIA HIGH-SPEED TRAIN PROJECT**
**FRESNO TO BAKERSFIELD**
HANFORD SUBSECTION
ALIGNMENT H
GRADE SEPARATION PROFILE
E ELKHORN AVE

CONTRACT NO. HSR 06-0003
DRAWING NO. CT2120
SCALE AS SHOWN
SHEET NO. 31 OF 60

04/02/2014 - RFP No: HSR 13-57

c:\pwworking\hmm\external\eron.sudhausen-arup.com\d0125341\FB-CT-2120-H.dgn
eron.sudhausen 12/27/2013 4:41:52 PM

NOTES:

1. MIN VERTICAL CLEARANCE FOR HST IS 27' FROM TOP OF RAIL

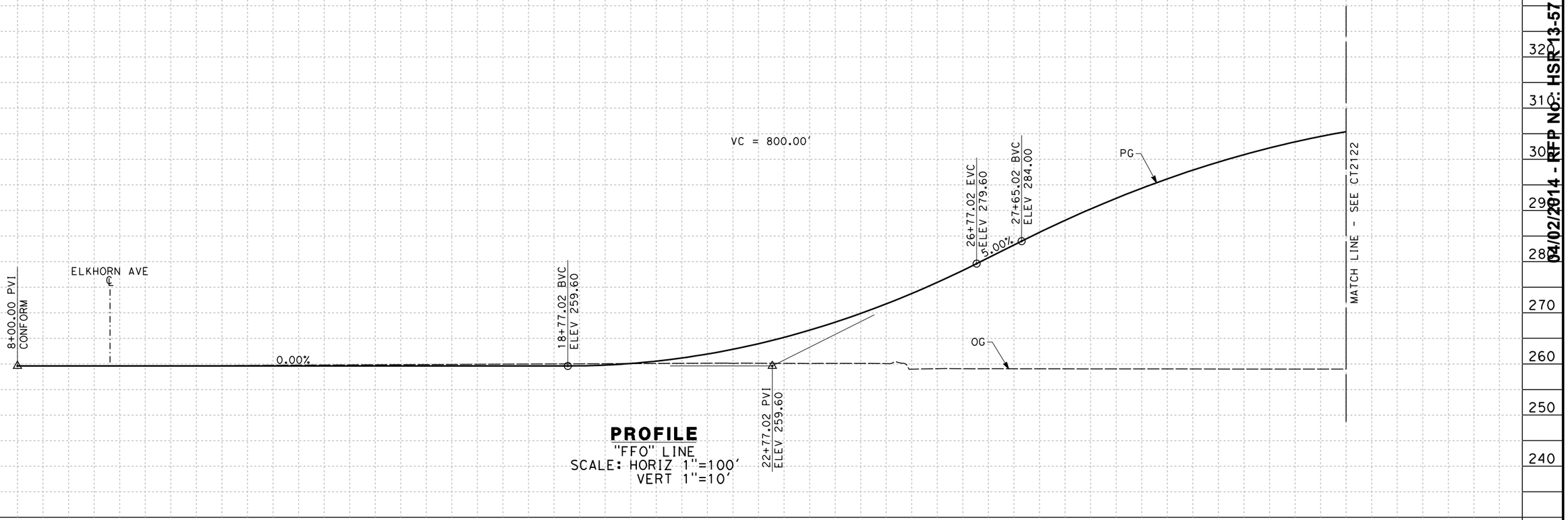


**PROFILE**
"FFO" LINE
SCALE: HORIZ 1"=100'
VERT 1"=10'

| STATION | 8 | 9 | 10 | 1 | 2 | 3 | 4 | 15 | 6 | 7 | 8 | 9 | 20 | 1 | 2 | 3 | 4 | 25 | 6 | 7 | 8 | 9 | 30 | 1 | 2 | 3 | 4 | TOTAL |
|---|---|---|---|---|---|---|---|---|---|---|---|---|---|---|---|---|---|---|---|---|---|---|---|---|---|---|---|---|
| CY Exc | | | | | | | | | | | | | | | | | | | | | | | | | | | | |
| CY Emb | | | | | | | | | | | | | | | | | | | | | | | | | | | | |

| REV | DATE | BY | CHK | APP | DESCRIPTION |
|---|---|---|---|---|---|

DESIGNED BY A. CANNON
DRAWN BY E. SUDHAUSEN
CHECKED BY S. BROWN
IN CHARGE R. COFFIN
DATE 12/31/13

**RECORD SET 15% DESIGN SUBMISSION - NOT FOR CONSTRUCTION**

URS | HMM | ARUP
CALIFORNIA HIGH-SPEED TRAIN

CALIFORNIA
HIGH-SPEED RAIL AUTHORITY

**CALIFORNIA HIGH-SPEED TRAIN PROJECT**
**FRESNO TO BAKERSFIELD**
HANFORD SUBSECTION
ALIGNMENT H
GRADE SEPARATION PROFILE
S FOWLER AVE

CONTRACT NO. HSR 06-0003
DRAWING NO. CT2121
SCALE AS SHOWN
SHEET NO. 32 OF 60

**RFP No: HSR13-57**
**04/02/2014 - RFP No**

c:\pwworking\hmm\external\eron.sudhausen-arup.com\d0125341\FB-CT-2121-H.dgn
12/27/2013 4:43:40 PM eron.sudhausen

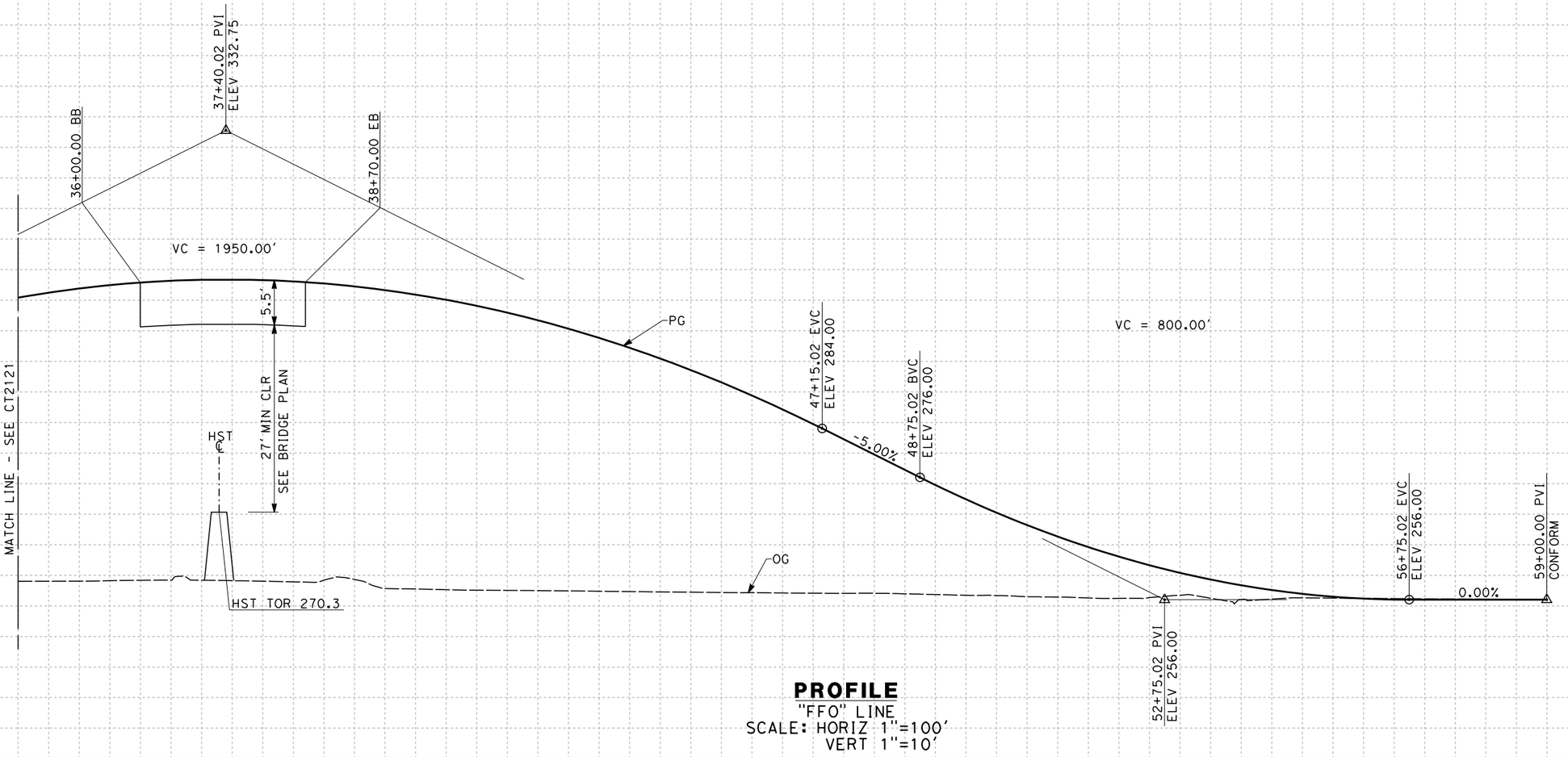


**PROFILE**
"FFO" LINE
SCALE: HORIZ 1"=100'
VERT 1"=10'

| STATION | 4 | 35 | 6 | 7 | 8 | 9 | 40 | 1 | 2 | 3 | 4 | 45 | 6 | 7 | 8 | 9 | 50 | 1 | 2 | 3 | 4 | 55 | 6 | 7 | 8 | TOTAL |
|---|---|---|---|---|---|---|---|---|---|---|---|---|---|---|---|---|---|---|---|---|---|---|---|---|---|---|
| CY Exc | | | | | | | | | | | | | | | | | | | | | | | | | | |
| CY Emb | | | | | | | | | | | | | | | | | | | | | | | | | | |

| REV | DATE | BY | CHK | APP | DESCRIPTION |
|---|---|---|---|---|---|

DESIGNED BY A. CANNON
DRAWN BY E. SUDHAUSEN
CHECKED BY S. BROWN
IN CHARGE R. COFFIN
DATE 12/31/13

**RECORD SET 15% DESIGN SUBMISSION - NOT FOR CONSTRUCTION**

URS | HMM | ARUP
CALIFORNIA HIGH-SPEED TRAIN

CALIFORNIA HIGH-SPEED RAIL AUTHORITY

**CALIFORNIA HIGH-SPEED TRAIN PROJECT**
**FRESNO TO BAKERSFIELD**
HANFORD SUBSECTION
ALIGNMENT H
GRADE SEPARATION PROFILE
S FOWLER AVE

CONTRACT NO. HSR 06-0003
DRAWING NO. CT2122
SCALE AS SHOWN
SHEET NO. 33 OF 60

04/02/2014 - RFP No: HSR13-57

eron.sudhausen 12/27/2013 4:47:22 PM c:\pwworking\hmm\external\eron.sudhausen-arup.com\d0125341\VFB-CT-2122-H.dgn

NOTES:

1. MIN VERTICAL CLEARANCE FOR HST IS 27' FROM TOP OF RAIL

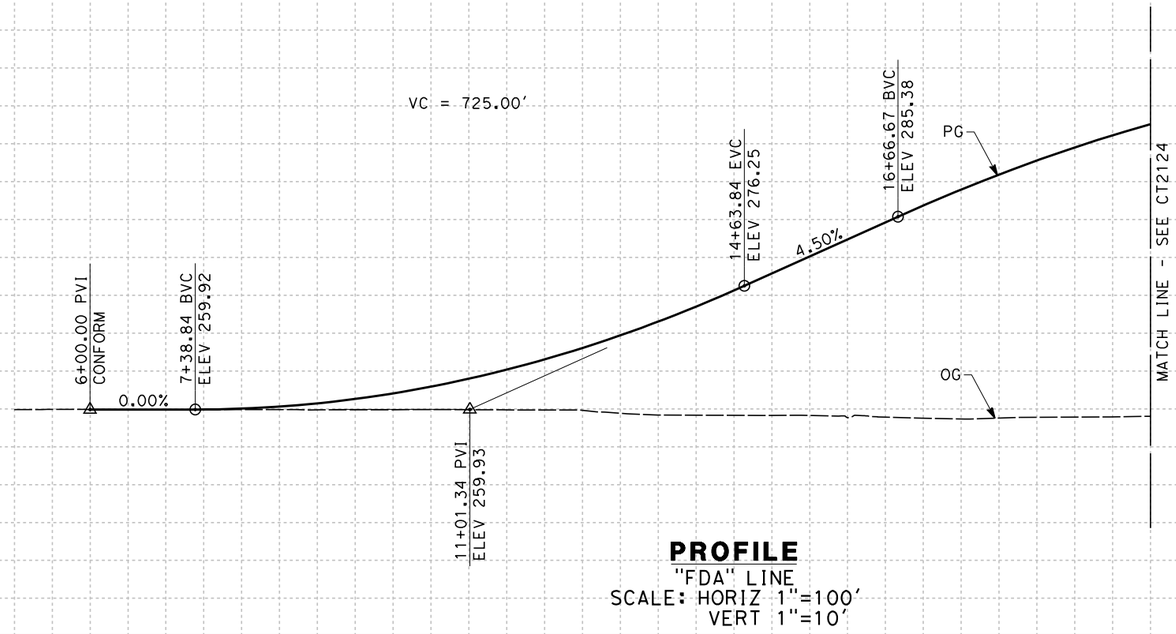


**PROFILE**
"FDA" LINE
SCALE: HORIZ 1"=100'
VERT 1"=10'

| STATION | 5 | 6 | 7 | 8 | 9 | 10 | 1 | 2 | 3 | 4 | 15 | 6 | 7 | 8 | 9 | 20 | TOTAL |
|---|---|---|---|---|---|---|---|---|---|---|---|---|---|---|---|---|---|
| CY Exc | | | | | | | | | | | | | | | | | |
| CY Emb | | | | | | | | | | | | | | | | | |

| REV | DATE | BY | CHK | APP | DESCRIPTION |
|---|---|---|---|---|---|

DESIGNED BY A. CANNON
DRAWN BY E. SUDHAUSEN
CHECKED BY S. BROWN
IN CHARGE R. COFFIN
DATE 12/31/13

**RECORD SET 15% DESIGN SUBMISSION - NOT FOR CONSTRUCTION**

URS | HMM | ARUP
CALIFORNIA HIGH-SPEED TRAIN

CALIFORNIA
HIGH-SPEED RAIL AUTHORITY

**CALIFORNIA HIGH-SPEED TRAIN PROJECT**
**FRESNO TO BAKERSFIELD**
HANFORD SUBSECTION
ALIGNMENT H
GRADE SEPARATION PROFILE
E DAVIS AVE

CONTRACT NO. HSR 06-0003
DRAWING NO. CT2123
SCALE AS SHOWN
SHEET NO. 34 OF 60

RFP No: HSR 13-57
04/02/2014 - RFP No

c:\pwworking\hmm\external\eron.sudhausen-arup.com\d0125341\FB-CT-2123-H.dgn
eron.sudhausen 12/27/2013 4:49:50 PM

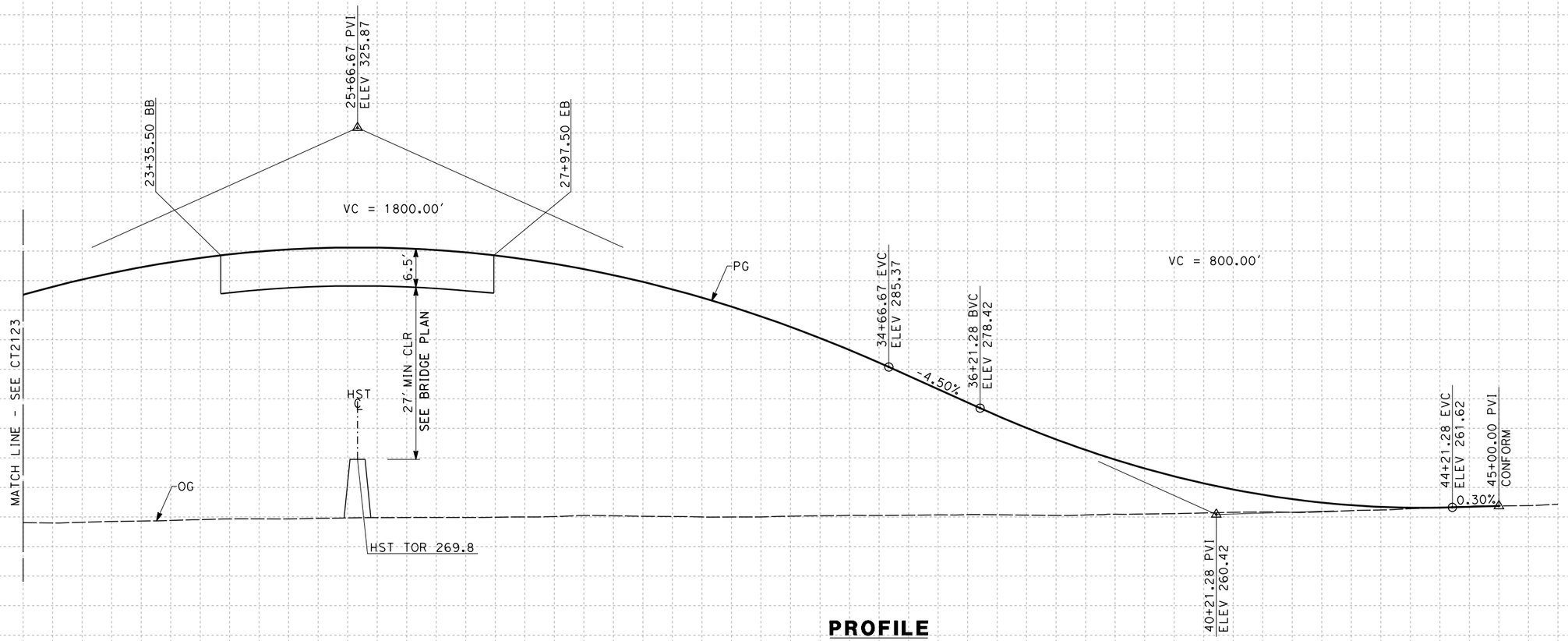


**PROFILE**
"FDA" LINE
SCALE: HORIZ 1"=100'
VERT 1"=10'

| STATION | 20 | 1 | 2 | 3 | 4 | 25 | 6 | 7 | 8 | 9 | 30 | 1 | 2 | 3 | 4 | 35 | 6 | 7 | 8 | 9 | 40 | 1 | 2 | 3 | 4 | 45 | TOTAL |
|---|---|---|---|---|---|---|---|---|---|---|---|---|---|---|---|---|---|---|---|---|---|---|---|---|---|---|---|
| CY Exc | | | | | | | | | | | | | | | | | | | | | | | | | | | |
| CY Emb | | | | | | | | | | | | | | | | | | | | | | | | | | | |

| REV | DATE | BY | CHK | APP | DESCRIPTION |
|---|---|---|---|---|---|

DESIGNED BY A. CANNON
DRAWN BY E. SUDHAUSEN
CHECKED BY S. BROWN
IN CHARGE R. COFFIN
DATE 12/31/13

**RECORD SET 15% DESIGN SUBMISSION - NOT FOR CONSTRUCTION**

URS | HMM | ARUP
CALIFORNIA HIGH-SPEED TRAIN

CALIFORNIA
HIGH-SPEED RAIL AUTHORITY

**CALIFORNIA HIGH-SPEED TRAIN PROJECT**
**FRESNO TO BAKERSFIELD**
HANFORD SUBSECTION
ALIGNMENT H
GRADE SEPARATION PROFILE
E DAVIS AVE

CONTRACT NO. HSR 06-0003
DRAWING NO. CT2124
SCALE AS SHOWN
SHEET NO. 35 OF 60

04/02/2014 - RFP No: HSR 13-57

$FILE$ $TIME$ $DATE$ $USER$

NOTES:

1. MIN VERTICAL CLEARANCE FOR HST IS 27' FROM TOP OF RAIL

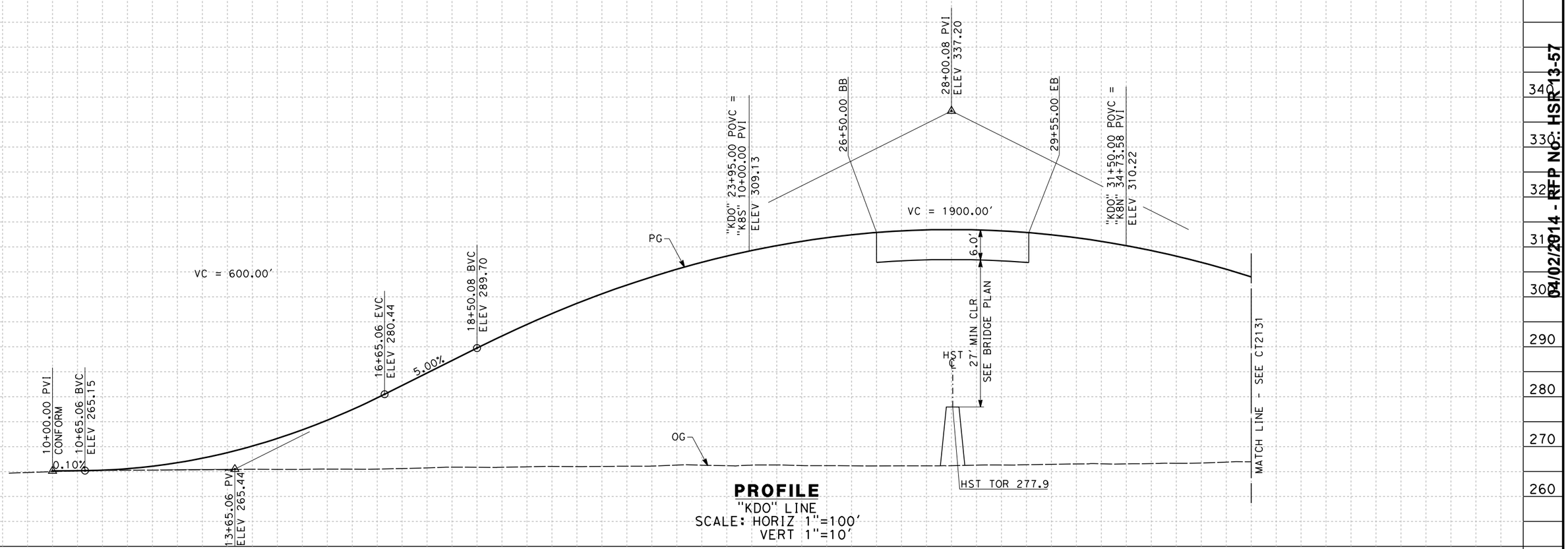


**PROFILE**
"KDO" LINE
SCALE: HORIZ 1"=100'
VERT 1"=10'

| STATION | 10 | 1 | 2 | 3 | 4 | 15 | 6 | 7 | 8 | 9 | 20 | 1 | 2 | 3 | 4 | 25 | 6 | 7 | 8 | 9 | 30 | 1 | 2 | 3 | 4 | TOTAL |
|---|---|---|---|---|---|---|---|---|---|---|---|---|---|---|---|---|---|---|---|---|---|---|---|---|---|---|
| CY Exc | | | | | | | | | | | | | | | | | | | | | | | | | | |
| CY Emb | | | | | | | | | | | | | | | | | | | | | | | | | | |

| REV | DATE | BY | CHK | APP | DESCRIPTION |
|---|---|---|---|---|---|

DESIGNED BY A. CANNON
DRAWN BY E. SUDHAUSEN
CHECKED BY S. BROWN
IN CHARGE R. COFFIN
DATE 12/31/13

**RECORD SET 15% DESIGN SUBMISSION - NOT FOR CONSTRUCTION**

URS | HMM | ARUP
CALIFORNIA HIGH-SPEED TRAIN

CALIFORNIA HIGH-SPEED RAIL AUTHORITY

**CALIFORNIA HIGH-SPEED TRAIN PROJECT**
**FRESNO TO BAKERSFIELD**
HANFORD SUBSECTION
ALIGNMENT H
GRADE SEPARATION PROFILE
DOVER AVE

CONTRACT NO. HSR 06-0003
DRAWING NO. CT2130
SCALE AS SHOWN
SHEET NO. 36 OF 60

04/02/2014 - RFP NO: HSR 13-57

eron.sudhausen 12/27/2013 5:31:00 PM c:\pwworking\hmm\external\eron.sudhausen-arup.com\d0125341\FB-CT-2130-H.dgn

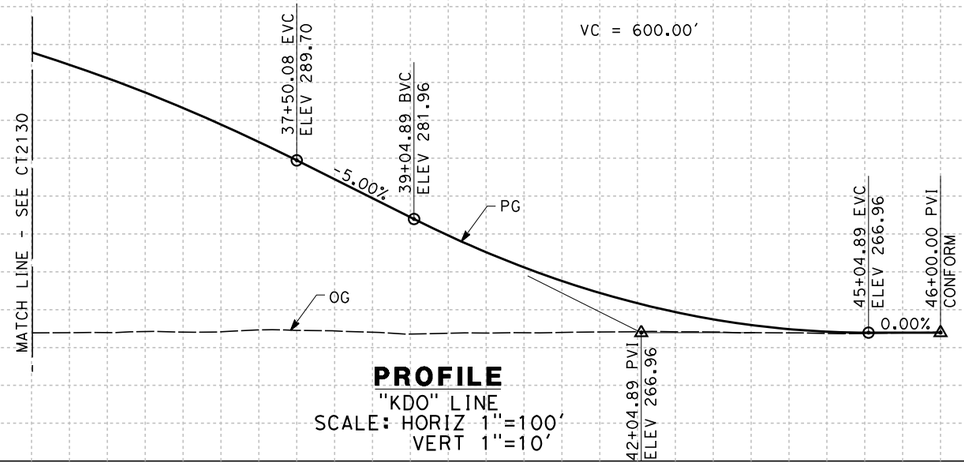


**PROFILE**
"KDO" LINE
SCALE: HORIZ 1"=100'
VERT 1"=10'

| STATION | 4 | 35 | 6 | 7 | 8 | 9 | 40 | 1 | 2 | 3 | 4 | 45 | 6 | TOTAL |
|---|---|---|---|---|---|---|---|---|---|---|---|---|---|---|
| CY Exc | | | | | | | | | | | | | | |
| CY Emb | | | | | | | | | | | | | | |

| REV | DATE | BY | CHK | APP | DESCRIPTION |
|---|---|---|---|---|---|

DESIGNED BY A. CANNON
DRAWN BY E. SUDHAUSEN
CHECKED BY S. BROWN
IN CHARGE R. COFFIN
DATE 12/31/13

**RECORD SET 15% DESIGN SUBMISSION - NOT FOR CONSTRUCTION**

URS | HMM | ARUP
CALIFORNIA HIGH-SPEED TRAIN

CALIFORNIA
HIGH-SPEED RAIL AUTHORITY

**CALIFORNIA HIGH-SPEED TRAIN PROJECT**
**FRESNO TO BAKERSFIELD**
HANFORD SUBSECTION
ALIGNMENT H
GRADE SEPARATION PROFILE
DOVER AVE

CONTRACT NO. HSR 06-0003
DRAWING NO. CT2131
SCALE AS SHOWN
SHEET NO. 37 OF 60

04/02/2014 - RFP No.: HSR 13-57

eron.sudhausen 12/27/2013 4:56:18 PM c:\pwworking\hmm\external\eron.sudhausen-arup.com\d0125341\FB-CT-2131-H.dgn

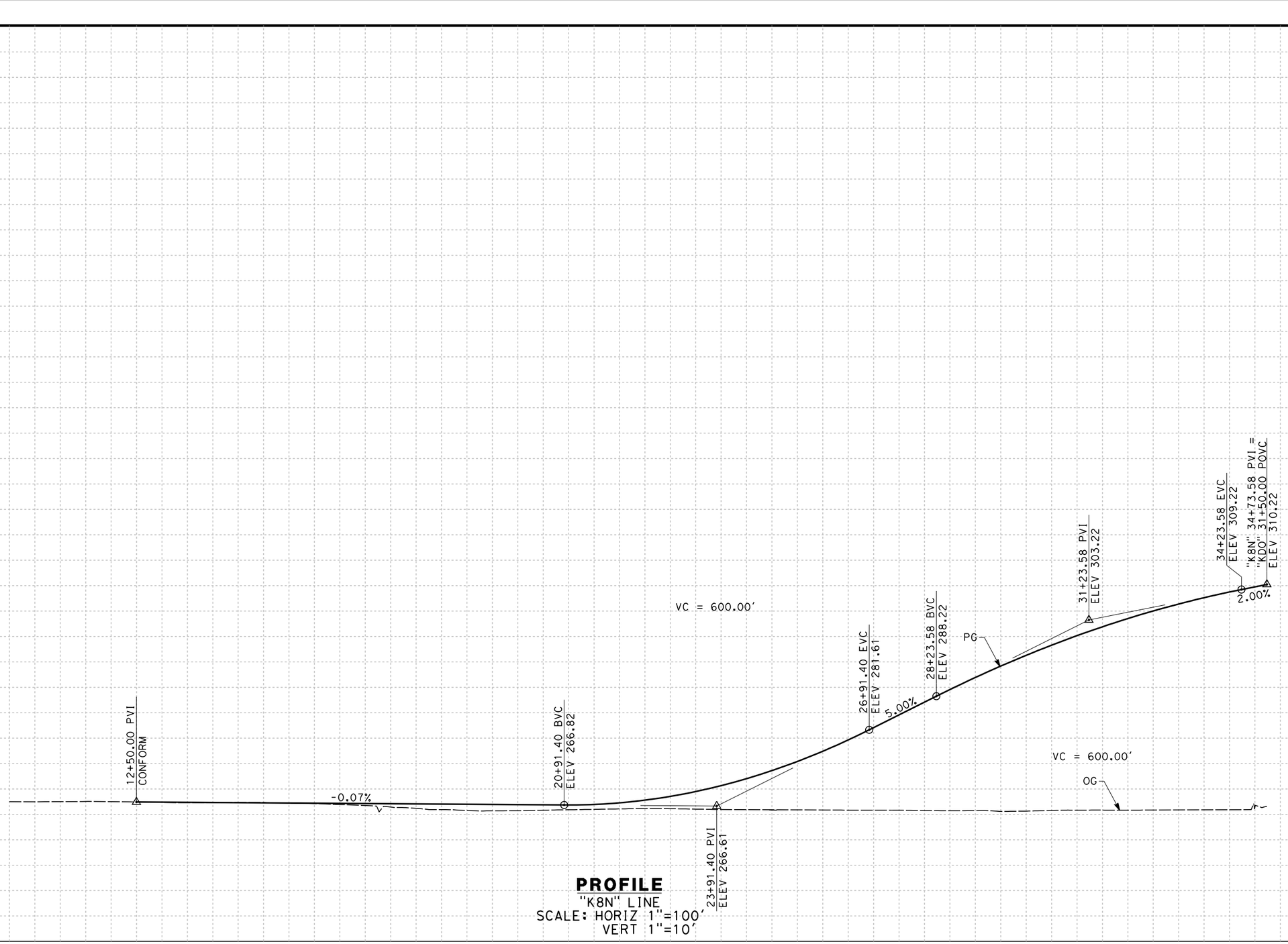


**PROFILE**
"K8N" LINE
SCALE: HORIZ 1"=100'
VERT 1"=10'

| STATION | 10 | 1 | 2 | 3 | 4 | 15 | 6 | 7 | 8 | 9 | 20 | 1 | 2 | 3 | 4 | 25 | 6 | 7 | 8 | 9 | 30 | 1 | 2 | 3 | 4 | TOTAL |
|---|---|---|---|---|---|---|---|---|---|---|---|---|---|---|---|---|---|---|---|---|---|---|---|---|---|---|
| CY Exc | | | | | | | | | | | | | | | | | | | | | | | | | | |
| CY Emb | | | | | | | | | | | | | | | | | | | | | | | | | | |

| REV | DATE | BY | CHK | APP | DESCRIPTION |
|---|---|---|---|---|---|

DESIGNED BY A. CANNON
DRAWN BY E. SUDHAUSEN
CHECKED BY S. BROWN
IN CHARGE R. COFFIN
DATE 12/31/13

**RECORD SET 15% DESIGN SUBMISSION - NOT FOR CONSTRUCTION**

URS | HMM | ARUP
CALIFORNIA HIGH-SPEED TRAIN

CALIFORNIA
HIGH-SPEED RAIL AUTHORITY

**CALIFORNIA HIGH-SPEED TRAIN PROJECT**
**FRESNO TO BAKERSFIELD**
HANFORD SUBSECTION
ALIGNMENT H
GRADE SEPARATION PROFILE
8TH AVE (NORTH)

CONTRACT NO. HSR 06-0003
DRAWING NO. CT2132
SCALE AS SHOWN
SHEET NO. 38 OF 60

RFP NO.: HSR 13-57
04/02/2014 - RFP

c:\pwworking\hmm\external\eron.sudhausen-arup.com\d0125341\FB-CT-2132-H.dgn
12/27/2013 4:58:02 PM
eron.sudhausen

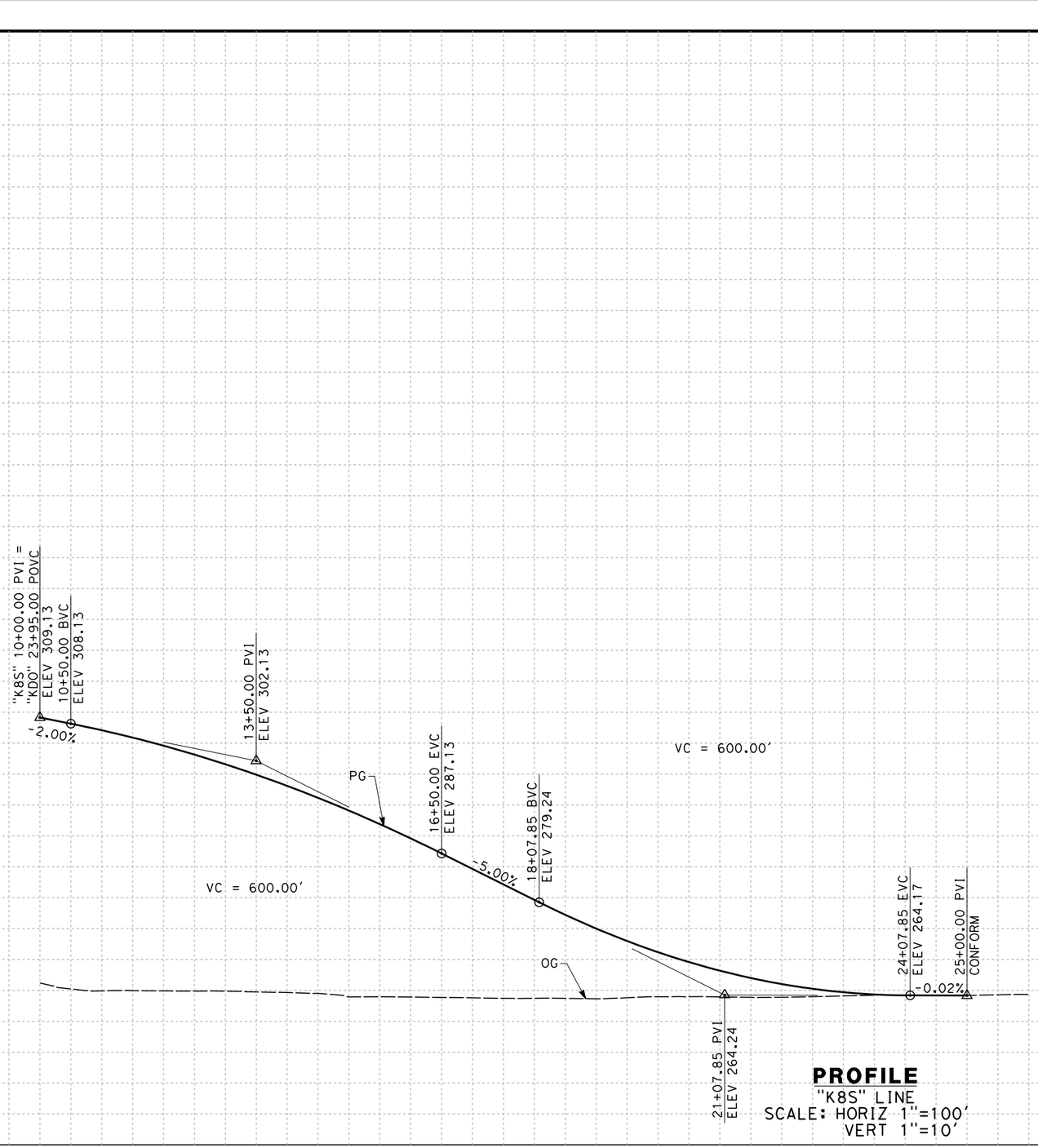


**PROFILE**
"K8S" LINE
SCALE: HORIZ 1"=100'
VERT 1"=10'

| STATION | 10 | 1 | 2 | 3 | 4 | 15 | 6 | 7 | 8 | 9 | 20 | 1 | 2 | 3 | 4 | 25 | 6 | TOTAL |
|---|---|---|---|---|---|---|---|---|---|---|---|---|---|---|---|---|---|---|
| CY Exc | | | | | | | | | | | | | | | | | | |
| CY Emb | | | | | | | | | | | | | | | | | | |

| REV | DATE | BY | CHK | APP | DESCRIPTION |
|---|---|---|---|---|---|

DESIGNED BY A. CANNON
DRAWN BY E. SUDHAUSEN
CHECKED BY S. BROWN
IN CHARGE R. COFFIN
DATE 12/31/13

**RECORD SET 15% DESIGN SUBMISSION - NOT FOR CONSTRUCTION**

URS | HMM | ARUP
CALIFORNIA HIGH-SPEED TRAIN

CALIFORNIA HIGH-SPEED RAIL AUTHORITY

**CALIFORNIA HIGH-SPEED TRAIN PROJECT**
**FRESNO TO BAKERSFIELD**
HANFORD SUBSECTION
ALIGNMENT H
GRADE SEPARATION PROFILE
8TH AVE (SOUTH)

CONTRACT NO. HSR 06-0003
DRAWING NO. CT2133
SCALE AS SHOWN
SHEET NO. 39 OF 60

04/02/2014 - RFP No.: HSR 13-57

eron.sudhausen 12/27/2013 4:59:58 PM c:\pwworking\hmm\external\eron.sudhausen-arup.com\d0125341\FB-CT-2133-H.dgn

NOTES:

1. MIN VERTICAL CLEARANCE FOR HST IS 27' FROM TOP OF RAIL

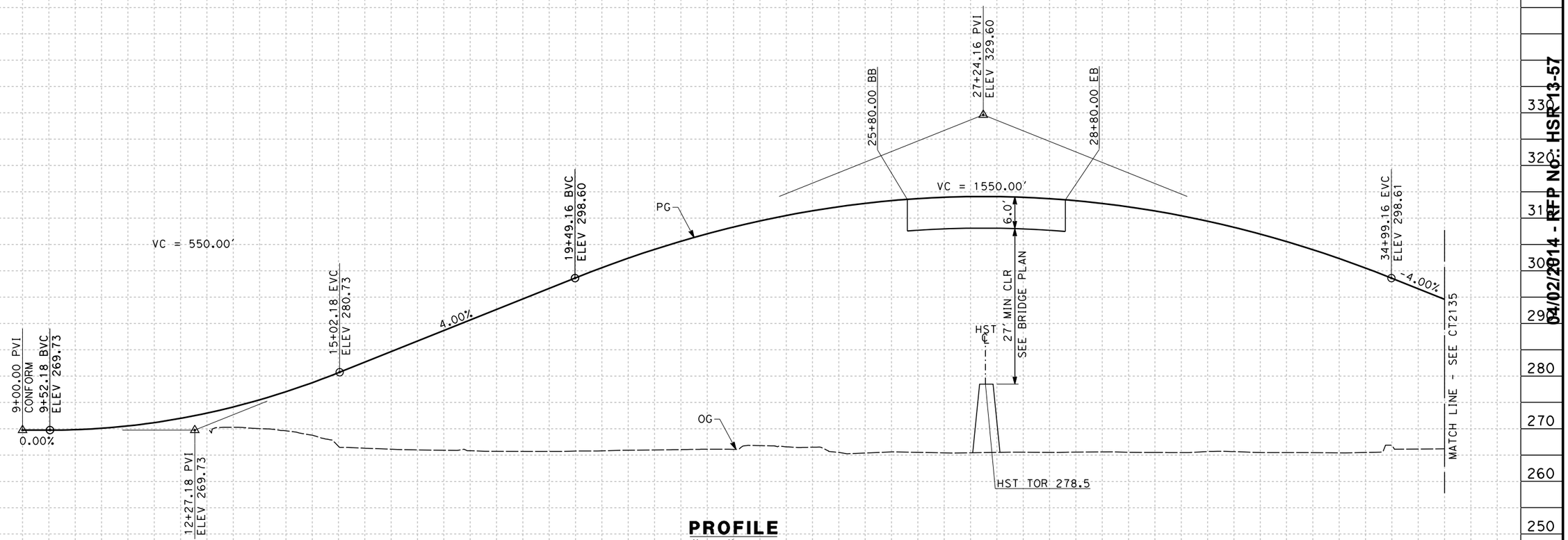


**PROFILE**
"KEX" LINE
SCALE: HORIZ 1"=100'
VERT 1"=10'

| STATION | 9 | 10 | 1 | 2 | 3 | 4 | 15 | 6 | 7 | 8 | 9 | 20 | 1 | 2 | 3 | 4 | 25 | 6 | 7 | 8 | 9 | 30 | 1 | 2 | 3 | 4 | 35 | 6 | TOTAL |
|---|---|---|---|---|---|---|---|---|---|---|---|---|---|---|---|---|---|---|---|---|---|---|---|---|---|---|---|---|---|
| CY Exc | | | | | | | | | | | | | | | | | | | | | | | | | | | | | |
| CY Emb | | | | | | | | | | | | | | | | | | | | | | | | | | | | | |

| REV | DATE | BY | CHK | APP | DESCRIPTION |
|---|---|---|---|---|---|

DESIGNED BY A. CANNON
DRAWN BY E. SUDHAUSEN
CHECKED BY S. BROWN
IN CHARGE R. COFFIN
DATE 12/31/13

**RECORD SET 15% DESIGN SUBMISSION - NOT FOR CONSTRUCTION**

URS | HMM | ARUP
CALIFORNIA HIGH-SPEED TRAIN

CALIFORNIA HIGH-SPEED RAIL AUTHORITY

**CALIFORNIA HIGH-SPEED TRAIN PROJECT**
**FRESNO TO BAKERSFIELD**
HANFORD SUBSECTION
ALIGNMENT H
GRADE SEPARATION PROFILE
EXCELSIOR AVE

CONTRACT NO. HSR 06-0003
DRAWING NO. CT2134
SCALE AS SHOWN
SHEET NO. 40 OF 60

04/02/2014 - RFP No: HSR13-57

eron.sudhausen 12/27/2013 5:35:57 PM c:\pwworking\hmm\external\eron.sudhausen-arup.com\d0125341\FB-CT-2134-H.dgn

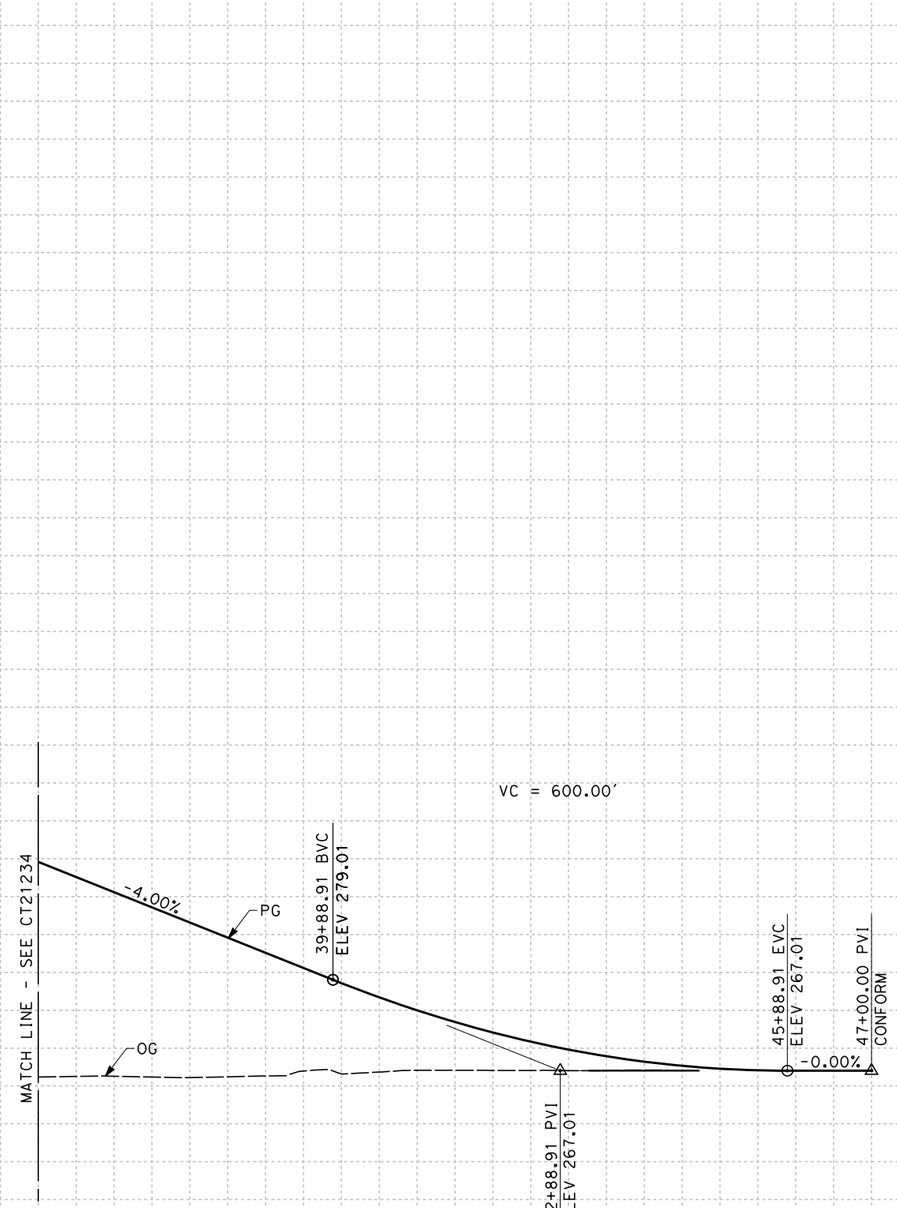


**PROFILE**
"KEX" LINE
SCALE: HORIZ 1"=100'
VERT 1"=10'

| STATION | | 6 | 7 | 8 | 9 | 40 | 1 | 2 | 3 | 4 | 45 | 6 | 7 | TOTAL |
|---|---|---|---|---|---|---|---|---|---|---|---|---|---|---|
| CY | Exc | | | | | | | | | | | | | |
| | Emb | | | | | | | | | | | | | |

| REV | DATE | BY | CHK | APP | DESCRIPTION |
|---|---|---|---|---|---|

DESIGNED BY A. CANNON
DRAWN BY E. SUDHAUSEN
CHECKED BY S. BROWN
IN CHARGE R. COFFIN
DATE 12/31/13

**RECORD SET 15% DESIGN SUBMISSION - NOT FOR CONSTRUCTION**

URS | HMM | ARUP
CALIFORNIA HIGH-SPEED TRAIN

CALIFORNIA HIGH-SPEED RAIL AUTHORITY

**CALIFORNIA HIGH-SPEED TRAIN PROJECT**
**FRESNO TO BAKERSFIELD**
HANFORD SUBSECTION
ALIGNMENT H
GRADE SEPARATION PROFILE
EXCELSIOR AVE

CONTRACT NO. HSR 06-0003
DRAWING NO. CT2135
SCALE AS SHOWN
SHEET NO. 41 OF 60

04/02/2014 - RFP No: HSR 13-57

eron.sudhausen 12/27/2013 5:05:47 PM c:\pwworking\hmm\external\eron.sudhausen-arup.com\d0125341\FB-CT-2135-H.dgn

NOTES:

1. MIN VERTICAL CLEARANCE FOR HST IS 27' FROM TOP OF RAIL

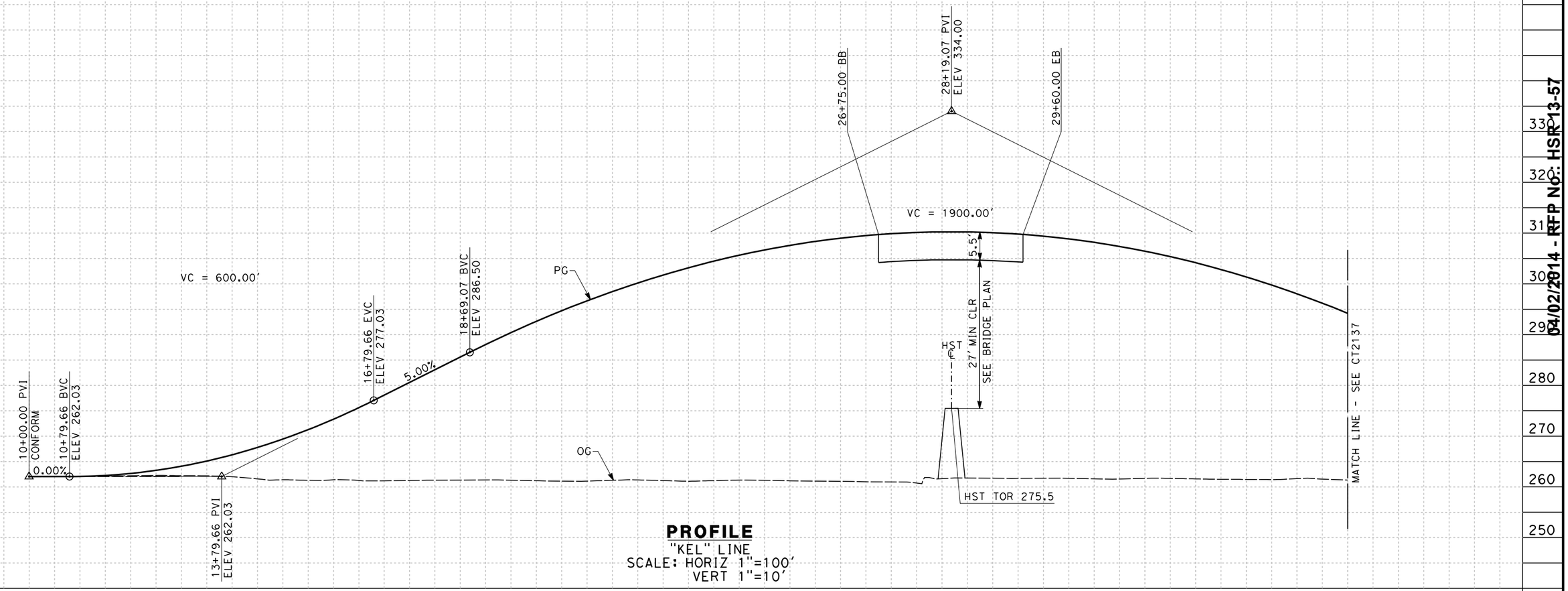


**PROFILE**
"KEL" LINE
SCALE: HORIZ 1"=100'
VERT 1"=10'

| STATION | 10 | 1 | 2 | 3 | 4 | 15 | 6 | 7 | 8 | 9 | 20 | 1 | 2 | 3 | 4 | 25 | 6 | 7 | 8 | 9 | 30 | 1 | 2 | 3 | 4 | 35 | 6 | TOTAL |
|---|---|---|---|---|---|---|---|---|---|---|---|---|---|---|---|---|---|---|---|---|---|---|---|---|---|---|---|---|
| CY Exc | | | | | | | | | | | | | | | | | | | | | | | | | | | | |
| CY Emb | | | | | | | | | | | | | | | | | | | | | | | | | | | | |

| REV | DATE | BY | CHK | APP | DESCRIPTION |
|---|---|---|---|---|---|
| | | | | | |

DESIGNED BY A. CANNON
DRAWN BY E. SUDHAUSEN
CHECKED BY S. BROWN
IN CHARGE R. COFFIN
DATE 12/31/13

**RECORD SET 15% DESIGN SUBMISSION - NOT FOR CONSTRUCTION**

URS | HMM | ARUP
CALIFORNIA HIGH-SPEED TRAIN

CALIFORNIA
HIGH-SPEED RAIL AUTHORITY

# CALIFORNIA HIGH-SPEED TRAIN PROJECT
## FRESNO TO BAKERSFIELD
HANFORD SUBSECTION
ALIGNMENT H
GRADE SEPARATION PROFILE
ELDER AVE

CONTRACT NO. HSR 06-0003
DRAWING NO. CT2136
SCALE AS SHOWN
SHEET NO. 42 OF 60

04/02/2014 - RFP No: HSR13-57

eron.sudhausen 12/27/2013 5:38:10 PM c:\pwworking\hmm\external\eron.sudhausen-arup.com\d0125341\VFB-CT-2136-H.dgn

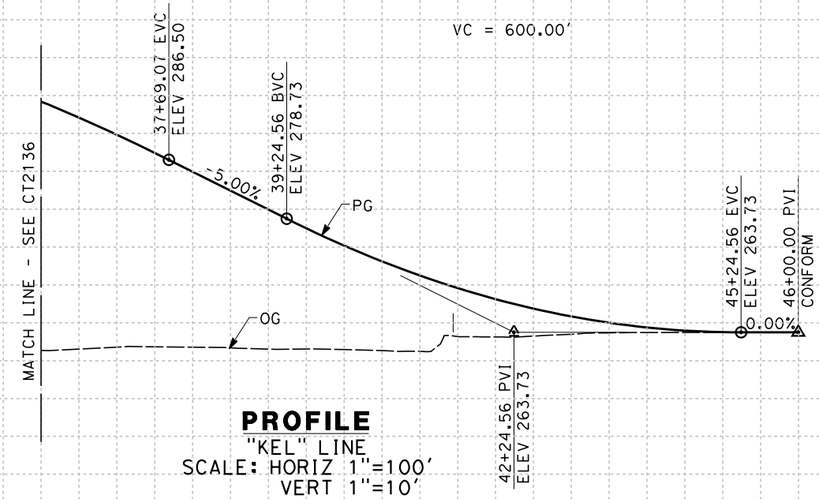


**PROFILE**
"KEL" LINE
SCALE: HORIZ 1"=100'
VERT 1"=10'

| STATION | 6 | 7 | 8 | 9 | 40 | 1 | 2 | 3 | 4 | 45 | 6 | 7 | TOTAL |
|---|---|---|---|---|---|---|---|---|---|---|---|---|---|
| CY Exc | | | | | | | | | | | | | |
| CY Emb | | | | | | | | | | | | | |

| REV | DATE | BY | CHK | APP | DESCRIPTION |
|---|---|---|---|---|---|

DESIGNED BY A. CANNON
DRAWN BY E. SUDHAUSEN
CHECKED BY S. BROWN
IN CHARGE R. COFFIN
DATE 12/31/13

**RECORD SET 15% DESIGN SUBMISSION - NOT FOR CONSTRUCTION**

URS | HMM | ARUP
CALIFORNIA HIGH-SPEED TRAIN

CALIFORNIA
HIGH-SPEED RAIL AUTHORITY

**CALIFORNIA HIGH-SPEED TRAIN PROJECT**
**FRESNO TO BAKERSFIELD**
HANFORD SUBSECTION
ALIGNMENT H
GRADE SEPARATION PROFILE
ELDER AVE

CONTRACT NO. HSR 06-0003
DRAWING NO. CT2137
SCALE AS SHOWN
SHEET NO. 43 OF 60

04/02/2014 - RFP No.: HSR 13-57

eron.sudhausen 12/27/2013 5:11:20 PM c:\pwworking\hmm\external\eron.sudhausen-arup.com\d0125341\FB-CT-2137-H.dgn

NOTES:
1. MIN VERTICAL CLEARANCE FOR HST IS 27' FROM TOP OF RAIL

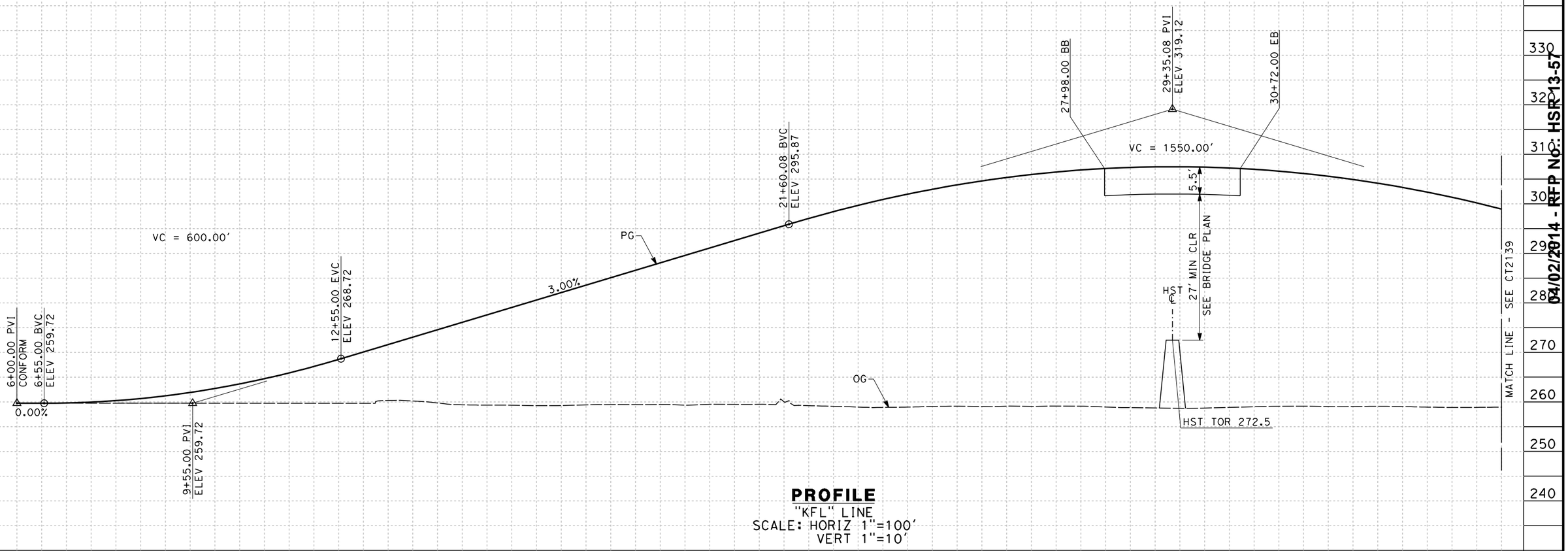


**PROFILE**
"KFL" LINE
SCALE: HORIZ 1"=100'
VERT 1"=10'

| STATION | 7 | 8 | 9 | 10 | 1 | 2 | 3 | 4 | 15 | 6 | 7 | 8 | 9 | 20 | 1 | 2 | 3 | 4 | 25 | 6 | 7 | 8 | 9 | 30 | 1 | 2 | 3 | 4 | 35 | 6 | TOTAL |
|---|---|---|---|---|---|---|---|---|---|---|---|---|---|---|---|---|---|---|---|---|---|---|---|---|---|---|---|---|---|---|---|
| CY Exc | | | | | | | | | | | | | | | | | | | | | | | | | | | | | | | |
| CY Emb | | | | | | | | | | | | | | | | | | | | | | | | | | | | | | | |

| REV | DATE | BY | CHK | APP | DESCRIPTION |
|---|---|---|---|---|---|

DESIGNED BY A. CANNON
DRAWN BY E. SUDHAUSEN
CHECKED BY S. BROWN
IN CHARGE R. COFFIN
DATE 12/31/13

**RECORD SET 15% DESIGN SUBMISSION - NOT FOR CONSTRUCTION**

URS | HMM | ARUP
CALIFORNIA HIGH-SPEED TRAIN

CALIFORNIA
HIGH-SPEED RAIL AUTHORITY

**CALIFORNIA HIGH-SPEED TRAIN PROJECT**
**FRESNO TO BAKERSFIELD**
HANFORD SUBSECTION
ALIGNMENT H
GRADE SEPARATION PROFILE
FLINT AVE

CONTRACT NO. HSR 06-0003
DRAWING NO. CT2138
SCALE AS SHOWN
SHEET NO. 44 OF 60

04/02/2014 - RFP No: HSR13-57

eron.sudhausen 12/27/2013 5:14:59 PM c:\pwworking\hmm\external\eron.sudhausen-arup.com\d0125341\FB-CT-2138-H.dgn

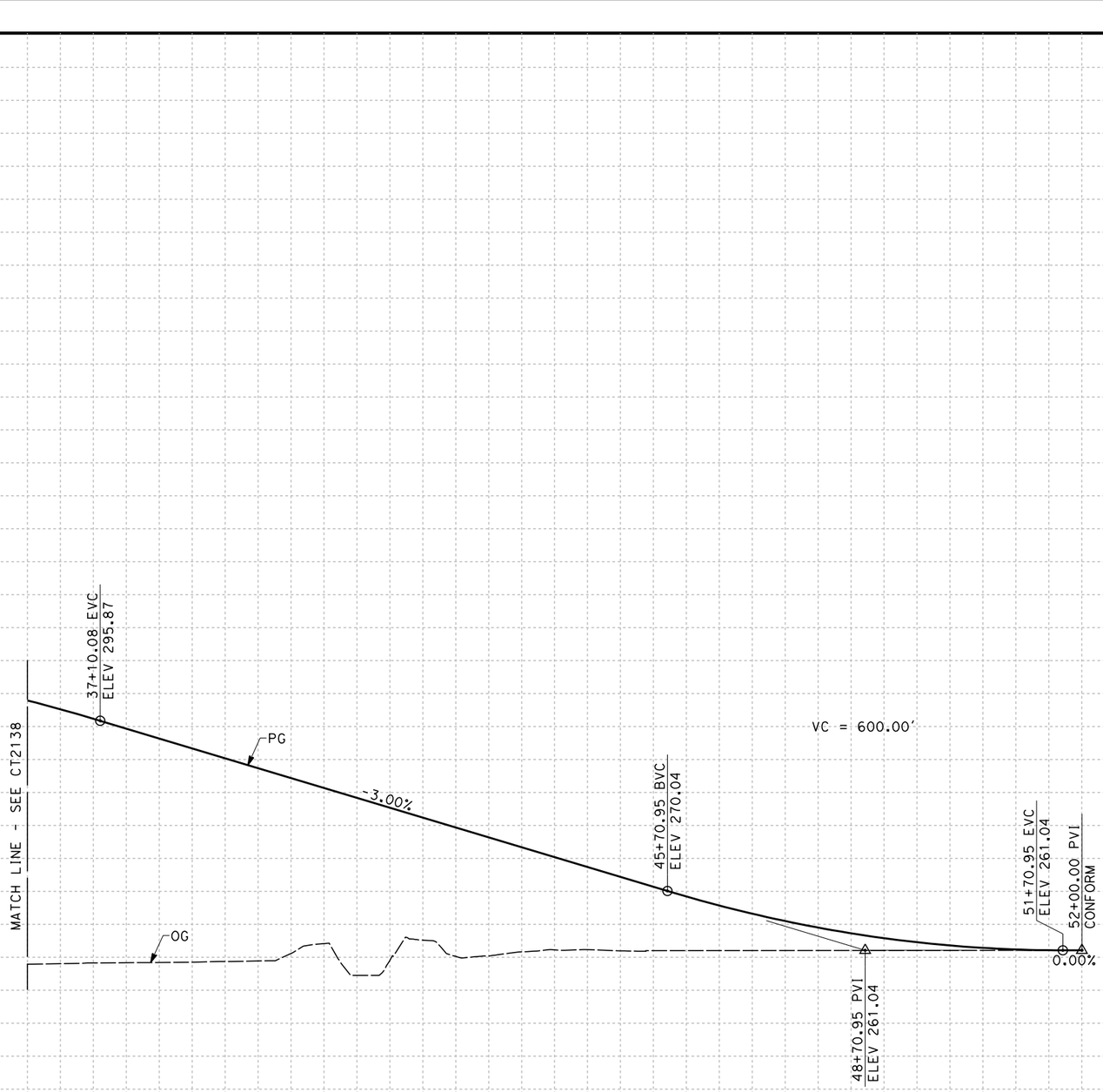


**PROFILE**
"KFL" LINE
SCALE: HORIZ 1"=100'
VERT 1"=10'

| STATION | | 6 | 7 | 8 | 9 | 40 | 1 | 2 | 3 | 4 | 45 | 6 | 7 | 8 | 9 | 50 | 1 | 2 | TOTAL |
|---|---|---|---|---|---|---|---|---|---|---|---|---|---|---|---|---|---|---|---|
| CY | Exc | | | | | | | | | | | | | | | | | | |
| | Emb | | | | | | | | | | | | | | | | | | |

| REV | DATE | BY | CHK | APP | DESCRIPTION |
|---|---|---|---|---|---|

DESIGNED BY A. CANNON
DRAWN BY E. SUDHAUSEN
CHECKED BY S. BROWN
IN CHARGE R. COFFIN
DATE 12/31/13

**RECORD SET 15% DESIGN SUBMISSION - NOT FOR CONSTRUCTION**

URS | HMM | ARUP
California High-Speed Train

CALIFORNIA HIGH-SPEED RAIL AUTHORITY

**CALIFORNIA HIGH-SPEED TRAIN PROJECT**
**FRESNO TO BAKERSFIELD**
HANFORD SUBSECTION
ALIGNMENT H
GRADE SEPARATION PROFILE
FLINT AVE

CONTRACT NO. HSR 06-0003
DRAWING NO. CT2139
SCALE AS SHOWN
SHEET NO. 45 OF 60

04/02/2014 - RFP No: HSR 13-57

eron.sudhausen 12/27/2013 5:43:36 PM c:\pwworking\hmm\external\eron.sudhausen-arup.com\d0125341\VFB-CT-2139-H.dgn

NOTES:

1. MIN VERTICAL CLEARANCE FOR HST IS 27' FROM TOP OF RAIL

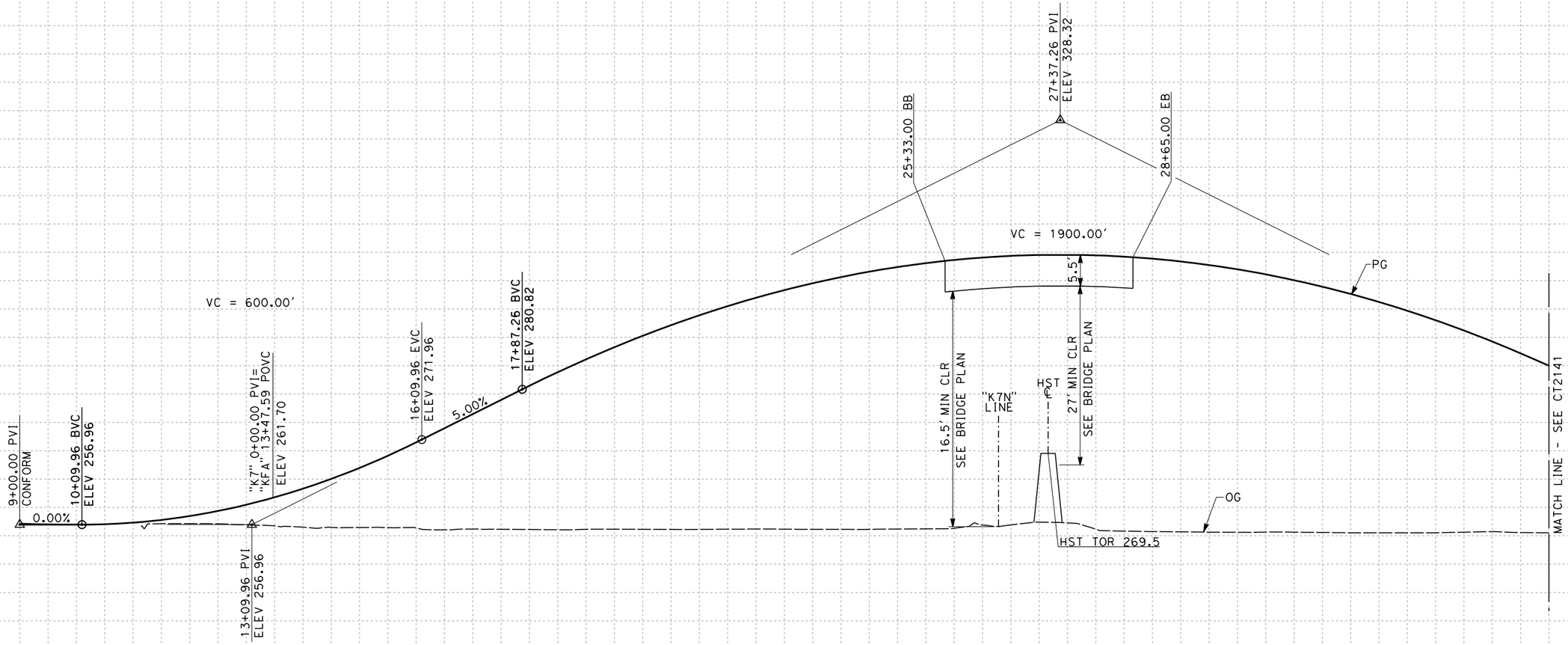


**PROFILE**
"KFA" LINE
SCALE: HORIZ 1"=100'
VERT 1"=10'

| STATION | 9 | 10 | 1 | 2 | 3 | 4 | 15 | 6 | 7 | 8 | 9 | 20 | 1 | 2 | 3 | 4 | 25 | 6 | 7 | 8 | 9 | 30 | 1 | 2 | 3 | 4 | 35 | 6 | TOTAL |
|---|---|---|---|---|---|---|---|---|---|---|---|---|---|---|---|---|---|---|---|---|---|---|---|---|---|---|---|---|---|
| CY Exc | | | | | | | | | | | | | | | | | | | | | | | | | | | | | |
| CY Emb | | | | | | | | | | | | | | | | | | | | | | | | | | | | | |

| REV | DATE | BY | CHK | APP | DESCRIPTION |
|---|---|---|---|---|---|

DESIGNED BY A. CANNON
DRAWN BY E. SUDHAUSEN
CHECKED BY S. BROWN
IN CHARGE R. COFFIN
DATE 12/31/13

**RECORD SET 15% DESIGN SUBMISSION - NOT FOR CONSTRUCTION**

URS | HMM | ARUP
California High-Speed Train

CALIFORNIA HIGH-SPEED RAIL AUTHORITY

**CALIFORNIA HIGH-SPEED TRAIN PROJECT**
**FRESNO TO BAKERSFIELD**
HANFORD SUBSECTION
ALIGNMENT H
GRADE SEPARATION PROFILE
FARGO AVE

CONTRACT NO. HSR 06-0003
DRAWING NO. CT2140
SCALE AS SHOWN
SHEET NO. 46 OF 60

RFP No: HSR 13-57
04/02/2014 - RFP

$FILE$ $TIME$ $DATE$ $USER$

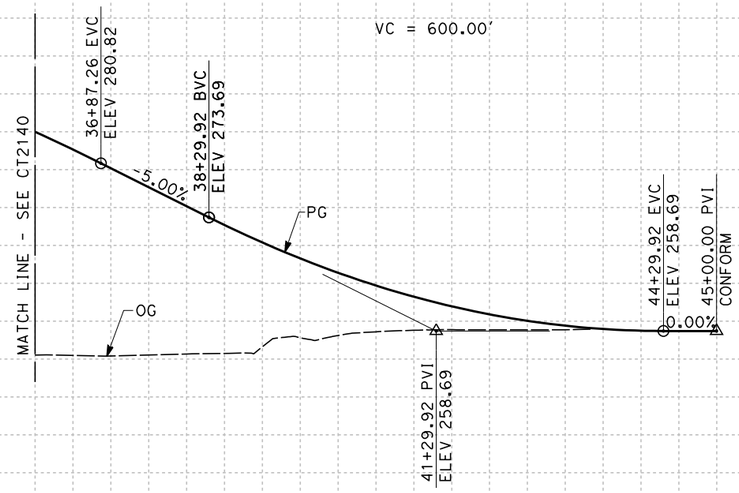


**PROFILE**
"KFA" LINE
SCALE: HORIZ 1"=100'
VERT 1"=10'

| STATION | | 6 | 7 | 8 | 9 | 40 | 1 | 2 | 3 | 4 | 5 | TOTAL |
|---|---|---|---|---|---|---|---|---|---|---|---|---|
| CY | Exc | | | | | | | | | | | |
| | Emb | | | | | | | | | | | |

| REV | DATE | BY | CHK | APP | DESCRIPTION |
|---|---|---|---|---|---|

DESIGNED BY A. CANNON
DRAWN BY E. SUDHAUSEN
CHECKED BY S. BROWN
IN CHARGE R. COFFIN
DATE 12/31/13

**RECORD SET 15% DESIGN SUBMISSION - NOT FOR CONSTRUCTION**

URS | HMM | ARUP
CALIFORNIA HIGH-SPEED TRAIN

CALIFORNIA HIGH-SPEED RAIL AUTHORITY

**CALIFORNIA HIGH-SPEED TRAIN PROJECT**
**FRESNO TO BAKERSFIELD**
HANFORD SUBSECTION
ALIGNMENT H
GRADE SEPARATION PROFILE
FARGO AVE

CONTRACT NO. HSR 06-0003
DRAWING NO. CT2141
SCALE AS SHOWN
SHEET NO. 47 OF 60

04/02/2014 - RFP No: HSR 13-57

eron.sudhausen 12/27/2013 5:58:54 PM c:\pwworking\hmm\external\eron.sudhausen-arup.com\d0125341\FB-CT-2141-H.dgn

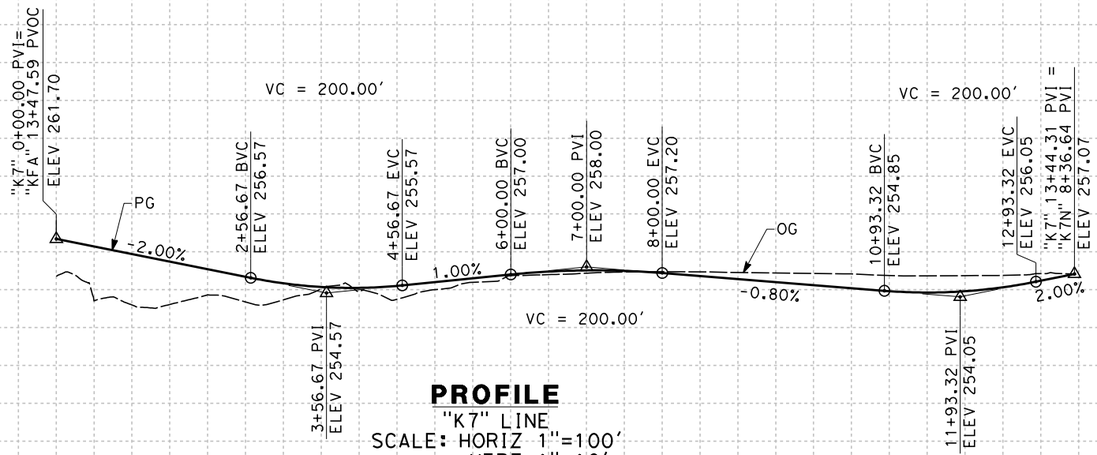


## PROFILE

"K7" LINE
SCALE: HORIZ 1"=100'
VERT 1"=10'

| STATION | 0 | 1 | 2 | 3 | 4 | 5 | 6 | 7 | 8 | 9 | 10 | 1 | 2 | 3 | 4 | TOTAL |
|---|---|---|---|---|---|---|---|---|---|---|---|---|---|---|---|---|
| CY Exc | | | | | | | | | | | | | | | | |
| CY Emb | | | | | | | | | | | | | | | | |

| REV | DATE | BY | CHK | APP | DESCRIPTION |
|---|---|---|---|---|---|

DESIGNED BY A. CANNON
DRAWN BY E. SUDHAUSEN
CHECKED BY S. BROWN
IN CHARGE R. COFFIN
DATE 12/31/13

**RECORD SET 15% DESIGN SUBMISSION - NOT FOR CONSTRUCTION**

URS | HMM | ARUP
CALIFORNIA HIGH-SPEED TRAIN

CALIFORNIA HIGH-SPEED RAIL AUTHORITY

# CALIFORNIA HIGH-SPEED TRAIN PROJECT
# FRESNO TO BAKERSFIELD

HANFORD SUBSECTION
ALIGNMENT H
GRADE SEPARATION PROFILE
7 1/2 AVE CONNECTOR

CONTRACT NO. HSR 06-0003
DRAWING NO. CT2142
SCALE AS SHOWN
SHEET NO. 48 OF 60

04/02/2014 - RFP No.: HSR 13-57

eron.sudhausen 12/27/2013 6:01:07 PM c:\pwworking\hmm\external\eron.sudhausen-arup.com\d0125341\FB-CT-2142-H.dgn

NOTES:

1. MINIMUM VERTICAL CLEARANCE OVER LOCAL STREET IS 16.5' FROM ROAD SURFACE.

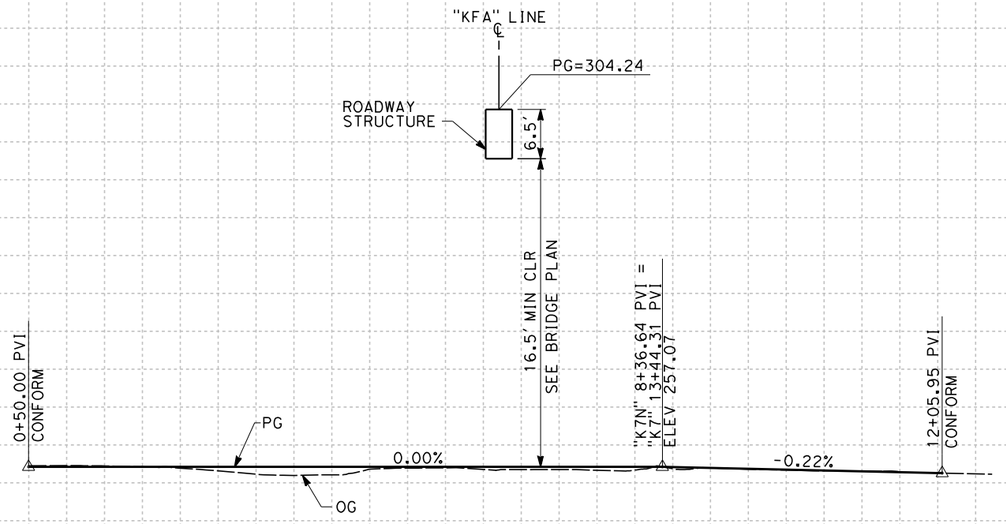


## PROFILE

"K7N" LINE
SCALE: HORIZ 1"=100'
VERT 1"=10'

| STATION | | 0 | 1 | 2 | 3 | 4 | 5 | 6 | 7 | 8 | 9 | 10 | 1 | 2 | TOTAL |
|---|---|---|---|---|---|---|---|---|---|---|---|---|---|---|---|
| CY | Exc | | | | | | | | | | | | | | |
| | Emb | | | | | | | | | | | | | | |

| REV | DATE | BY | CHK | APP | DESCRIPTION |
|---|---|---|---|---|---|

DESIGNED BY A. CANNON
DRAWN BY E. SUDHAUSEN
CHECKED BY S. BROWN
IN CHARGE R. COFFIN
DATE 12/31/13

**RECORD SET 15% DESIGN SUBMISSION - NOT FOR CONSTRUCTION**

URS | HMM | ARUP
CALIFORNIA HIGH-SPEED TRAIN

CALIFORNIA HIGH-SPEED RAIL AUTHORITY

**CALIFORNIA HIGH-SPEED TRAIN PROJECT**
**FRESNO TO BAKERSFIELD**
HANFORD SUBSECTION
ALIGNMENT H
GRADE SEPARATION PROFILE
7½AVE

CONTRACT NO. HSR 06-0003
DRAWING NO. CT2143
SCALE AS SHOWN
SHEET NO. 49 OF 60

04/02/2014 - RFP No.: HSR 13-57

eron.sudhausen 12/27/2013 6:18:56 PM c:\pwworking\hmm\external\eron.sudhausen-arup.com\d0125341\FB-CT-2143-H.dgn

NOTES:
1. MINIMUM VERTICAL CLEARANCE OVER HST IS 27' FROM TOP OF RAIL

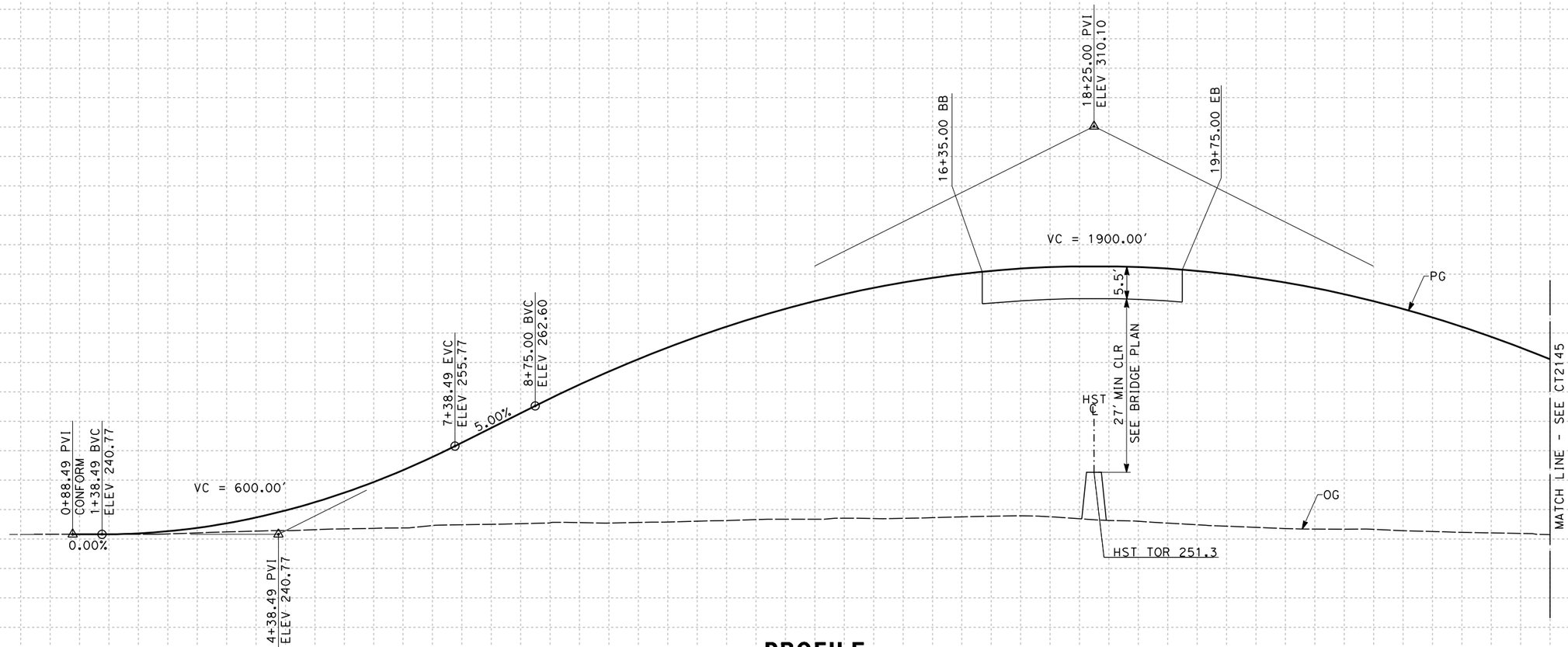


**PROFILE**
"KHA" LINE
SCALE: HORIZ 1"=100'
VERT 1"=10'

| STATION | | 0 | 1 | 2 | 3 | 4 | 5 | 6 | 7 | 8 | 9 | 10 | 1 | 2 | 3 | 4 | 15 | 6 | 7 | 8 | 9 | 20 | 1 | 2 | 3 | 4 | 25 | 6 | TOTAL |
|---|---|---|---|---|---|---|---|---|---|---|---|---|---|---|---|---|---|---|---|---|---|---|---|---|---|---|---|---|---|
| CY | Exc | | | | | | | | | | | | | | | | | | | | | | | | | | | | |
| | Emb | | | | | | | | | | | | | | | | | | | | | | | | | | | | |

| REV | DATE | BY | CHK | APP | DESCRIPTION |
|---|---|---|---|---|---|
| | | | | | |

DESIGNED BY A. CANNON
DRAWN BY E. SUDHAUSEN
CHECKED BY S. BROWN
IN CHARGE R. COFFIN
DATE 12/31/13

**RECORD SET 15% DESIGN SUBMISSION - NOT FOR CONSTRUCTION**

URS | HMM | ARUP
CALIFORNIA HIGH-SPEED TRAIN

CALIFORNIA
HIGH-SPEED RAIL AUTHORITY

**CALIFORNIA HIGH-SPEED TRAIN PROJECT**
**FRESNO TO BAKERSFIELD**
HANFORD SUBSECTION
ALIGNMENT H
GRADE SEPARATION PROFILE
HANFORD ARMONA RD

CONTRACT NO. HSR 06-0003
DRAWING NO. CT2144
SCALE AS SHOWN
SHEET NO. 50 OF 60

04/02/2014 - RFP No: HSR13-57

eron.sudhausen 12/27/2013 6:22:35 PM c:\pwworking\hmm\external\eron.sudhausen-arup.com\d0125341\FB-CT-2144-H.dgn

eron.sudhausen 12/27/2013 6:51:37 PM c:\pwworking\hmm\external\eron.sudhausen-arup.com\d0125341\FB-CT-2145-H.dgn

04/02/2014 - RFP No: HSR 13-57

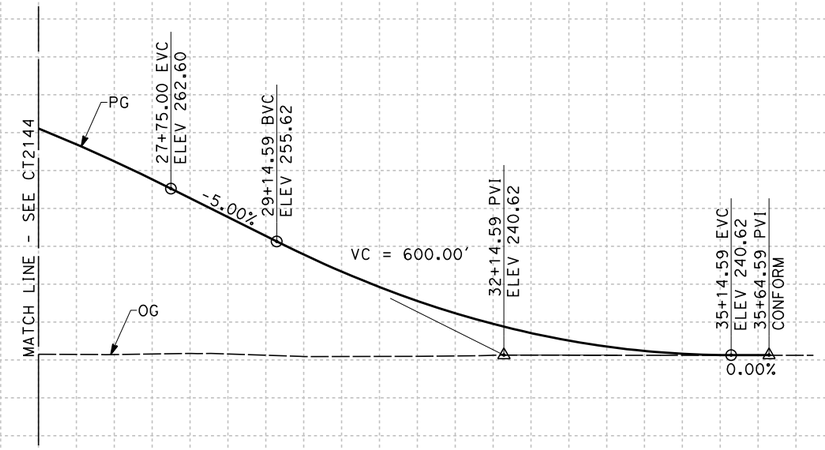


## PROFILE

"KHA" LINE
SCALE: HORIZ 1"=100'
VERT 1"=10'

| STATION | 6 | 7 | 8 | 9 | 30 | 1 | 2 | 3 | 4 | 35 | 6 | TOTAL |
|---|---|---|---|---|---|---|---|---|---|---|---|---|
| CY Exc | | | | | | | | | | | | |
| CY Emb | | | | | | | | | | | | |

| REV | DATE | BY | CHK | APP | DESCRIPTION |
|---|---|---|---|---|---|

DESIGNED BY A. CANNON
DRAWN BY E. SUDHAUSEN
CHECKED BY S. BROWN
IN CHARGE R. COFFIN
DATE 12/31/13

**RECORD SET 15% DESIGN SUBMISSION - NOT FOR CONSTRUCTION**

URS | HMM | ARUP
CALIFORNIA HIGH-SPEED TRAIN

CALIFORNIA HIGH-SPEED RAIL AUTHORITY

**CALIFORNIA HIGH-SPEED TRAIN PROJECT**
**FRESNO TO BAKERSFIELD**
HANFORD SUBSECTION
ALIGNMENT H
GRADE SEPARATION PROFILE
HANFORD ARMONA RD

CONTRACT NO. HSR 06-0003
DRAWING NO. CT2145
SCALE AS SHOWN
SHEET NO. 51 OF 60

NOTES:
1. MINIMUM VERTICAL CLEARANCE OVER HST IS 27' FROM TOP OF RAIL

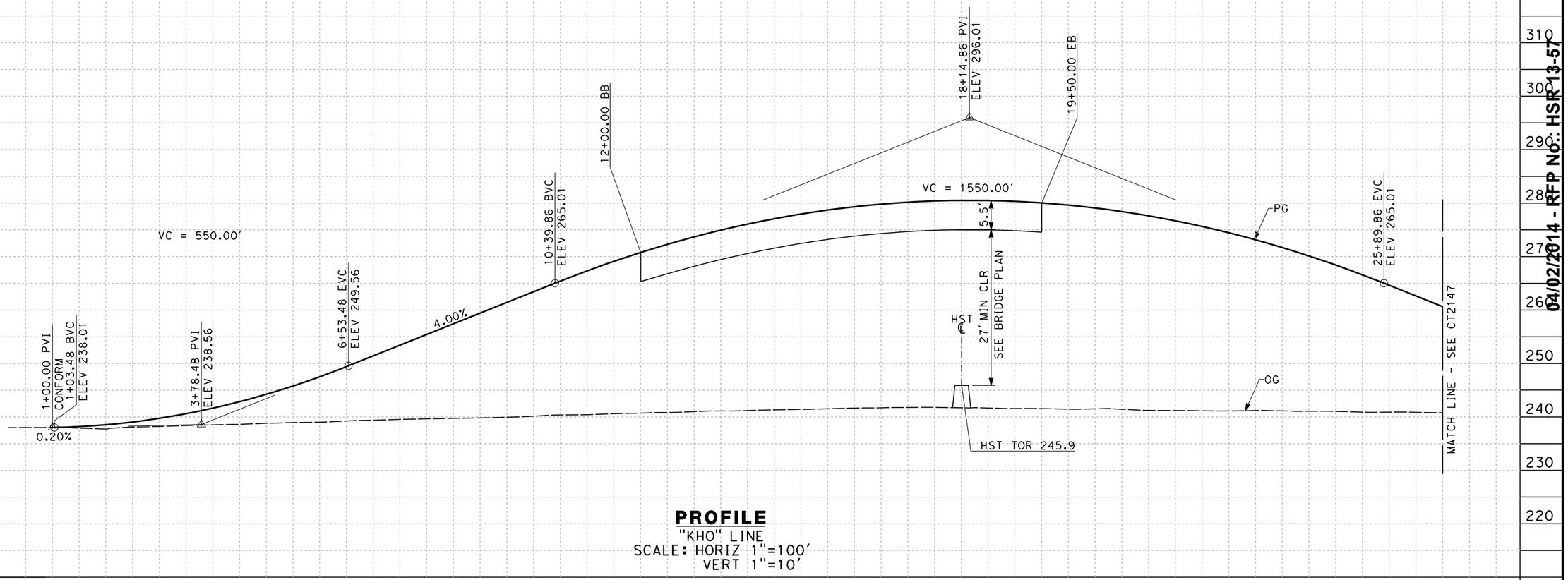


**PROFILE**
"KHO" LINE
SCALE: HORIZ 1"=100'
VERT 1"=10'

| STATION | 0 | 1 | 2 | 3 | 4 | 5 | 6 | 7 | 8 | 9 | 10 | 1 | 2 | 3 | 4 | 15 | 6 | 7 | 8 | 9 | 20 | 1 | 2 | 3 | 4 | 25 | 6 | 7 | TOTAL |
|---|---|---|---|---|---|---|---|---|---|---|---|---|---|---|---|---|---|---|---|---|---|---|---|---|---|---|---|---|---|
| CY Exc | | | | | | | | | | | | | | | | | | | | | | | | | | | | | |
| CY Emb | | | | | | | | | | | | | | | | | | | | | | | | | | | | | |

| REV | DATE | BY | CHK | APP | DESCRIPTION |
|---|---|---|---|---|---|

DESIGNED BY A. CANNON
DRAWN BY E. SUDHAUSEN
CHECKED BY S. BROWN
IN CHARGE R. COFFIN
DATE 12/31/13

**RECORD SET 15% DESIGN SUBMISSION - NOT FOR CONSTRUCTION**

URS | HMM | ARUP
CALIFORNIA HIGH-SPEED TRAIN

CALIFORNIA
HIGH-SPEED RAIL AUTHORITY

**CALIFORNIA HIGH-SPEED TRAIN PROJECT**
**FRESNO TO BAKERSFIELD**
HANFORD SUBSECTION
ALIGNMENT H
GRADE SEPARATION PROFILE
HOUSTON AVE

CONTRACT NO. HSR 06-0003
DRAWING NO. CT2146
SCALE AS SHOWN
SHEET NO. 52 OF 60

RFP No. HSR13-57
04/02/2014 - RFP No.

eron.sudhausen 12/27/2013 7:01:52 PM c:\pwworking\hmm\external\eron.sudhausen-arup.com\d0125341\FB-CT-2146-H.dgn

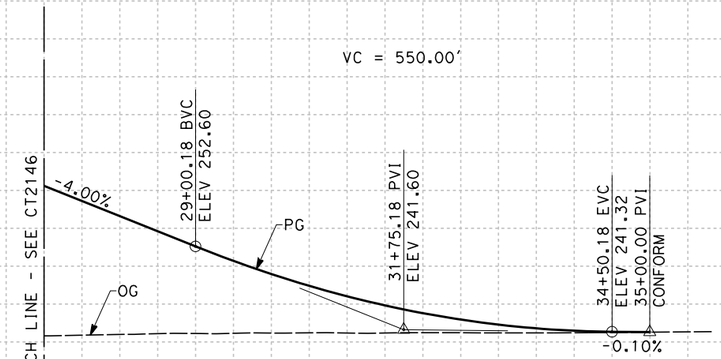


**PROFILE**
"KHO" LINE
SCALE: HORIZ 1"=100'
VERT 1"=10'

| STATION | | 7 | 8 | 9 | 30 | 1 | 2 | 3 | 4 | 35 | TOTAL |
|---|---|---|---|---|---|---|---|---|---|---|---|
| CY | Exc | | | | | | | | | | |
| | Emb | | | | | | | | | | |

| REV | DATE | BY | CHK | APP | DESCRIPTION |
|---|---|---|---|---|---|

DESIGNED BY A. CANNON
DRAWN BY E. SUDHAUSEN
CHECKED BY S. BROWN
IN CHARGE R. COFFIN
DATE 12/31/13

**RECORD SET 15% DESIGN SUBMISSION - NOT FOR CONSTRUCTION**

URS | HMM | ARUP
CALIFORNIA HIGH-SPEED TRAIN

CALIFORNIA HIGH-SPEED RAIL AUTHORITY

**CALIFORNIA HIGH-SPEED TRAIN PROJECT**
**FRESNO TO BAKERSFIELD**
HANFORD SUBSECTION
ALIGNMENT H
GRADE SEPARATION PROFILE
HOUSTON AVE

CONTRACT NO. HSR 06-0003
DRAWING NO. CT2147
SCALE AS SHOWN
SHEET NO. 53 OF 60

04/02/2014 - RFP No.: HSR13-57

eron.sudhausen 12/27/2013 7:29:42 PM c:\pwworking\hmm\external\eron.sudhausen-arup.com\d0125341\FB-CT-2147-H.dgn

NOTES:

1. MIN VERTICAL CLEARANCE FOR HST IS 27' FROM TOP OF RAIL

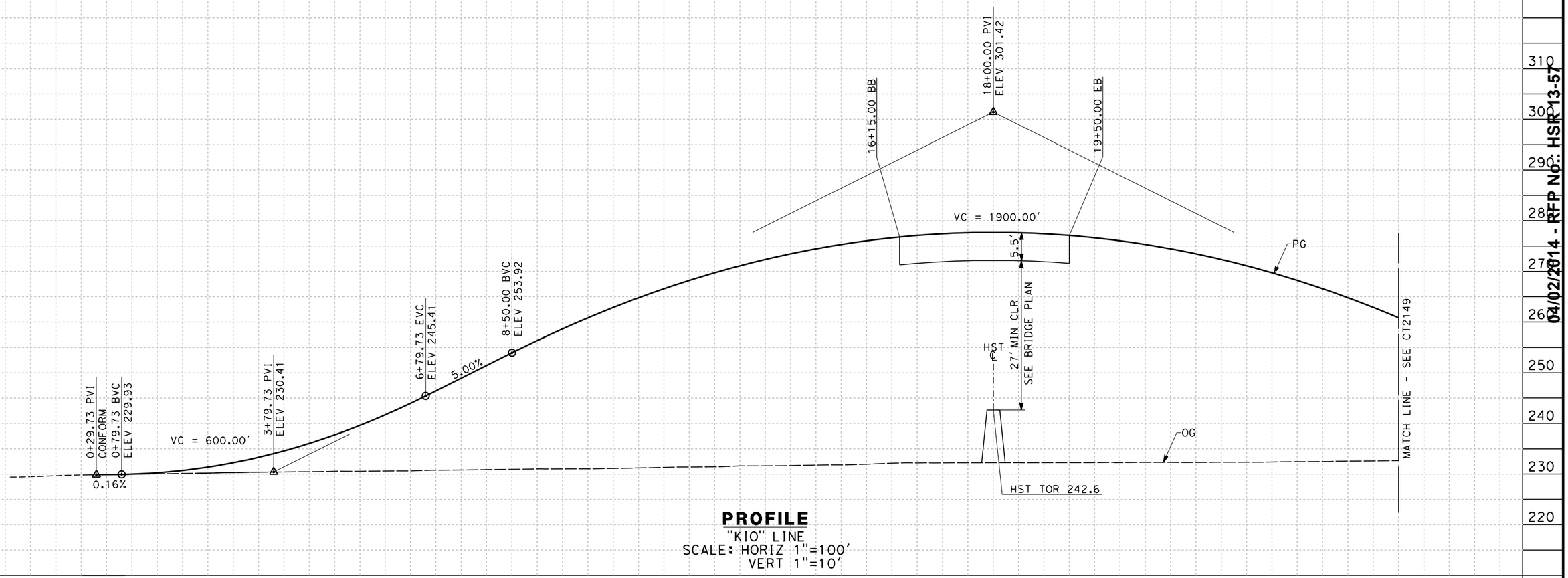


**PROFILE**

"KIO" LINE

SCALE: HORIZ 1"=100'

VERT 1"=10'

| STATION | 0 | 1 | 2 | 3 | 4 | 5 | 6 | 7 | 8 | 9 | 10 | 1 | 2 | 3 | 4 | 15 | 6 | 7 | 8 | 9 | 20 | 1 | 2 | 3 | 4 | 25 | 6 | TOTAL |
|---|---|---|---|---|---|---|---|---|---|---|---|---|---|---|---|---|---|---|---|---|---|---|---|---|---|---|---|---|
| CY Exc | | | | | | | | | | | | | | | | | | | | | | | | | | | | |
| CY Emb | | | | | | | | | | | | | | | | | | | | | | | | | | | | |

| REV | DATE | BY | CHK | APP | DESCRIPTION |
|---|---|---|---|---|---|

DESIGNED BY: A. CANNON
DRAWN BY: E. SUDHAUSEN
CHECKED BY: S. BROWN
IN CHARGE: R. COFFIN
DATE: 12/31/13

**RECORD SET 15% DESIGN SUBMISSION - NOT FOR CONSTRUCTION**

URS | HMM | ARUP
CALIFORNIA HIGH-SPEED TRAIN

CALIFORNIA
HIGH-SPEED RAIL AUTHORITY

**CALIFORNIA HIGH-SPEED TRAIN PROJECT**
**FRESNO TO BAKERSFIELD**
HANFORD SUBSECTION
ALIGNMENT H
GRADE SEPARATION PROFILE
IONA AVE

CONTRACT NO.: HSR 06-0003
DRAWING NO.: CT2148
SCALE: AS SHOWN
SHEET NO.: 54 OF 60

04/02/2014 - RFP No. HSR13-57

eron.sudhausen 12/27/2013 7:32:53 PM c:\pwworking\hmm\external\eron.sudhausen-arup.com\d0125341\FB-CT-2148-H.dgn

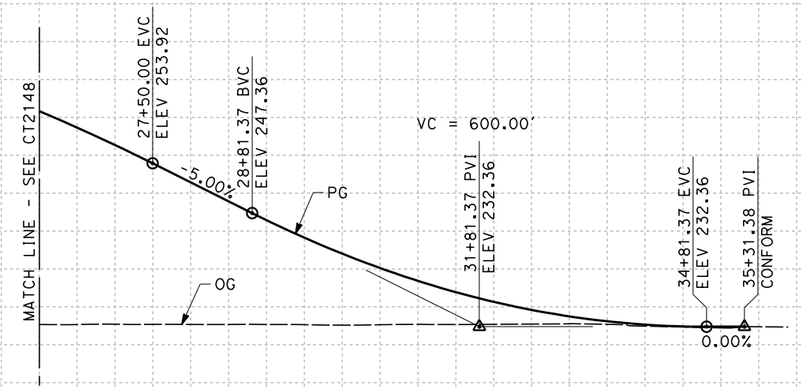


## PROFILE

"KIO" LINE
SCALE: HORIZ 1"=100'
VERT 1"=10'

| STATION | 6 | 7 | 8 | 9 | 30 | 1 | 2 | 3 | 4 | 35 | 6 | TOTAL |
|---|---|---|---|---|---|---|---|---|---|---|---|---|
| CY Exc | | | | | | | | | | | | |
| CY Emb | | | | | | | | | | | | |

| REV | DATE | BY | CHK | APP | DESCRIPTION |
|---|---|---|---|---|---|

DESIGNED BY A. CANNON
DRAWN BY E. SUDHAUSEN
CHECKED BY S. BROWN
IN CHARGE R. COFFIN
DATE 12/31/13

**RECORD SET 15% DESIGN SUBMISSION - NOT FOR CONSTRUCTION**

URS | HMM | ARUP
CALIFORNIA HIGH-SPEED TRAIN

CALIFORNIA HIGH-SPEED RAIL AUTHORITY

**CALIFORNIA HIGH-SPEED TRAIN PROJECT**
**FRESNO TO BAKERSFIELD**
HANFORD SUBSECTION
ALIGNMENT H
GRADE SEPARATION PROFILE
IONA AVE

CONTRACT NO. HSR 06-0003
DRAWING NO. CT2149
SCALE AS SHOWN
SHEET NO. 55 OF 60

04/02/2014 - RFP No.: HSR 13-57

eron.sudhausen 12/27/2013 7:34:59 PM c:\pwworking\hmm\external\eron.sudhausen-arup.com\d0125341\FB-CT-2149-H.dgn

## LINE DATA

| NO. | BEARING | DISTANCE |
|---|---|---|
| 1 | S89°24'15"E | 242.87' |
| 2 | S36°09'25"E | 1070.24' |
| 3 | S00°22'40"W | 240.40' |

## CURVE DATA

| NO. | R | Δ | T | L |
|---|---|---|---|---|
| (1) | 1100.00' | 53°14'50" | 551.41' | 1022.27' |
| (2) | 1100.00' | 36°32'05" | 363.09' | 701.41' |

E CLARKSON AVE

S MINNEWAWA AVE

ROADWAY ROW

CONFORM

R=58'

R=32'

HST ROW

"H" LINE

1175+00

1180+00

1185+00

1190+00

1195+00

1200+00

1205+00

REMOVE BASE AND SURFACING

EP

"FMI" 12+65.14 EC

"FMI" LINE

32'

ROADWAY ROW

"FMI" 23+35.38 BC

ACCESS ROAD

"FMI" 30+36.79 EC

"FMI" 32+77.19 PI CONFORM

"FMI" 2+42.87 BC

"FMI" 0+00.00 PI CONFORM

100 0 100 200

SCALE: 1"=100'

04/02/2014 - RFP No.: HSR 13-57

12/24/2013 10:56:43 AM c:\pwworking\hmm\external\alton.cannon-arup.com\d0125341\FB-CR-1251-H.dgn

alton.cannon

| REV | DATE | BY | CHK | APP | DESCRIPTION |
|---|---|---|---|---|---|
| | | | | | |

DESIGNED BY A. CANNON
DRAWN BY E. SUDHAUSEN
CHECKED BY S. BROWN
IN CHARGE R. COFFIN
DATE 12/31/13

**RECORD SET 15% DESIGN SUBMISSION - NOT FOR CONSTRUCTION**

URS | HMM | ARUP
California High-Speed Train

CALIFORNIA HIGH-SPEED RAIL AUTHORITY

# CALIFORNIA HIGH-SPEED TRAIN PROJECT
# FRESNO TO BAKERSFIELD

HANFORD SUBSECTION
ALIGNMENT H
ROADWAY LAYOUT
E CLARKSON AVE & S MINNEWAWA AVE

CONTRACT NO. HSR 06-0003
DRAWING NO. CR1251
SCALE AS SHOWN
SHEET NO. 56 OF 60

c:\pwworking\hmm\external\eron.sudhausen-arup.com\d0125341\FB-CR-2251-H.dgn
12/27/2013 4:09:06 PM
eron.sudhausen

04/02/2014 - RFP No.: HSR 13-57

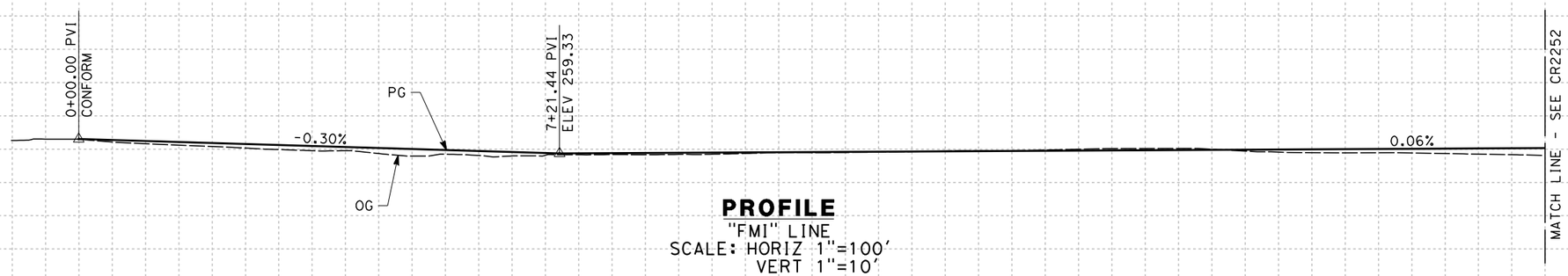


**PROFILE**
"FMI" LINE
SCALE: HORIZ 1"=100'
VERT 1"=10'

| STATION | 0 | 1 | 2 | 3 | 4 | 5 | 6 | 7 | 8 | 9 | 10 | 1 | 2 | 3 | 4 | 15 | 6 | 7 | 8 | 9 | 20 | 1 | 2 | TOTAL |
|---|---|---|---|---|---|---|---|---|---|---|---|---|---|---|---|---|---|---|---|---|---|---|---|---|
| CY Exc | | | | | | | | | | | | | | | | | | | | | | | | |
| CY Emb | | | | | | | | | | | | | | | | | | | | | | | | |

| REV | DATE | BY | CHK | APP | DESCRIPTION |
|---|---|---|---|---|---|

DESIGNED BY A. CANNON
DRAWN BY E. SUDHAUSEN
CHECKED BY S. BROWN
IN CHARGE R. COFFIN
DATE 12/31/13

**RECORD SET 15% DESIGN SUBMISSION - NOT FOR CONSTRUCTION**

URS | HMM | ARUP
CALIFORNIA HIGH-SPEED TRAIN

CALIFORNIA
HIGH-SPEED RAIL AUTHORITY

# CALIFORNIA HIGH-SPEED TRAIN PROJECT
# FRESNO TO BAKERSFIELD
HANFORD SUBSECTION
ALIGNMENT H
ROADWAY PROFILE
E CLARKSON AVE & S MINNEWAWA AVE

CONTRACT NO. HSR 06-0003
DRAWING NO. CR2251
SCALE AS SHOWN
SHEET NO. 57 OF 60

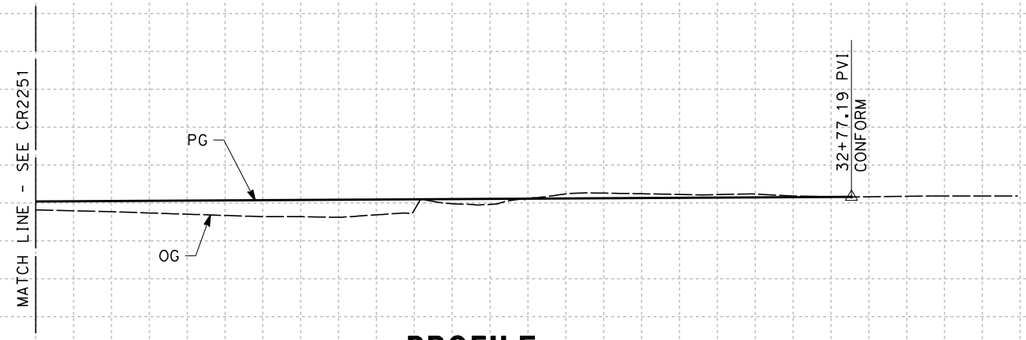


**PROFILE**
"FMI" LINE
SCALE: HORIZ 1"=100'
VERT 1"=10'

| STATION | | 2 | 3 | 4 | 25 | 6 | 7 | 8 | 9 | 30 | 1 | 2 | 3 | 4 | 35 | TOTAL |
|---|---|---|---|---|---|---|---|---|---|---|---|---|---|---|---|---|
| CY | Exc | | | | | | | | | | | | | | | |
| | Emb | | | | | | | | | | | | | | | |

| REV | DATE | BY | CHK | APP | DESCRIPTION |
|---|---|---|---|---|---|

DESIGNED BY A. CANNON
DRAWN BY E. SUDHAUSEN
CHECKED BY S. BROWN
IN CHARGE R. COFFIN
DATE 12/31/13

**RECORD SET 15% DESIGN SUBMISSION - NOT FOR CONSTRUCTION**

URS | HMM | ARUP
CALIFORNIA HIGH-SPEED TRAIN

CALIFORNIA HIGH-SPEED RAIL AUTHORITY

**CALIFORNIA HIGH-SPEED TRAIN PROJECT**
**FRESNO TO BAKERSFIELD**
HANFORD SUBSECTION
ALIGNMENT H
ROADWAY PROFILE
E CLARKSON AVE & S MINNEWAWA AVE

CONTRACT NO. HSR 06-0003
DRAWING NO. CR2252
SCALE AS SHOWN
SHEET NO. 58 OF 60

04/02/2014 - RFP No.: HSR 13-57

eron.sudhausen 12/27/2013 4:12:56 PM c:\pwworking\hmm\external\eron.sudhausen-arup.com\d0125341\FB-CR-2252-H.dgn

NOTES:

1. SUPERELEVATION AS SHOWN OR AS DIRECTED BY THE ENGINEER.
2. PAVEMENT SECTIONS ARE SHOWN FOR INFORMATIONAL PURPOSES ONLY. EXACT DIMENSION AND MATERIAL OF THE PAVEMENT SECTION TO BE CONFIRMED.

## STRUCTURAL SECTIONS
### TYPICAL ROADWAY

[1] 0.60' HMA (TYPE A)
1.50' CL2 AB

[2] 0.40' HMA (TYPE A)
1.20' CL2 AB

TABLE OF DESIGN SPEEDS

| STREET NAME | ALIGNMENT DESIGNATION | DESIGN SPEED | CRITERIA/JURISDICTION |
|---|---|---|---|
| E CLARKSON AVE | FMI | 55 | AASHTO/FRESNO COUNTY |
| S CLOVIS AVE | FCL | 65 | AASHTO/FRESNO COUNTY |
| E ELKHORN AVE | FEL | 65 | AASHTO/FRESNO COUNTY |
| S FOWLER AVE | FFO | 65 | AASHTO/FRESNO COUNTY |
| E DAVIS AVE | FDA | 65 | AASHTO/FRESNO COUNTY |
| DOVER AVE | KDO | 55 | HDM/KINGS COUNTY |
| 8TH AVE | K8N/K8S | 55 | HDM/KINGS COUNTY |
| EXCELSIOR AVE | KEX | 55 | HDM/KINGS COUNTY |
| ELDER AVE | KEL | 55 | HDM/KINGS COUNTY |
| FLINT AVE | KFL | 60 | HDM/KINGS COUNTY |
| FARGO AVE | KFA | 55 | HDM/KINGS COUNTY |
| 7 1/2 AVE | K7N | 55 | HDM/KINGS COUNTY |
| 7 1/2 AVE CONNECTOR | K7 | 25 | HDM/KINGS COUNTY |
| HANFORD ARMONA RD | KHA | 55 | HDM/KINGS COUNTY |
| HOUSTON AVE | KHO | 55 | HDM/KINGS COUNTY |
| IONA AVE | KIO | 55 | HDM/KINGS COUNTY |

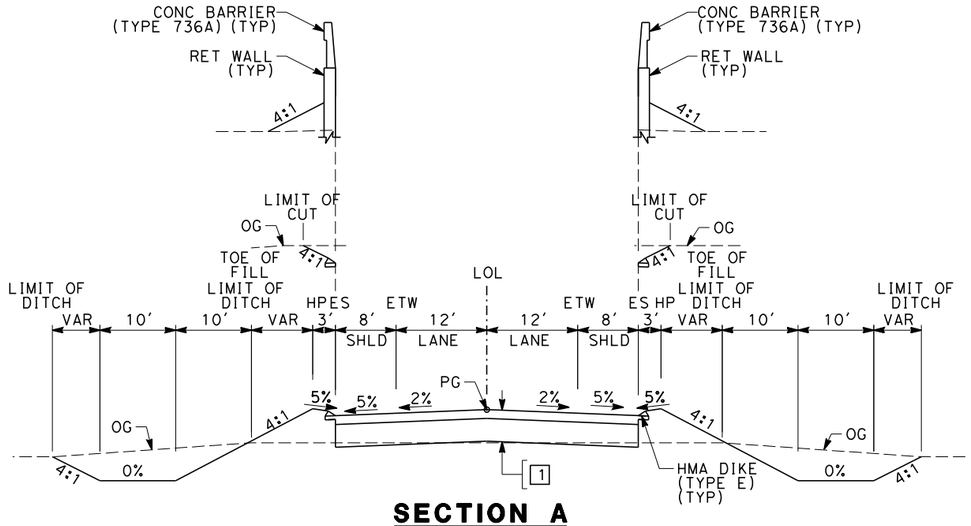


## SECTION A

"FEL" 4+00.00 TO 18+63.00
"FEL" 22+11.00 TO 37+00.00
"FFO" 20+60.00 TO 36+00.00
"FFO" 38+70.00 TO 54+00.00
"KEX" 15+00.00 TO 25+80.00
"KEX" 28+80.00 TO 43+00.00
"KEL" 12+00.00 TO 26+75.00
"KEL" 29+60.00 TO 44+50.00
"KFL" 8+00.00 TO 27+98.00
"KFL" 30+72.00 TO 49+00.00
"KHA" 4+50.00 TO 16+35.00
"KHA" 19+75.00 TO 27+50.00
"KHO" 3+50.00 TO 12+00.00
"KHO" 19+50.00 TO 31+00.00

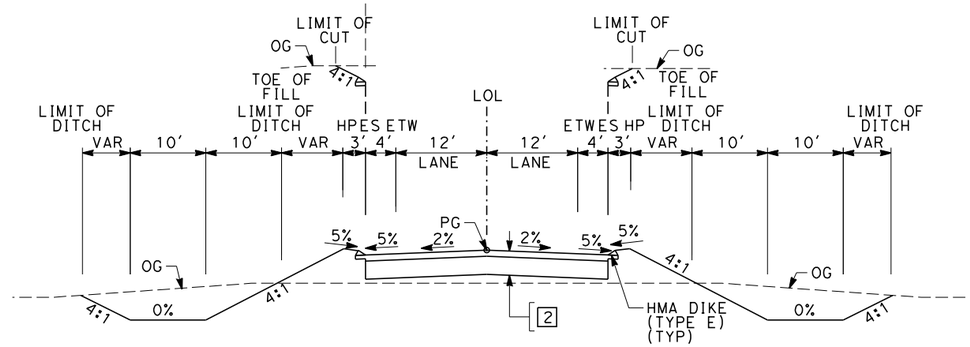


## SECTION B

"FCL" 11+00.00 TO 26+95.00
"FCL" 29+95.00 TO 45+00.00
"FDA" 8+00.00 TO 23+35.50
"FDA" 27+97.50 TO 42+80.00
"KDO" 12+00.00 TO 26+50.00
"KDO" 29+55.00 TO 44+00.00
"K8N" 22+00.00 TO 34+73.58
"K8S" 10+00.00 TO 23+00.00
"KFA" 11+00.00 TO 25+33.00
"KFA" 28+65.00 TO 43+00.00
"KIO" 3+00.00 TO 16+15.00
"KIO" 19+50.00 TO 33+00.00

04/02/2014 - RFP No.: HSR 13-57

$FILE$ $TIME$ $DATE$ $USER$

| REV | DATE | BY | CHK | APP | DESCRIPTION |
|---|---|---|---|---|---|

DESIGNED BY A. CANNON
DRAWN BY E. SUDHAUSEN
CHECKED BY J. MONG
IN CHARGE R. COFFIN
DATE 12/31/13

RECORD SET 15% DESIGN SUBMISSION - NOT FOR CONSTRUCTION

URS | HMM | ARUP
CALIFORNIA HIGH-SPEED TRAIN

CALIFORNIA HIGH-SPEED RAIL AUTHORITY

**CALIFORNIA HIGH-SPEED TRAIN PROJECT**
**FRESNO TO BAKERSFIELD**
HANFORD SUBSECTION
ALIGNMENT H
ROADWAY / GRADE SEPARATION
TYPICAL CROSS SECTIONS

CONTRACT NO. HSR 06-0003
DRAWING NO. CT3030
SCALE NO SCALE
SHEET NO. 59 OF 60

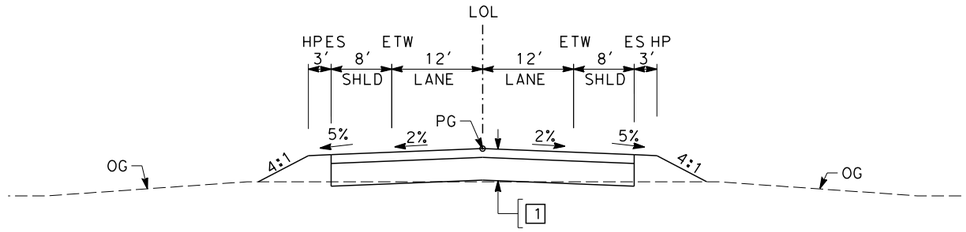


## SECTION C

| | | | |
|---|---|---|---|
| "FEL" | 1+00.00 TO 4+00.00 | "KEL" | 44+60.00 TO 46+00.00 |
| "FEL" | 37+00.00 TO 39+00.00 | "KFL" | 6+00.00 TO 8+00.00 |
| "FFO" | 8+00.00 TO 20+60.00 | "KFL" | 49+00.00 TO 52+00.00 |
| "FFO" | 54+00.00 TO 59+00.00 | "KHA" | 0+88.49 TO 4+50.00 |
| "KEX" | 9+00.00 TO 15+00.00 | "KHA" | 27+50.00 TO 35+64.59 |
| "KEX" | 43+00.00 TO 47+00.00 | "KHO" | 1+00.00 TO 3+50.00 |
| "KEL" | 10+00.00 TO 12+00.00 | "KHO" | 31+00.00 TO 35+00.00 |

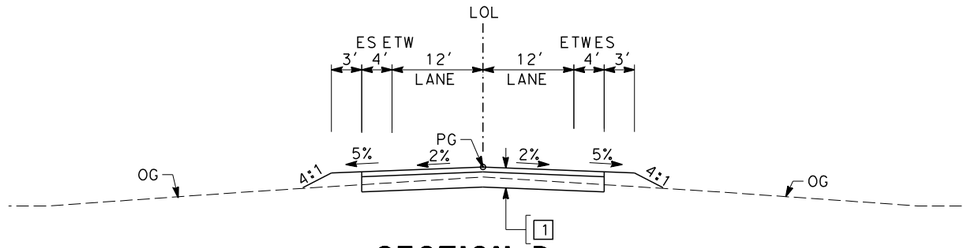


## SECTION D

| | | | |
|---|---|---|---|
| "K7" | 0+00.00 TO 13+44.31 | "K8N" | 12+50.00 TO 22+00.00 |
| "K7N" | 0+50.00 TO 12+05.95 | "K8S" | 23+00.00 TO 25+00.00 |
| "FMI" | 0+00.00 TO 32+77.19 | "KDO" | 10+00.00 TO 12+00.00 |
| "FCL" | 8+00.00 TO 11+00.00 | "KDO" | 44+00.00 TO 46+00.00 |
| "FCL" | 45+00.00 TO 52+00.00 | "KFA" | 9+00.00 TO 11+00.00 |
| "FDA" | 6+00.00 TO 8+00.00 | "KFA" | 43+00.00 TO 45+00.00 |
| "FDA" | 42+80.00 TO 45+00.00 | "KIO" | 0+29.73 TO 3+00.00 |
| | | "KIO" | 33+00.00 TO 35.31.38 |

04/02/2014 - RFP No.: HSR 13-57

| REV | DATE | BY | CHK | APP | DESCRIPTION |
|---|---|---|---|---|---|
| | | | | | |
| | | | | | |
| | | | | | |
| | | | | | |
| | | | | | |

DESIGNED BY A. CANNON
DRAWN BY E. SUDHAUSEN
CHECKED BY S. BROWN
IN CHARGE R. COFFIN
DATE 12/31/13

**RECORD SET 15% DESIGN SUBMISSION - NOT FOR CONSTRUCTION**

URS | HMM | ARUP
CALIFORNIA HIGH-SPEED TRAIN

CALIFORNIA
HIGH-SPEED RAIL AUTHORITY

**CALIFORNIA HIGH-SPEED TRAIN PROJECT**
**FRESNO TO BAKERSFIELD**
HANFORD SUBSECTION
ALIGNMENT H
ROADWAY / GRADE SEPARATION
TYPICAL CROSS SECTIONS

CONTRACT NO. HSR 06-0003
DRAWING NO. CT3031
SCALE NO SCALE
SHEET NO. 60 OF 60

CLI60413 12/31/2013 7:49:55 AM c:\pwworking\hmm\external\cli60413\d0125341\FB-CT-3031-H.dgn

## STREET CLOSURE

| STREET NAME | HST ALIGNMENT STA | LOCAL STANDARD |
|---|---|---|
| JERSEY AVE | 2227+50.00 | KINGS COUNTY |
| LANSING AVE | 2395+00.00 | KINGS COUNTY |

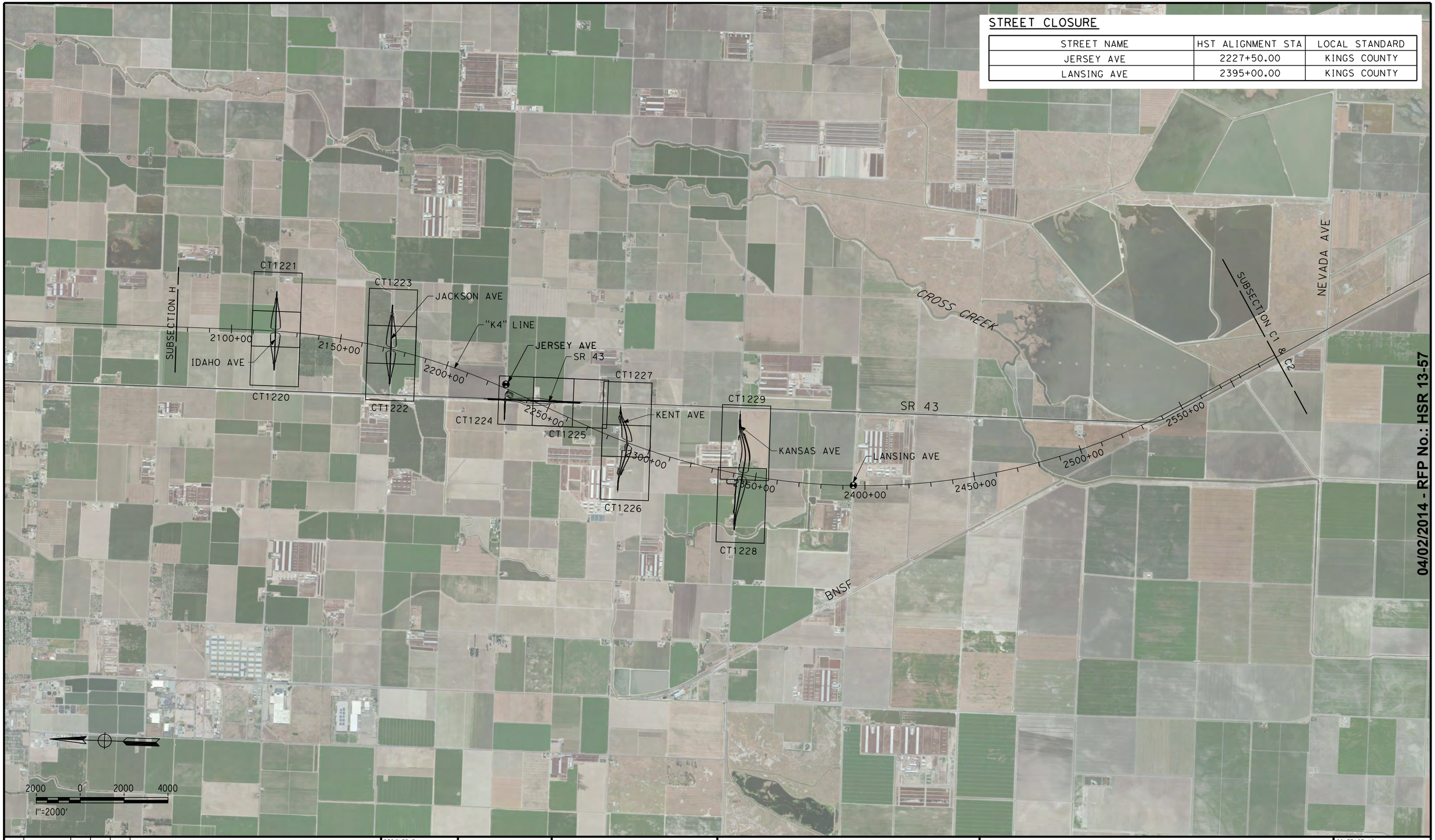


04/02/2014 - RFP No.: HSR 13-57

$FILE$
$TIME$
$DATE$
$USER$

| REV | DATE | BY | CHK | APP | DESCRIPTION |
|---|---|---|---|---|---|

DESIGNED BY A. CANNON
DRAWN BY E. SUDHAUSEN
CHECKED BY S. BROWN
IN CHARGE R. COFFIN
DATE 12/31/13

**RECORD SET 15% DESIGN SUBMISSION - NOT FOR CONSTRUCTION**

URS | HMM | ARUP
CALIFORNIA HIGH-SPEED TRAIN

CALIFORNIA
HIGH-SPEED RAIL AUTHORITY

# CALIFORNIA HIGH-SPEED TRAIN PROJECT
# FRESNO TO BAKERSFIELD

KAWEAH SUBSECTION
ALIGNMENT K4
ROADWAY / GRADE SEPARATION
KEY MAP

CONTRACT NO. HSR 06-0003
DRAWING NO. CB0065
SCALE AS SHOWN
SHEET NO. 1 OF 23

## LINE DATA

| NO. | BEARING | DISTANCE |
|---|---|---|
| 1 | S 89°43'34" E | 3600.00' |

IDAHO AVE

"KID" 10+00.00 PI CONFORM

ROADWAY ROW

LIMIT OF DITCH

LIMIT OF DITCH TOE OF FILL

DRAINAGE DITCH (TYP)

1

32'

"KID" LINE

BB

EP

MBGR (TYP)

EB

HST ROW

"K4" LINE

"K4" 2120+05.79 POC = "KID" 27+88.38 POT

ROADWAY ROW

LIMIT OF DITCH

LIMIT OF DITCH TOE OF FILL

SEE CT1221 MATCH LINE - SEE CT1221

2110+00

2115+00

2120+00

2125+00

ROADWAY ROW

LIMIT OF DITCH TOE OF FILL

LIMIT OF DITCH

CULVERT

EXIST CANAL

LIMIT OF DITCH TOE OF FILL

LIMIT OF DITCH

ROADWAY ROW

CANAL REALIGNMENT

100 0 100 200

SCALE: 1"=100'

04/02/2014 - RFP No.: HSR 13-57

$FILE$ $TIME$ $DATE$ $USER$

| REV | DATE | BY | CHK | APP | DESCRIPTION |
|---|---|---|---|---|---|

DESIGNED BY A. CANNON
DRAWN BY E. SUDHAUSEN
CHECKED BY S. BROWN
IN CHARGE R. COFFIN
DATE 12/31/13

**RECORD SET 15% DESIGN SUBMISSION - NOT FOR CONSTRUCTION**

URS | HMM | ARUP
CALIFORNIA HIGH-SPEED TRAIN

CALIFORNIA HIGH-SPEED RAIL AUTHORITY

# CALIFORNIA HIGH-SPEED TRAIN PROJECT
# FRESNO TO BAKERSFIELD
KAWEAH SUBSECTION
ALIGNMENT K4
GRADE SEPARATION LAYOUT
IDAHO AVE

CONTRACT NO. HSR 06-0003
DRAWING NO. CT1220
SCALE AS SHOWN
SHEET NO. 2 OF 23

## LINE DATA

| NO. | BEARING | DISTANCE |
|---|---|---|
| 1 | S 89°43'34" E | 3600.00' |

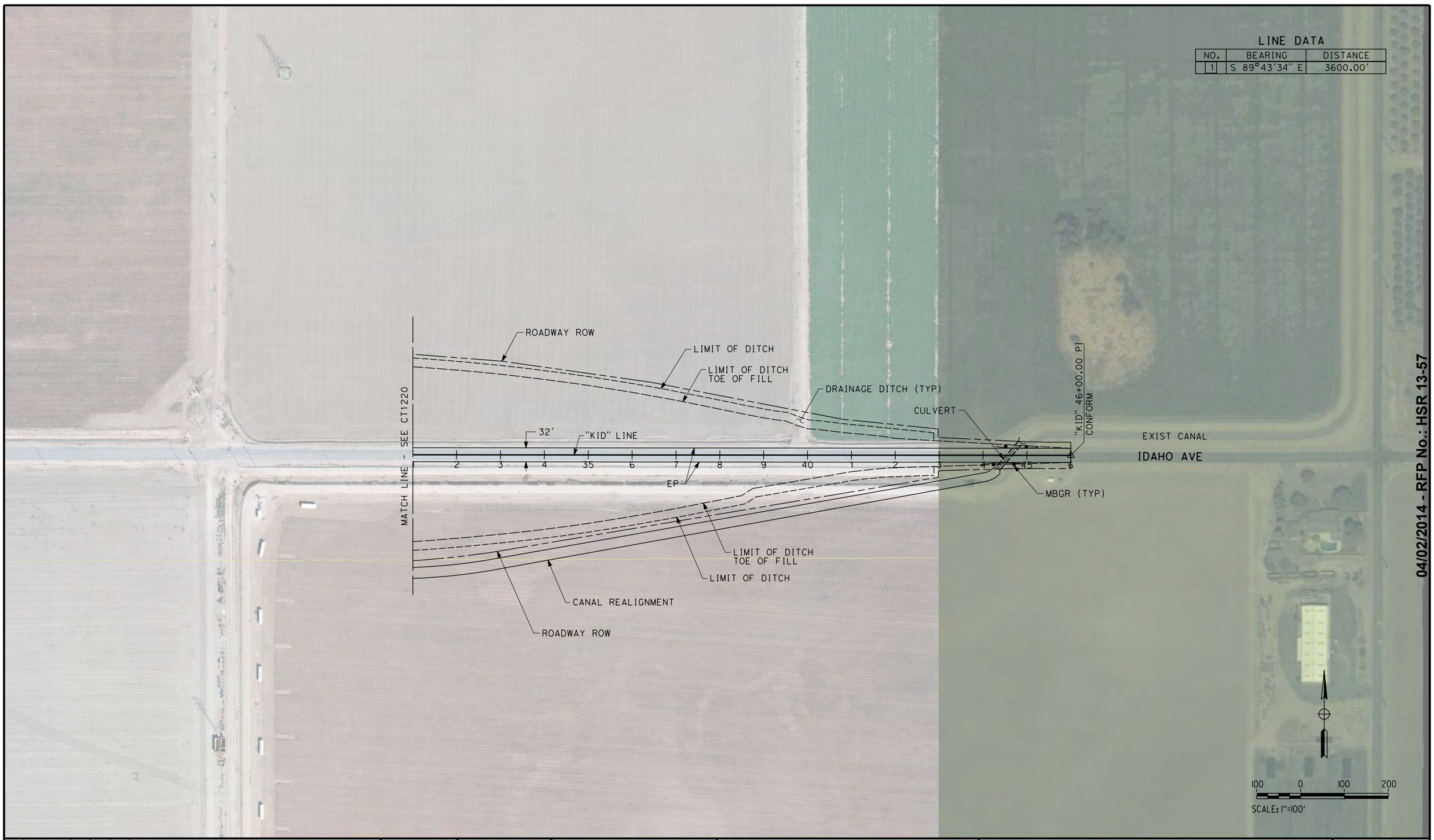


04/02/2014 - RFP No.: HSR 13-57

$USER$ $TIME$ $FILE$ $DATE$

| REV | DATE | BY | CHK | APP | DESCRIPTION |
|---|---|---|---|---|---|

DESIGNED BY A. CANNON
DRAWN BY E. SUDHAUSEN
CHECKED BY S. BROWN
IN CHARGE R. COFFIN
DATE 12/31/13

**RECORD SET 15% DESIGN SUBMISSION - NOT FOR CONSTRUCTION**

URS | HMM | ARUP
CALIFORNIA HIGH-SPEED TRAIN

CALIFORNIA
HIGH-SPEED RAIL AUTHORITY

# CALIFORNIA HIGH-SPEED TRAIN PROJECT
# FRESNO TO BAKERSFIELD
KAWEAH SUBSECTION
ALIGNMENT K4
GRADE SEPARATION LAYOUT
IDAHO AVE

CONTRACT NO. HSR 06-0003
DRAWING NO. CT1221
SCALE AS SHOWN
SHEET NO. 3 OF 23

## LINE DATA

| NO. | BEARING | DISTANCE |
|---|---|---|
| 1 | S 89°41'46" E | 3700.00' |

"KJA" 10+00.00 PI

"KJA" 11+00.00 CONFORM

DRAINAGE DITCH (TYP)

ROADWAY ROW

LIMIT OF DITCH

LIMIT OF DITCH TOE OF FILL

JACKSON AVE

"K4" 2173+32.90 POC= "KJA" 26+92.71 POT

"KJA" LINE

40'

BB

EP

EB

MBGR (TYP)

"K4" LINE

HST ROW

TRACTION POWER FACILITIES (NORTH OPTION)

ACCESS ROAD

UTILITY SWITCHING STATION (NORTH OPTION)

LIMIT OF DITCH

LIMIT OF DITCH TOE OF FILL

2165+00

2170+00

2175+00

2180+00

MATCH LINE - SEE CT1223

LIMIT OF DITCH

LIMIT OF DITCH TOE OF FILL

ROADWAY ROW

ACCESS ROAD

LIMIT OF DITCH

HST ROW

LIMIT OF DITCH TOE OF FILL

UTILITY SWITCHING STATION (SOUTH OPTION)

CANAL REALIGNMENT

TRACTION POWER FACILITIES (SOUTH OPTION)

100 0 100 200

SCALE: 1"=100'

04/02/2014 - RFP No.: HSR 13-57

$FILE$ $TIME$ $DATE$ $USER$

| REV | DATE | BY | CHK | APP | DESCRIPTION |
|---|---|---|---|---|---|

DESIGNED BY A. CANNON
DRAWN BY E. SUDHAUSEN
CHECKED BY S. BROWN
IN CHARGE R. COFFIN
DATE 12/31/13

**RECORD SET 15% DESIGN SUBMISSION - NOT FOR CONSTRUCTION**

URS | HMM | ARUP
California High-Speed Train

CALIFORNIA HIGH-SPEED RAIL AUTHORITY

# CALIFORNIA HIGH-SPEED TRAIN PROJECT
# FRESNO TO BAKERSFIELD

KAWEAH SUBSECTION
ALIGNMENT K4
GRADE SEPARATION LAYOUT
JACKSON AVE

CONTRACT NO. HSR 06-0003
DRAWING NO. CT1222
SCALE AS SHOWN
SHEET NO. 4 OF 23

## LINE DATA

| NO. | BEARING | DISTANCE |
|---|---|---|
| 1 | S 89°41'46" E | 3700.00' |

04/02/2014 - RFP No.: HSR 13-57

$FILE$ $TIME$ $DATE$ $USER$

| REV | DATE | BY | CHK | APP | DESCRIPTION |
|---|---|---|---|---|---|
| | | | | | |

DESIGNED BY A. CANNON
DRAWN BY E. SUDHAUSEN
CHECKED BY S. BROWN
IN CHARGE R. COFFIN
DATE 12/31/13

**RECORD SET 15% DESIGN SUBMISSION - NOT FOR CONSTRUCTION**

URS | HMM | ARUP
California High-Speed Train

CALIFORNIA HIGH-SPEED RAIL AUTHORITY

# CALIFORNIA HIGH-SPEED TRAIN PROJECT
# FRESNO TO BAKERSFIELD
KAWEAH SUBSECTION
ALIGNMENT K4
GRADE SEPARATION LAYOUT
JACKSON AVE

CONTRACT NO. HSR 06-0003
DRAWING NO. CT1223
SCALE AS SHOWN
SHEET NO. 5 OF 23

## LINE DATA

| NO. | BEARING | DISTANCE |
|---|---|---|
| 1 | S 00°27'06" W | 4500.00' |
| 2 | N 89°42'41" W | 1000.00' |

2220+00
2225+00
2230+00
2235+00
2240+00
2245+00
2250+00
CONFORM
R=50'
R=50'
ROADWAY ROW
CULVERT
"K4" LINE
CANAL REALIGNMENT
HST ROW
PIPE REALIGNMENT
RETENTION BASIN
"SR43J" 0+00.00 PI
"SR43J" 2+00.00 CONFORM
"SR43J" LINE
ROADWAY ROW
R=60'
TOP OF CUT
EP
SR 43
BB
"K4" 2242+13.82 POC= "SR43J" 22+35.60 POT
MBGR (TYP)
1
89'
44'
EB
MATCH LINE - SEE CT1225
"SR43J" 09+87.73 POT= "KJE" 10+00.00 POT
R=60'
PIPE REALIGNMENT
ROADWAY ROW
TOE OF CUT
ROADWAY ROW
TOP OF CUT
ROADWAY ROW
2
JERSEY AVE
"KJE" 1+00.00 CONFORM
"KJE" 0+00.00 PI
100 0 100 200
SCALE: 1"=100'

04/02/2014 - RFP No.: HSR 13-57

$FILE$
$TIME$
$DATE$
$USER$

| REV | DATE | BY | CHK | APP | DESCRIPTION |
|---|---|---|---|---|---|

DESIGNED BY A. CANNON
DRAWN BY E. SUDHAUSEN
CHECKED BY S. BROWN
IN CHARGE R. COFFIN
DATE 12/31/13

**RECORD SET 15% DESIGN SUBMISSION - NOT FOR CONSTRUCTION**

URS | HMM | ARUP
California High-Speed Train

CALIFORNIA HIGH-SPEED RAIL AUTHORITY

# CALIFORNIA HIGH-SPEED TRAIN PROJECT
# FRESNO TO BAKERSFIELD
KAWEAH SUBSECTION
ALIGNMENT K4
GRADE SEPARATION LAYOUT
STATE ROUTE 43 (JERSEY AVE)

CONTRACT NO. HSR 06-0003
DRAWING NO. CT1224
SCALE AS SHOWN
SHEET NO. 6 OF 23

LINE DATA

| NO. | BEARING | DISTANCE |
|---|---|---|
| 1 | S 00°27'06" W | 4500.00' |

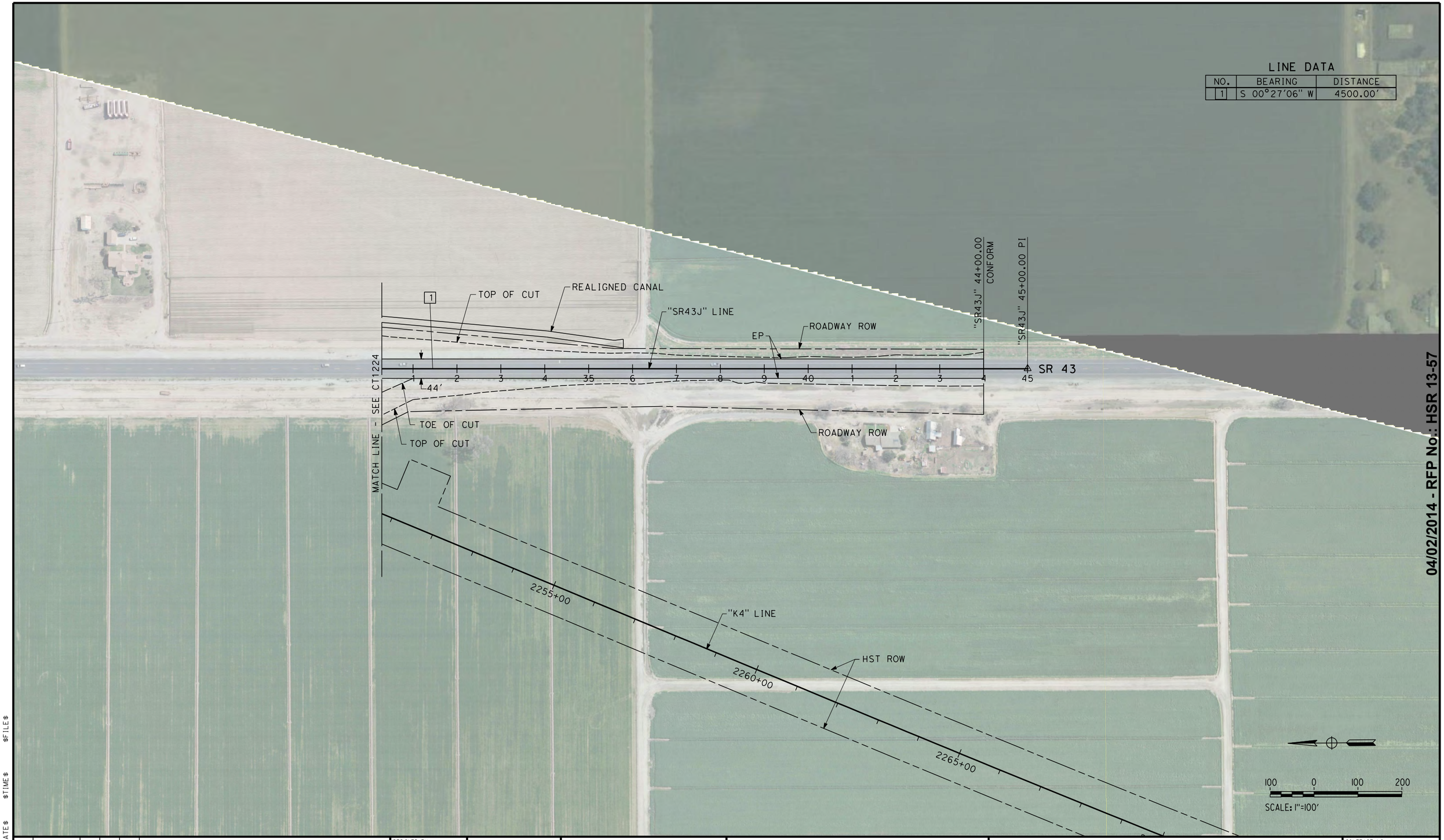


04/02/2014 - RFP No.: HSR 13-57

| REV | DATE | BY | CHK | APP | DESCRIPTION |
|---|---|---|---|---|---|
| | | | | | |

DESIGNED BY A. CANNON
DRAWN BY E. SUDHAUSEN
CHECKED BY S. BROWN
IN CHARGE R. COFFIN
DATE 12/31/13

**RECORD SET 15% DESIGN SUBMISSION - NOT FOR CONSTRUCTION**

URS | HMM | ARUP
CALIFORNIA HIGH-SPEED TRAIN

CALIFORNIA
HIGH-SPEED RAIL AUTHORITY

# CALIFORNIA HIGH-SPEED TRAIN PROJECT
# FRESNO TO BAKERSFIELD

KAWEAH SUBSECTION
ALIGNMENT K4
GRADE SEPARATION LAYOUT
STATE ROUTE 43 (JERSEY AVE)

CONTRACT NO. HSR 06-0003
DRAWING NO. CT1225
SCALE AS SHOWN
SHEET NO. 7 OF 23

$USER$ $DATE$ $TIME$ $FILE$

## LINE DATA

| NO. | BEARING | DISTANCE |
|---|---|---|
| 1 | S 89°46'22" E | 358.19' |
| 2 | S 73°26'35" E | 583.18' |

## CURVE DATA

| NO. | R | Δ | T | L |
|---|---|---|---|---|
| ① | 2000.00' | 16°19'46" | 286.95' | 570.01' |
| ② | 2500.00' | 40°19'05" | 917.79' | 1759.21' |

## RETAINING WALL DATA

| NO. | LOCATION BEGIN | LOCATION END | LENGTH | MAX HEIGHT |
|---|---|---|---|---|
| 1 | 194.62' LT 29+29.03 | 79.71' LT 32+54.73 | 433' | 30' |

04/02/2014 - RFP No.: HSR 13-57

| REV | DATE | BY | CHK | APP | DESCRIPTION |
|---|---|---|---|---|---|

DESIGNED BY A. CANNON
DRAWN BY E. SUDHAUSEN
CHECKED BY S. BROWN
IN CHARGE R. COFFIN
DATE 12/31/13

**RECORD SET 15% DESIGN SUBMISSION - NOT FOR CONSTRUCTION**

URS | HMM | ARUP
CALIFORNIA HIGH-SPEED TRAIN

CALIFORNIA HIGH-SPEED RAIL AUTHORITY

# CALIFORNIA HIGH-SPEED TRAIN PROJECT
# FRESNO TO BAKERSFIELD
KAWEAH SUBSECTION
ALIGNMENT K4
GRADE SEPARATION LAYOUT
KENT AVE

CONTRACT NO. HSR 06-0003
DRAWING NO. CT1226
SCALE AS SHOWN
SHEET NO. 8 OF 23

$FILE$ $TIME$ $DATE$ $USER$

## LINE DATA

| NO. | BEARING | DISTANCE |
|---|---|---|
| 3 | S 89°46'22" E | 201.39' |

## CURVE DATA

| NO. | R | Δ | T | L |
|---|---|---|---|---|
| ② | 2500.00' | 40°19'05" | 917.79' | 1759.21' |
| ③ | 1500.00' | 23°59'19" | 318.68' | 628.02' |

| REV | DATE | BY | CHK | APP | DESCRIPTION |
|---|---|---|---|---|---|
| | | | | | |

DESIGNED BY A. CANNON
DRAWN BY E. SUDHAUSEN
CHECKED BY S. BROWN
IN CHARGE R. COFFIN
DATE 12/31/13

**RECORD SET 15% DESIGN SUBMISSION - NOT FOR CONSTRUCTION**

URS | HMM | ARUP
CALIFORNIA HIGH-SPEED TRAIN

CALIFORNIA
HIGH-SPEED RAIL AUTHORITY

# CALIFORNIA HIGH-SPEED TRAIN PROJECT
# FRESNO TO BAKERSFIELD
KAWEAH SUBSECTION
ALIGNMENT K4
GRADE SEPARATION LAYOUT
KENT AVE

CONTRACT NO. HSR 06-0003
DRAWING NO. CT1227
SCALE AS SHOWN
SHEET NO. 9 OF 23

04/02/2014 - RFP No.: HSR 13-57

$USER$ $TIME$ $FILE$ $DATE$

## LINE DATA

| NO. | BEARING | DISTANCE |
|---|---|---|
| 1 | S 88°48'29" E | 208.54' |
| 2 | S 81°45'53" E | 2295.80' |

## CURVE DATA

| NO. | R | Δ | T | L |
|---|---|---|---|---|
| (1) | 5000.00' | 07°02'35" | 307.70' | 614.63' |

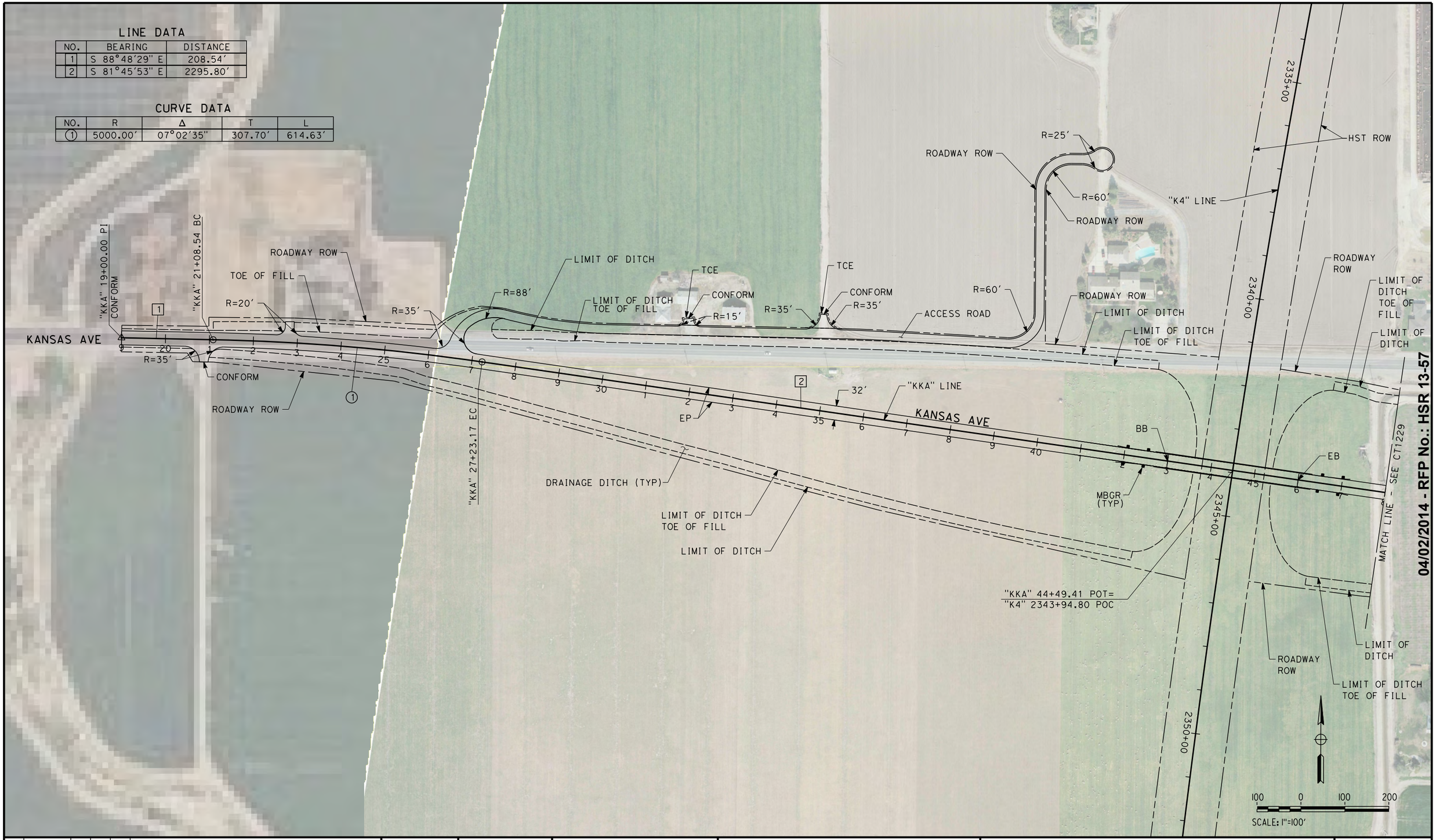


04/02/2014 - RFP No.: HSR 13-57

| REV | DATE | BY | CHK | APP | DESCRIPTION |
|---|---|---|---|---|---|

DESIGNED BY A. CANNON
DRAWN BY E. SUDHAUSEN
CHECKED BY S. BROWN
IN CHARGE R. COFFIN
DATE 12/31/13

**RECORD SET 15% DESIGN SUBMISSION - NOT FOR CONSTRUCTION**

URS | HMM | ARUP
CALIFORNIA HIGH-SPEED TRAIN

CALIFORNIA HIGH-SPEED RAIL AUTHORITY

# CALIFORNIA HIGH-SPEED TRAIN PROJECT
# FRESNO TO BAKERSFIELD

KAWEAH SUBSECTION
ALIGNMENT K4
GRADE SEPARATION LAYOUT
KANSAS AVE

CONTRACT NO. HSR 06-0003
DRAWING NO. CT1228
SCALE AS SHOWN
SHEET NO. 10 OF 23

$FILE$ $TIME$ $DATE$ $USER$

## LINE DATA

| NO. | BEARING | DISTANCE |
|---|---|---|
| 2 | S 81°45'53" E | 2295.80' |
| 3 | S 74°11'51" E | 538.98' |
| 4 | S 88°42'51" E | 406.47' |

## CURVE DATA

| NO. | R | Δ | T | L |
|---|---|---|---|---|
| ② | 2000.00' | 24°02'16" | 425.80' | 839.07' |
| ③ | 2000.00' | 17°05'18" | 300.48' | 596.50' |

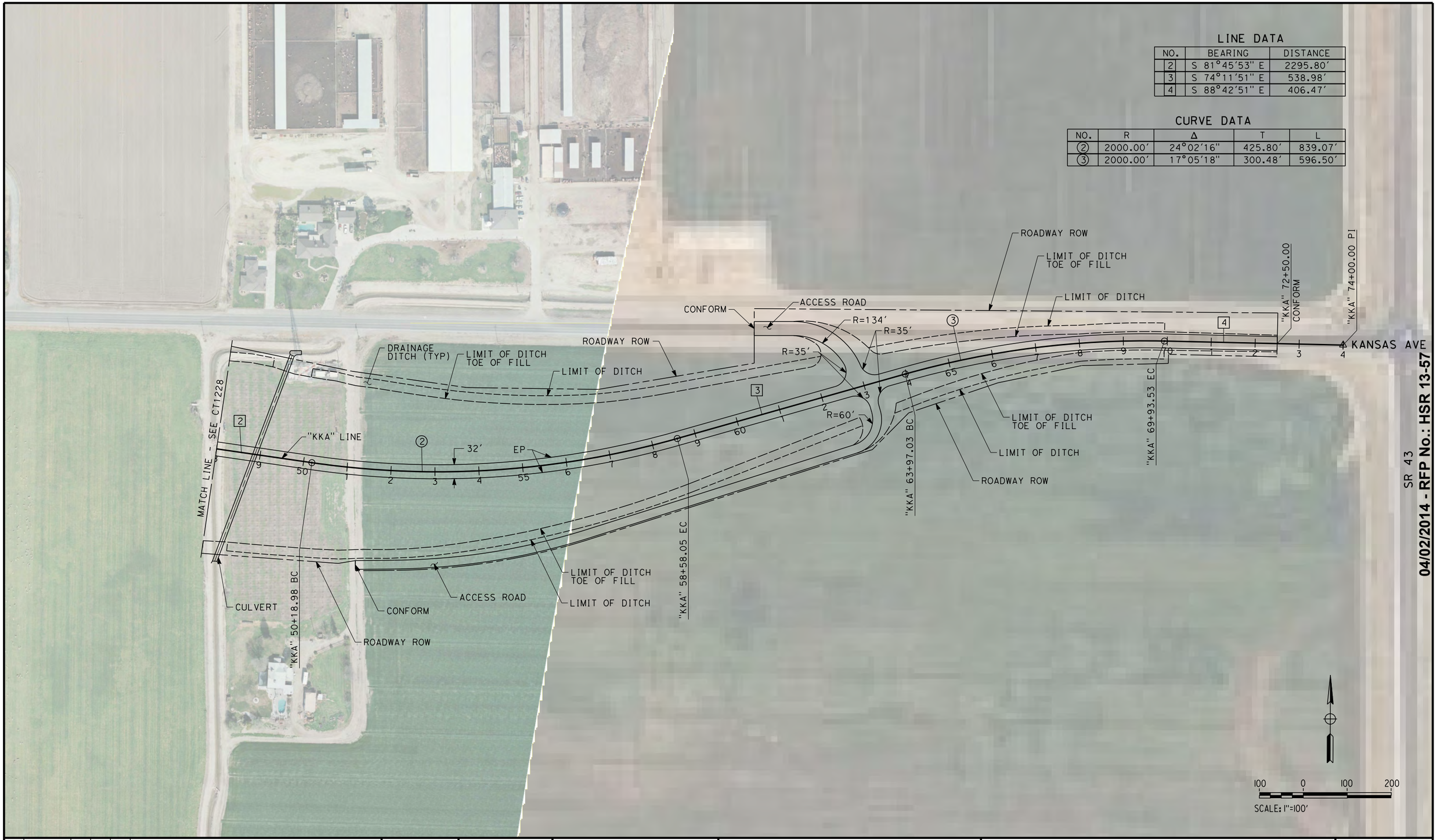


SR 43
04/02/2014 - RFP No.: HSR 13-57

$FILE$ $TIME$ $DATE$ $USER$

| REV | DATE | BY | CHK | APP | DESCRIPTION |
|---|---|---|---|---|---|
| | | | | | |

DESIGNED BY A. CANNON
DRAWN BY E. SUDHAUSEN
CHECKED BY S. BROWN
IN CHARGE R. COFFIN
DATE 12/31/13

**RECORD SET 15% DESIGN SUBMISSION - NOT FOR CONSTRUCTION**

URS | HMM | ARUP
California High-Speed Train

CALIFORNIA HIGH-SPEED RAIL AUTHORITY

# CALIFORNIA HIGH-SPEED TRAIN PROJECT
# FRESNO TO BAKERSFIELD
KAWEAH SUBSECTION
ALIGNMENT K4
GRADE SEPARATION LAYOUT
KANSAS AVE

CONTRACT NO. HSR 06-0003
DRAWING NO. CT1229
SCALE AS SHOWN
SHEET NO. 11 OF 23

NOTES:
1. MINIMUM VERTICAL CLEARANCE FOR HST IS 27' FROM TOP OF RAIL

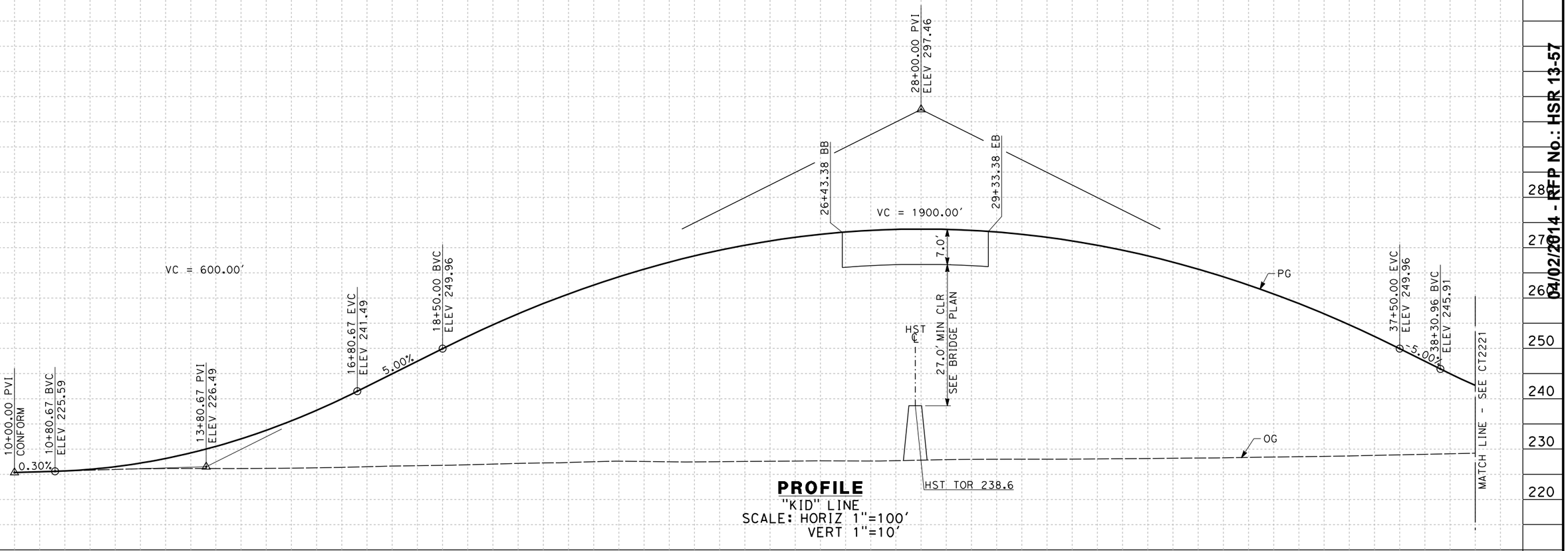


**PROFILE**
"KID" LINE
SCALE: HORIZ 1"=100'
VERT 1"=10'

| STATION | 10 | 1 | 2 | 3 | 4 | 15 | 6 | 7 | 8 | 9 | 20 | 1 | 2 | 3 | 4 | 25 | 6 | 7 | 8 | 9 | 30 | 1 | 2 | 3 | 4 | 35 | 6 | 7 | 8 | 9 | TOTAL |
|---|---|---|---|---|---|---|---|---|---|---|---|---|---|---|---|---|---|---|---|---|---|---|---|---|---|---|---|---|---|---|---|
| CY Exc | | | | | | | | | | | | | | | | | | | | | | | | | | | | | | | |
| CY Emb | | | | | | | | | | | | | | | | | | | | | | | | | | | | | | | |

| REV | DATE | BY | CHK | APP | DESCRIPTION |
|---|---|---|---|---|---|

DESIGNED BY A. CANNON
DRAWN BY E. SUDHAUSEN
CHECKED BY S. BROWN
IN CHARGE R. COFFIN
DATE 12/31/13

**RECORD SET 15% DESIGN SUBMISSION - NOT FOR CONSTRUCTION**

URS | HMM | ARUP
CALIFORNIA HIGH-SPEED TRAIN

CALIFORNIA
HIGH-SPEED RAIL AUTHORITY

**CALIFORNIA HIGH-SPEED TRAIN PROJECT**
**FRESNO TO BAKERSFIELD**
KAWEAH SUBSECTION
ALIGNMENT K4
GRADE SEPARATION PROFILE
IDAHO AVE

CONTRACT NO. HSR 06-0003
DRAWING NO. CT2220
SCALE AS SHOWN
SHEET NO. 12 OF 23

04/02/2014 - RFP No.: HSR 13-57

$FILE$ $TIME$ $DATE$ $USER$

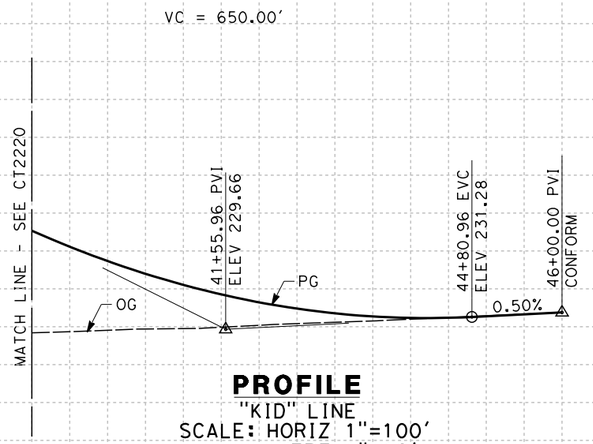


**PROFILE**
"KID" LINE
SCALE: HORIZ 1"=100'
VERT 1"=10'

| STATION | 9 | 40 | 1 | 2 | 3 | 4 | 45 | 6 | TOTAL |
|---|---|---|---|---|---|---|---|---|---|
| CY Exc | | | | | | | | | |
| CY Emb | | | | | | | | | |

| REV | DATE | BY | CHK | APP | DESCRIPTION |
|---|---|---|---|---|---|

DESIGNED BY A. CANNON
DRAWN BY E. SUDHAUSEN
CHECKED BY S. BROWN
IN CHARGE R. COFFIN
DATE 12/31/13

**RECORD SET 15% DESIGN SUBMISSION - NOT FOR CONSTRUCTION**

URS | HMM | ARUP
CALIFORNIA HIGH-SPEED TRAIN

CALIFORNIA HIGH-SPEED RAIL AUTHORITY

**CALIFORNIA HIGH-SPEED TRAIN PROJECT**
**FRESNO TO BAKERSFIELD**
KAWEAH SUBSECTION
ALIGNMENT K4
GRADE SEPARATION PROFILE
IDAHO AVE

CONTRACT NO. HSR 06-0003
DRAWING NO. CT2221
SCALE AS SHOWN
SHEET NO. 13 OF 23

04/02/2014 - RFP NO: HSR13-57

$FILE$ $TIME$ $DATE$ $USER$

NOTES:
1. MINIMUM VERTICAL CLEARANCE FOR HST IS 27' FROM TOP OF RAIL

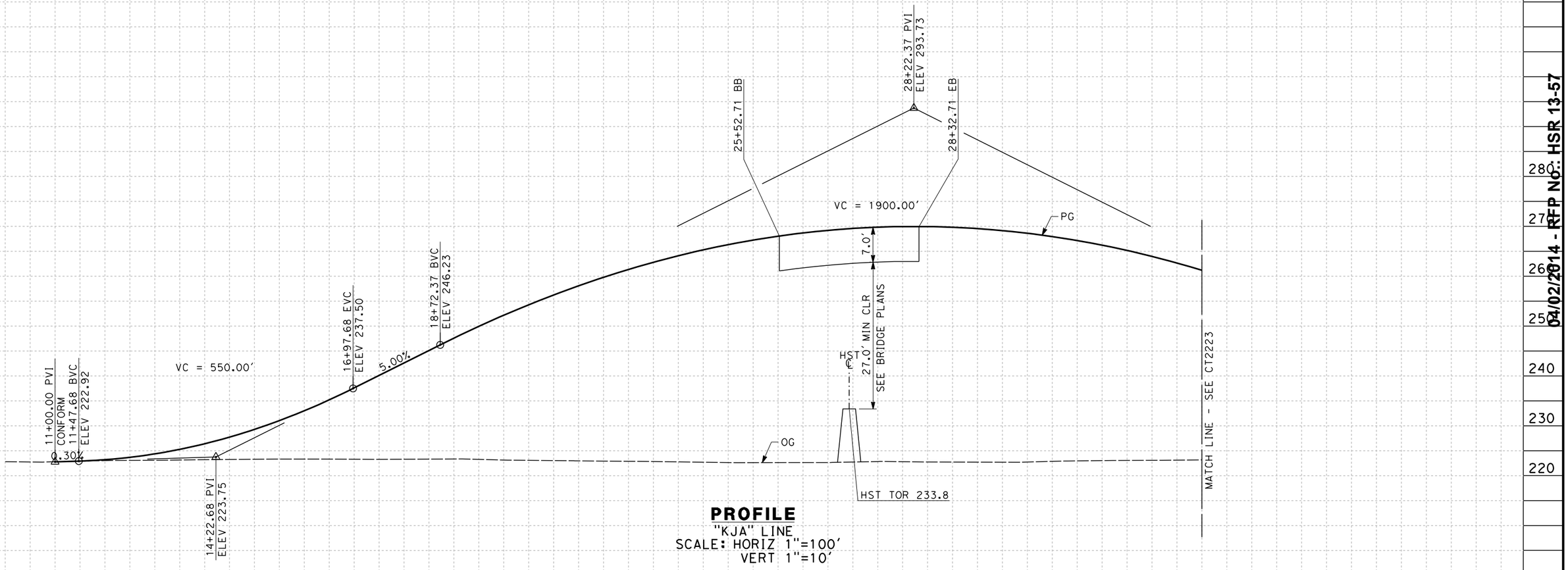


**PROFILE**
"KJA" LINE
SCALE: HORIZ 1"=100'
VERT 1"=10'

| STATION | 10 | 1 | 2 | 3 | 4 | 15 | 6 | 7 | 8 | 9 | 20 | 1 | 2 | 3 | 4 | 25 | 6 | 7 | 8 | 9 | 30 | 1 | 2 | 3 | 4 | TOTAL |
|---|---|---|---|---|---|---|---|---|---|---|---|---|---|---|---|---|---|---|---|---|---|---|---|---|---|---|
| CY Exc | | | | | | | | | | | | | | | | | | | | | | | | | | |
| CY Emb | | | | | | | | | | | | | | | | | | | | | | | | | | |

| REV | DATE | BY | CHK | APP | DESCRIPTION |
|---|---|---|---|---|---|

DESIGNED BY A. CANNON
DRAWN BY E. SUDHAUSEN
CHECKED BY S. BROWN
IN CHARGE R. COFFIN
DATE 12/31/13

**RECORD SET 15% DESIGN SUBMISSION - NOT FOR CONSTRUCTION**

URS | HMM | ARUP
CALIFORNIA HIGH-SPEED TRAIN

CALIFORNIA
HIGH-SPEED RAIL AUTHORITY

**CALIFORNIA HIGH-SPEED TRAIN PROJECT**
**FRESNO TO BAKERSFIELD**
KAWEAH SUBSECTION
ALIGNMENT K4
GRADE SEPARATION PROFILE
JACKSON AVE

CONTRACT NO. HSR 06-0003
DRAWING NO. CT2222
SCALE AS SHOWN
SHEET NO. 14 OF 23

$FILE$ $TIME$ $DATE$ $USER$

04/02/2014 - RFP No. HSR 13-57

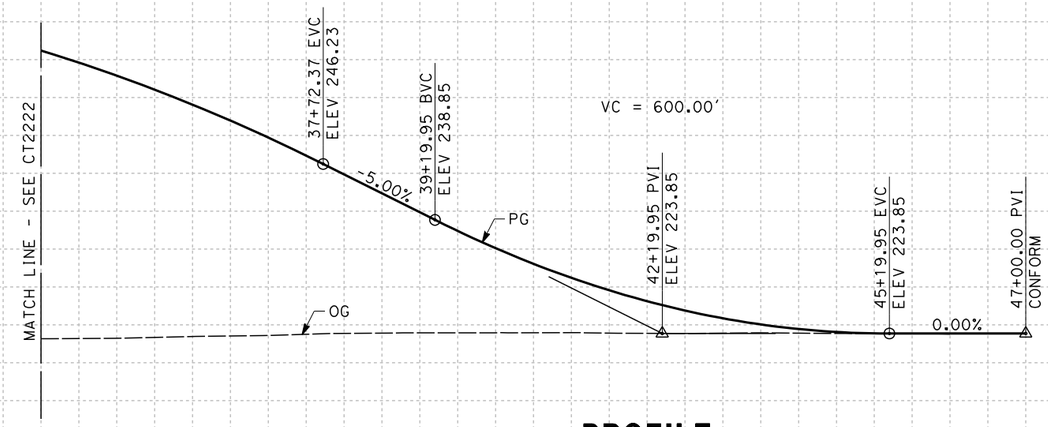


**PROFILE**
"KJA" LINE
SCALE: HORIZ 1"=100'
VERT 1"=10'

| STATION | 4 | 35 | 6 | 7 | 8 | 9 | 40 | 1 | 2 | 3 | 4 | 45 | 6 | 7 | TOTAL |
|---|---|---|---|---|---|---|---|---|---|---|---|---|---|---|---|
| CY Exc | | | | | | | | | | | | | | | |
| CY Emb | | | | | | | | | | | | | | | |

| REV | DATE | BY | CHK | APP | DESCRIPTION |
|---|---|---|---|---|---|

DESIGNED BY A. CANNON
DRAWN BY E. SUDHAUSEN
CHECKED BY S. BROWN
IN CHARGE R. COFFIN
DATE 12/31/13

**RECORD SET 15% DESIGN SUBMISSION - NOT FOR CONSTRUCTION**

URS | HMM | ARUP
CALIFORNIA HIGH-SPEED TRAIN

CALIFORNIA HIGH-SPEED RAIL AUTHORITY

# CALIFORNIA HIGH-SPEED TRAIN PROJECT
# FRESNO TO BAKERSFIELD
KAWEAH SUBSECTION
ALIGNMENT K4
GRADE SEPARATION PROFILE
JACKSON AVE

CONTRACT NO. HSR 06-0003
DRAWING NO. CT2223
SCALE AS SHOWN
SHEET NO. 15 OF 23

RFP NO: HSR 13-57
04/02/2014 - RFP NO

$FILE$ $TIME$ $DATE$ $USER$

NOTES:
1. MINIMUM VERTICAL CLEARANCE BELOW HST STRUCTURE IS 16.5' FROM ROADWAY

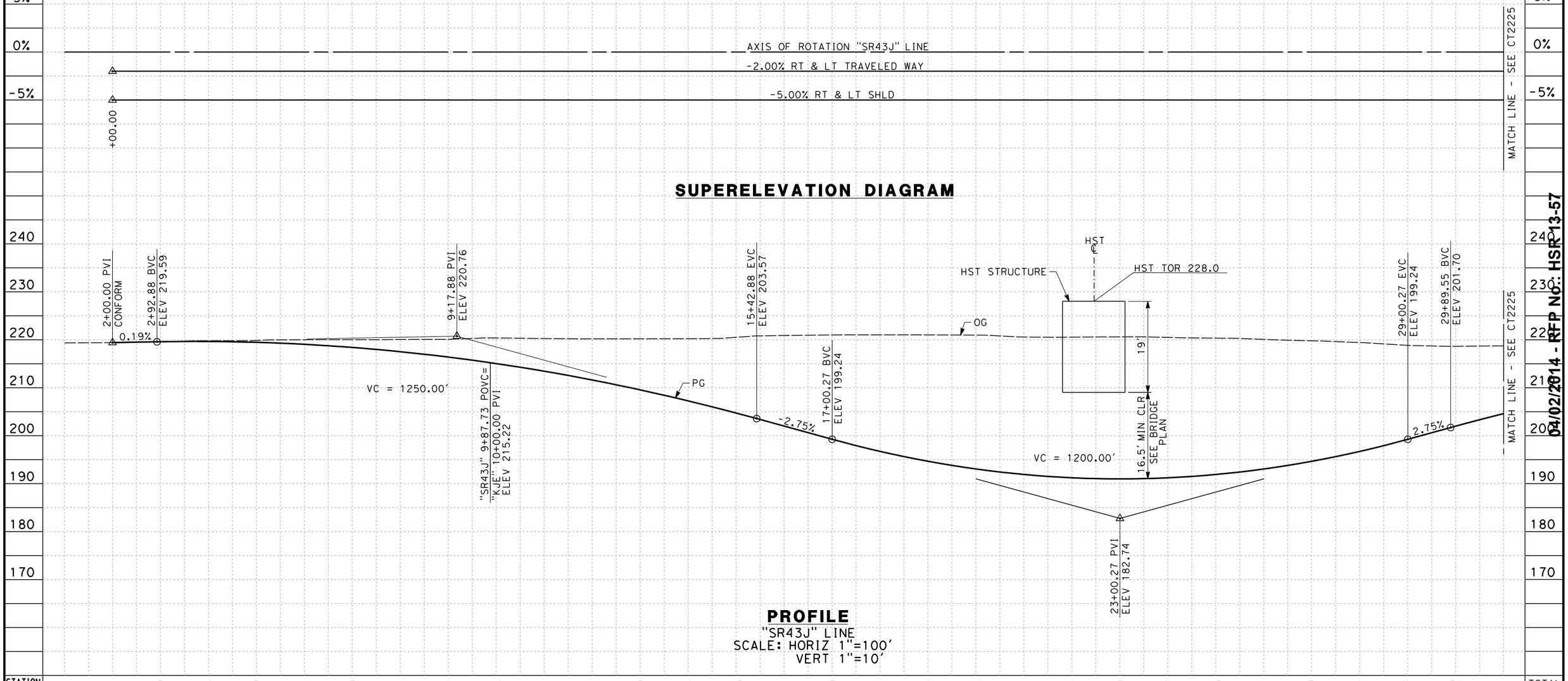


## SUPERELEVATION DIAGRAM

## PROFILE

"SR43J" LINE
SCALE: HORIZ 1"=100'
VERT 1"=10'

| STATION | 1 | 2 | 3 | 4 | 5 | 6 | 7 | 8 | 9 | 10 | 1 | 2 | 3 | 4 | 15 | 6 | 7 | 8 | 9 | 20 | 1 | 2 | 3 | 4 | 25 | 6 | 7 | 8 | 9 | 30 | 1 | TOTAL |
|---|---|---|---|---|---|---|---|---|---|---|---|---|---|---|---|---|---|---|---|---|---|---|---|---|---|---|---|---|---|---|---|---|
| CY Exc | | | | | | | | | | | | | | | | | | | | | | | | | | | | | | | | |
| CY Emb | | | | | | | | | | | | | | | | | | | | | | | | | | | | | | | | |

| REV | DATE | BY | CHK | APP | DESCRIPTION |
|---|---|---|---|---|---|

DESIGNED BY A. CANNON
DRAWN BY E. SUDHAUSEN
CHECKED BY S. BROWN
IN CHARGE R. COFFIN
DATE 12/31/13

**RECORD SET 15% DESIGN SUBMISSION - NOT FOR CONSTRUCTION**

URS | HMM | ARUP
CALIFORNIA HIGH-SPEED TRAIN

CALIFORNIA HIGH-SPEED RAIL AUTHORITY

**CALIFORNIA HIGH-SPEED TRAIN PROJECT**
**FRESNO TO BAKERSFIELD**
KAWEAH SUBSECTION
ALIGNMENT K4
GRADE SEP PROFILE & SUPERELEVATION DIAGRAM
STATE ROUTE 43 (JERSEY AVE)

CONTRACT NO. HSR 06-0003
DRAWING NO. CT2224
SCALE AS SHOWN
SHEET NO. 16 OF 23

RFP NO: HSR13-57
04/02/2014 - RFP

$FILE$ $TIME$ $DATE$ $USER$

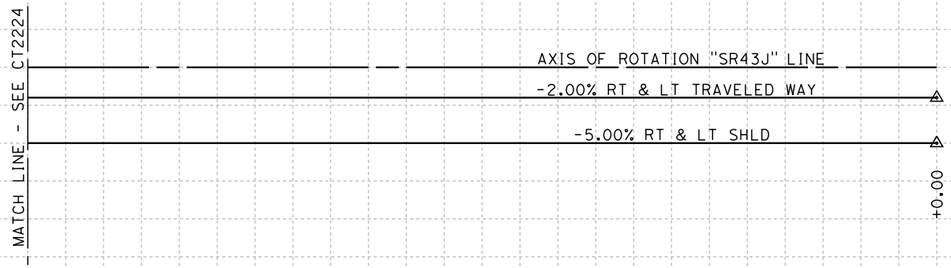


## SUPERELEVATION DIAGRAM

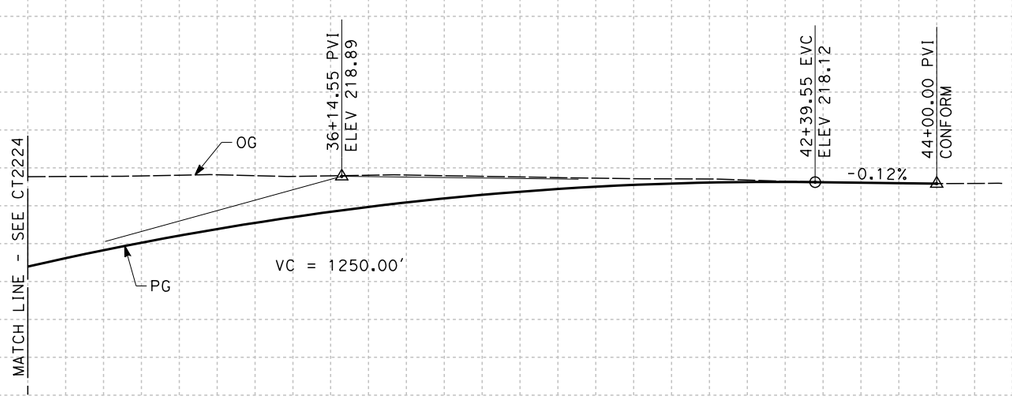


## PROFILE
"SR43J" LINE
SCALE: HORIZ 1"=100'
VERT 1"=10'

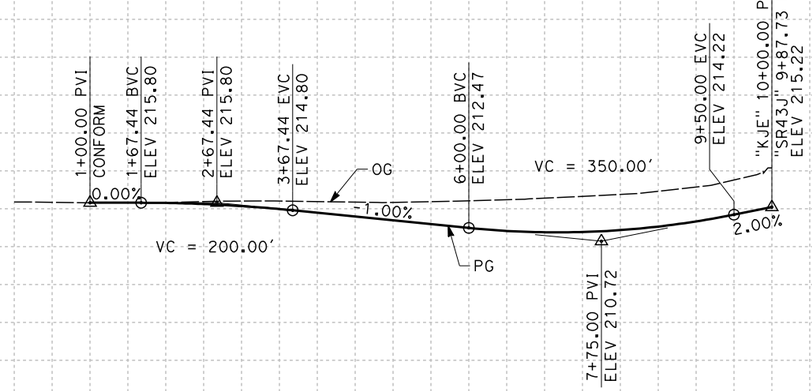


## PROFILE
"KJE" LINE
SCALE: HORIZ 1"=100'
VERT 1"=10'

| STATION | 2 | 3 | 4 | 35 | 6 | 7 | 8 | 9 | 40 | 1 | 2 | 3 | 4 | 45 | 1 | 2 | 3 | 4 | 5 | 6 | 7 | 8 | 9 | 10 | TOTAL |
|---|---|---|---|---|---|---|---|---|---|---|---|---|---|---|---|---|---|---|---|---|---|---|---|---|---|
| CY Exc | | | | | | | | | | | | | | | | | | | | | | | | | |
| CY Emb | | | | | | | | | | | | | | | | | | | | | | | | | |

| REV | DATE | BY | CHK | APP | DESCRIPTION |
|---|---|---|---|---|---|

DESIGNED BY A. CANNON
DRAWN BY E. SUDHAUSEN
CHECKED BY S. BROWN
IN CHARGE R. COFFIN
DATE 12/31/13

**RECORD SET 15% DESIGN SUBMISSION - NOT FOR CONSTRUCTION**

URS | HMM | ARUP
CALIFORNIA HIGH-SPEED TRAIN

CALIFORNIA
HIGH-SPEED RAIL AUTHORITY

**CALIFORNIA HIGH-SPEED TRAIN PROJECT**
**FRESNO TO BAKERSFIELD**
KAWEAH SUBSECTION
ALIGNMENT K4
GRADE SEP PROFILE & SUPERELEVATION DIAGRAM
STATE ROUTE 43 (JERSEY AVE)

CONTRACT NO. HSR 06-0003
DRAWING NO. CT2225
SCALE AS SHOWN
SHEET NO. 17 OF 23

$FILE$ $TIME$ $DATE$ $USER$

04/02/2014 - RFP NO: HSR13-57

NOTES:
1. MINIMUM VERTICAL CLEARANCE FOR HST IS 27' FROM TOP OF RAIL

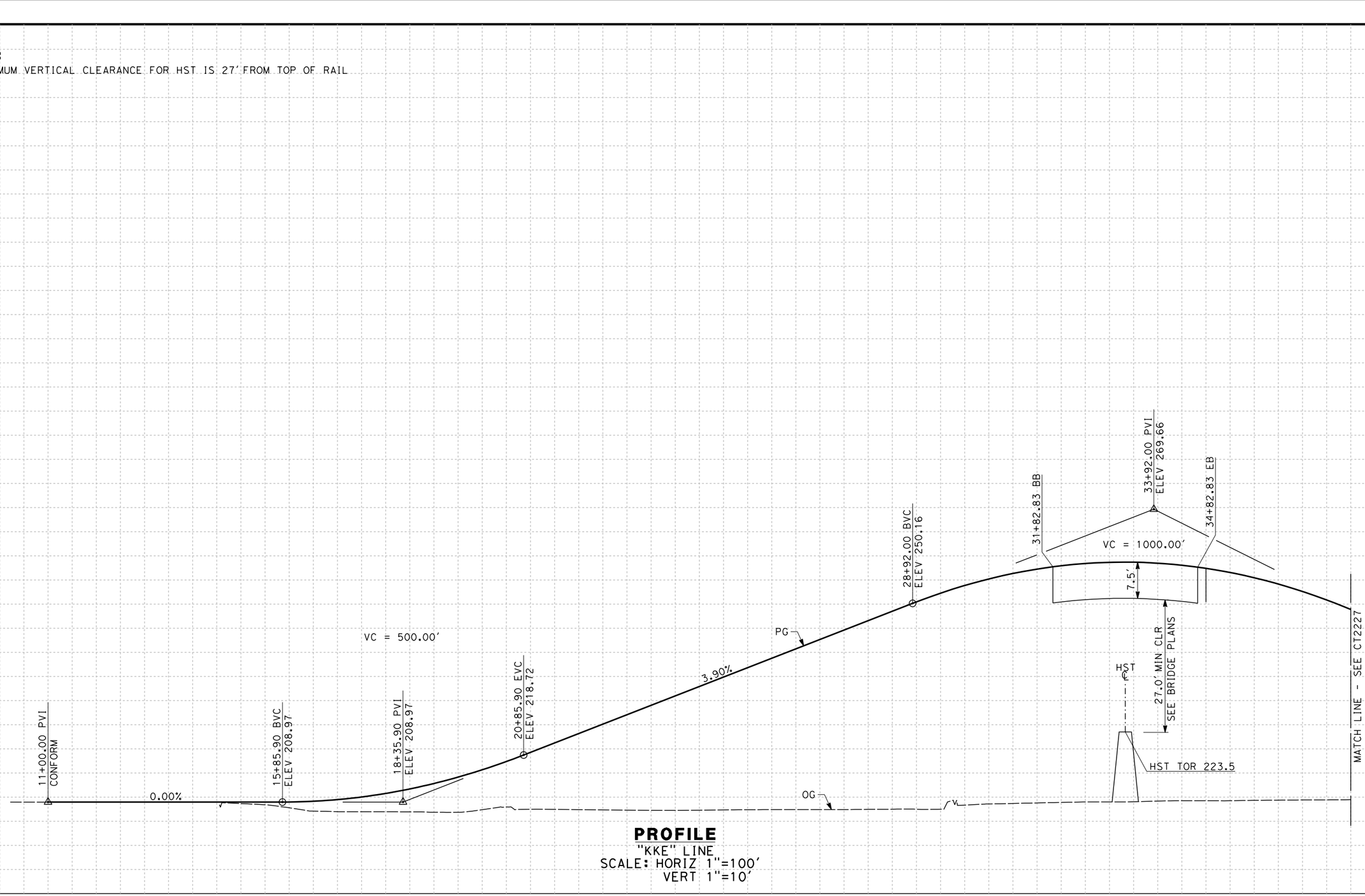


**PROFILE**
"KKE" LINE
SCALE: HORIZ 1"=100'
VERT 1"=10'

| STATION | | 10 | 1 | 2 | 3 | 4 | 15 | 6 | 7 | 8 | 9 | 20 | 1 | 2 | 3 | 4 | 25 | 6 | 7 | 8 | 9 | 30 | 1 | 2 | 3 | 4 | 35 | 6 | 7 | 8 | TOTAL |
|---|---|---|---|---|---|---|---|---|---|---|---|---|---|---|---|---|---|---|---|---|---|---|---|---|---|---|---|---|---|---|---|
| CY | Exc | | | | | | | | | | | | | | | | | | | | | | | | | | | | | | |
| | Emb | | | | | | | | | | | | | | | | | | | | | | | | | | | | | | |

| REV | DATE | BY | CHK | APP | DESCRIPTION |
|---|---|---|---|---|---|

DESIGNED BY A. CANNON
DRAWN BY E. SUDHAUSEN
CHECKED BY S. BROWN
IN CHARGE R. COFFIN
DATE 12/31/13

**RECORD SET 15% DESIGN SUBMISSION - NOT FOR CONSTRUCTION**

URS | HMM | ARUP
CALIFORNIA HIGH-SPEED TRAIN

CALIFORNIA HIGH-SPEED RAIL AUTHORITY

**CALIFORNIA HIGH-SPEED TRAIN PROJECT**
**FRESNO TO BAKERSFIELD**
KAWEAH SUBSECTION
ALIGNMENT K4
GRADE SEPARATION PROFILE
KENT AVE

CONTRACT NO. HSR 06-0003
DRAWING NO. CT2226
SCALE AS SHOWN
SHEET NO. 18 OF 23

04/02/2014 - RFP No: HSR 13-57

$FILE$ $TIME$ $DATE$ $USER$

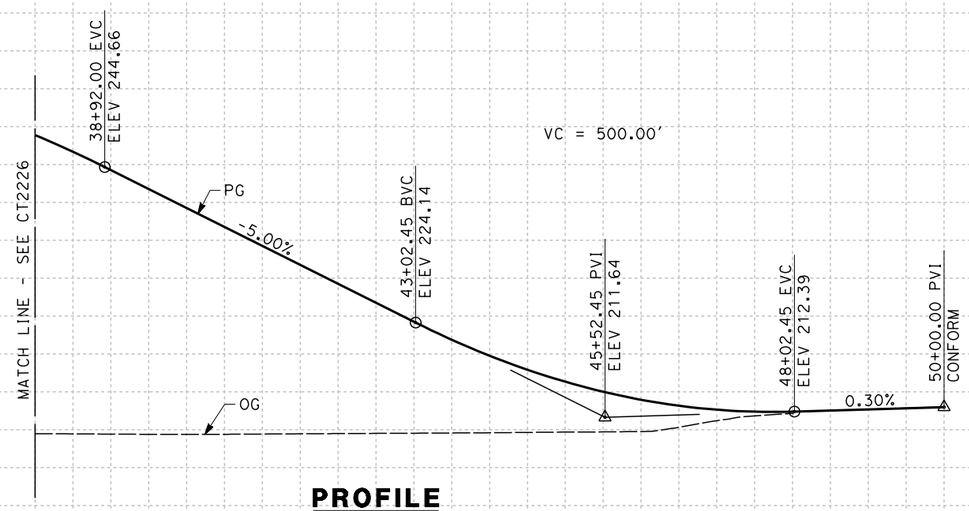


## PROFILE

"KKE" LINE
SCALE: HORIZ 1"=100'
VERT 1"=10'

| STATION | 8 | 9 | 40 | 1 | 2 | 3 | 4 | 45 | 6 | 7 | 8 | 9 | 50 | TOTAL |
|---|---|---|---|---|---|---|---|---|---|---|---|---|---|---|
| CY Exc | | | | | | | | | | | | | | |
| CY Emb | | | | | | | | | | | | | | |

| REV | DATE | BY | CHK | APP | DESCRIPTION |
|---|---|---|---|---|---|

DESIGNED BY A. CANNON
DRAWN BY E. SUDHAUSEN
CHECKED BY S. BROWN
IN CHARGE R. COFFIN
DATE 12/31/13

**RECORD SET 15% DESIGN SUBMISSION - NOT FOR CONSTRUCTION**

URS | HMM | ARUP
CALIFORNIA HIGH-SPEED TRAIN

CALIFORNIA
HIGH-SPEED RAIL AUTHORITY

**CALIFORNIA HIGH-SPEED TRAIN PROJECT**
**FRESNO TO BAKERSFIELD**
KAWEAH SUBSECTION
ALIGNMENT K4
GRADE SEPARATION PROFILE
KENT AVE

CONTRACT NO. HSR 06-0003
DRAWING NO. CT2227
SCALE AS SHOWN
SHEET NO. 19 OF 23

$FILE$
$TIME$
$DATE$
$USER$

RFP NO: HSR13-57
04/02/2014

NOTES:
1. MINIMUM VERTICAL CLEARANCE FOR HST IS 27' FROM TOP OF RAIL

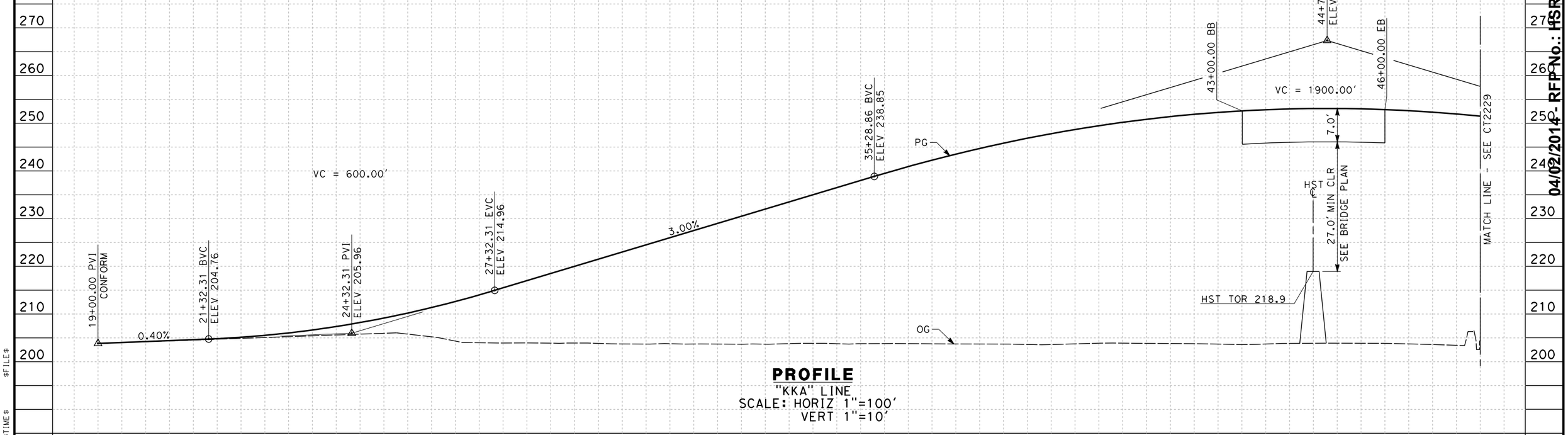


**PROFILE**
"KKA" LINE
SCALE: HORIZ 1"=100'
VERT 1"=10'

| STATION | 9 | 20 | 1 | 2 | 3 | 4 | 25 | 6 | 7 | 8 | 9 | 30 | 1 | 2 | 3 | 4 | 35 | 6 | 7 | 8 | 9 | 40 | 1 | 2 | 3 | 4 | 45 | 6 | 7 | 8 | TOTAL |
|---|---|---|---|---|---|---|---|---|---|---|---|---|---|---|---|---|---|---|---|---|---|---|---|---|---|---|---|---|---|---|---|
| CY Exc | | | | | | | | | | | | | | | | | | | | | | | | | | | | | | | |
| CY Emb | | | | | | | | | | | | | | | | | | | | | | | | | | | | | | | |

$FILE$
$TIME$
$DATE$
$USER$

| REV | DATE | BY | CHK | APP | DESCRIPTION |
|---|---|---|---|---|---|

DESIGNED BY A. CANNON
DRAWN BY E. SUDHAUSEN
CHECKED BY S. BROWN
IN CHARGE R. COFFIN
DATE 12/31/13

**RECORD SET 15% DESIGN SUBMISSION - NOT FOR CONSTRUCTION**

URS | HMM | ARUP
CALIFORNIA HIGH-SPEED TRAIN

CALIFORNIA
HIGH-SPEED RAIL AUTHORITY

**CALIFORNIA HIGH-SPEED TRAIN PROJECT**
**FRESNO TO BAKERSFIELD**
KAWEAH SUBSECTION
ALIGNMENT K4
GRADE SEPARATION PROFILE
KANSAS AVE

CONTRACT NO. HSR 06-0003
DRAWING NO. CT2228
SCALE AS SHOWN
SHEET NO. 20 OF 23

04/02/2014 - RFP No.: HSR 13-57

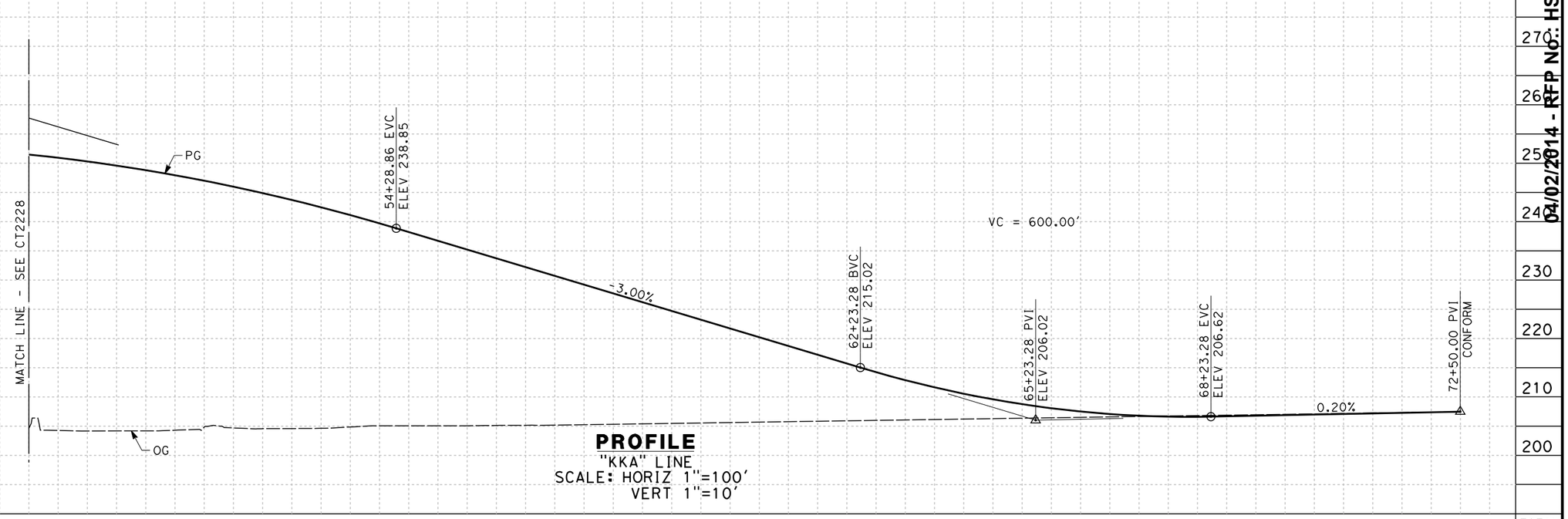


**PROFILE**
"KKA" LINE
SCALE: HORIZ 1"=100'
VERT 1"=10'

| STATION | 8 | 9 | 50 | 1 | 2 | 3 | 4 | 55 | 6 | 7 | 8 | 9 | 60 | 1 | 2 | 3 | 4 | 65 | 6 | 7 | 8 | 9 | 70 | 1 | 2 | 3 | TOTAL |
|---|---|---|---|---|---|---|---|---|---|---|---|---|---|---|---|---|---|---|---|---|---|---|---|---|---|---|---|
| CY Exc | | | | | | | | | | | | | | | | | | | | | | | | | | | |
| CY Emb | | | | | | | | | | | | | | | | | | | | | | | | | | | |

| REV | DATE | BY | CHK | APP | DESCRIPTION |
|---|---|---|---|---|---|
| | | | | | |

DESIGNED BY A. CANNON
DRAWN BY E. SUDHAUSEN
CHECKED BY S. BROWN
IN CHARGE R. COFFIN
DATE 12/31/13

**RECORD SET 15% DESIGN SUBMISSION - NOT FOR CONSTRUCTION**

URS | HMM | ARUP
CALIFORNIA HIGH-SPEED TRAIN

CALIFORNIA
HIGH-SPEED RAIL AUTHORITY

# CALIFORNIA HIGH-SPEED TRAIN PROJECT
# FRESNO TO BAKERSFIELD
KAWEAH SUBSECTION
ALIGNMENT K4
GRADE SEPARATION PROFILE
KANSAS AVE

CONTRACT NO. HSR 06-0003
DRAWING NO. CT2229
SCALE AS SHOWN
SHEET NO. 21 OF 23

04/02/2014 - RFP NO: HSR13-57

$FILE$
$TIME$
$DATE$
$USER$

NOTES:

1. SUPERELEVATION AS SHOWN OR AS DIRECTED BY THE ENGINEER.
2. PAVEMENT SECTIONS ARE SHOWN FOR INFORMATIONAL PURPOSES ONLY. EXACT DIMENSION AND MATERIAL OF THE PAVEMENT SECTION TO BE CONFIRMED.

STRUCTURAL SECTIONS
TYPICAL ROADWAY

[1] 0.50' HMA (TYPE A)
1.00' CL2 AB

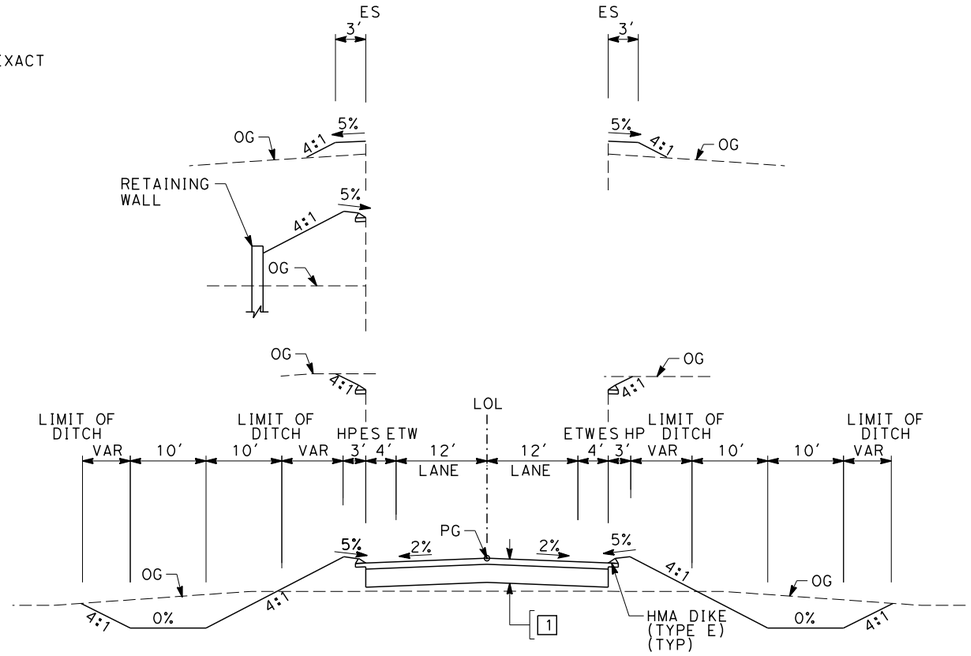


## SECTION A

"KID" 10+00.00 TO 26+43.38
"KID" 29+33.38 TO 46+00.00
"KJE" 1+00.00 TO 10+00.00
"KKE" 11+00.00 TO 31+82.83
"KKE" 34+82.83 TO 50+00.00
"KKA" 19+00.00 TO 43+00.00
"KKA" 46+00.00 TO 72+50.00

TABLE OF DESIGN SPEEDS

| STREET NAME | ALIGNMENT DESIGNATION | DESIGN SPEED | CRITERIA/JURISDICTION |
|---|---|---|---|
| IDAHO AVE | KID | 55 | HDM/KINGS COUNTY |
| JACKSON AVE | KJA | 55 | HDM/KINGS COUNTY |
| SR 43 (JERSEY AVE) | SR43J | 70 | HDM/CALTRANS |
| KENT AVE | KKE | 45 | HDM/KINGS COUNTY |
| KANSAS AVE | KKA | 60 | HDM/KINGS COUNTY |

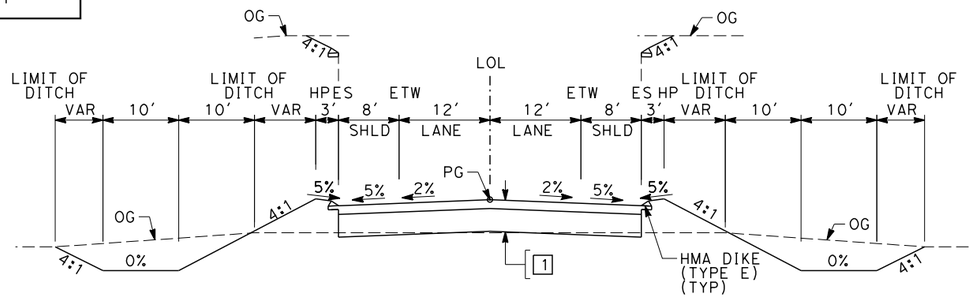


## SECTION B

"KJA" 11+00.00 TO 25+52.71
"KJA" 28+32.71 TO 47+00.00

04/02/2014 - RFP No.: HSR 13-57

$USER$ $TIME$ $DATE$ $FILE$

| REV | DATE | BY | CHK | APP | DESCRIPTION |
|---|---|---|---|---|---|

DESIGNED BY A. CANNON
DRAWN BY E. SUDHAUSEN
CHECKED BY S. BROWN
IN CHARGE R. COFFIN
DATE 12/31/13

**RECORD SET 15% DESIGN SUBMISSION - NOT FOR CONSTRUCTION**

URS | HMM | ARUP
CALIFORNIA HIGH-SPEED TRAIN

CALIFORNIA
HIGH-SPEED RAIL AUTHORITY

**CALIFORNIA HIGH-SPEED TRAIN PROJECT**
**FRESNO TO BAKERSFIELD**
KAWEAH SUBSECTION
ALIGNMENT K4
ROADWAY / GRADE SEPARATION
TYPICAL CROSS SECTIONS

CONTRACT NO. HSR 06-0003
DRAWING NO. CT3230
SCALE NO SCALE
SHEET NO. 22 OF 23

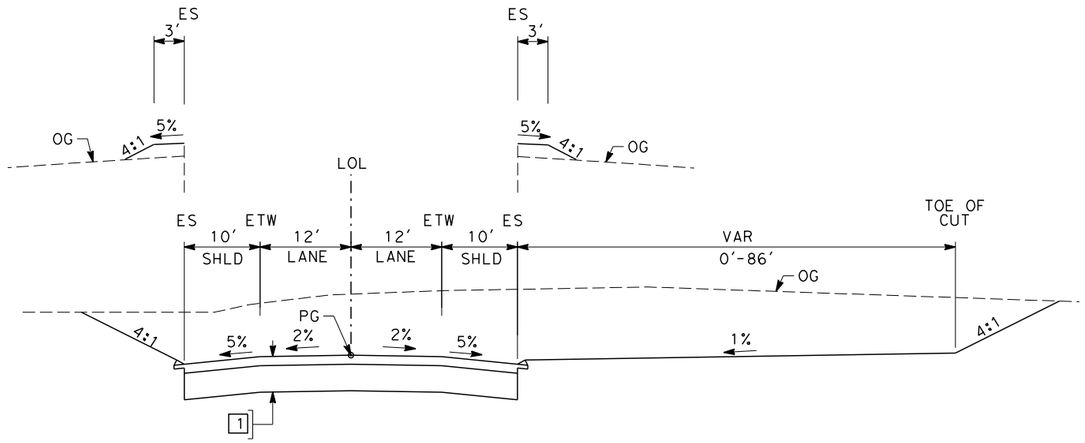


## SECTION C

"SR43J" 2+00.00 TO 44+00.00

04/02/2014 - RFP No.: HSR 13-57

| REV | DATE | BY | CHK | APP | DESCRIPTION |
|---|---|---|---|---|---|
| | | | | | |
| | | | | | |
| | | | | | |
| | | | | | |
| | | | | | |

DESIGNED BY A. CANNON
DRAWN BY E. SUDHAUSEN
CHECKED BY S. BROWN
IN CHARGE R. COFFIN
DATE 12/31/13

**RECORD SET 15% DESIGN SUBMISSION - NOT FOR CONSTRUCTION**

URS | HMM | ARUP
CALIFORNIA HIGH-SPEED TRAIN

CALIFORNIA
HIGH-SPEED RAIL AUTHORITY

**CALIFORNIA HIGH-SPEED TRAIN PROJECT**
**FRESNO TO BAKERSFIELD**
KAWEAH SUBSECTION
ALIGNMENT K4
ROADWAY / GRADE SEPARATION
TYPICAL CROSS SECTIONS

CONTRACT NO. HSR 06-0003
DRAWING NO. CT3231
SCALE NO SCALE
SHEET NO. 23 OF 23

$USER$ $TIME$ $DATE$ $FILE$

## STREET CLOSURE

| STREET NAME | HST ALIGNMENT STA | LOCAL STANDARD |
|---|---|---|
| NEWARK AVE | 2708+50.00 | CITY OF CORCORAN |
| 5 1/2 AVE | 2719+00.00 | CITY OF CORCORAN |
| NILES AVE | 2727+50.00 | CITY OF CORCORAN |

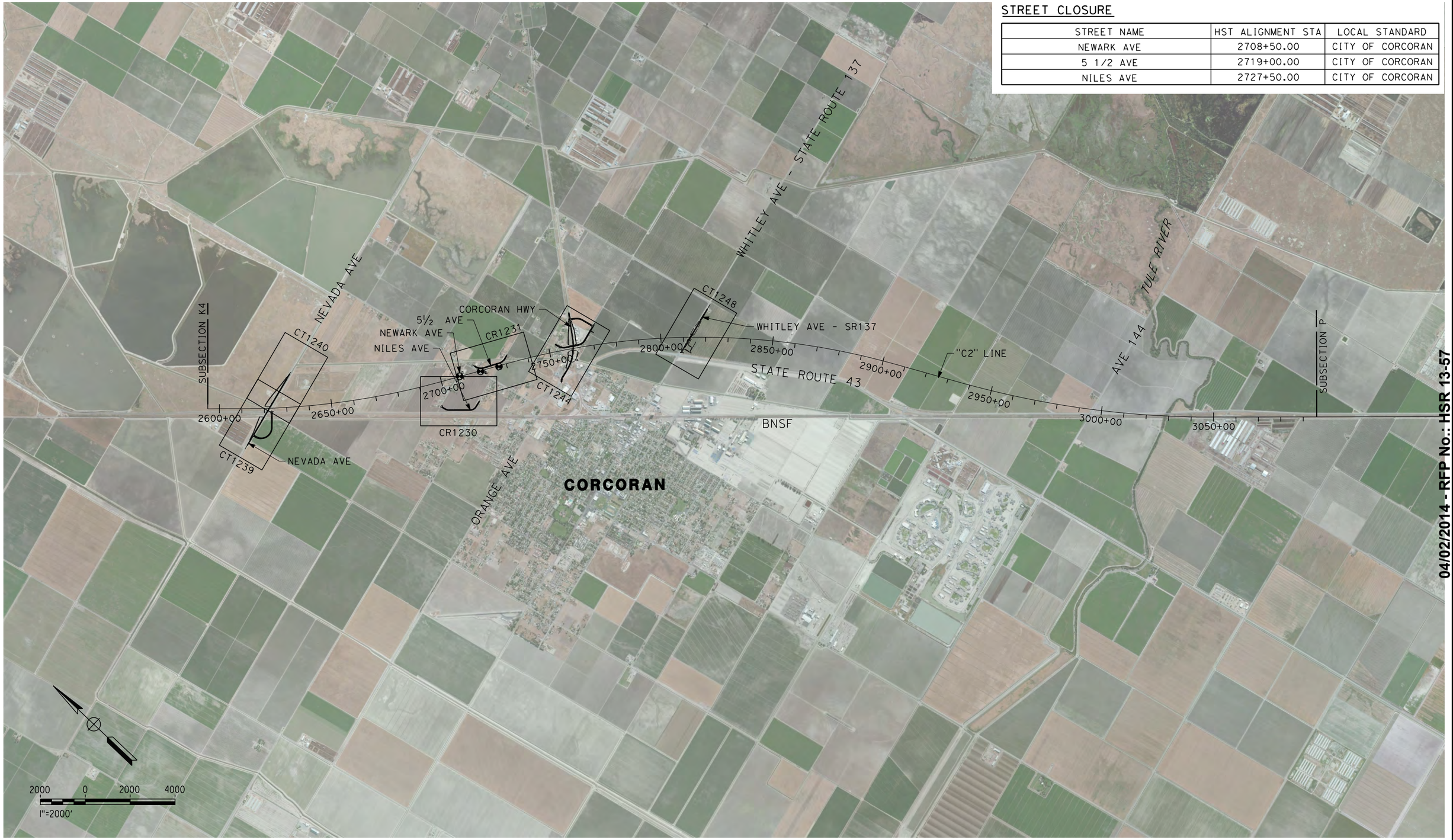


04/02/2014 - RFP No.: HSR 13-57

| REV | DATE | BY | CHK | APP | DESCRIPTION |
|---|---|---|---|---|---|
| | | | | | |

DESIGNED BY A. POLING
DRAWN BY E. SUDHAUSEN
CHECKED BY S. BROWN
IN CHARGE R. COFFIN
DATE 12/31/13

**RECORD SET 15% DESIGN SUBMISSION - NOT FOR CONSTRUCTION**

URS | HMM | ARUP
CALIFORNIA HIGH-SPEED TRAIN

CALIFORNIA
HIGH-SPEED RAIL AUTHORITY

# CALIFORNIA HIGH-SPEED TRAIN PROJECT
# FRESNO TO BAKERSFIELD

CORCORAN BYPASS SUBSECTION
ALIGNMENT C2
ROADWAY / GRADE SEPARATION
KEY MAP

CONTRACT NO. HSR 06-0003
DRAWING NO. CB0075
SCALE AS SHOWN
SHEET NO. 1 OF 18

$USER$ $DATE$ $TIME$ $FILE$

## RETAINING WALL DATA

| NO. | LOCATION BEGIN | LOCATION END | LENGTH | MAX HEIGHT |
|---|---|---|---|---|
| 1 | 16.00' RT 07+92.46 | 16.00' RT 16+50.00 | 858' | 40' |
| 2 | 16.00' RT 09+01.22 | 16.00' RT 36+14.49 | 1394' | 45' |

## LINE DATA

| NO. | BEARING | DISTANCE |
|---|---|---|
| 1 | S 89°37'04" E | 3946.13' |
| 2 | S 00°22'56" W | 128.98' |
| 3 | N 56°47'46" E | 771.32' |

## CURVE DATA

| NO. | R | Δ | T | L |
|---|---|---|---|---|
| (1) | 475.00' | 128°35'10" | 832.53' | 999.70' |

SCALE: 1"=100'

"C2" LINE
HST ROW
BNSF ROW
BNSF
SR 43
"KNE" 0+00.00 PI
"KNE" 2+00.00 CONFORM
"KNE" 7+16.45 POT= "KNEC" 0+00.00 PI
DRAINAGE DITCH (TYP)
LIMIT OF DITCH TOE OF FILL
LIMIT OF DITCH
ROADWAY ROW
"KNE" LINE
MBGR
NEVADA AVE
EP
R=60'
CULVERT
"KNEC" 1+28.98 BC
EXISTING CANAL
RET WALL NO.1
BB
CANAL REALIGNMENT
"KNE" 21+20.49 POT= "C2" 2622+21.78 POT
TOE OF FILL
ROADWAY ROW
"KNEC" 11+28.68 EC
"KNEC" LINE
AT GRADE CROSSING
"KNEC" 18+42.83 CONFORM
"KNEC" 19+00.00 PI
TRACTION POWER FACILITY (NORTH OPTION)
TRACTION POWER FACILITY (SOUTH OPTION)
HST ROW
2615+00
2620+00
2625+00
2630+00
CANAL REALIGNMENT
LIMIT OF DITCH TOE OF FILL
LIMIT OF DITCH
ROADWAY ROW
CULVERT
MBGR
EB
RET WALL NO.2
ROADWAY ROW
MATCH LINE - SEE CT1240
HST ROW
ACCESS ROAD

04/02/2014 - RFP No.: HSR 13-57

$FILE$
$TIME$
$DATE$
$USER$

| REV | DATE | BY | CHK | APP | DESCRIPTION |
|---|---|---|---|---|---|

DESIGNED BY A. POLING
DRAWN BY E. SUDHAUSEN
CHECKED BY S. BROWN
IN CHARGE R. COFFIN
DATE 12/31/13

**RECORD SET 15% DESIGN SUBMISSION - NOT FOR CONSTRUCTION**

URS | HMM | ARUP
CALIFORNIA HIGH-SPEED TRAIN

CALIFORNIA HIGH-SPEED RAIL AUTHORITY

# CALIFORNIA HIGH-SPEED TRAIN PROJECT
# FRESNO TO BAKERSFIELD
CORCORAN BYPASS SUBSECTION
ALIGNMENT C2
GRADE SEPARATION LAYOUT
NEVADA AVE

CONTRACT NO. HSR 06-0003
DRAWING NO. CT1239
SCALE AS SHOWN
SHEET NO. 2 OF 18

## RETAINING WALL DATA

| NO. | LOCATION BEGIN | LOCATION END | LENGTH | MAX HEIGHT |
|---|---|---|---|---|
| 2 | 16.00' RT 09+01.22 | 16.00' RT 36+14.49 | 1394' | 35' |

## LINE DATA

| NO. | BEARING | DISTANCE |
|---|---|---|
| 1 | S 89°37'04" E | 3946.13' |

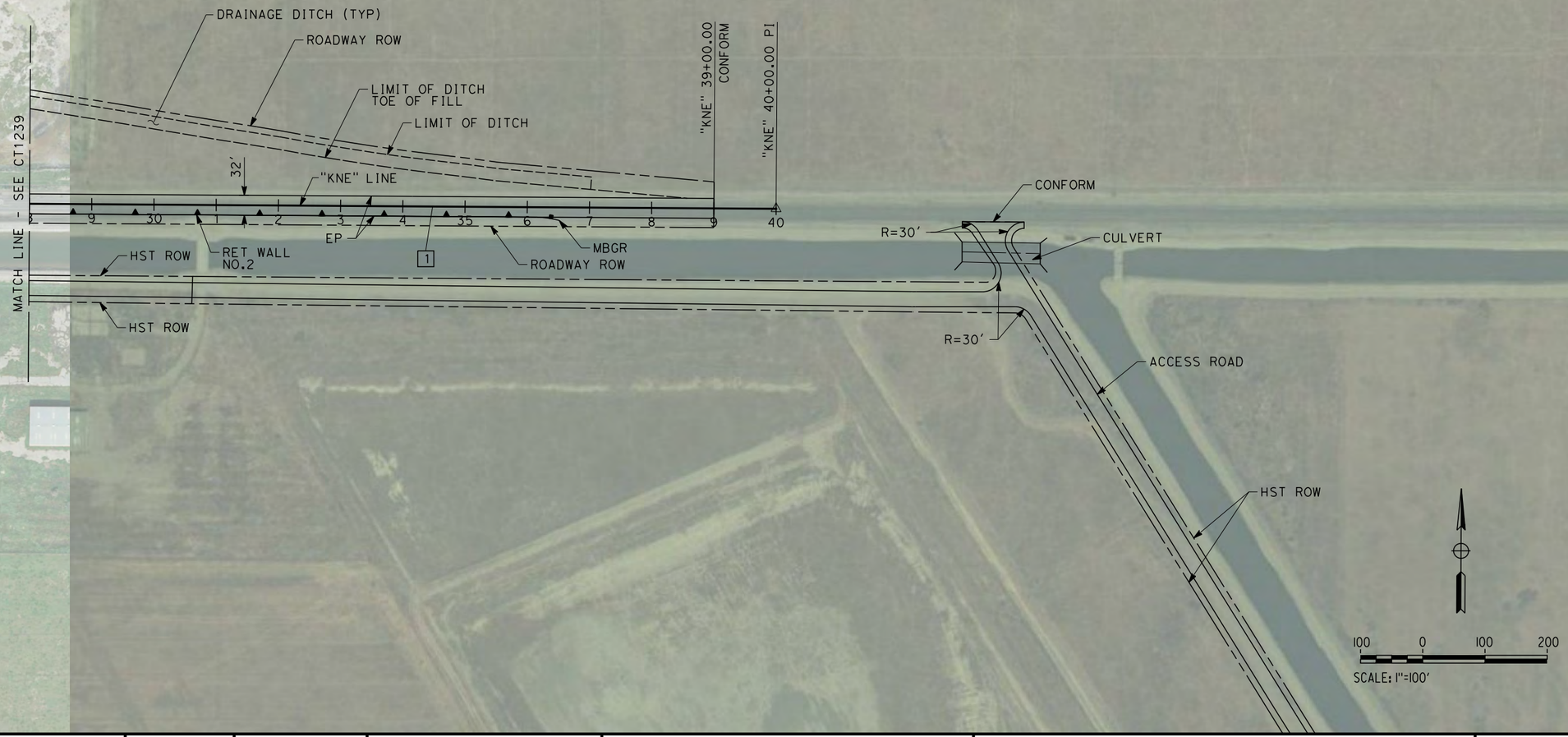


04/02/2014 - RFP No.: HSR 13-57

$FILE$ $TIME$ $DATE$ $USER$

| REV | DATE | BY | CHK | APP | DESCRIPTION |
|---|---|---|---|---|---|

DESIGNED BY A. POLING
DRAWN BY E. SUDHAUSEN
CHECKED BY S. BROWN
IN CHARGE R. COFFIN
DATE 12/31/13

**RECORD SET 15% DESIGN SUBMISSION - NOT FOR CONSTRUCTION**

URS | HMM | ARUP
CALIFORNIA HIGH-SPEED TRAIN

CALIFORNIA HIGH-SPEED RAIL AUTHORITY

# CALIFORNIA HIGH-SPEED TRAIN PROJECT
# FRESNO TO BAKERSFIELD
CORCORAN BYPASS SUBSECTION
ALIGNMENT C2
GRADE SEPARATION LAYOUT
NEVADA AVE

CONTRACT NO. HSR 06-0003
DRAWING NO. CT1240
SCALE AS SHOWN
SHEET NO. 3 OF 18

## LINE DATA

| NO. | BEARING | DISTANCE |
|---|---|---|
| 1 | N56°25'17"E | 57.54' |
| 2 | S89°10'45"E | 362.55' |
| 3 | N51°33'15"E | 1269.91' |
| 4 | S00°05'56"W | 173.12' |
| 5 | S41°24'27"E | 594.83' |
| 6 | S89°48'14"E | 904.95' |
| 7 | S38°26'45"E | 240.13' |
| 8 | S00°00'00"E | 550.87' |

## CURVE DATA

| NO. | R | Δ | T | L |
|---|---|---|---|---|
| ① | 350.00' | 34°23'58" | 108.34' | 210.13' |
| ② | 2000.00' | 39°16'00" | 713.48' | 1370.67' |
| ③ | 425.00' | 41°30'22" | 161.04' | 307.88' |
| ④ | 425.00' | 48°23'47" | 190.99' | 358.99' |
| ⑤ | 500.00' | 38°26'45" | 174.34' | 335.50' |

## RETAINING WALL DATA

| NO. | LOCATION BEGIN | LOCATION END | LENGTH | MAX HEIGHT |
|---|---|---|---|---|
| 1 | 20.00' RT 12+67.68 | 20.00' RT 21+94.84 | 933' | 40' |
| 2 | 20.00' RT 28+19.66 | 20.00' RT 34+69.20 | 651' | 45' |
| 3 | 20.00' LT 14+43.11 | 76.73' LT 17+07.00 | 318' | 14' |

RADIO SITE (SOUTH OPTION)
HST ROW
ACCESS ROAD
5TH AVE
2750+00
CANAL REALIGNMENT
CANAL
2755+00
"K5A" 0+00.00 PI CONFORM
ROADWAY ROW
R=15'
TCE
"K5A" 1+73.12 BC
"K5A" 4+81.00 EC
"KWA" 27+74.35 POC=
"K5A" 8+46.65 POT
"KWA" 30+00.89 EC
CORCORAN HWY (WAUKENA AVE)
LIMIT OF DITCH
LIMIT OF DITCH TOE OF FILL
RETAINING WALL NO. 2
"K5A" 10+75.83 BC
"KWA" 39+67.50
"KOR" 10+00.00
"KWA" 42+70.81 PI CONFORM
R=60'
CULVERT
MBGR
ORANGE AVE CONNECTOR
"KOR" 12+40.13 BC
"KOR" 15+75.63 EC
TOE OF FILL
"KOR" LINE
EP
"K5A" 23+39.77 PI
"K5A" 22+57.76 CONFORM
DRAINAGE DITCH (TYP)
2760+00
EB
BB
MBGR (TYP)
"KWA" 12+67.68 EC
"KWA" 16+30.23 BC
RETAINING WALL NO. 3
"KWA" LINE
40'
"KWA" 10+57.54 BC CONFORM
"KWA" 10+00.00 PI
CONFORM
CULVERT
TCE
RETAINING WALL NO. 1
EXISTING CULVERT
R=40'
R=50'
"KWA" 26+62.61 POC=
"C2" 2760+67.70 POC
8TH AVE - SR 43
"K5A" 14+34.82 EC
"K5A" LINE
"C2" LINE
HST ROW
2765+00
2770+00
ORANGE AVE
R=15'
"KOR" 21+26.50
"K5A" 21+65.70
CONFORM
SCALE: 1"=100'

04/02/2014 - RFP No.: HSR 13-57

$FILE$ $TIME$ $DATE$ $USER$

| REV | DATE | BY | CHK | APP | DESCRIPTION |
|---|---|---|---|---|---|

DESIGNED BY A. POLING
DRAWN BY E. SUDHAUSEN
CHECKED BY S. BROWN
IN CHARGE R. COFFIN
DATE 12/31/13

**RECORD SET 15% DESIGN SUBMISSION - NOT FOR CONSTRUCTION**

URS | HMM | ARUP
CALIFORNIA HIGH-SPEED TRAIN

CALIFORNIA HIGH-SPEED RAIL AUTHORITY

# CALIFORNIA HIGH-SPEED TRAIN PROJECT
## FRESNO TO BAKERSFIELD
CORCORAN BYPASS SUBSECTION
ALIGNMENT C2
GRADE SEPARATION LAYOUT
CORCORAN HWY

CONTRACT NO. HSR 06-0003
DRAWING NO. CT1244
SCALE AS SHOWN
SHEET NO. 4 OF 18

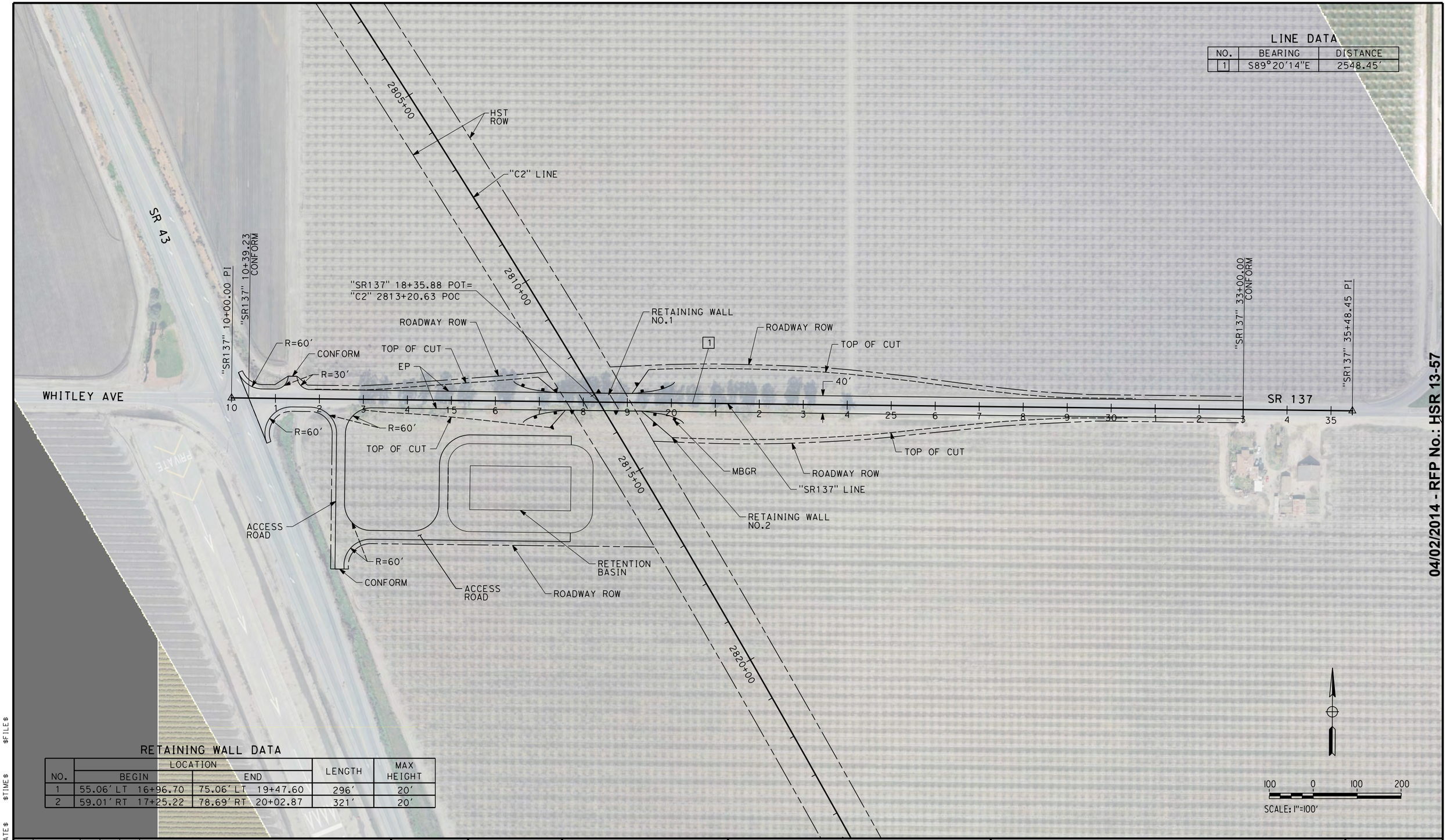


## RETAINING WALL DATA

| NO. | LOCATION BEGIN | LOCATION END | LENGTH | MAX HEIGHT |
|---|---|---|---|---|
| 1 | 55.06' LT 16+96.70 | 75.06' LT 19+47.60 | 296' | 20' |
| 2 | 59.01' RT 17+25.22 | 78.69' RT 20+02.87 | 321' | 20' |

04/02/2014 - RFP No.: HSR 13-57

$FILE$ $TIME$ $DATE$ $USER$

| REV | DATE | BY | CHK | APP | DESCRIPTION |
|---|---|---|---|---|---|

DESIGNED BY A. POLING
DRAWN BY E. SUDHAUSEN
CHECKED BY S. BROWN
IN CHARGE R. COFFIN
DATE 12/31/13

**RECORD SET 15% DESIGN SUBMISSION - NOT FOR CONSTRUCTION**

URS | HMM | ARUP
CALIFORNIA HIGH-SPEED TRAIN

CALIFORNIA HIGH-SPEED RAIL AUTHORITY

# CALIFORNIA HIGH-SPEED TRAIN PROJECT FRESNO TO BAKERSFIELD

CORCORAN BYPASS SUBSECTION
ALIGNMENT C2
GRADE SEPARATION LAYOUT
WHITLEY AVE/STATE ROUTE 137

CONTRACT NO. HSR 06-0003
DRAWING NO. CT1248
SCALE AS SHOWN
SHEET NO. 5 OF 18

NOTES:

1. MINIMUM VERTICAL CLEARANCE FOR HST IS 27' FROM TOP OF RAIL
2. MINIMUM VERTICAL CLEARANCE OVER BNSF IS 24.0' FROM TOP OF RAIL
3. MINIMUM VERTICAL CLEARANCE OVER STATE HIGHWAY IS 16.5' FROM ROAD SURFACE

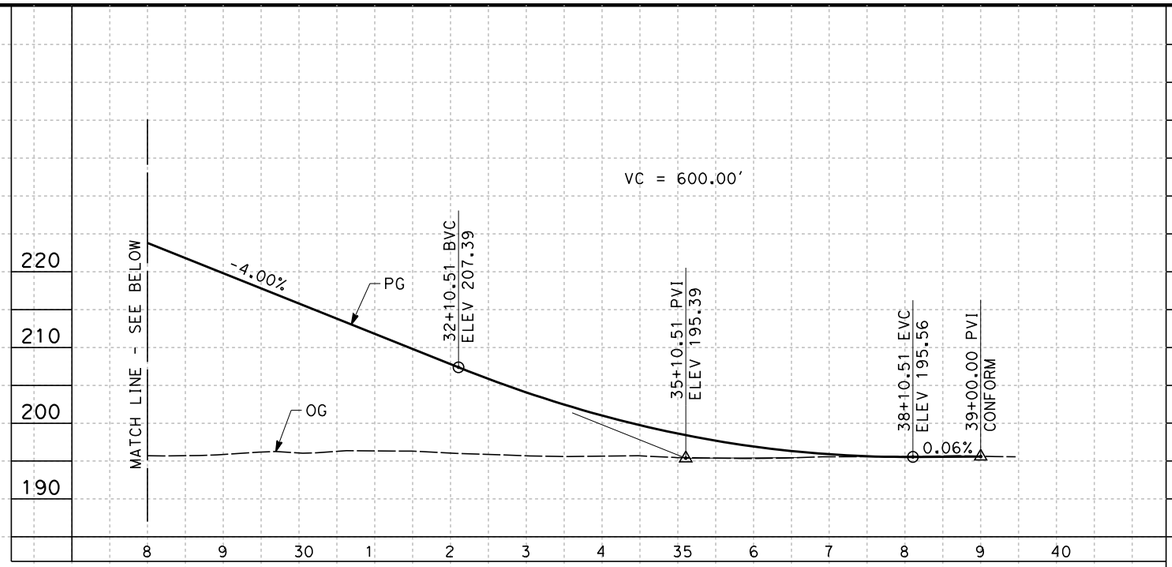


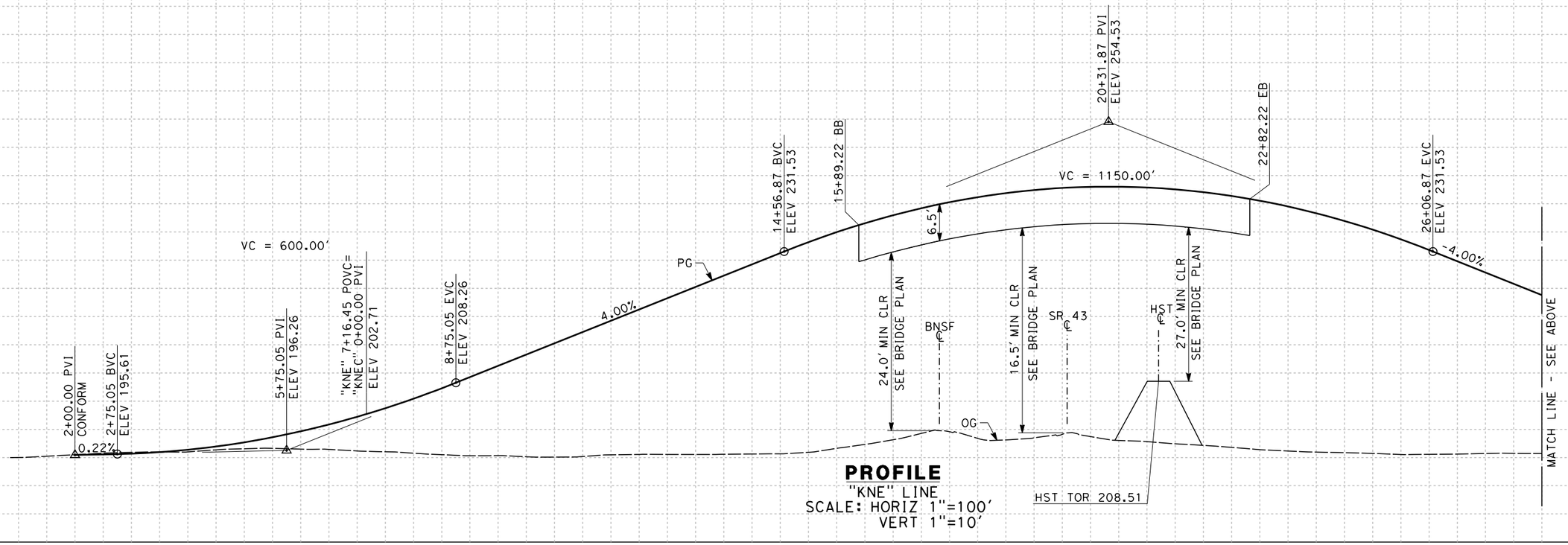


**PROFILE**
"KNE" LINE
SCALE: HORIZ 1"=100'
VERT 1"=10'

| REV | DATE | BY | CHK | APP | DESCRIPTION |
|---|---|---|---|---|---|

DESIGNED BY A. POLING
DRAWN BY E. SUDHAUSEN
CHECKED BY S. BROWN
IN CHARGE R. COFFIN
DATE 12/31/13

**RECORD SET 15% DESIGN SUBMISSION - NOT FOR CONSTRUCTION**

URS | HMM | ARUP
CALIFORNIA HIGH-SPEED TRAIN

CALIFORNIA
HIGH-SPEED RAIL AUTHORITY

**CALIFORNIA HIGH-SPEED TRAIN PROJECT**
**FRESNO TO BAKERSFIELD**
CORCORAN BYPASS SUBSECTION
ALIGNMENT C2
GRADE SEPARATION PROFILE
NEVADA AVE

CONTRACT NO. HSR 06-0003
DRAWING NO. CT2239
SCALE AS SHOWN
SHEET NO. 6 OF 18

04/02/2014 - RFP No.: HSR 13-57

joshua.thomas 12/27/2013 4:17:28 PM c:\pwworking\hmm\external\joshua.thomas-arup.com\d0124168\VFB-CT-2239-C2.dgn

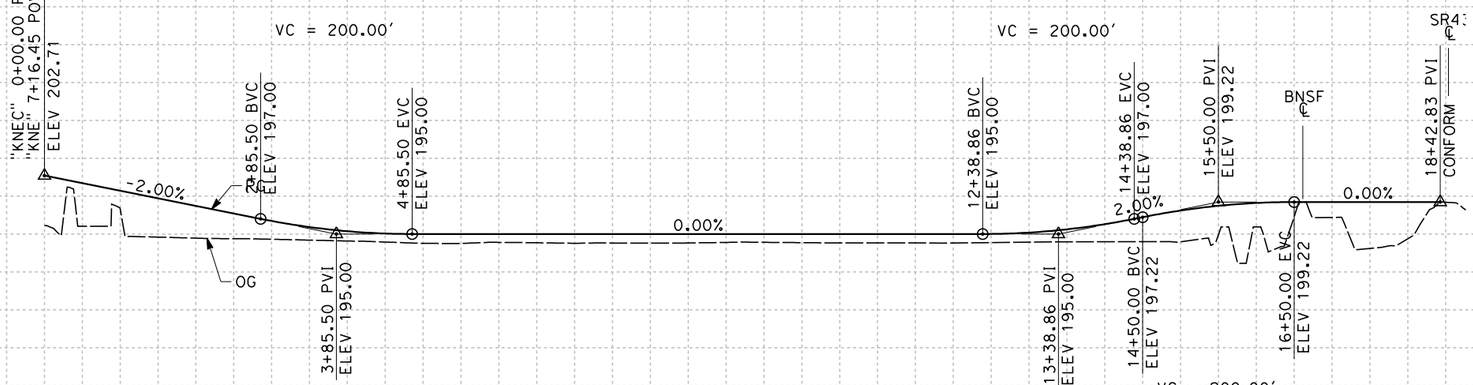


## PROFILE

"KNEC" LINE
SCALE: HORIZ 1"=100'
VERT 1"=10'

| STATION | 0 | 1 | 2 | 3 | 4 | 5 | 6 | 7 | 8 | 9 | 10 | 1 | 2 | 3 | 4 | 15 | 6 | 7 | 8 | TOTAL |
|---|---|---|---|---|---|---|---|---|---|---|---|---|---|---|---|---|---|---|---|---|
| CY Exc | | | | | | | | | | | | | | | | | | | | |
| CY Emb | | | | | | | | | | | | | | | | | | | | |

| REV | DATE | BY | CHK | APP | DESCRIPTION |
|---|---|---|---|---|---|

DESIGNED BY A. POLING
DRAWN BY E. SUDHAUSEN
CHECKED BY S. BROWN
IN CHARGE R. COFFIN
DATE 12/31/13

**RECORD SET 15% DESIGN SUBMISSION - NOT FOR CONSTRUCTION**

URS | HMM | ARUP
CALIFORNIA HIGH-SPEED TRAIN

CALIFORNIA HIGH-SPEED RAIL AUTHORITY

# CALIFORNIA HIGH-SPEED TRAIN PROJECT
# FRESNO TO BAKERSFIELD
CORCORAN BYPASS SUBSECTION
ALIGNMENT C2
GRADE SEPARATION PROFILE
NEVADA AVE CONNECTOR

CONTRACT NO. HSR 06-0003
DRAWING NO. CT2240
SCALE AS SHOWN
SHEET NO. 7 OF 18

04/02/2014 - RFP No.: HSR 13-57

joshua.thomas 12/27/2013 4:17:49 PM c:\pwworking\hmm\external\joshua.thomas-arup.com\d0124168\VFB-CT-2240-C2.dgn

NOTES:
1. MINIMUM VERTICAL CLEARANCE OVER HST IS 27' FROM TOP OF RAIL
2. MINIMUM VERTICAL CLEARANCE OVER LOCAL STREET IS 16.5' FROM ROAD SURFACE

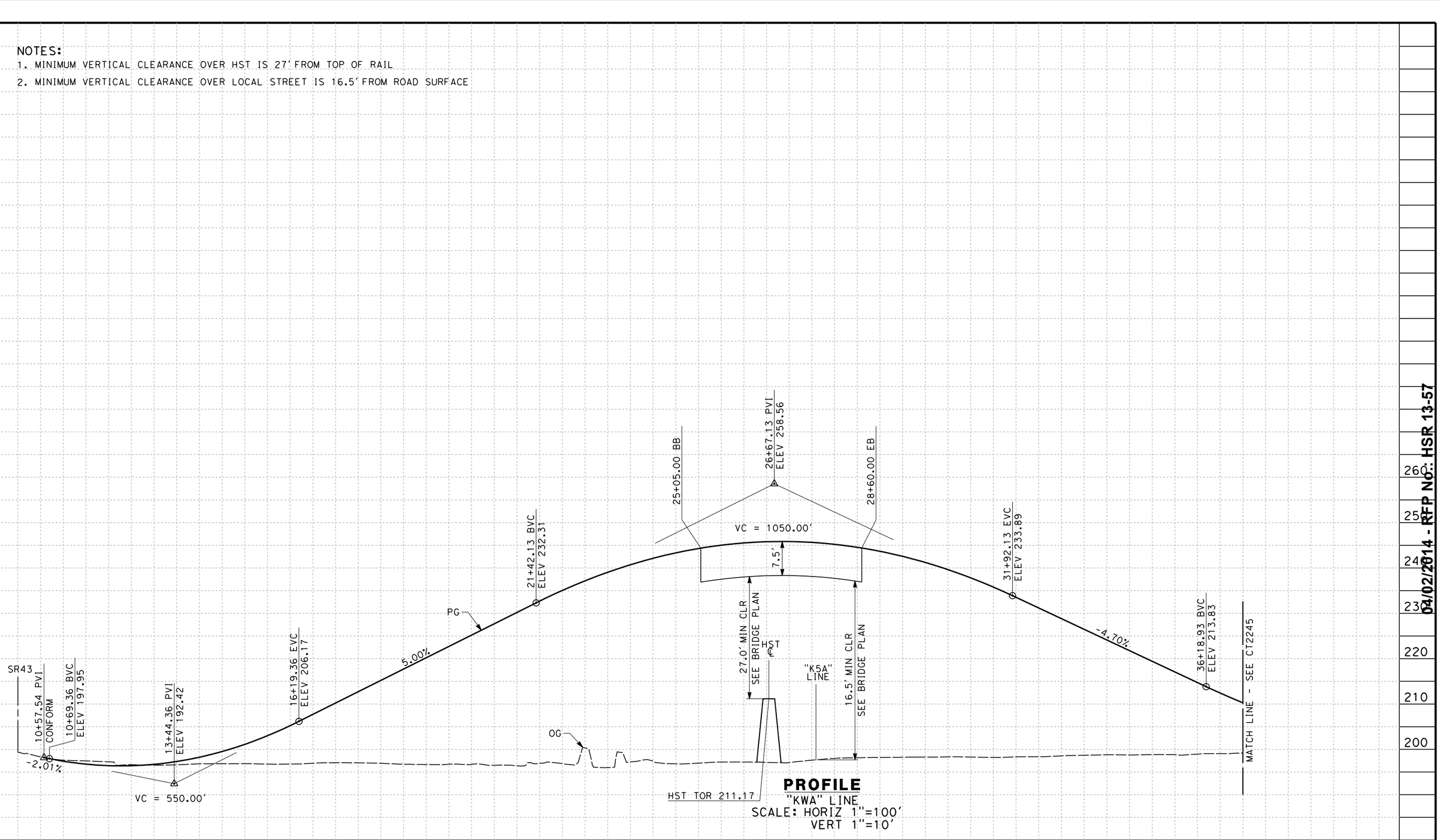


**PROFILE**
"KWA" LINE
SCALE: HORIZ 1"=100'
VERT 1"=10'

| STATION | 10 | 1 | 2 | 3 | 4 | 15 | 6 | 7 | 8 | 9 | 20 | 1 | 2 | 3 | 4 | 25 | 6 | 7 | 8 | 9 | 30 | 1 | 2 | 3 | 4 | 35 | 6 | 7 | TOTAL |
|---|---|---|---|---|---|---|---|---|---|---|---|---|---|---|---|---|---|---|---|---|---|---|---|---|---|---|---|---|---|
| CY Exc | | | | | | | | | | | | | | | | | | | | | | | | | | | | | |
| CY Emb | | | | | | | | | | | | | | | | | | | | | | | | | | | | | |

| REV | DATE | BY | CHK | APP | DESCRIPTION |
|---|---|---|---|---|---|

DESIGNED BY A. POLING
DRAWN BY E. SUDHAUSEN
CHECKED BY S. BROWN
IN CHARGE R. COFFIN
DATE 12/31/13

**RECORD SET 15% DESIGN SUBMISSION - NOT FOR CONSTRUCTION**

URS | HMM | ARUP
CALIFORNIA HIGH-SPEED TRAIN

CALIFORNIA
HIGH-SPEED RAIL AUTHORITY

**CALIFORNIA HIGH-SPEED TRAIN PROJECT**
**FRESNO TO BAKERSFIELD**
CORCORAN BYPASS SUBSECTION
ALIGNMENT C2
GRADE SEPARATION PROFILE
CORCORAN HWY

CONTRACT NO. HSR 06-0003
DRAWING NO. CT2244
SCALE AS SHOWN
SHEET NO. 8 OF 18

04/02/2014 - RFP NO: HSR 13-57

joshua.thomas 12/27/2013 4:18:08 PM c:\pwworking\hmm\external\joshua.thomas-arup.com\d0124168\FB-CT-2244-C2.dgn

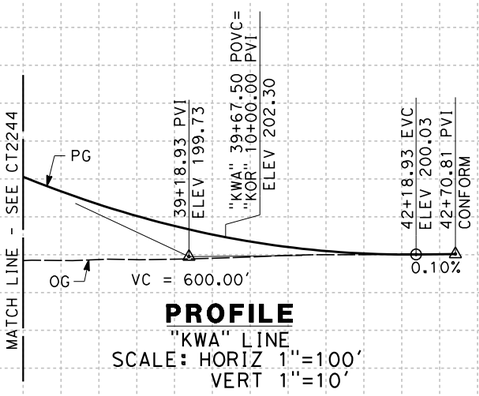


**PROFILE**
"KWA" LINE
SCALE: HORIZ 1"=100'
VERT 1"=10'

| STATION | 7 | 8 | 9 | 40 | 1 | 2 | 3 | TOTAL |
|---|---|---|---|---|---|---|---|---|
| CY Exc | | | | | | | | |
| CY Emb | | | | | | | | |

| REV | DATE | BY | CHK | APP | DESCRIPTION |
|---|---|---|---|---|---|

DESIGNED BY A. POLING
DRAWN BY E. SUDHAUSEN
CHECKED BY S. BROWN
IN CHARGE R. COFFIN
DATE 12/31/13

**RECORD SET 15% DESIGN SUBMISSION - NOT FOR CONSTRUCTION**

URS | HMM | ARUP
CALIFORNIA HIGH-SPEED TRAIN

CALIFORNIA HIGH-SPEED RAIL AUTHORITY

**CALIFORNIA HIGH-SPEED TRAIN PROJECT**
**FRESNO TO BAKERSFIELD**
CORCORAN BYPASS SUBSECTION
ALIGNMENT C2
GRADE SEPARATION PROFILE
CORCORAN HWY

CONTRACT NO. HSR 06-0003
DRAWING NO. CT2245
SCALE AS SHOWN
SHEET NO. 9 OF 18

04/02/2014 - RFP No.: HSR 13-57

joshua.thomas 12/27/2013 4:18:29 PM c:\pwworking\hmm\external\joshua.thomas-arup.com\d0124168\VFB-CT-2245-C2.dgn

NOTES:

1. REFER TO DRAWING CT1244 FOR LAYOUT

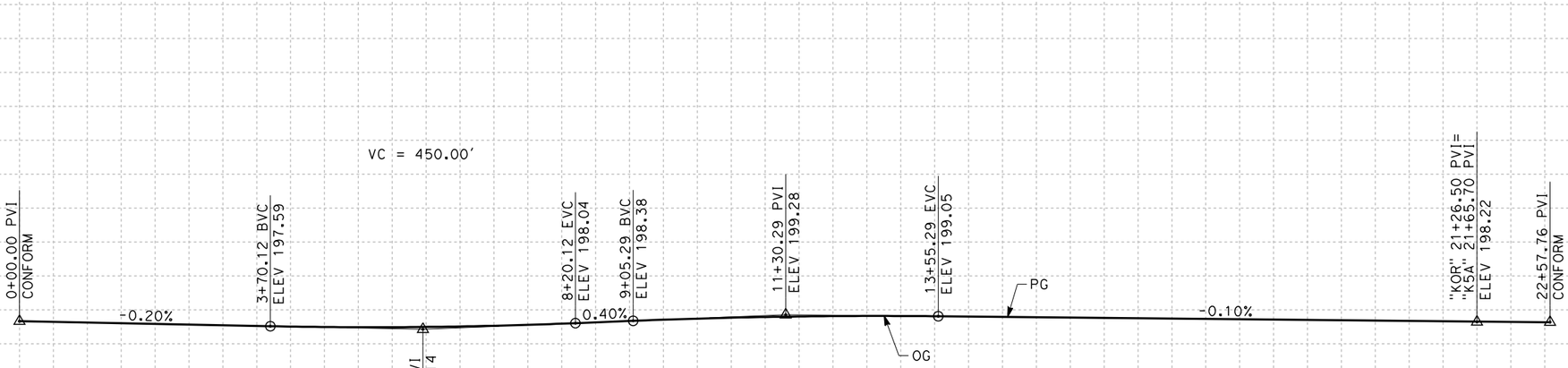


**PROFILE**
"K5A" LINE
SCALE: HORIZ 1"=100'
VERT 1"=10'

| STATION | 0 | 1 | 2 | 3 | 4 | 5 | 6 | 7 | 8 | 9 | 10 | 1 | 2 | 3 | 4 | 15 | 6 | 7 | 8 | 9 | 20 | 1 | 2 | 3 | TOTAL |
|---|---|---|---|---|---|---|---|---|---|---|---|---|---|---|---|---|---|---|---|---|---|---|---|---|---|
| CY Exc | | | | | | | | | | | | | | | | | | | | | | | | | |
| CY Emb | | | | | | | | | | | | | | | | | | | | | | | | | |

| REV | DATE | BY | CHK | APP | DESCRIPTION |
|---|---|---|---|---|---|

DESIGNED BY A. POLING
DRAWN BY E. SUDHAUSEN
CHECKED BY S. BROWN
IN CHARGE R. COFFIN
DATE 12/31/13

**RECORD SET 15% DESIGN SUBMISSION - NOT FOR CONSTRUCTION**

URS | HMM | ARUP
CALIFORNIA HIGH-SPEED TRAIN

CALIFORNIA
HIGH-SPEED RAIL AUTHORITY

**CALIFORNIA HIGH-SPEED TRAIN PROJECT**
**FRESNO TO BAKERSFIELD**
CORCORAN BYPASS SUBSECTION
ALIGNMENT C2
GRADE SEPARATION PROFILE
5TH AVE

CONTRACT NO. HSR 06-0003
DRAWING NO. CT2246
SCALE AS SHOWN
SHEET NO. 10 OF 18

04/02/2014 - RFP No.: HSR 13-57

$FILE$ $TIME$ $DATE$ $USER$

NOTES:

1. REFER TO DRAWING CT1244 FOR LAYOUT

## PROFILE

"KOR" LINE
SCALE: HORIZ 1"=100'
VERT 1"=10'

| STATION | | 10 | 1 | 2 | 3 | 4 | 15 | 6 | 7 | 8 | 9 | 20 | 1 | 2 | 3 | TOTAL |
|---|---|---|---|---|---|---|---|---|---|---|---|---|---|---|---|---|
| CY | Exc | | | | | | | | | | | | | | | |
| | Emb | | | | | | | | | | | | | | | |

| REV | DATE | BY | CHK | APP | DESCRIPTION |
|---|---|---|---|---|---|

DESIGNED BY A. POLING
DRAWN BY E. SUDHAUSEN
CHECKED BY S. BROWN
IN CHARGE R. COFFIN
DATE 12/31/13

**RECORD SET 15% DESIGN SUBMISSION - NOT FOR CONSTRUCTION**

URS | HMM | ARUP
CALIFORNIA HIGH-SPEED TRAIN

CALIFORNIA HIGH-SPEED RAIL AUTHORITY

**CALIFORNIA HIGH-SPEED TRAIN PROJECT**
**FRESNO TO BAKERSFIELD**
CORCORAN BYPASS SUBSECTION
ALIGNMENT C2
GRADE SEPARATION PROFILE
ORANGE AVE CONNECTOR

CONTRACT NO. HSR 06-0003
DRAWING NO. CT2247
SCALE AS SHOWN
SHEET NO. 11 OF 18

12/27/2013 4:19:12 PM c:\pwworking\hmm\external\joshua.thomas-arup.com\d0124168\VFB-CT-2247-C2.dgn joshua.thomas
04/02/2014 - RFP No.: HSR 13-57

NOTES:
1. MINIMUM VERTICAL CLEARANCE OVER STATE HIGHWAY IS 16.5' FROM ROAD SURFACE

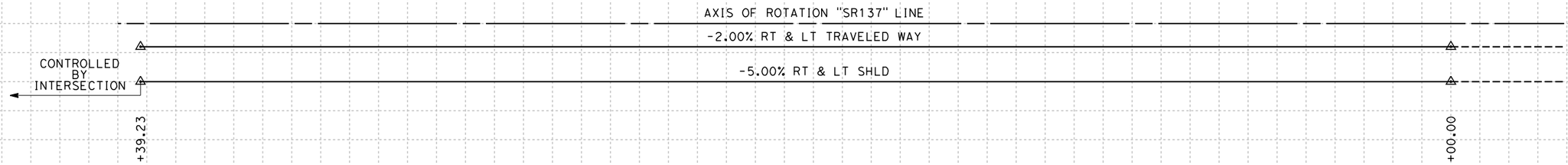


## SUPERELEVATION DIAGRAM




## PROFILE
"SR137" LINE
SCALE: HORIZ 1"=100'
VERT 1"=10'

| STATION | 10 | 1 | 2 | 3 | 4 | 15 | 6 | 7 | 8 | 9 | 20 | 1 | 2 | 3 | 4 | 25 | 6 | 7 | 8 | 9 | 30 | 1 | 2 | 3 | TOTAL |
|---|---|---|---|---|---|---|---|---|---|---|---|---|---|---|---|---|---|---|---|---|---|---|---|---|---|
| CY Exc | | | | | | | | | | | | | | | | | | | | | | | | | |
| CY Emb | | | | | | | | | | | | | | | | | | | | | | | | | |

| REV | DATE | BY | CHK | APP | DESCRIPTION |
|---|---|---|---|---|---|

DESIGNED BY A. POLING
DRAWN BY E. SUDHAUSEN
CHECKED BY S. BROWN
IN CHARGE R. COFFIN
DATE 12/31/13

RECORD SET 15% DESIGN SUBMISSION - NOT FOR CONSTRUCTION

URS | HMM | ARUP
CALIFORNIA HIGH-SPEED TRAIN

CALIFORNIA HIGH-SPEED RAIL AUTHORITY

**CALIFORNIA HIGH-SPEED TRAIN PROJECT**
**FRESNO TO BAKERSFIELD**
CORCORAN BYPASS SUBSECTION
ALIGNMENT C2
GRADE SEP PROFILE & SUPERELEVATION DIAGRAM
WHITLEY AVE/STATE ROUTE 137

CONTRACT NO. HSR 06-0003
DRAWING NO. CT2248
SCALE AS SHOWN
SHEET NO. 12 OF 18

04/02/2014 - RFP No. HSR13-57

joshua.thomas 12/27/2013 4:19:33 PM c:\pwworking\hmm\external\joshua.thomas-arup.com\d0124168\VFB-CT-2248-C2.dgn

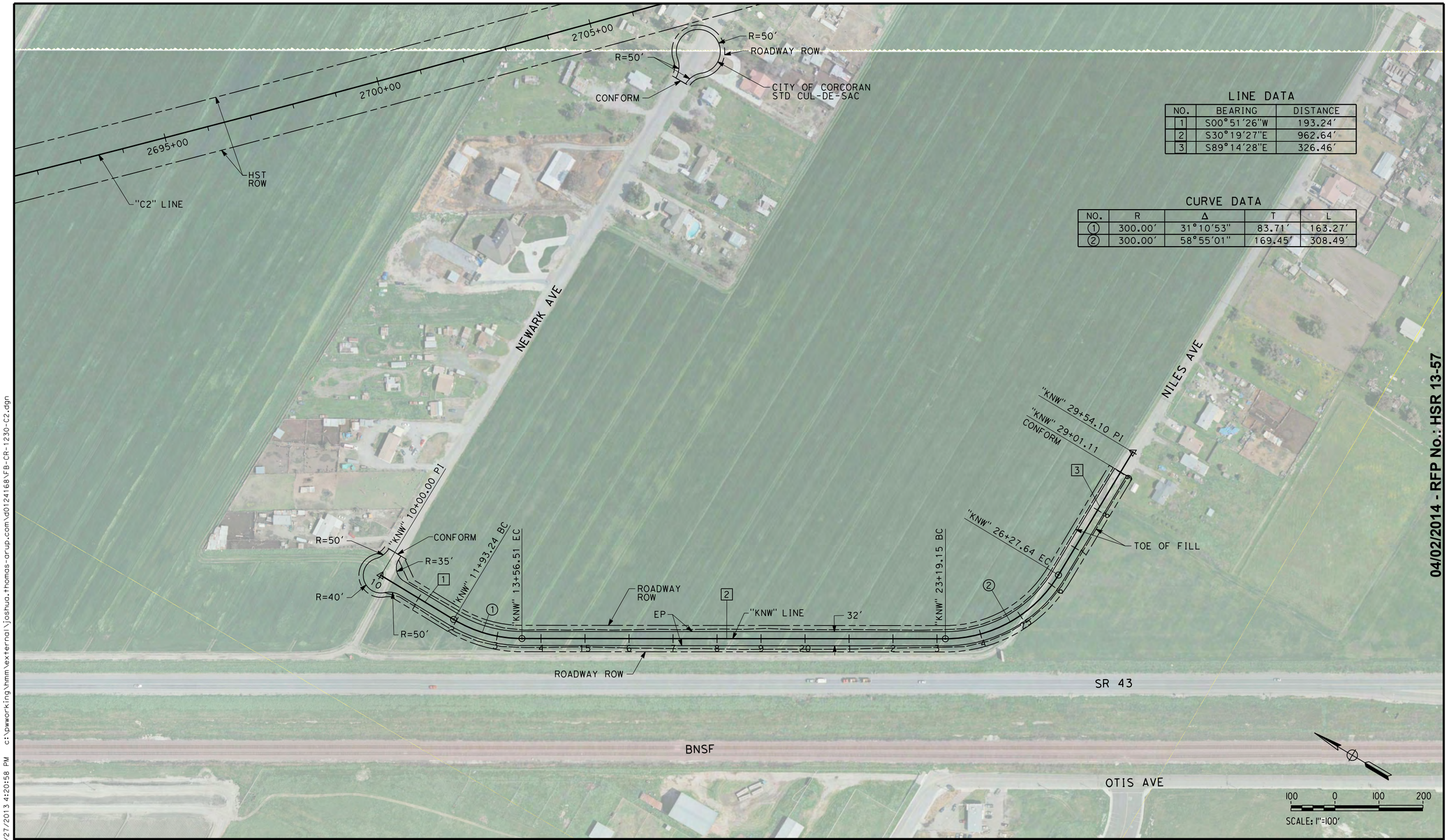


LINE DATA

| NO. | BEARING | DISTANCE |
|---|---|---|
| 1 | S00°51'26"W | 193.24' |
| 2 | S30°19'27"E | 962.64' |
| 3 | S89°14'28"E | 326.46' |

CURVE DATA

| NO. | R | Δ | T | L |
|---|---|---|---|---|
| ① | 300.00' | 31°10'53" | 83.71' | 163.27' |
| ② | 300.00' | 58°55'01" | 169.45' | 308.49' |

04/02/2014 - RFP No.: HSR 13-57

| REV | DATE | BY | CHK | APP | DESCRIPTION |
|---|---|---|---|---|---|

DESIGNED BY A. POLING
DRAWN BY E. SUDHAUSEN
CHECKED BY S. BROWN
IN CHARGE R. COFFIN
DATE 12/31/13

RECORD SET 15% DESIGN SUBMISSION - NOT FOR CONSTRUCTION

URS | HMM | ARUP
CALIFORNIA HIGH-SPEED TRAIN

CALIFORNIA
HIGH-SPEED RAIL AUTHORITY

**CALIFORNIA HIGH-SPEED TRAIN PROJECT**
**FRESNO TO BAKERSFIELD**
CORCORAN BYPASS SUBSECTION
ALIGNMENT C2
ROADWAY LAYOUT
NILES AVE

CONTRACT NO. HSR 06-0003
DRAWING NO. CR1230
SCALE AS SHOWN
SHEET NO. 13 OF 18

joshua.thomas 12/27/2013 4:20:58 PM c:\pwworking\hmm\external\joshua.thomas-arup.com\d0124168\FB-CR-1230-C2.dgn

## LINE DATA

| NO. | BEARING | DISTANCE |
|---|---|---|
| 1 | S00°06'10"E | 186.02' |
| 2 | S47°30'05"E | 733.41' |
| 3 | S89°33'46"E | 215.00' |

## CURVE DATA

| NO. | R | Δ | T | L |
|---|---|---|---|---|
| ① | 425.00' | 47°23'54" | 131.69' | 351.59' |
| ② | 425.00' | 42°03'41" | 115.34' | 312.00' |

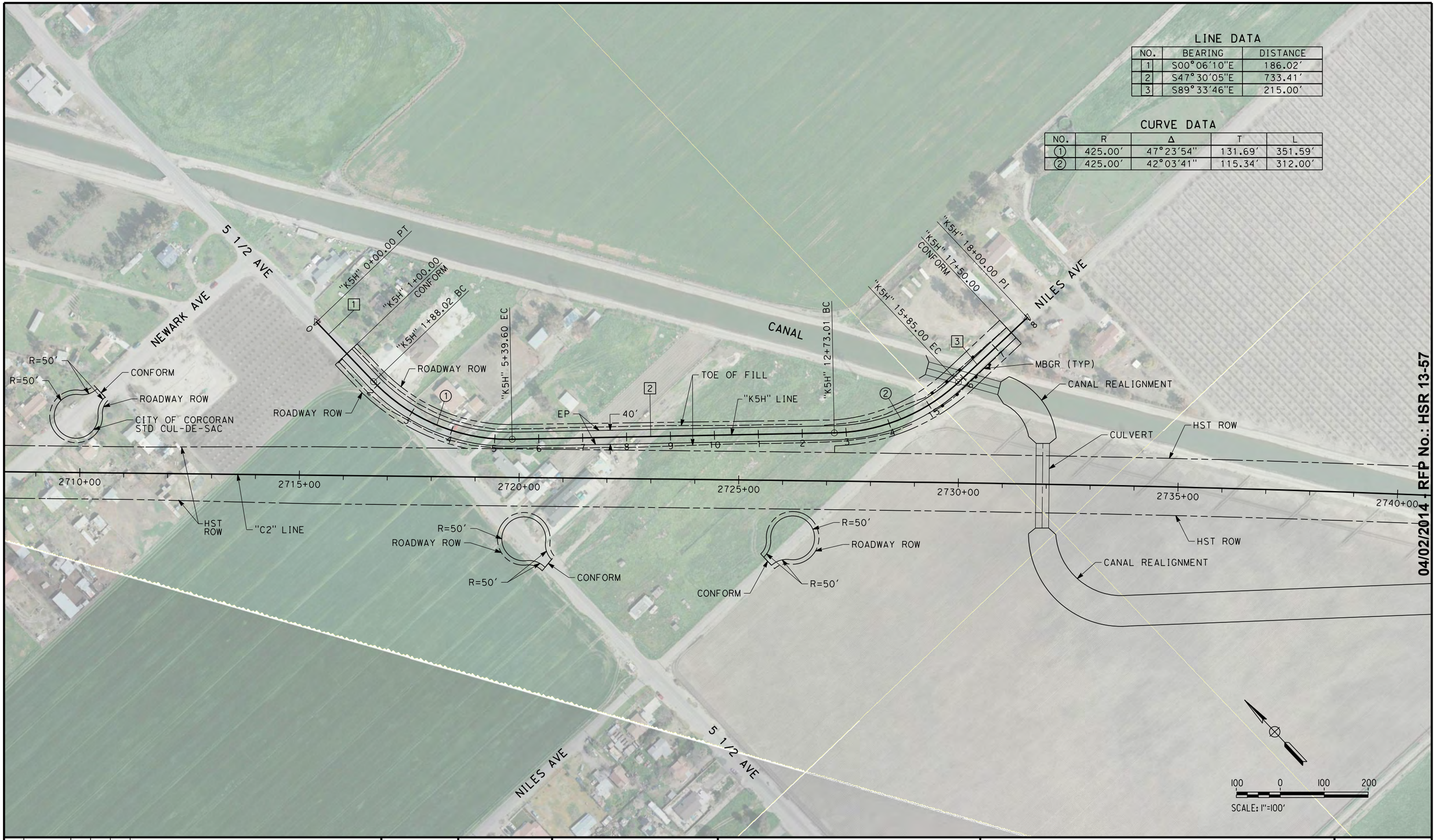


04/02/2014 - RFP No.: HSR 13-57

| REV | DATE | BY | CHK | APP | DESCRIPTION |
|---|---|---|---|---|---|
| | | | | | |

DESIGNED BY A. POLING
DRAWN BY E. SUDHAUSEN
CHECKED BY S. BROWN
IN CHARGE R. COFFIN
DATE 12/31/13

**RECORD SET 15% DESIGN SUBMISSION - NOT FOR CONSTRUCTION**

URS | HMM | ARUP
CALIFORNIA HIGH-SPEED TRAIN

CALIFORNIA
HIGH-SPEED RAIL AUTHORITY

# CALIFORNIA HIGH-SPEED TRAIN PROJECT
## FRESNO TO BAKERSFIELD
CORCORAN BYPASS SUBSECTION
ALIGNMENT C2
ROADWAY LAYOUT
5 1/2 AVE

CONTRACT NO. HSR 06-0003
DRAWING NO. CR1231
SCALE AS SHOWN
SHEET NO. 14 OF 18

$USER$ $DATE$ $TIME$ $FILE$

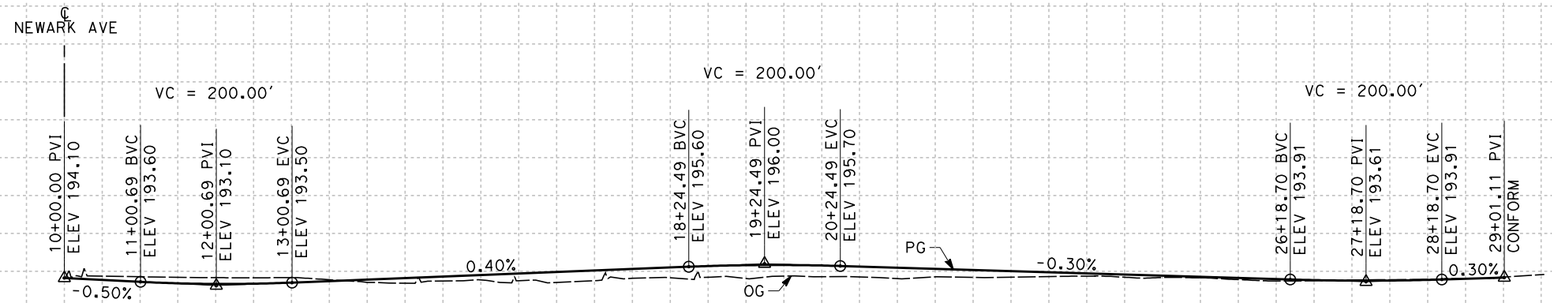


## PROFILE

"KNW" LINE
SCALE: HORIZ 1"=100'
VERT 1"=10'

| STATION | 10 | 1 | 2 | 3 | 4 | 15 | 6 | 7 | 8 | 9 | 20 | 1 | 2 | 3 | 4 | 25 | 6 | 7 | 8 | 9 | 30 | TOTAL |
|---|---|---|---|---|---|---|---|---|---|---|---|---|---|---|---|---|---|---|---|---|---|---|
| CY Exc | | | | | | | | | | | | | | | | | | | | | | |
| CY Emb | | | | | | | | | | | | | | | | | | | | | | |

| REV | DATE | BY | CHK | APP | DESCRIPTION |
|---|---|---|---|---|---|

DESIGNED BY A. POLING
DRAWN BY E. SUDHAUSEN
CHECKED BY S. BROWN
IN CHARGE R. COFFIN
DATE 12/31/13

**RECORD SET 15% DESIGN SUBMISSION - NOT FOR CONSTRUCTION**

URS | HMM | ARUP
CALIFORNIA HIGH-SPEED TRAIN

CALIFORNIA HIGH-SPEED RAIL AUTHORITY

**CALIFORNIA HIGH-SPEED TRAIN PROJECT**
**FRESNO TO BAKERSFIELD**
CORCORAN BYPASS SUBSECTION
ALIGNMENT C2
ROADWAY PROFILE
NILES AVE

CONTRACT NO. HSR 06-0003
DRAWING NO. CR2230
SCALE AS SHOWN
SHEET NO. 15 OF 18

04/02/2014 - RFP No.: HSR 13-57

joshua.thomas 12/27/2013 4:22:23 PM c:\pwworking\hmm\external\joshua.thomas-arup.com\d0124168\VFB-CR-2230-C2.dgn

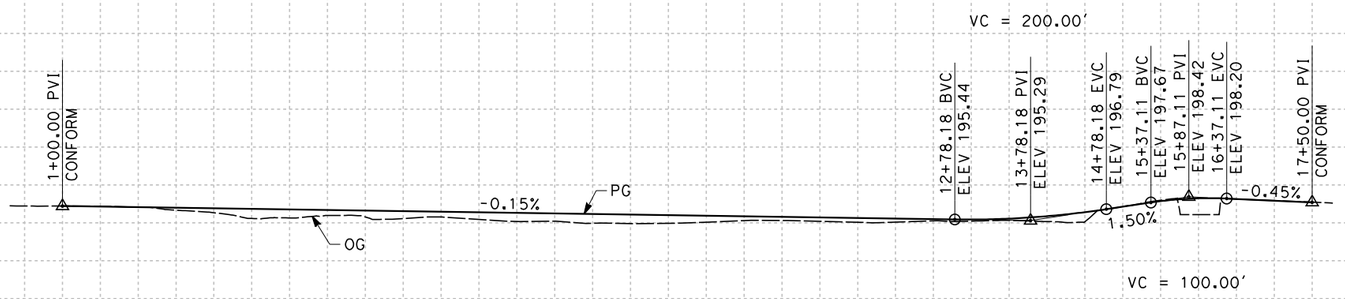


## PROFILE

"K5H" LINE
SCALE: HORIZ 1"=100'
VERT 1"=10'

| STATION | 1 | 2 | 3 | 4 | 5 | 6 | 7 | 8 | 9 | 10 | 1 | 2 | 3 | 4 | 15 | 6 | 7 | 8 | TOTAL |
|---|---|---|---|---|---|---|---|---|---|---|---|---|---|---|---|---|---|---|---|
| CY Exc | | | | | | | | | | | | | | | | | | | |
| CY Emb | | | | | | | | | | | | | | | | | | | |

| REV | DATE | BY | CHK | APP | DESCRIPTION |
|---|---|---|---|---|---|

DESIGNED BY A. POLING
DRAWN BY E. SUDHAUSEN
CHECKED BY S. BROWN
IN CHARGE R. COFFIN
DATE 12/31/13

**RECORD SET 15% DESIGN SUBMISSION - NOT FOR CONSTRUCTION**

URS | HMM | ARUP
CALIFORNIA HIGH-SPEED TRAIN

CALIFORNIA
HIGH-SPEED RAIL AUTHORITY

**CALIFORNIA HIGH-SPEED TRAIN PROJECT**
**FRESNO TO BAKERSFIELD**
CORCORAN BYPASS SUBSECTION
ALIGNMENT C2
ROADWAY PROFILE
5 1/2 AVE

CONTRACT NO. HSR 06-0003
DRAWING NO. CR2231
SCALE AS SHOWN
SHEET NO. 16 OF 18

04/02/2014 - RFP No.: HSR 13-57

joshua.thomas 12/27/2013 4:22:45 PM c:\pwworking\hmm\external\joshua.thomas-arup.com\d0124168\VFB-CR-2231-C2.dgn

NOTES:

1. SUPERELEVATION AS SHOWN OR AS DIRECTED BY THE ENGINEER.
2. PAVEMENT SECTIONS ARE SHOWN FOR INFORMATIONAL PURPOSES ONLY. EXACT DIMENSIONS AND MATERIAL OF THE PAVEMENT SECTION TO BE CONFIRMED.

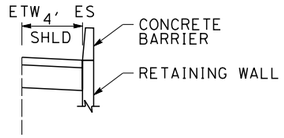


## STRUCTURAL SECTIONS

### TYPICAL ROADWAY

1 — 0.30' HMA (TYPE A)
1.40' CL 2 AB

2 — 0.50' HMA (TYPE A)
1.50' CL 2 AB

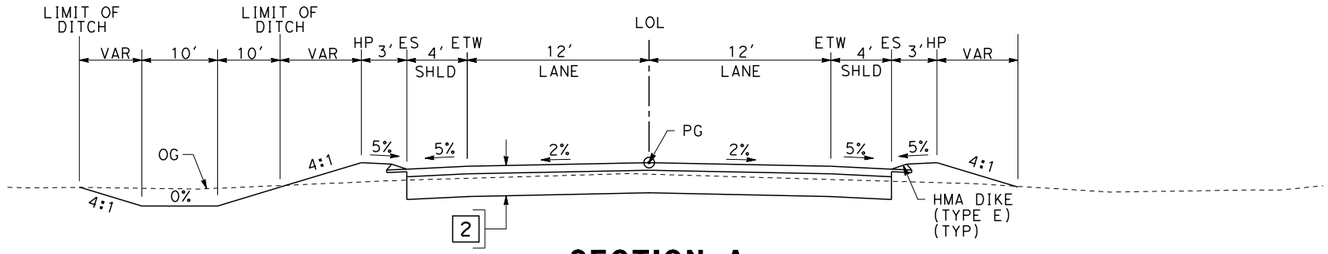


**SECTION A**

"KNE" 4+50.00 TO 15+89.22
"KNE" 22+82.22 TO 37+00.00

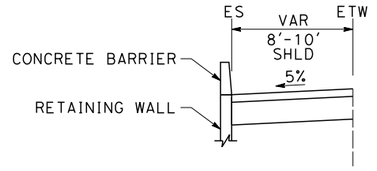


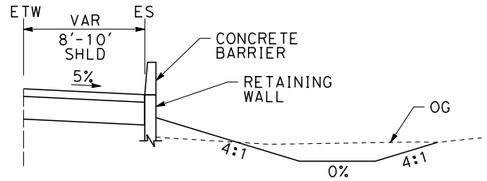


### TABLE OF DESIGN SPEEDS

| STREET NAME | ALIGNMENT DESIGNATION | DESIGN SPEED (MPH) | CRITERIA/JURISDICTION |
|---|---|---|---|
| NEVADA AVE | KNE | 50 | KINGS CO/KINGS CO |
| NEVADA AVE CONNECTOR | KNEC | 25 | KINGS CO/KINGS CO |
| CORCORAN HIGHWAY | KWA | 45 | HDM/CITY OF CORCORAN |
| 5TH AVE / ORANGE AVE | K5A | 35 | HDM/CITY OF CORCORAN |
| ORANGE AVE CONNECTOR | KOR | 35 | HDM/CITY OF CORCORAN |
| WHITLEY AVE (STATE ROUTE 137) | SR137 | 55 | HDM/CALTRANS |
| NILE AVE | KNW | 25 | HDM/CITY OF CORCORAN |
| 5 1/2 AVE | K5H | 25 | HDM/CITY OF CORCORAN |

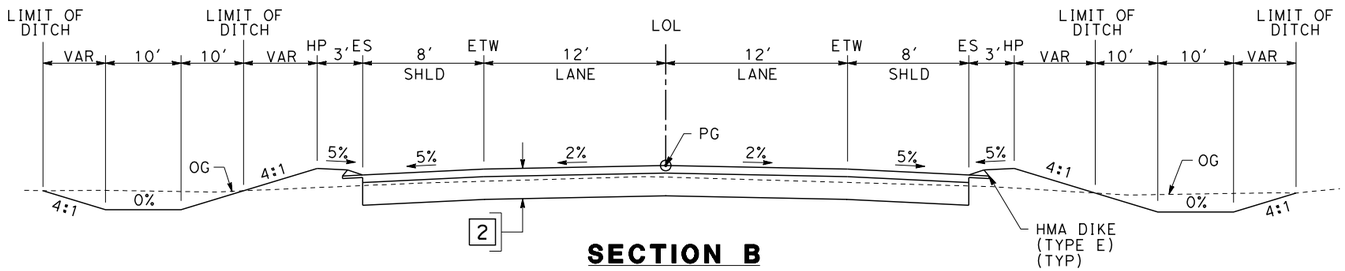


**SECTION B**

"KWA" 10+57.54 TO 25+05.00
"KWA" 28+60.00 TO 41+00.00

| REV | DATE | BY | CHK | APP | DESCRIPTION |
|---|---|---|---|---|---|

DESIGNED BY: A. POLING
DRAWN BY: E. SUDHAUSEN
CHECKED BY: S. BROWN
IN CHARGE: R. COFFIN
DATE: 12/31/13

**RECORD SET 15% DESIGN SUBMISSION - NOT FOR CONSTRUCTION**

URS | HMM | ARUP
CALIFORNIA HIGH-SPEED TRAIN

CALIFORNIA
HIGH-SPEED RAIL AUTHORITY

**CALIFORNIA HIGH-SPEED TRAIN PROJECT**
**FRESNO TO BAKERSFIELD**
CORCORAN BYPASS SUBSECTION
ALIGNMENT C2
ROADWAY / GRADE SEPARATION
TYPICAL CROSS SECTIONS

CONTRACT NO. HSR 06-0003
DRAWING NO. CT3042
SCALE NO SCALE
SHEET NO. 17 OF 18

04/02/2014 - RFP No.: HSR 13-57

$FILE$ $TIME$ $DATE$ $USER$

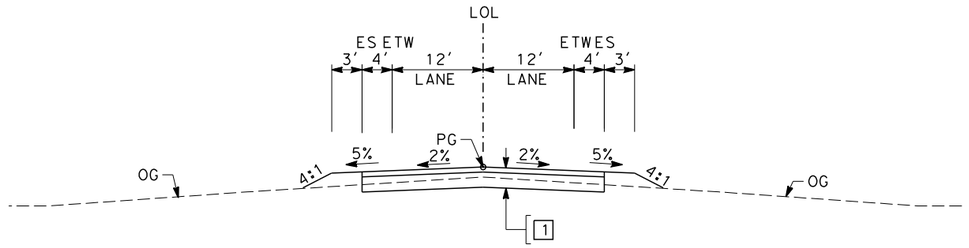


## SECTION C

"KNEC" 0+00.00 TO 18+42.83
"KNW" 10+00.00 TO 29+01.11
"K5H" 1+00.00 TO 17+50.00
"K5A" 0+00.00 TO 22+57.76
"KNE" 2+00.00 TO 4+50.00
"KNE" 37+00.00 TO 39+00.00

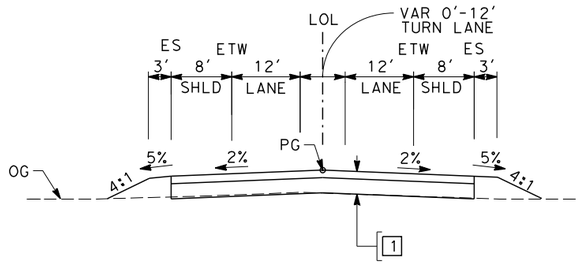


## SECTION D

"KOR" 10+00.00 TO 21+26.50
"KWA" 41+00.00 TO 42+70.81

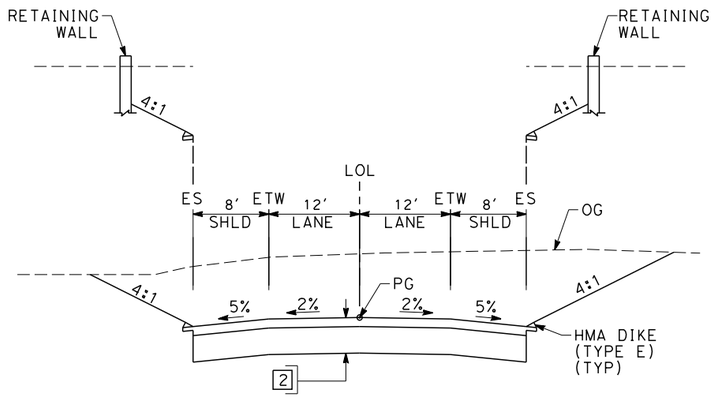


## SECTION E

"SR137" 10+39.23 TO 33+00.00

| REV | DATE | BY | CHK | APP | DESCRIPTION |
|---|---|---|---|---|---|
| | | | | | |

DESIGNED BY: A. POLING
DRAWN BY: E. SUDHAUSEN
CHECKED BY: S. BROWN
IN CHARGE: R. COFFIN
DATE: 12/31/13

**RECORD SET 15% DESIGN SUBMISSION - NOT FOR CONSTRUCTION**

URS | HMM | ARUP
CALIFORNIA HIGH-SPEED TRAIN

CALIFORNIA
HIGH-SPEED RAIL AUTHORITY

# CALIFORNIA HIGH-SPEED TRAIN PROJECT
# FRESNO TO BAKERSFIELD
CORCORAN BYPASS SUBSECTION
ALIGNMENT C2
ROADWAY / GRADE SEPARATION
TYPICAL CROSS SECTIONS

CONTRACT NO.: HSR 06-0003
DRAWING NO.: CT3043
SCALE: NO SCALE
SHEET NO.: 18 OF 18

04/02/2014 - RFP No.: HSR 13-57

$USER$ $DATE$ $TIME$ $FILE$

## STREET CLOSURE

| STREET NAME | HST ALIGNMENT STA | LOCAL STANDARD |
|---|---|---|
| ANGIOLA DRIVE | 3242+50.00 | TULARE COUNTY |

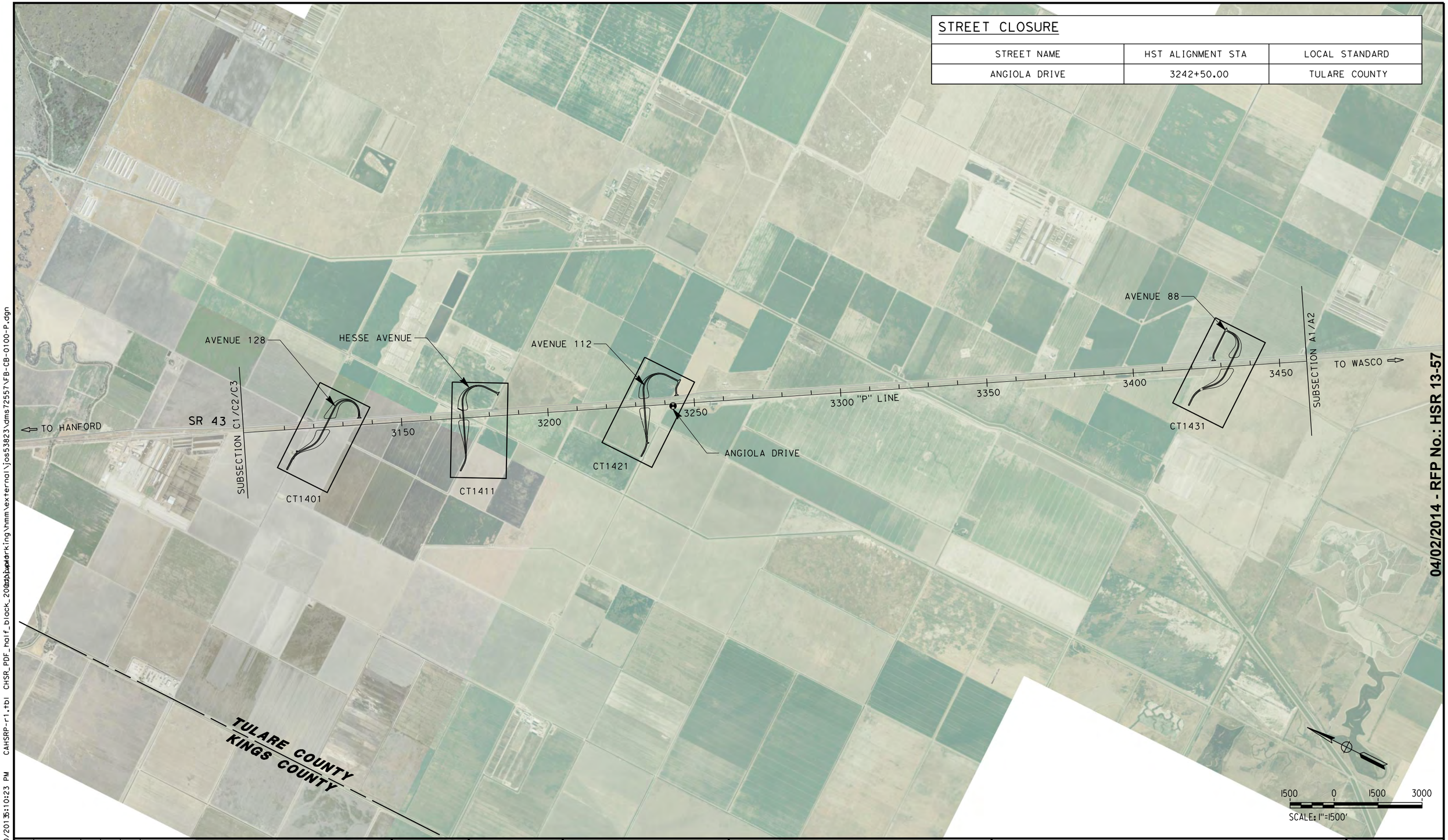


04/02/2014 - RFP No.: HSR 13-57

| REV | DATE | BY | CHK | APP | DESCRIPTION |
|---|---|---|---|---|---|

DESIGNED BY I. JOSIFEK
DRAWN BY V. ORTEGA
CHECKED BY T. CLIFFORD
IN CHARGE R. COFFIN
DATE 12/31/13

**RECORD SET 15% DESIGN SUBMISSION - NOT FOR CONSTRUCTION**

URS | HMM | ARUP
CALIFORNIA HIGH-SPEED TRAIN

CALIFORNIA HIGH-SPEED RAIL AUTHORITY

# CALIFORNIA HIGH-SPEED TRAIN PROJECT
# FRESNO TO BAKERSFIELD
PIXLEY SUBSECTION
ALIGNMENT P
ROADWAY/GRADE SEPARATION
KEY MAP

CONTRACT NO. HSR 06-0003
DRAWING NO. CB0100
SCALE AS SHOWN
SHEET NO. 1 OF 16

12/30/2013 3:10:23 PM CAHSRP-r1.tbl CHSR_PDF_half_block_2008.dwt J:\jos53823\dms72557\FB-CB-0100-P.dgn
J:\jos53823\dms72557\working\hmm\external\jos53823\dms72557\FB-CB-0100-P.dgn
JOS53823

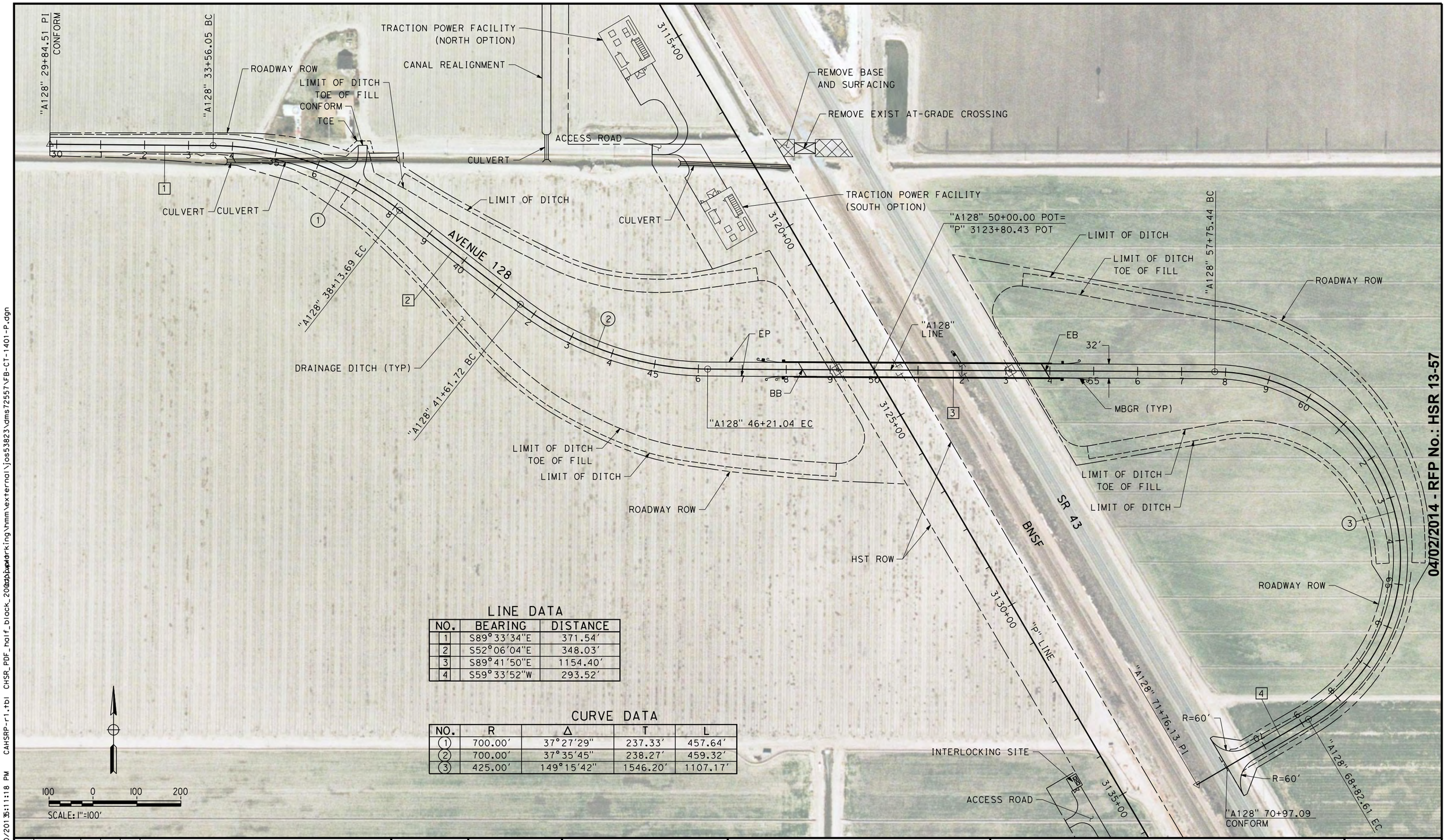


## LINE DATA

| NO. | BEARING | DISTANCE |
|---|---|---|
| 1 | S89°33'34"E | 371.54' |
| 2 | S52°06'04"E | 348.03' |
| 3 | S89°41'50"E | 1154.40' |
| 4 | S59°33'52"W | 293.52' |

## CURVE DATA

| NO. | R | Δ | T | L |
|---|---|---|---|---|
| (1) | 700.00' | 37°27'29" | 237.33' | 457.64' |
| (2) | 700.00' | 37°35'45" | 238.27' | 459.32' |
| (3) | 425.00' | 149°15'42" | 1546.20' | 1107.17' |

100 0 100 200
SCALE: 1"=100'

| REV | DATE | BY | CHK | APP | DESCRIPTION |
|---|---|---|---|---|---|

DESIGNED BY: I .JOSIFEK
DRAWN BY: V. ORTEGA
CHECKED BY: T. CLIFFORD
IN CHARGE: R. COFFIN
DATE: 12/31/13

RECORD SET 15% DESIGN SUBMISSION - NOT FOR CONSTRUCTION

URS | HMM | ARUP
CALIFORNIA HIGH-SPEED TRAIN

CALIFORNIA
HIGH-SPEED RAIL AUTHORITY

# CALIFORNIA HIGH-SPEED TRAIN PROJECT
# FRESNO TO BAKERSFIELD
PIXLEY SUBSECTION
ALIGNMENT P
GRADE SEPARATION LAYOUT
AVE 128

CONTRACT NO. HSR 06-0003
DRAWING NO. CT1401
SCALE AS SHOWN
SHEET NO. 2 OF 16

04/02/2014 - RFP No.: HSR 13-57

J0553823 12/30/2013 3:11:18 PM CAHSRP-r1.tbl CHSR_PDF_half_black_2002.tbl N:\hmm\externa\jos53823\dms72557\FB-CT-1401-P.dgn

"HA" 30+69.18 PI
"HA" 31+54.66
CONFORM
"HA" 34+04.66 BC
"HA" 37+76.37 EC
CANAL REALIGNMENT
HST ROW
ROADWAY ROW
ACCESS ROAD
LIMIT OF DITCH
LIMIT OF DITCH
TOE OF FILL
"HA" 50+00.00 POT=
"P" 3171+12.73 POT
3170+00
MBGR (TYP)
"HA" LINE
HESSE AVENUE
BB
R=60'
CULVERT
DRAINAGE DITCH (TYP)
LIMIT OF DITCH
TOE OF FILL
LIMIT OF DITCH
ROADWAY ROW
CANAL REALIGNMENT
REMOVE BASE AND SURFACING (TYP)
REMOVE EXISTING BRIDGE
3180+00
3185+00
"P" LINE
3175+00
CULVERT
HST ROW
BNSF
SR 43
ROAD 36
RETAINING
WALL NO.1
ROADWAY ROW
LIMIT OF DITCH
LIMIT OF DITCH
TOE OF FILL
EB
32'
EP
"HA" 55+16.18 BC
LIMIT OF DITCH
LIMIT OF DITCH
TOE OF FILL
ROADWAY ROW
REMOVE EXIST
AT-GRADE CROSSING
"HA" 66+72.18 EC
HESSE AVENUE
R=60'
R=60'
"HA" 71+55.12
CONFORM
"HA" 72+69.18 PI
100 0 100 200
SCALE: 1"=100'

## RETAINING WALL DATA

| NO. | LOCATION | | LENGTH | MAX HEIGHT |
|---|---|---|---|---|
| | BEGIN | END | | |
| 1 | 25.58 LT "HA" 52+60.46 | 168.45 LT "HA" 53+40.50 | 164' | 20' |

## LINE DATA

| NO. | BEARING | DISTANCE |
|---|---|---|
| 1 | N90°00'00"E | 335.48' |
| 2 | N59°34'31"E | 1739.81' |
| 3 | S00°00'00"W | 597.01' |

## CURVE DATA

| NO. | R | Δ | T | L |
|---|---|---|---|---|
| (1) | 700.00' | 30°25'29" | 190.35' | 371.71' |
| (2) | 550.00' | 120°25'29" | 960.84' | 1155.99' |

| REV | DATE | BY | CHK | APP | DESCRIPTION |
|---|---|---|---|---|---|

DESIGNED BY I. JOSIFEK
DRAWN BY V. ORTEGA
CHECKED BY T. CLIFFORD
IN CHARGE R. COFFIN
DATE 12/31/13

RECORD SET 15% DESIGN SUBMISSION - NOT FOR CONSTRUCTION

URS | HMM | ARUP
CALIFORNIA HIGH-SPEED TRAIN

CALIFORNIA
HIGH-SPEED RAIL AUTHORITY

# CALIFORNIA HIGH-SPEED TRAIN PROJECT
# FRESNO TO BAKERSFIELD
PIXLEY SUBSECTION
ALIGNMENT P
GRADE SEPARATION LAYOUT
HESSE AVE

CONTRACT NO. HSR 06-0003
DRAWING NO. CT1411
SCALE AS SHOWN
SHEET NO. 3 OF 16

04/02/2014 - RFP No.: HSR 13-57

J0553823 12/30/2013 5:11:57 PM CAHSRP-r1.tbl CHSR_PDF_half_black_2007.tbl J:\jos53823\dms72557\FB-CT-1411-P.dgn

## LINE DATA

| NO. | BEARING | DISTANCE |
|---|---|---|
| 1 | N90°00'00"E | 312.70' |
| 2 | N59°34'31"E | 1657.59' |
| 3 | S00°00'05"W | 501.99' |
| 11 | S89°59'55"E | 287.00' |
| 12 | N55°52'54"E | 240.00' |

## CURVE DATA

| NO. | R | Δ | T | L |
|---|---|---|---|---|
| (1) | 700.00' | 30°25'29" | 190.35' | 371.71' |
| (2) | 550.00' | 120°25'34" | 960.86' | 1156.01' |
| (3) | 290.00' | 89°59'54" | 88.99' | 172.70' |

3225+00
3230+00
3235+00
3240+00
3245+00
CULVERT (EXTEND EXISTING CULVERT)
CANAL REALIGNMENT
LIMIT OF DITCH TOE OF FILL
LIMIT OF DITCH
ROADWAY ROW
EB AVENUE 112
"A112" LINE
BB
MBGR (TYP)
EP
"A112" 50+00.00 POT= "P" 3232+97.60 POT
"A112" 55+16.08 BC
"A112" 66+72.09 EC
"P" LINE
BNSF
SR 43
HST ROW
CULVERT
"A112" 31+74.08 PI
"A112" 32+36.79 CONFORM
"A112" 34+86.79 BC
"A112" 38+58.50 EC
DRAINAGE DITCH (TYP)
R=25'
CONFORM
ROAD 40
RADIO SITE (NORTH OPTION)
ACCESS ROAD
REMOVE BASE AND SURFACING
RADIO SITE (SOUTH OPTION)
ANGIOLA DRIVE
REMOVE EXIST AT-GRADE CROSSING
"A112_C" 12+40.10 BC
"A112_C" 14+12.80 EC
"A112_C" 16+71.14 PI
"A112_C" 17+00.00 PI CONFORM
R=60'
"A112" 71+48.16 POT= "A112_C" 15+95.15 POT
"A112" 71+74.08 PI
"A112_C" 11+00.00 CONFORM
"A112_C" LINE
"A112_C" 10+00.00 PI
100 0 100 200
SCALE: 1"=100'

04/02/2014 - RFP No.: HSR 13-57

$FILE$ $PLTDRVS$ $PENTBLS$ $TIME$ $DATE$ $USER$

| REV | DATE | BY | CHK | APP | DESCRIPTION |
|---|---|---|---|---|---|

DESIGNED BY I. JOSIFEK
DRAWN BY V. ORTEGA
CHECKED BY T. CLIFFORD
IN CHARGE R. COFFIN
DATE 12/31/13

**RECORD SET 15% DESIGN SUBMISSION - NOT FOR CONSTRUCTION**

URS | HMM | ARUP
CALIFORNIA HIGH-SPEED TRAIN

CALIFORNIA HIGH-SPEED RAIL AUTHORITY

# CALIFORNIA HIGH-SPEED TRAIN PROJECT
# FRESNO TO BAKERSFIELD
PIXLEY SUBSECTION
ALIGNMENT P
GRADE SEPARATION LAYOUT
AVE 112

CONTRACT NO. HSR 06-0003
DRAWING NO. CT1421
SCALE AS SHOWN
SHEET NO. 4 OF 16

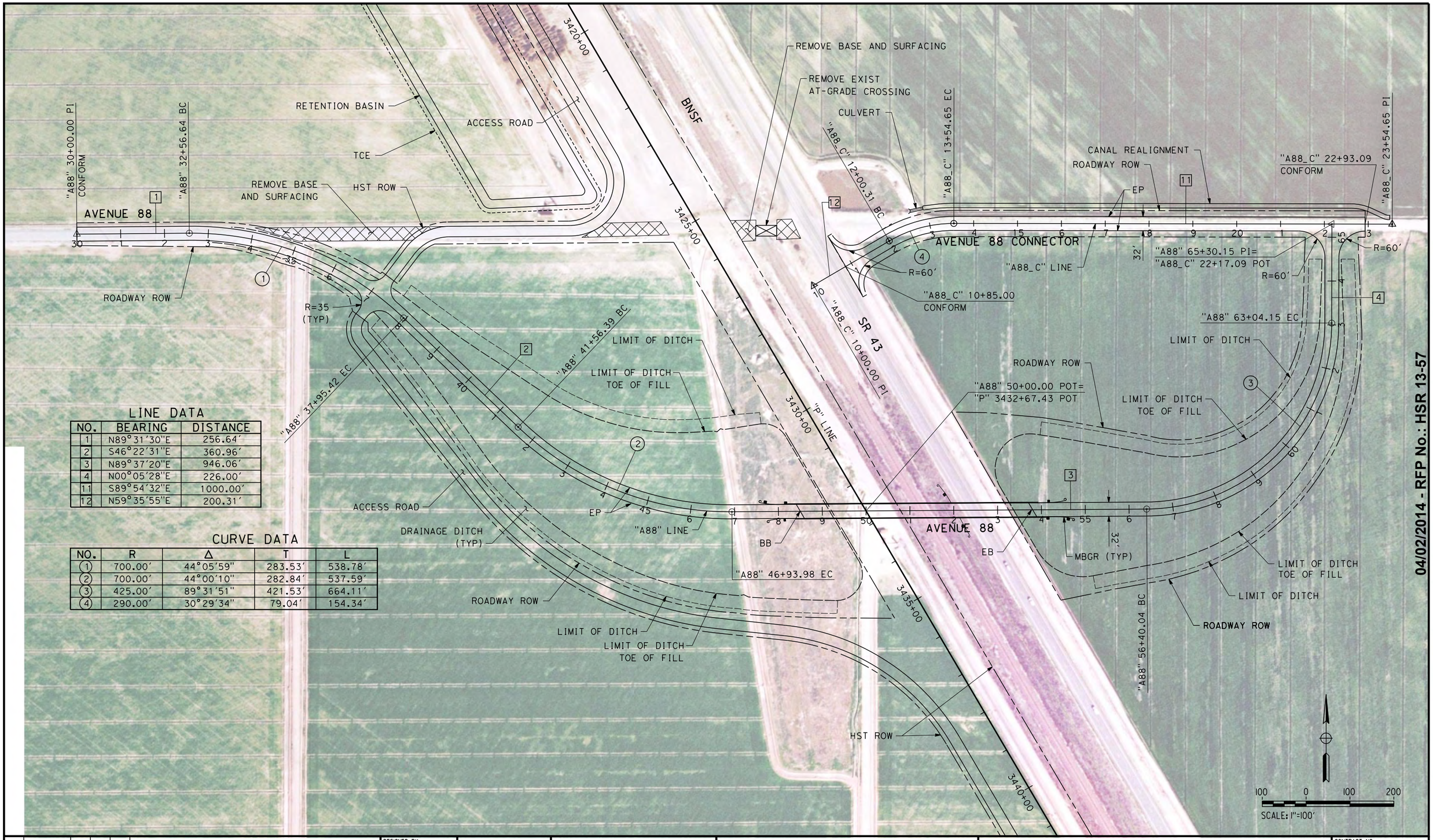


## LINE DATA

| NO. | BEARING | DISTANCE |
|---|---|---|
| 1 | N89°31'30"E | 256.64' |
| 2 | S46°22'31"E | 360.96' |
| 3 | N89°37'20"E | 946.06' |
| 4 | N00°05'28"E | 226.00' |
| 11 | S89°54'32"E | 1000.00' |
| 12 | N59°35'55"E | 200.31' |

## CURVE DATA

| NO. | R | Δ | T | L |
|---|---|---|---|---|
| (1) | 700.00' | 44°05'59" | 283.53' | 538.78' |
| (2) | 700.00' | 44°00'10" | 282.84' | 537.59' |
| (3) | 425.00' | 89°31'51" | 421.53' | 664.11' |
| (4) | 290.00' | 30°29'34" | 79.04' | 154.34' |

$FILE$ $PLTDRVS$ $PENTBLS$ $TIME$ $DATE$ $USER$

| REV | DATE | BY | CHK | APP | DESCRIPTION |
|---|---|---|---|---|---|

DESIGNED BY I. JOSIFEK
DRAWN BY V. ORTEGA
CHECKED BY T. CLIFFORD
IN CHARGE R. COFFIN
DATE 12/31/13

**RECORD SET 15% DESIGN SUBMISSION - NOT FOR CONSTRUCTION**

URS | HMM | ARUP
CALIFORNIA HIGH-SPEED TRAIN

CALIFORNIA
HIGH-SPEED RAIL AUTHORITY

# CALIFORNIA HIGH-SPEED TRAIN PROJECT
# FRESNO TO BAKERSFIELD
PIXLEY SUBSECTION
ALIGNMENT P
GRADE SEPARATION LAYOUT
AVE 88

CONTRACT NO. HSR 06-0003
DRAWING NO. CT1431
SCALE AS SHOWN
SHEET NO. 5 OF 16

04/02/2014 - RFP No.: HSR 13-57

NOTES:
1. MIN VERTICAL CLEARANCE OVER HST IS 27' FROM TOP OF RAIL.
2. MIN VERTICAL CLEARANCE OVER BNSF IS 24' FROM TOP OF RAIL.
3. MIN VERTICAL CLEARANCE OVER SR 43 IS 16.5' FROM ROADWAY SURFACE.

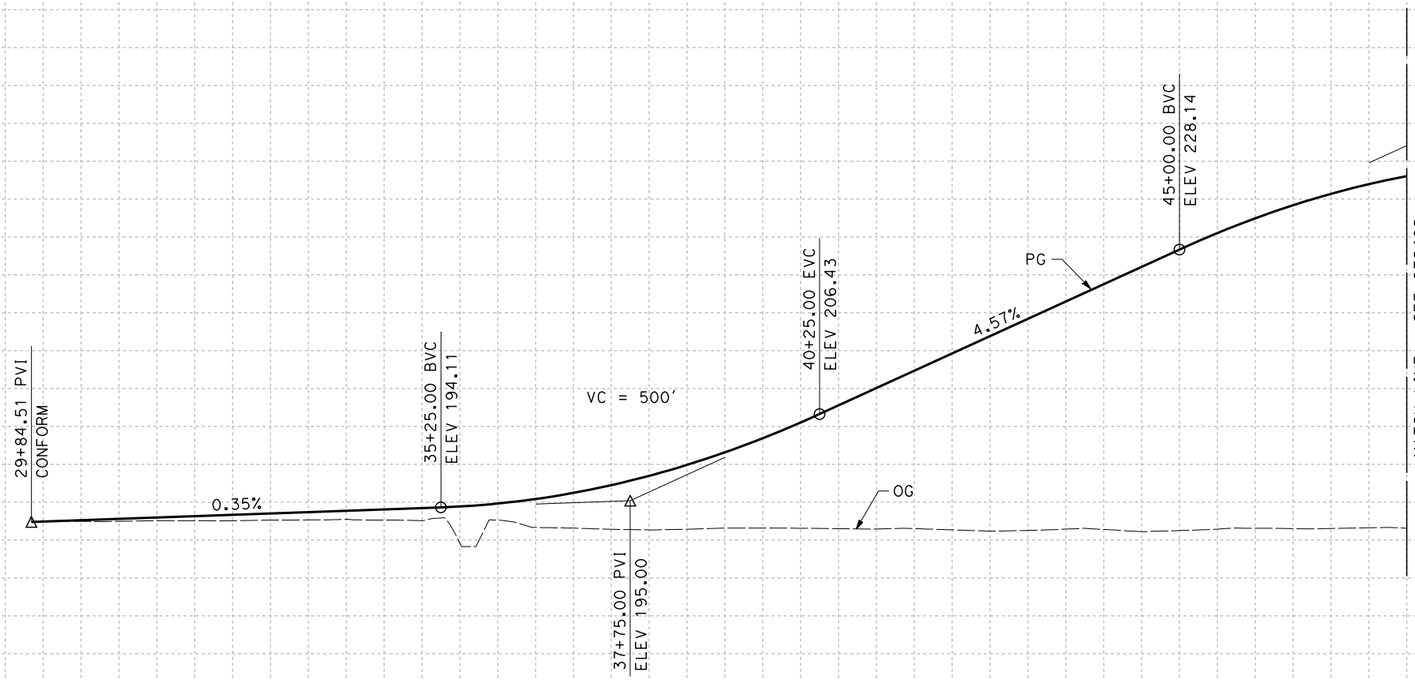


**PROFILE**
"A128" LINE
SCALE: HORIZ 1"=100'
VERT 1"=10'

| STATION | | 7 | 8 | 9 | 30 | 1 | 2 | 3 | 4 | 35 | 6 | 7 | 8 | 9 | 40 | 1 | 2 | 3 | 4 | 45 | 6 | 7 | 8 | TOTAL |
|---|---|---|---|---|---|---|---|---|---|---|---|---|---|---|---|---|---|---|---|---|---|---|---|---|
| CY | Exc | | | | | | | | | | | | | | | | | | | | | | | |
| | Emb | | | | | | | | | | | | | | | | | | | | | | | |

| REV | DATE | BY | CHK | APP | DESCRIPTION |
|---|---|---|---|---|---|

DESIGNED BY I. JOSIFEK
DRAWN BY V. ORTEGA
CHECKED BY T. CLIFFORD
IN CHARGE R. COFFIN
DATE 12/31/13

**RECORD SET 15% DESIGN SUBMISSION - NOT FOR CONSTRUCTION**

URS | HMM | ARUP
CALIFORNIA HIGH-SPEED TRAIN

CALIFORNIA HIGH-SPEED RAIL AUTHORITY

**CALIFORNIA HIGH-SPEED TRAIN PROJECT**
**FRESNO TO BAKERSFIELD**
PIXLEY SUBSECTION
ALIGNMENT P
GRADE SEPARATION PROFILE
AVE 128

CONTRACT NO. HSR 06-0003
DRAWING NO. CT2401
SCALE AS SHOWN
SHEET NO. 6 OF 16

Pkg No.: HSR 13-57 RFP 04/02/2014

12/30/2013 3:12:57 PM CAHSRP-r1.tbl CHSR_PDF_half_black_2007.pwdrkng \\hmm\external\jos53823\dms72557\FB-CT-2401-P.dgn JOS53823

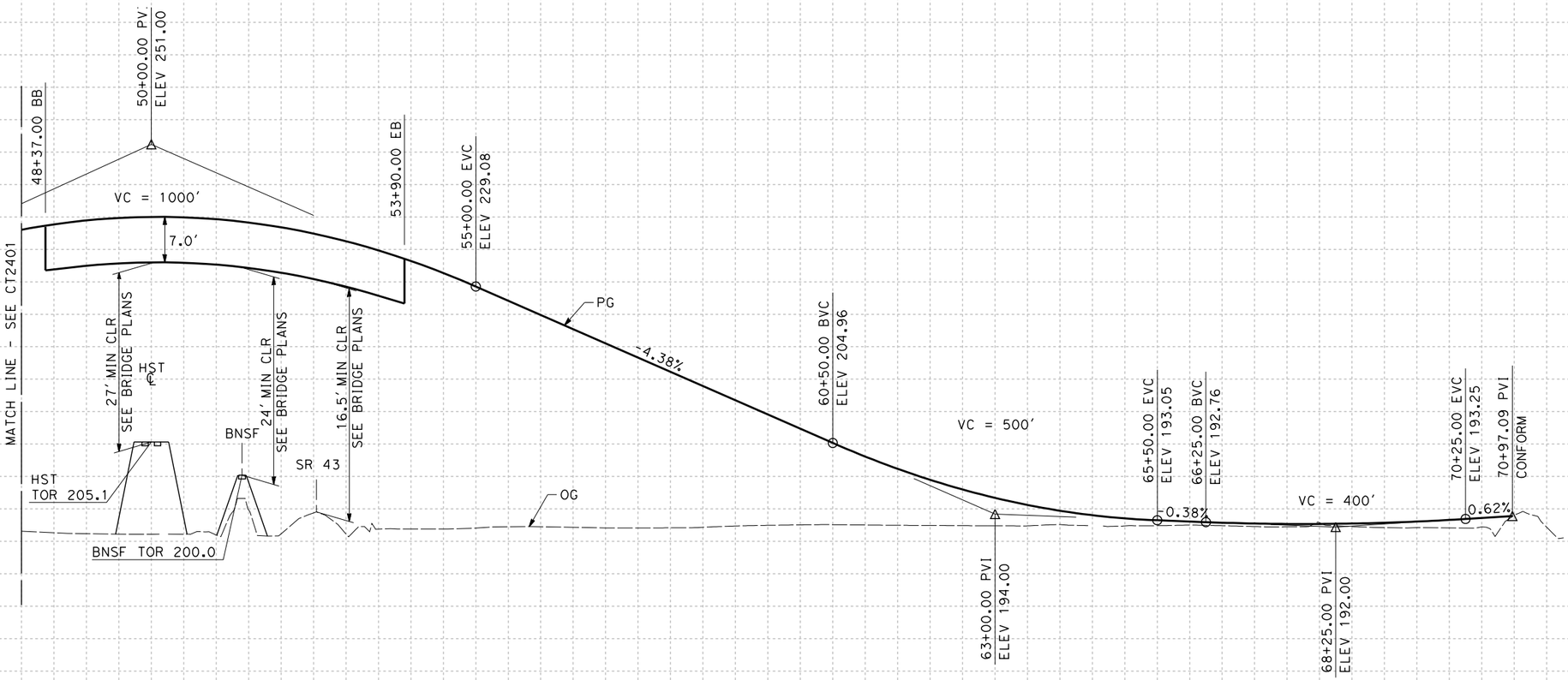


**PROFILE**
"A128" LINE
SCALE: HORIZ 1"=100'
VERT 1"=10'

| STATION | 8 | 9 | 50 | 1 | 2 | 3 | 4 | 55 | 6 | 7 | 8 | 9 | 60 | 1 | 2 | 3 | 4 | 65 | 6 | 7 | 8 | 9 | 70 | 1 | 2 | TOTAL |
|---|---|---|---|---|---|---|---|---|---|---|---|---|---|---|---|---|---|---|---|---|---|---|---|---|---|---|
| CY Exc | | | | | | | | | | | | | | | | | | | | | | | | | | |
| CY Emb | | | | | | | | | | | | | | | | | | | | | | | | | | |

| REV | DATE | BY | CHK | APP | DESCRIPTION |
|---|---|---|---|---|---|

DESIGNED BY I. JOSIFEK
DRAWN BY V. ORTEGA
CHECKED BY T. CLIFFORD
IN CHARGE R. COFFIN
DATE 12/31/13

**RECORD SET 15% DESIGN SUBMISSION - NOT FOR CONSTRUCTION**

URS | HMM | ARUP
CALIFORNIA HIGH-SPEED TRAIN

CALIFORNIA HIGH-SPEED RAIL AUTHORITY

**CALIFORNIA HIGH-SPEED TRAIN PROJECT**
**FRESNO TO BAKERSFIELD**
PIXLEY SUBSECTION
ALIGNMENT P
GRADE SEPARATION PROFILE
AVE 128

CONTRACT NO. HSR 06-0003
DRAWING NO. CT2402
SCALE AS SHOWN
SHEET NO. 7 OF 16

RFP No.: HSR 13-57
04/02/2014

12/30/2013 5:13:10 PM
J:\jos53823\dms72557\FB-CT-2402-P.dgn
CAHSRP-r1.tbl CHSR_PDF_half_block_2002.dgn
J:\jos53823\dms72557\working\hmm\external\jos53823
JOS53823

NOTES:
1. MIN VERTICAL CLEARANCE OVER HST IS 27' FROM TOP OF RAIL.
2. MIN VERTICAL CLEARANCE OVER BNSF IS 24' FROM TOP OF RAIL.
3. MIN VERTICAL CLEARANCE OVER SR 43 IS 16.5' FROM ROADWAY SURFACE.

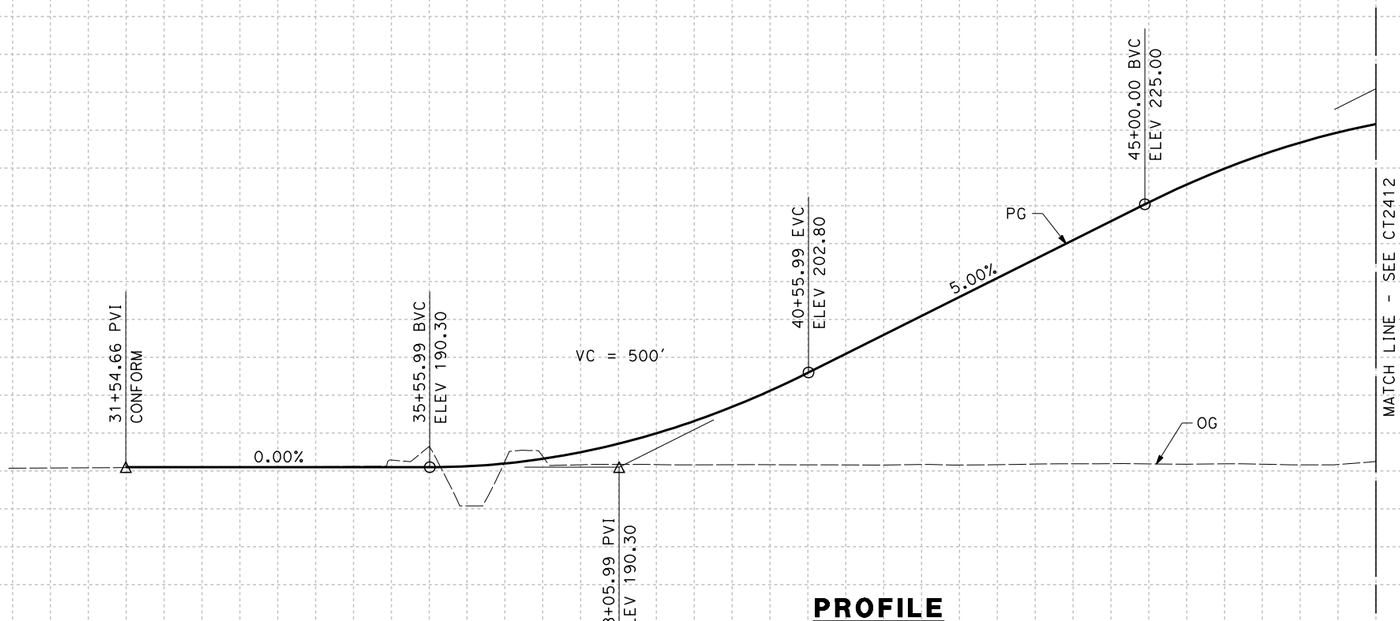


**PROFILE**
"HA" LINE
SCALE: HORIZ 1"=100'
VERT 1"=10'

| STATION | 30 | 1 | 2 | 3 | 4 | 35 | 6 | 7 | 8 | 9 | 40 | 1 | 2 | 3 | 4 | 45 | 6 | 7 | 8 | TOTAL |
|---|---|---|---|---|---|---|---|---|---|---|---|---|---|---|---|---|---|---|---|---|
| CY Exc | | | | | | | | | | | | | | | | | | | | |
| CY Emb | | | | | | | | | | | | | | | | | | | | |

| REV | DATE | BY | CHK | APP | DESCRIPTION |
|---|---|---|---|---|---|

DESIGNED BY I. JOSIFEK
DRAWN BY V. ORTEGA
CHECKED BY T. CLIFFORD
IN CHARGE R. COFFIN
DATE 12/31/13

**RECORD SET 15% DESIGN SUBMISSION - NOT FOR CONSTRUCTION**

URS | HMM | ARUP
CALIFORNIA HIGH-SPEED TRAIN

CALIFORNIA HIGH-SPEED RAIL AUTHORITY

**CALIFORNIA HIGH-SPEED TRAIN PROJECT**
**FRESNO TO BAKERSFIELD**
PIXLEY SUBSECTION
ALIGNMENT P
GRADE SEPARATION PROFILE
HESSE AVE

CONTRACT NO. HSR 06-0003
DRAWING NO. CT2411
SCALE AS SHOWN
SHEET NO. 8 OF 16

**04/02/2014 - RFP No: HSR13-57**

12/30/2013 5:13:23 PM CAHSRP-r1.tbl CHSR_PDF_half_black_2002.tbl J:\projects\hmm\working\hmm\external\jos53823\dms72557\FB-CT-2411-P.dgn
JOS53823

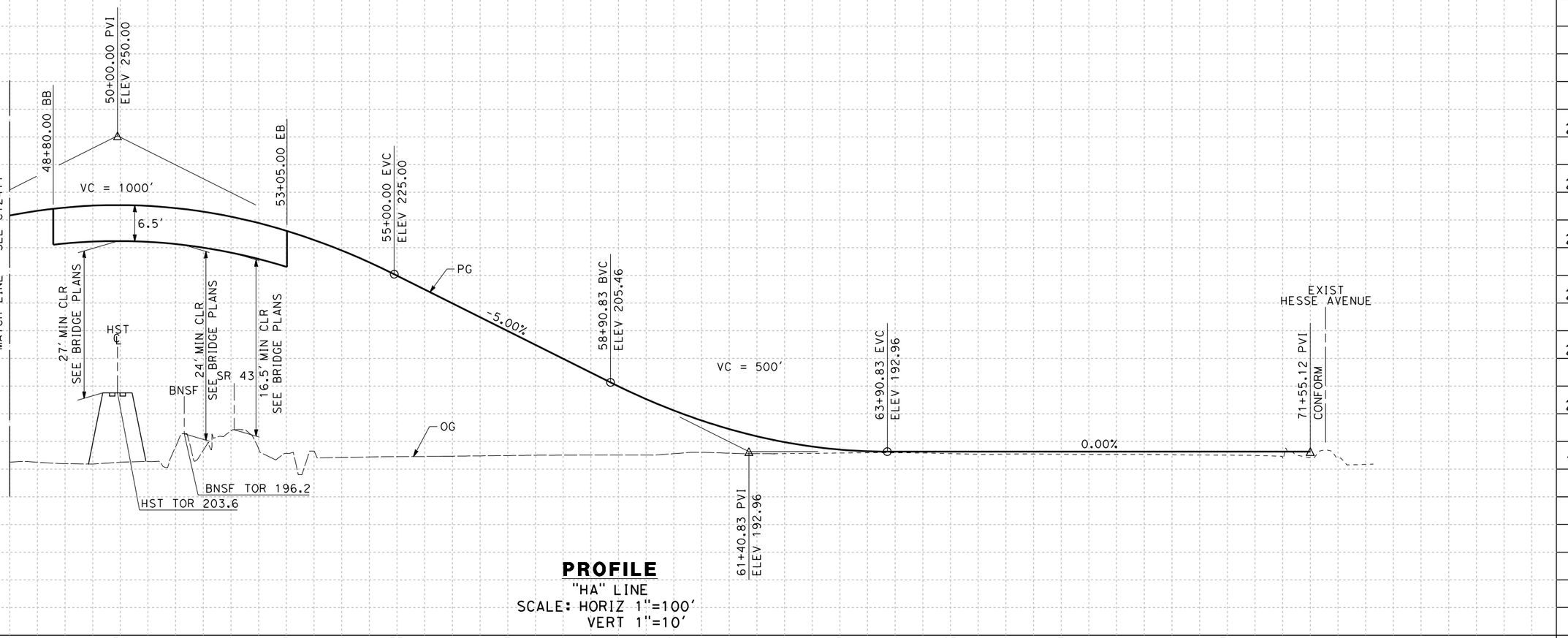


**PROFILE**
"HA" LINE
SCALE: HORIZ 1"=100'
VERT 1"=10'

| STATION | | 8 | 9 | 50 | 1 | 2 | 3 | 4 | 55 | 6 | 7 | 8 | 9 | 60 | 1 | 2 | 3 | 4 | 65 | 6 | 7 | 8 | 9 | 70 | 1 | 2 | TOTAL |
|---|---|---|---|---|---|---|---|---|---|---|---|---|---|---|---|---|---|---|---|---|---|---|---|---|---|---|---|
| CY | Exc | | | | | | | | | | | | | | | | | | | | | | | | | | |
| | Emb | | | | | | | | | | | | | | | | | | | | | | | | | | |

| REV | DATE | BY | CHK | APP | DESCRIPTION |
|---|---|---|---|---|---|

DESIGNED BY I. JOSIFEK
DRAWN BY V. ORTEGA
CHECKED BY T. CLIFFORD
IN CHARGE R. COFFIN
DATE 12/31/13

**RECORD SET 15% DESIGN SUBMISSION - NOT FOR CONSTRUCTION**

URS | HMM | ARUP
CALIFORNIA HIGH-SPEED TRAIN

CALIFORNIA
HIGH-SPEED RAIL AUTHORITY

**CALIFORNIA HIGH-SPEED TRAIN PROJECT**
**FRESNO TO BAKERSFIELD**
PIXLEY SUBSECTION
ALIGNMENT P
GRADE SEPARATION PROFILE
HESSE AVE

CONTRACT NO.
DRAWING NO. CT2412
SCALE AS SHOWN
SHEET NO. 9 OF 16

04/02/2014 - RFP No: HSR13-57

JOS53823 12/30/2013 1:13:35 PM CAHSRP-r1.tbl CHSR_PDF_half_black_2008.ctb c:\working\hmm\external\jos53823\dms72557\FB-CT-2412-P.dgn

NOTES:

1. MIN VERTICAL CLEARANCE OVER HST IS 27' FROM TOP OF RAIL.
2. MIN VERTICAL CLEARANCE OVER BNSF IS 24' FROM TOP OF RAIL.
3. MIN VERTICAL CLEARANCE OVER SR 43 IS 16.5' FROM ROADWAY SURFACE.

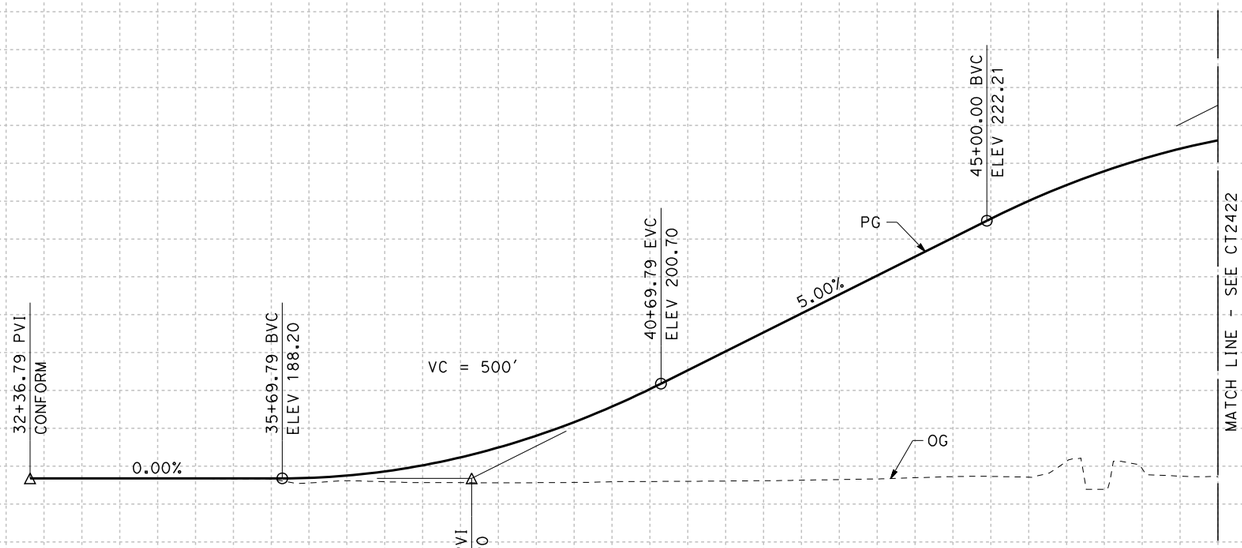


**PROFILE**
"A112" LINE
SCALE: HORIZ 1"=100'
VERT 1"=10'

| STATION | | 30 | 1 | 2 | 3 | 4 | 35 | 6 | 7 | 8 | 9 | 40 | 1 | 2 | 3 | 4 | 45 | 6 | 7 | 8 | TOTAL |
|---|---|---|---|---|---|---|---|---|---|---|---|---|---|---|---|---|---|---|---|---|---|
| CY | Exc | | | | | | | | | | | | | | | | | | | | |
| | Emb | | | | | | | | | | | | | | | | | | | | |

| REV | DATE | BY | CHK | APP | DESCRIPTION |
|---|---|---|---|---|---|

DESIGNED BY I. JOSIFEK
DRAWN BY V. ORTEGA
CHECKED BY T. CLIFFORD
IN CHARGE R. COFFIN
DATE 12/31/13

**RECORD SET 15% DESIGN SUBMISSION - NOT FOR CONSTRUCTION**

URS | HMM | ARUP
CALIFORNIA HIGH-SPEED TRAIN

CALIFORNIA HIGH-SPEED RAIL AUTHORITY

**CALIFORNIA HIGH-SPEED TRAIN PROJECT**
**FRESNO TO BAKERSFIELD**
PIXLEY SUBSECTION
ALIGNMENT P
GRADE SEPARATION PROFILE
AVE 112

CONTRACT NO. HSR 06-0003
DRAWING NO. CT2421
SCALE AS SHOWN
SHEET NO. 10 OF 16

04/02/2014 - RFP No: HSR13-57

12/30/2013 3:13:50 PM CAHSRP-r1.tbl CHSR_PDF_half_black_2002.ctb J:\jos53823\dms72557\FB-CT-2421-P.dgn
J:\jos53823\hmm\working\hmm\external\jos53823\dms72557\FB-CT-2421-P.dgn
J0553823

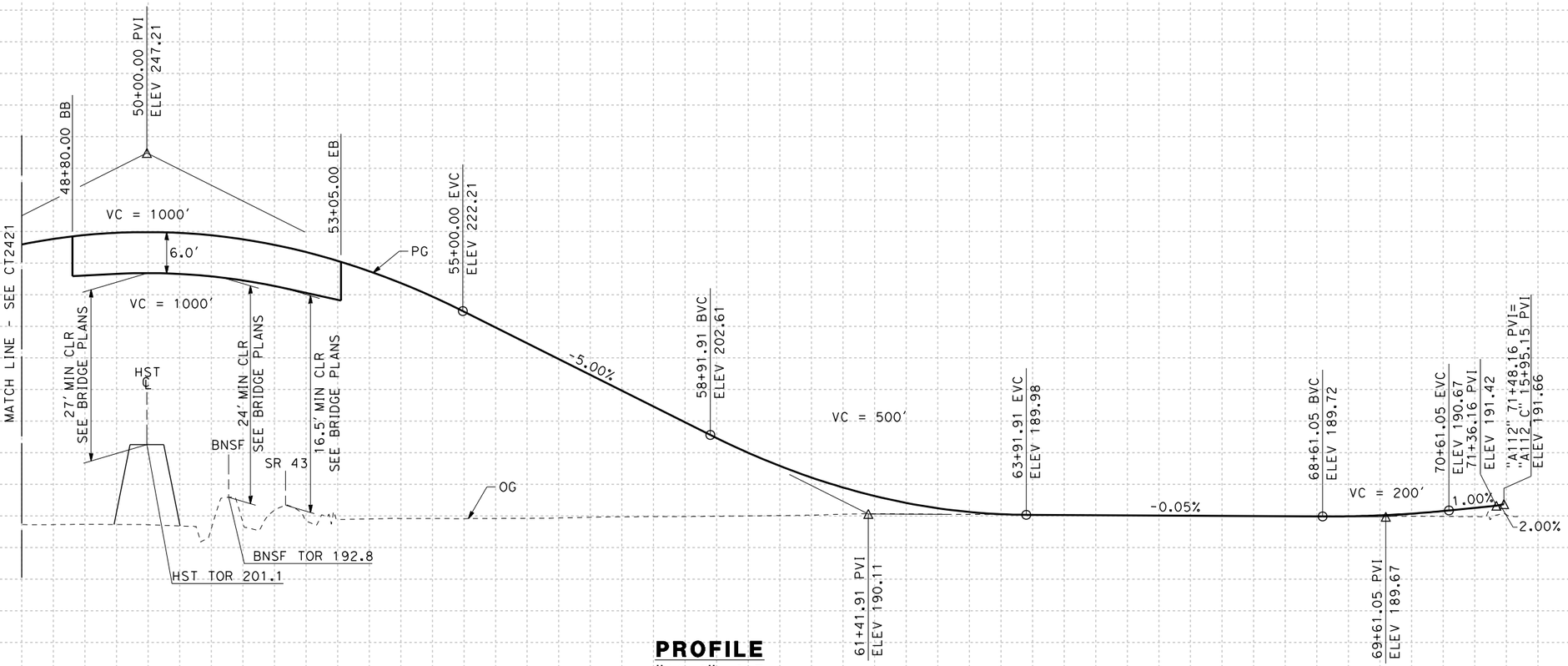


## PROFILE

"A112" LINE

SCALE: HORIZ 1"=100'
VERT 1"=10'

| STATION | 8 | 9 | 50 | 1 | 2 | 3 | 4 | 55 | 6 | 7 | 8 | 9 | 60 | 1 | 2 | 3 | 4 | 65 | 6 | 7 | 8 | 9 | 70 | 1 | 2 | 3 | TOTAL |
|---|---|---|---|---|---|---|---|---|---|---|---|---|---|---|---|---|---|---|---|---|---|---|---|---|---|---|---|
| CY Exc | | | | | | | | | | | | | | | | | | | | | | | | | | | |
| CY Emb | | | | | | | | | | | | | | | | | | | | | | | | | | | |

| REV | DATE | BY | CHK | APP | DESCRIPTION |
|---|---|---|---|---|---|

DESIGNED BY: I. JOSIFEK
DRAWN BY: V. ORTEGA
CHECKED BY: T. CLIFFORD
IN CHARGE: R. COFFIN
DATE: 12/31/13

RECORD SET 15% DESIGN SUBMISSION - NOT FOR CONSTRUCTION

URS | HMM | ARUP
CALIFORNIA HIGH-SPEED TRAIN

CALIFORNIA
HIGH-SPEED RAIL AUTHORITY

**CALIFORNIA HIGH-SPEED TRAIN PROJECT**
**FRESNO TO BAKERSFIELD**
PIXLEY SUBSECTION
ALIGNMENT P
GRADE SEPARATION PROFILE
AVE 112

CONTRACT NO. HSR 06-0003
DRAWING NO. CT2422
SCALE AS SHOWN
SHEET NO. 11 OF 16

RFP No: HSR13-57
04/02/2014

12/30/2013 3:14:03 PM
J0553823
CAHSRP-r1.tbl CHSR_PDF_half_black_2002.pwd
\\external\jos53823\dms72557\FB-CT-2422-P.dgn

NOTES:
1. SEE SHEET CT1421 FOR LAYOUT VIEW

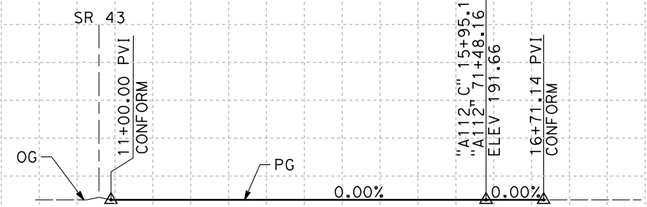


## PROFILE

"A112_C" LINE
SCALE: HORIZ 1"=100'
VERT 1"=10'

| STATION | | 10 | 1 | 2 | 3 | 4 | 15 | 6 | 7 | 8 | TOTAL |
|---|---|---|---|---|---|---|---|---|---|---|---|
| CY | Exc | | | | | | | | | | |
| | Emb | | | | | | | | | | |

| REV | DATE | BY | CHK | APP | DESCRIPTION |
|---|---|---|---|---|---|

DESIGNED BY I. JOSIFEK
DRAWN BY V. ORTEGA
CHECKED BY T. CLIFFORD
IN CHARGE R. COFFIN
DATE 12/31/13

**RECORD SET 15% DESIGN SUBMISSION - NOT FOR CONSTRUCTION**

URS | HMM | ARUP
CALIFORNIA HIGH-SPEED TRAIN

CALIFORNIA HIGH-SPEED RAIL AUTHORITY

**CALIFORNIA HIGH-SPEED TRAIN PROJECT**
**FRESNO TO BAKERSFIELD**
PIXLEY SUBSECTION
ALIGNMENT P
GRADE SEPARATION PROFILE
AVE 112 CONNECTOR

CONTRACT NO. HSR 06-0003
DRAWING NO. CT2423
SCALE AS SHOWN
SHEET NO. 12 OF 16

04/02/2014 - RFP No.: HSR 13-57

12/30/2013 5:14:16 PM CAHSRP-r1.tbl CHSR_PDF_half_block_2008.dgn d:\pwworking\hmm\external\jos53823\dms72557\FB-CT-2423-P.dgn JOS53823

NOTES:

1. MIN VERTICAL CLEARANCE OVER HST IS 27′ FROM TOP OF RAIL.
2. MIN VERTICAL CLEARANCE OVER BNSF IS 24′ FROM TOP OF RAIL.
3. MIN VERTICAL CLEARANCE OVER SR 43 IS 16.5′ FROM ROADWAY SURFACE.

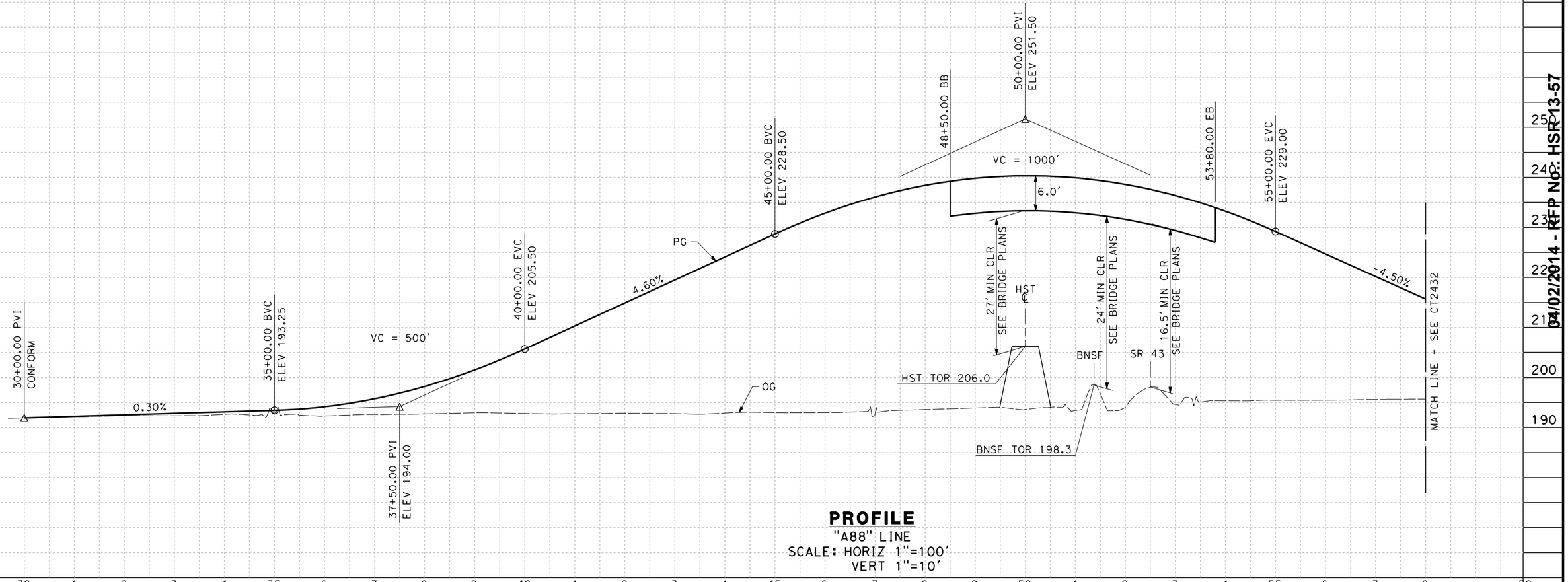


**PROFILE**
"A88" LINE
SCALE: HORIZ 1"=100′
VERT 1"=10′

| STATION | 30 | 1 | 2 | 3 | 4 | 35 | 6 | 7 | 8 | 9 | 40 | 1 | 2 | 3 | 4 | 45 | 6 | 7 | 8 | 9 | 50 | 1 | 2 | 3 | 4 | 55 | 6 | 7 | 8 | 50 | TOTAL |
|---|---|---|---|---|---|---|---|---|---|---|---|---|---|---|---|---|---|---|---|---|---|---|---|---|---|---|---|---|---|---|---|
| CY Exc | | | | | | | | | | | | | | | | | | | | | | | | | | | | | | | |
| CY Emb | | | | | | | | | | | | | | | | | | | | | | | | | | | | | | | |

| REV | DATE | BY | CHK | APP | DESCRIPTION |
|---|---|---|---|---|---|

DESIGNED BY I. JOSIFEK
DRAWN BY V. ORTEGA
CHECKED BY T. CLIFFORD
IN CHARGE R. COFFIN
DATE 12/31/13

**RECORD SET 15% DESIGN SUBMISSION - NOT FOR CONSTRUCTION**

URS | HMM | ARUP
CALIFORNIA HIGH-SPEED TRAIN

CALIFORNIA
HIGH-SPEED RAIL AUTHORITY

# CALIFORNIA HIGH-SPEED TRAIN PROJECT
# FRESNO TO BAKERSFIELD
PIXLEY SUBSECTION
ALIGNMENT P
GRADE SEPARATION PROFILE
AVE 88

CONTRACT NO. HSR 06-0003
DRAWING NO. CT2431
SCALE AS SHOWN
SHEET NO. 13 OF 16

**RFP No: HSR13-57**
**04/02/2014 - RFP No: HSR13-57**

12/30/2013 3:14:28 PM CAHSRP-r1.tbl CHSR_PDF_half_block_2007.dgn d:\pwworking\hmm\external\jos53823\dms72557\FB-CT-2431-P.dgn
JOS53823

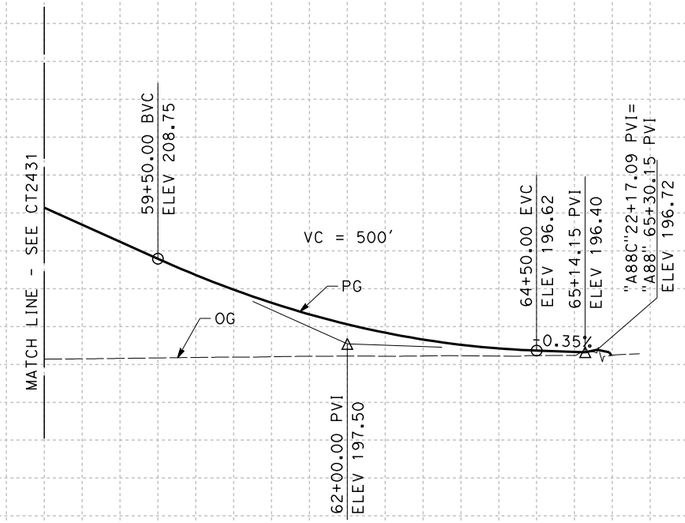


**PROFILE**
"A88" LINE
SCALE: HORIZ 1"=100'
VERT 1"=10'

| STATION | | 8 | 9 | 60 | 1 | 2 | 3 | 4 | 65 | TOTAL |
|---|---|---|---|---|---|---|---|---|---|---|
| CY | Exc | | | | | | | | | |
| | Emb | | | | | | | | | |

| REV | DATE | BY | CHK | APP | DESCRIPTION |
|---|---|---|---|---|---|

DESIGNED BY I. JOSIFEK
DRAWN BY V. ORTEGA
CHECKED BY T. CLIFFORD
IN CHARGE R. COFFIN
DATE 12/31/13

RECORD SET 15% DESIGN SUBMISSION - NOT FOR CONSTRUCTION

URS | HMM | ARUP
CALIFORNIA HIGH-SPEED TRAIN

CALIFORNIA HIGH-SPEED RAIL AUTHORITY

**CALIFORNIA HIGH-SPEED TRAIN PROJECT**
**FRESNO TO BAKERSFIELD**
PIXLEY SUBSECTION
ALIGNMENT P
GRADE SEPARATION PROFILE
AVE 88

CONTRACT NO. HSR 06-0003
DRAWING NO. CT2432
SCALE AS SHOWN
SHEET NO. 14 OF 16

04/02/2014 - RFP NO: HSR13-57

12/30/2013 3:14:41 PM CAHSRP-r1.tbl CHSR_PDF_half_black_2007.ctb c:\projects\working\hmm\external\jos53823\dms72557\FB-CT-2432-P.dgn
JOS53823

NOTES:
1. SEE SHEET CT1431 FOR LAYOUT VIEW

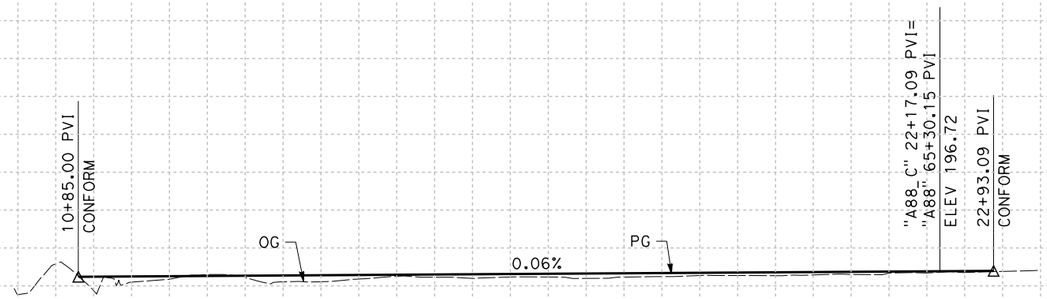


**PROFILE**
"A88_C" LINE
SCALE: HORIZ 1"=100'
VERT 1"=10'

| STATION | 10 | 1 | 2 | 3 | 4 | 15 | 6 | 7 | 8 | 9 | 20 | 1 | 2 | 3 | 4 | 25 | TOTAL |
|---|---|---|---|---|---|---|---|---|---|---|---|---|---|---|---|---|---|
| CY Exc | | | | | | | | | | | | | | | | | |
| CY Emb | | | | | | | | | | | | | | | | | |

| REV | DATE | BY | CHK | APP | DESCRIPTION |
|---|---|---|---|---|---|

DESIGNED BY I. JOSIFEK
DRAWN BY V. ORTEGA
CHECKED BY T. CLIFFORD
IN CHARGE R. COFFIN
DATE 12/31/13

**RECORD SET 15% DESIGN SUBMISSION - NOT FOR CONSTRUCTION**

URS | HMM | ARUP
CALIFORNIA HIGH-SPEED TRAIN

CALIFORNIA HIGH-SPEED RAIL AUTHORITY

**CALIFORNIA HIGH-SPEED TRAIN PROJECT**
**FRESNO TO BAKERSFIELD**
PIXLEY SUBSECTION
ALIGNMENT P
GRADE SEPARATION PROFILE
AVE 88 CONNECTOR

CONTRACT NO. HSR 06-0003
DRAWING NO. CT2433
SCALE AS SHOWN
SHEET NO. 15 OF 16

**04/02/2014 - RFP No.: HSR 13-57**

12/30/2013 5:14:53 PM CAHSRP-r1.tbl CHSR_PDF_half_black_2008.tbl J:\projects\JOS53823\dms72557\FB-CT-2433-P.dgn
JOS53823

NOTES:

1. SUPERELEVATION AS SHOWN OR AS DIRECTED BY THE ENGINEER.
2. PAVEMENT SECTIONS ARE SHOWN FOR INFORMATIONAL PURPOSES ONLY. EXACT DIMENSIONS AND MATERIAL OF THE PAVEMENT SECTION TO BE CONFIRMED.

## STRUCTURAL SECTIONS

### TYPICAL ROADWAY

1 — 0.30' HMA (TYPE A)
1.40' CL 2 AB

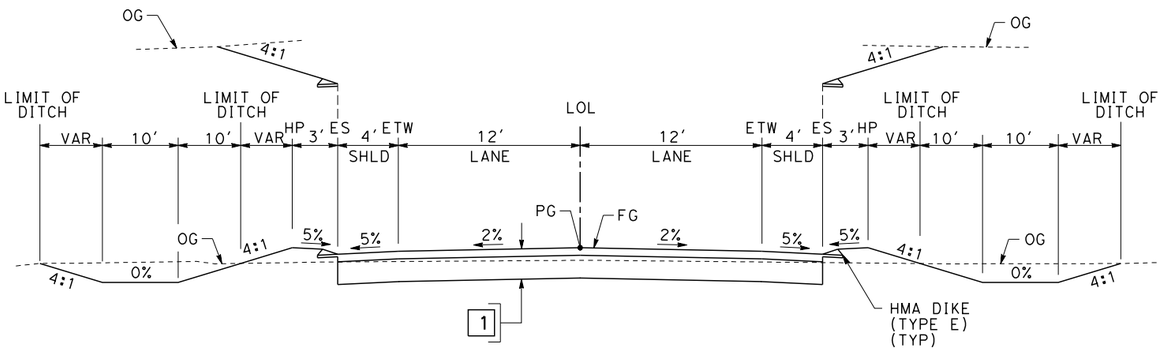


## SECTION A

"A128" 37+00.00 TO 48+37.00
"A128" 53+90.00 TO 64+50.00
"HA" 37+76.00 TO 48+80.00
"HA" 53+05.00 TO 63+60.00
"A112" 37+50.00 TO 48+80.00
"A112" 53+05.00 TO 63+85.00
"A88" 37+55.00 TO 48+50.00
"A88" 53+80.00 TO 64+60.00

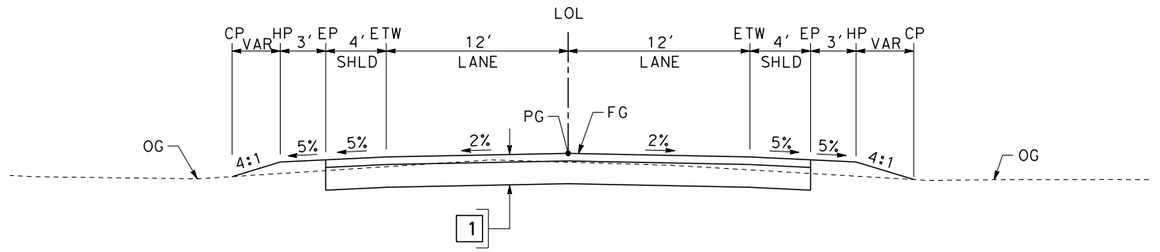


## SECTION B

"A128" 29+84.51 TO 37+00.00
"A128" 64+50.00 TO 71+01.17
"HA" 31+54.66 TO 37+76.00
"HA" 63+60.00 TO 71+55.12
"A112" 32+36.79 TO 37+50.00
"A112" 63+85.00 TO 71+48.16
"A112_C" 11+00.00 TO 16+71.14
"A88" 30+00.00 TO 37+55.00
"A88" 64+60.00 TO 65+30.15
"A88_C" 10+85.00 TO 22+93.09

### TABLE OF DESIGN SPEEDS

| STREET NAME | ALIGNMENT DESIGNATION | DESIGN SPEED | CRITERIA/JURISDICTION |
|---|---|---|---|
| AVE 128 | A128 | 50(40*) | AASHTO/TULARE COUNTY |
| HESSE AVE | HA | 50(45*) | AASHTO/TULARE COUNTY |
| AVE 112 | A112 | 50(45*) | AASHTO/TULARE COUNTY |
| AVE 88 | A88 | 50(40*) | AASHTO/TULARE COUNTY |
| AVE 112 CONNECTOR | A112_C | 40 | AASHTO/TULARE COUNTY |
| AVE 88 CONNECTOR | A88_C | 40 | AASHTO/TULARE COUNTY |

* WILL REQUIRE REDUCED DESIGN SPEED AT HORIZONTAL CURVE PRIOR TO STOP CONDITION

| REV | DATE | BY | CHK | APP | DESCRIPTION |
|---|---|---|---|---|---|
| | | | | | |

DESIGNED BY I. JOSIFEK
DRAWN BY V. ORTEGA
CHECKED BY T. CLIFFORD
IN CHARGE R. COFFIN
DATE 12/31/13

**RECORD SET 15% DESIGN SUBMISSION - NOT FOR CONSTRUCTION**

URS | HMM | ARUP
CALIFORNIA HIGH-SPEED TRAIN

CALIFORNIA HIGH-SPEED RAIL AUTHORITY

**CALIFORNIA HIGH-SPEED TRAIN PROJECT**
**FRESNO TO BAKERSFIELD**
PIXLEY SUBSECTION
ALIGNMENT P
ROADWAY/GRADE SEPARATION
TYPICAL CROSS SECTIONS

CONTRACT NO. HSR 06-0003
DRAWING NO. CT3060
SCALE AS SHOWN
SHEET NO. 16 OF 16

04/02/2014 - RFP No.: HSR 13-57

JOS53823 12/30/2013 3:15:15 PM CAHSRP-r1.tbl CHSR_PDF_half_black_200dpi.pdfmarking\hmm\external\jos53823\dms72557\FB-CT-3060-P.dgn

## STREET CLOSURE

| STREET NAME | HST ALIGNMENT STA | LOCAL STANDARD |
|---|---|---|
| AVENUE 24 | 4330+50.00 | TULARE COUNTY |
| ROAD 80 | 4488+50.00 | KERN COUNTY |
| WOOLLOMES AVENUE | 4657.00 | KERN COUNTY |
| ELMO HIGHWAY | 4907.00 | KERN COUNTY |

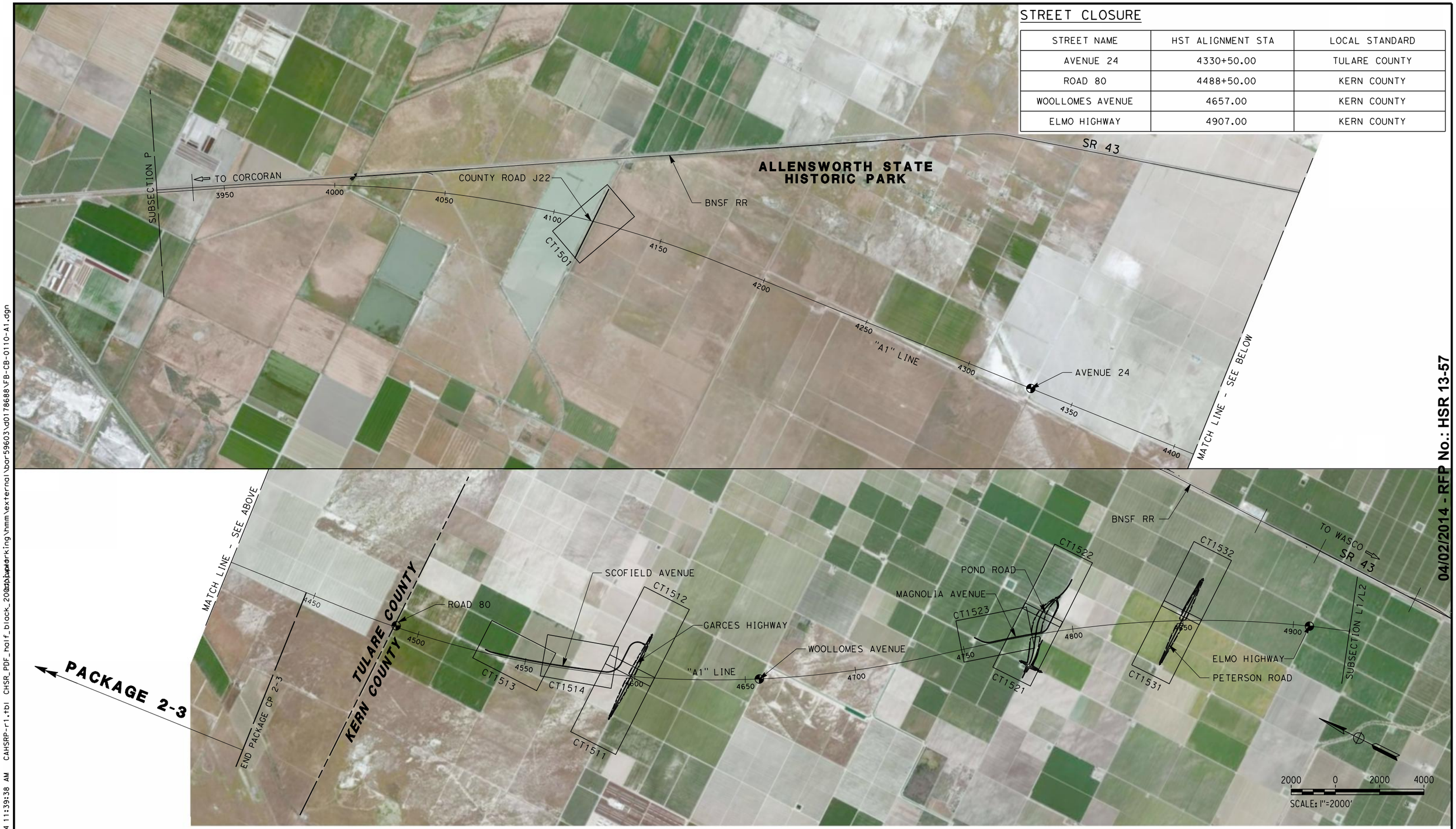


04/02/2014 - RFP No.: HSR 13-57

| REV | DATE | BY | CHK | APP | DESCRIPTION |
|---|---|---|---|---|---|
| | | | | | |

DESIGNED BY I. JOSIFEK
DRAWN BY P. BARBER
CHECKED BY T. CLIFFORD
IN CHARGE R. COFFIN
DATE 02/04/14

**RECORD SET 15% DESIGN SUBMISSION - NOT FOR CONSTRUCTION**

URS | HMM | ARUP
CALIFORNIA HIGH-SPEED TRAIN

CALIFORNIA
HIGH-SPEED RAIL AUTHORITY

# CALIFORNIA HIGH-SPEED TRAIN PROJECT
## FRESNO TO BAKERSFIELD
ALLENSWORTH BYPASS SUBSECTION
ALIGNMENT A1
ROADWAY/GRADE SEPARATION
KEY MAP

CONTRACT NO. HSR 06-0003
DRAWING NO. CB0110
SCALE AS SHOWN
SHEET NO. 1 OF 24

BAR59603 1/27/2014 11:39:38 AM CAHSRP-r1.tbl CHSR_PDF_half_black_200dpi.pwp d:\projects\working\hmm\external\bar59603\d0178688\FB-CB-0110-A1.dgn

"J22" 64+50.00
CONFORM

"A1" LINE

4110+00

4115+00

4120+00

4125+00

4130+00

ROADWAY ROW

LIMIT OF DITCH

LIMIT OF DITCH
TOE OF FILL

R=30'

"J22" 65+00.00 PI

CANAL REALIGNMENT

HST ROW

ROADWAY ROW

HST ROW

EP

EB

ACCESS ROAD

"J22" 48+67.44 POT=
"A1" 4118+11.64 POC

LIMIT OF DITCH
TOE OF FILL

LIMIT OF DITCH

MBGR (TYP)

BB

LIMIT OF DITCH

LIMIT OF DITCH
TOE OF FILL

"J22" LINE

CANAL REALIGNMENT

ROADWAY ROW

COUNTY ROAD J22

DRAINAGE DITCH (TYP)

LIMIT OF DITCH

LIMIT OF DITCH
TOE OF FILL

HST ROW

"J22" 30+00.00 PI

ROADWAY ROW

"J22" 32+50.00
CONFORM

LINE DATA

| NO. | BEARING | DISTANCE |
|---|---|---|
| 1 | N89°36'35"E | 3500.00' |

100 0 100 200
SCALE: 1"=100'

04/02/2014 - RFP No.: HSR 13-57

12/30/2013 11:59:32 AM CAHSRP-r1.tbl CHSR_PDF_half_black.plt c:\pwworking\hmm\external\bar50597\dms70925\FB-CT-1501-A1.dgn

BAR50597

| REV | DATE | BY | CHK | APP | DESCRIPTION |
|---|---|---|---|---|---|

DESIGNED BY I. JOSIFEK
DRAWN BY P. BARBER
CHECKED BY T. CLIFFORD
IN CHARGE R. COFFIN
DATE 12/31/13

**RECORD SET 15% DESIGN SUBMISSION - NOT FOR CONSTRUCTION**

URS | HMM | ARUP
CALIFORNIA HIGH-SPEED TRAIN

CALIFORNIA
HIGH-SPEED RAIL AUTHORITY

# CALIFORNIA HIGH-SPEED TRAIN PROJECT
# FRESNO TO BAKERSFIELD
ALLENSWORTH BYPASS SUBSECTION
ALIGNMENT A1
GRADE SEPARATION LAYOUT
COUNTY RD J22

CONTRACT NO. HSR 06-0003
DRAWING NO. CT1501
SCALE AS SHOWN
SHEET NO. 2 OF 24

NOTES:
1. MIN VERTICAL CLEARANCE OVER HST IS 27' FROM TOP OF RAIL

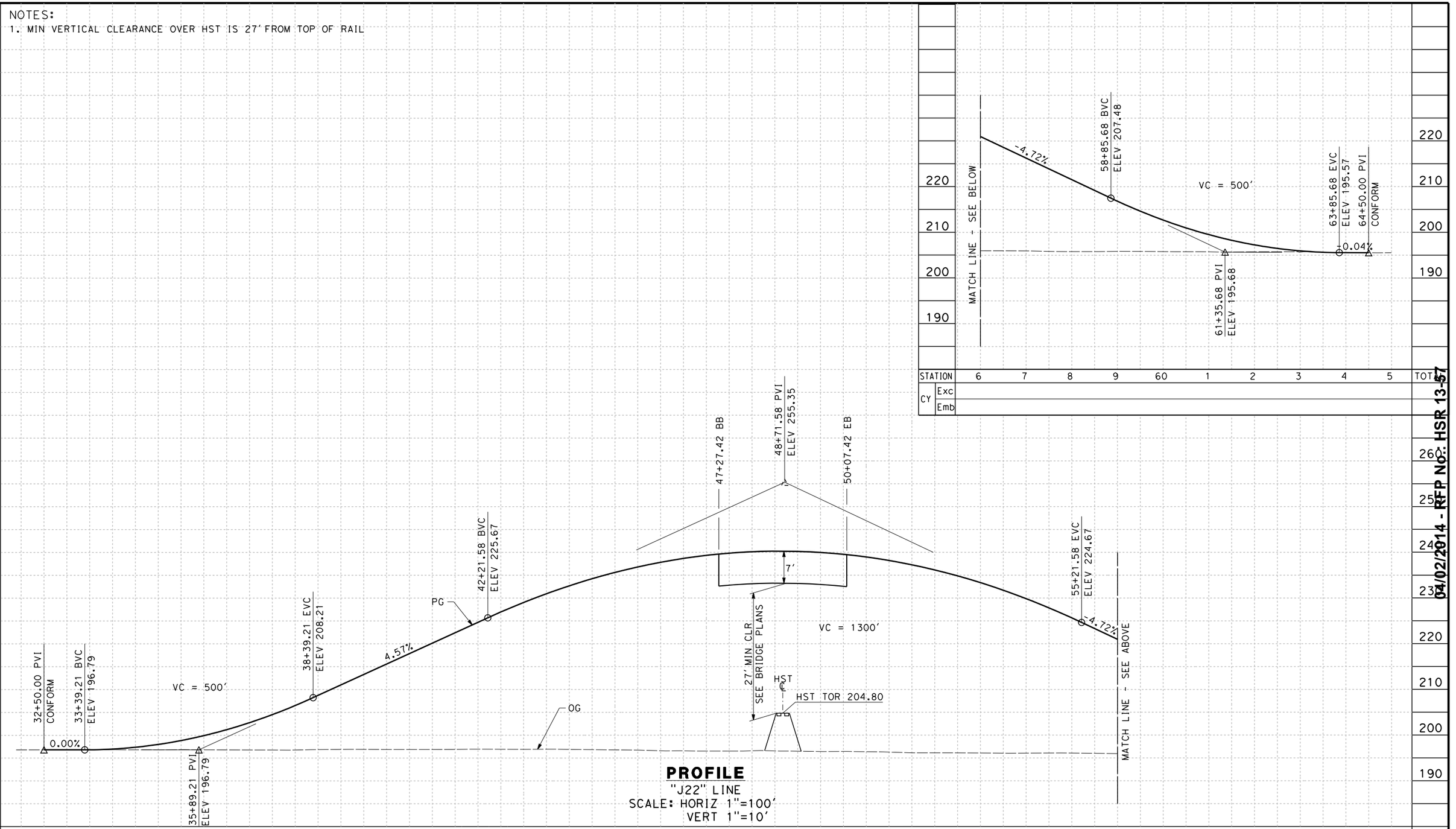


**PROFILE**
"J22" LINE
SCALE: HORIZ 1"=100'
VERT 1"=10'

| REV | DATE | BY | CHK | APP | DESCRIPTION |
|---|---|---|---|---|---|

DESIGNED BY I. JOSIFEK
DRAWN BY P. BARBER
CHECKED BY T. CLIFFORD
IN CHARGE R. COFFIN
DATE 12/31/13

**RECORD SET 15% DESIGN SUBMISSION - NOT FOR CONSTRUCTION**

URS | HMM | ARUP
CALIFORNIA HIGH-SPEED TRAIN

CALIFORNIA
HIGH-SPEED RAIL AUTHORITY

**CALIFORNIA HIGH-SPEED TRAIN PROJECT**
**FRESNO TO BAKERSFIELD**
ALLENSWORTH BYPASS SUBSECTION
ALIGNMENT A1
GRADE SEPARATION PROFILE
COUNTY RD J22

CONTRACT NO. HSR 06-0003
DRAWING NO. CT2501
SCALE AS SHOWN
SHEET NO. 12 OF 24

**04/02/2014 - RFP No: HSR 13-57**

12/30/2013 2:07:03 PM CAHSRP-r1.tbl CHSR_PDF_half_black.plt c:\pwworking\hmm\external\bar50597\dms70925\FB-CT-2501-A1.dgn
BAR50597

NOTES:

1. SUPERELEVATION AS SHOWN OR AS DIRECTED BY THE ENGINEER.
2. PAVEMENT SECTIONS ARE SHOWN FOR INFORMATIONAL PURPOSES ONLY. EXACT DIMENSIONS AND MATERIAL OF THE PAVEMENT SECTION TO BE CONFIRMED.

## STRUCTURAL SECTIONS

### TYPICAL ROADWAY

1 — 0.30' HMA (TYPE A)
1.40' CL 2 AB

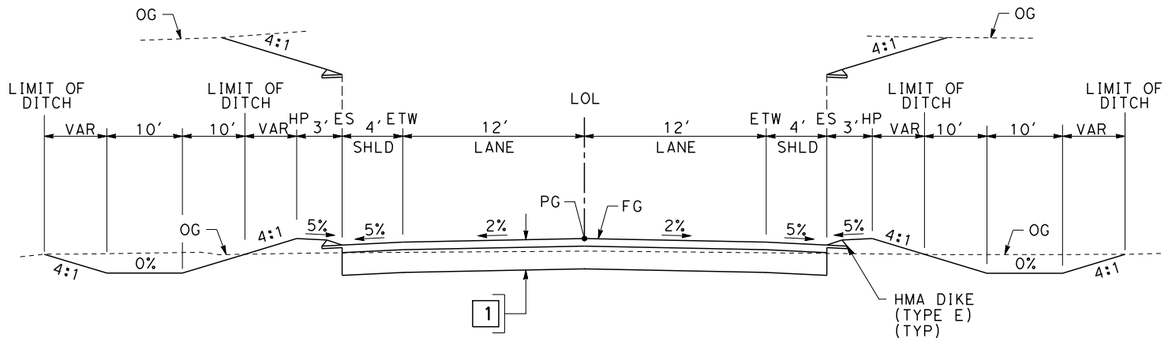


**SECTION A**

"J22" 33+00.00 TO 47+27.42
"J22" 50+07.42 TO 64+00.00
~~"GAR" 28+57.00 TO 48+59.88~~
~~"GAR" 51+39.88 TO 71+10.00~~
~~"PON" 16+50.00 TO 32+97.55~~
~~"PON" 35+97.55 TO 56+00.00~~
~~"PTR" 12+80.00 TO 32+73.57~~
~~"PTR" 35+73.57 TO 55+70.00~~

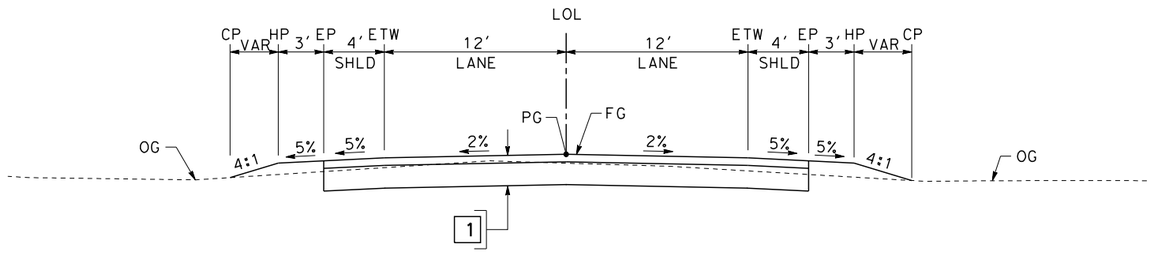


**SECTION B**

"J22" 32+50.00 TO 33+00.00
"J22" 64+00.00 TO 64+50.00
~~"GAR" 28+07.98 TO 28+57.00~~
~~"GAR" 71+10.00 TO 71+57.42~~
~~"SCO" 11+00.00 TO 92+20.94~~
~~"PON" 13+85.00 TO 16+50.00~~
~~"PON" 56+00.00 TO 60+40.00~~
~~"MAC" 10+00.00 TO 59+24.78~~
~~"MAG1" 18+30.00 TO 30+00.00~~
~~"PTR" 12+30.00 TO 12+80.00~~
~~"PTR" 55+70.00 TO 56+19.94~~

TABLE OF DESIGN SPEEDS

| STREET NAME | ALIGNMENT DESIGNATION | DESIGN SPEED | CRITERIA / JURISDICTION |
|---|---|---|---|
| COUNTY RD J22 | J22 | 50 | AASHTO/TULARE COUNTY |
| ~~GARCES HWY~~ | ~~GAR~~ | ~~65~~ | ~~KERN COUNTY/KERN COUNTY~~ |
| ~~SCOFIELD AVE~~ | ~~SCO~~ | ~~45(35x)~~ | ~~KERN COUNTY/KERN COUNTY~~ |
| ~~POND RD~~ | ~~PON~~ | ~~65~~ | ~~KERN COUNTY/KERN COUNTY~~ |
| ~~MAGNOLIA AVE~~ | ~~MAG~~ | ~~45(35x)~~ | ~~KERN COUNTY/KERN COUNTY~~ |
| ~~MAGNOLIA AVE(SOUTH)~~ | ~~MAG1~~ | ~~45~~ | ~~KERN COUNTY/KERN COUNTY~~ |
| ~~PETERSON RD~~ | ~~PTR~~ | ~~65~~ | ~~KERN COUNTY/KERN COUNTY~~ |

~~x WILL REQUIRE REDUCED DESIGN SPEED AT HORIZONTAL CURVE PRIOR TO STOP CONDITION.~~

| REV | DATE | BY | CHK | APP | DESCRIPTION |
|---|---|---|---|---|---|

DESIGNED BY I. JOSIFEK
DRAWN BY P. BARBER
CHECKED BY T. CLIFFORD
IN CHARGE R. COFFIN
DATE 02/04/14

**RECORD SET 15% DESIGN SUBMISSION - NOT FOR CONSTRUCTION**

URS | HMM | ARUP
CALIFORNIA HIGH-SPEED TRAIN

CALIFORNIA HIGH-SPEED RAIL AUTHORITY

**CALIFORNIA HIGH-SPEED TRAIN PROJECT**
**FRESNO TO BAKERSFIELD**
ALLENSWORTH BYPASS SUBSECTION
ALIGNMENT A1
ROADWAY/GRADE SEPARATION
TYPICAL CROSS SECTIONS

CONTRACT NO. HSR 06-0003
DRAWING NO. CT3070
SCALE AS SHOWN
SHEET NO. 24 OF 24

04/02/2014 - RFP No.: HSR 13-57

BAR59603 1/27/2014 11:33:43 AM CAHSRP-r1.tbl CHSR_PDF_half_black_2002.tbl C:\Users\barber\Desktop\working\hmm\external\bar59603\d0178688\FB-CT-3070-A1.dgn

# CALIFORNIA HIGH-SPEED TRAIN

## Roadway Structure Plans

# RECORD SET 15% DESIGN SUBMISSION

# Fresno to Bakersfield

## Overhead Planning Studies

December 2013

CALIFORNIA High-Speed Rail Authority

04/02/2014 - RFP No.: HSR 13-57

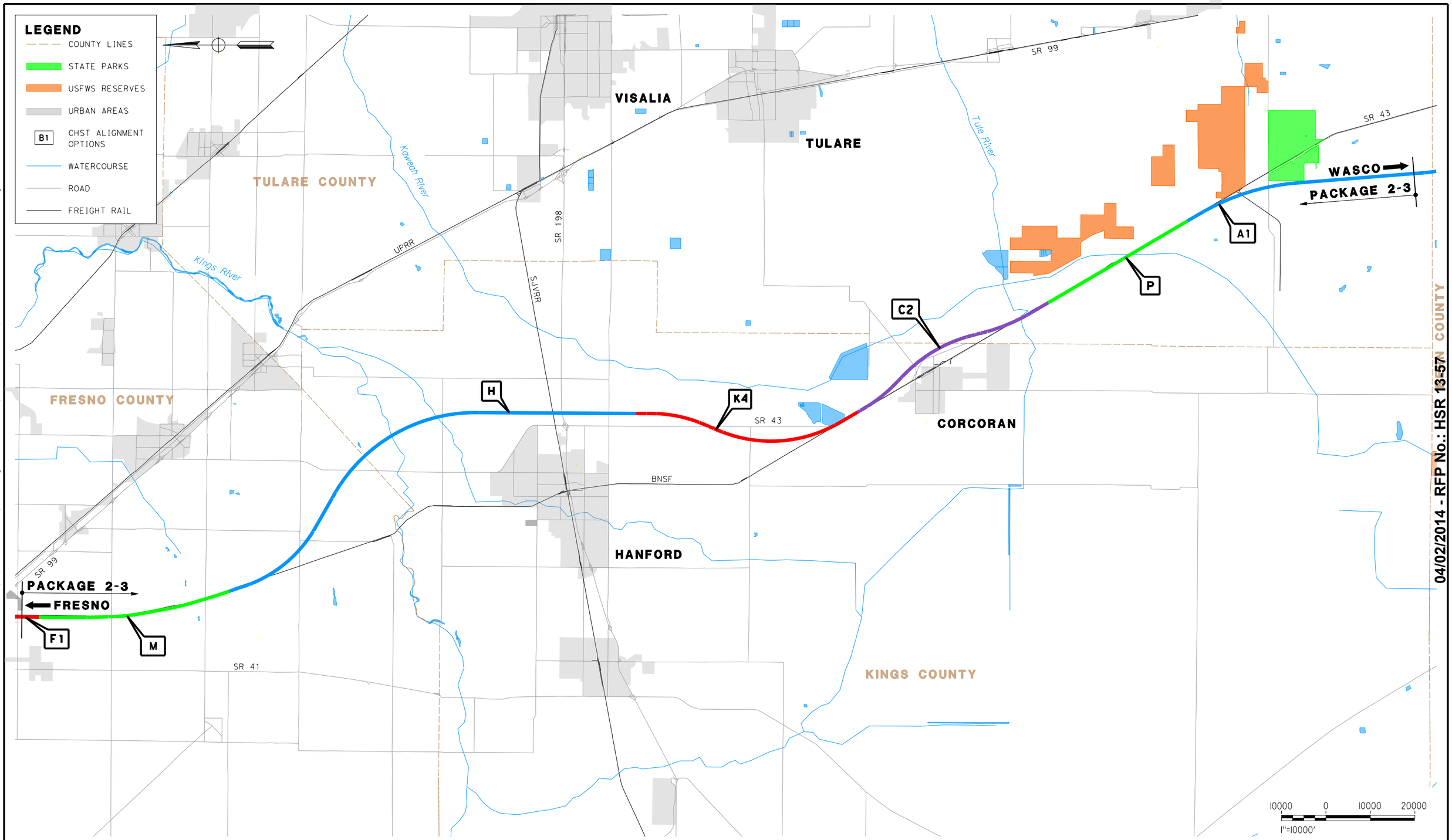


04/02/2014 - RFP No.: HSR 13-57

c:\pwworking\hmm\external\paul.tonkin01-arup.com\d0181257\2S-TT-B0001.dgn
CAHSRP-r1.tbl CHSR_PDF_half_color_200dpi.plt
1/31/2014 9:50:12 AM
paul.tonkin

| REV | DATE | BY | CHK | APP | DESCRIPTION |
|---|---|---|---|---|---|

DESIGNED BY K. SEYMOUR
DRAWN BY P. TONKIN
CHECKED BY D. HUNT
IN CHARGE R. COFFIN
DATE 02/04/14

**PROPOSED PRELIMINARY DESIGN**

**NOT FOR CONSTRUCTION**

URS | HMM | ARUP
CALIFORNIA HIGH-SPEED TRAIN

CALIFORNIA
HIGH-SPEED RAIL AUTHORITY

# CALIFORNIA HIGH-SPEED TRAIN PROJECT
# FRESNO TO BAKERSFIELD
PACKAGE 2-3
ALIGNMENT
LOCATION MAP

CONTRACT NO. HSR 06-0003
DRAWING NO. TT-B0001
SCALE AS SHOWN
SHEET NO. 1 OF 4

## GENERAL SHEETS

| DRAWING No | DRAWING DESCRIPTION | SHEET No |
|---|---|---|
| TT-B0001 | ALIGNMENT - LOCATION MAP | 1 OF 4 |
| GE-A0026 | ROADWAY STRUCTURES - INDEX OF SHEETS | 2 OF 4 |
| CB0010 | GENERAL - ABBREVIATIONS & LEGENDS | 3 OF 4 |
| CB0011 | GENERAL - ABBREVIATIONS & LEGENDS | 4 OF 4 |

## ALIGNMENT M - MONMOUTH SUBSECTION

| DRAWING No | DRAWING DESCRIPTION | SHEET No |
|---|---|---|
| SB0049 | MONMOUTH SUBSECTION - ALIGNMENT M - OVERHEAD PLANNING STUDY - KEY MAP | 1 OF 9 |
| ST2101 | MONMOUTH SUBSECTION - ALIGNMENT M - OVERHEAD PLANNING STUDY - E LINCOLN AVE | 2 OF 9 |
| ST2103 | MONMOUTH SUBSECTION - ALIGNMENT M - OVERHEAD PLANNING STUDY - E ADAMS AVE | 3 OF 9 |
| ST2104 | MONMOUTH SUBSECTION - ALIGNMENT M - OVERHEAD PLANNING STUDY - E SOUTH AVE | 4 OF 9 |
| ST2106 | MONMOUTH SUBSECTION - ALIGNMENT M - OVERHEAD PLANNING STUDY - E MANNING AVE | 5 OF 9 |
| ST2107 | MONMOUTH SUBSECTION - ALIGNMENT M - OVERHEAD PLANNING STUDY - E MANNING AVE | 6 OF 9 |
| ST2109 | MONMOUTH SUBSECTION - ALIGNMENT M - OVERHEAD PLANNING STUDY - E FLORAL AVE | 7 OF 9 |
| ST2111 | MONMOUTH SUBSECTION - ALIGNMENT M - OVERHEAD PLANNING STUDY - E NEBRASKA AVE | 8 OF 9 |
| ST2113 | MONMOUTH SUBSECTION - ALIGNMENT M - OVERHEAD PLANNING STUDY - E MOUNTAIN VIEW AVE | 9 OF 9 |

## ALIGNMENT H - HANFORD SUBSECTION

| DRAWING No | DRAWING DESCRIPTION | SHEET No |
|---|---|---|
| SB0050 | HANFORD SUBSECTION - ALIGNMENT H - OVERHEAD PLANNING STUDY - KEY MAP | 1 OF 14 |
| ST2117 | HANFORD SUBSECTION - ALIGNMENT H - OVERHEAD PLANNING STUDY - S CLOVIS AVE | 2 OF 14 |
| ST2119 | HANFORD SUBSECTION - ALIGNMENT H - OVERHEAD PLANNING STUDY - E ELKHORN AVE | 3 OF 14 |
| ST2121 | HANFORD SUBSECTION - ALIGNMENT H - OVERHEAD PLANNING STUDY - S FOWLER AVE | 4 OF 14 |
| ST2123 | HANFORD SUBSECTION - ALIGNMENT H - OVERHEAD PLANNING STUDY - E DAVIS AVE | 5 OF 14 |
| ST2129 | HANFORD SUBSECTION - ALIGNMENT H - OVERHEAD PLANNING STUDY - DOVER AVE | 6 OF 14 |
| ST2133 | HANFORD SUBSECTION - ALIGNMENT H - OVERHEAD PLANNING STUDY - EXCELSIOR AVE | 7 OF 14 |
| ST2135 | HANFORD SUBSECTION - ALIGNMENT H - OVERHEAD PLANNING STUDY - ELDER AVE | 8 OF 14 |
| ST2137 | HANFORD SUBSECTION - ALIGNMENT H - OVERHEAD PLANNING STUDY - FLINT AVE | 9 OF 14 |
| ST2139 | HANFORD SUBSECTION - ALIGNMENT H - OVERHEAD PLANNING STUDY - FARGO AVE | 10 OF 14 |
| ST2143 | HANFORD SUBSECTION - ALIGNMENT H - OVERHEAD PLANNING STUDY - HANFORD ARMONA RD | 11 OF 14 |
| ST2145 | HANFORD SUBSECTION - ALIGNMENT H - OVERHEAD PLANNING STUDY - HOUSTON AVE | 12 OF 14 |
| ST2146 | HANFORD SUBSECTION - ALIGNMENT H - OVERHEAD PLANNING STUDY - HOUSTON AVE | 13 OF 14 |
| ST2147 | HANFORD SUBSECTION - ALIGNMENT H - OVERHEAD PLANNING STUDY - IONA AVE | 14 OF 14 |

## ALIGNMENT K4 - KAWEAH SUBSECTION

| DRAWING No | DRAWING DESCRIPTION | SHEET No |
|---|---|---|
| SB0065 | KAWEAH SUBSECTION - ALIGNMENT K4 - OVERHEAD PLANNING STUDY - KEY MAP | 1 OF 5 |
| ST2200 | KAWEAH SUBSECTION - ALIGNMENT K4 - OVERHEAD PLANNING STUDY - IDAHO AVE | 2 OF 5 |
| ST2222 | KAWEAH SUBSECTION - ALIGNMENT K4 - OVERHEAD PLANNING STUDY - JACKSON AVE | 3 OF 5 |
| ST2226 | KAWEAH SUBSECTION - ALIGNMENT K4 - OVERHEAD PLANNING STUDY - KENT AVE | 4 OF 5 |
| ST2228 | KAWEAH SUBSECTION - ALIGNMENT K4 - OVERHEAD PLANNING STUDY - KANSAS AVE | 5 OF 5 |

## ALIGNMENT C2 - CORCORAN SUBSECTION

| DRAWING No | DRAWING DESCRIPTION | SHEET No |
|---|---|---|
| SB0075 | CORCORAN BYPASS SUBSECTION - ALIGNMENT C2 - OVERHEAD PLANNING STUDY - KEY MAP | 1 OF 3 |
| ST2239 | CORCORAN BYPASS SUBSECTION - ALIGNMENT C2 - OVERHEAD PLANNING STUDY - NEVADA AVE | 2 OF 3 |
| ST2244 | CORCORAN BYPASS SUBSECTION - ALIGNMENT C2 - OVERHEAD PLANNING STUDY - CORCORAN HWY | 3 OF 3 |

## ALIGNMENT P - PIXLEY SUBSECTION

| DRAWING No | DRAWING DESCRIPTION | SHEET No |
|---|---|---|
| SB0090 | PIXLEY SUBSECTION - ALIGNMENT P - OVERHEAD PLANNING STUDY - KEY MAP | 1 OF 5 |
| ST2401 | PIXLEY SUBSECTION - ALIGNMENT P - OVERHEAD PLANNING STUDY - AVE 128 | 2 OF 5 |
| ST2411 | PIXLEY SUBSECTION - ALIGNMENT P - OVERHEAD PLANNING STUDY - HESSE AVE | 3 OF 5 |
| ST2421 | PIXLEY SUBSECTION - ALIGNMENT P - OVERHEAD PLANNING STUDY - AVE 112 | 4 OF 5 |
| ST2431 | PIXLEY SUBSECTION - ALIGNMENT P - OVERHEAD PLANNING STUDY - AVE 88 | 5 OF 5 |

## ALIGNMENT A1 - ALLENSWORTH SUBSECTION

| DRAWING No | DRAWING DESCRIPTION | SHEET No |
|---|---|---|
| SB0100 | ALLENSWORTH BYPASS SUBSECTION - ALIGNMENT A1 - OVERHEAD PLANNING STUDY - KEY MAP | 1 OF 5 |
| ST2501 | ALLENSWORTH BYPASS SUBSECTION - ALIGNMENT A1 - OVERHEAD PLANNING STUDY - COUNTY RD J22 | 2 OF 5 |
| ~~ST2511~~ | ~~ALLENSWORTH BYPASS SUBSECTION - ALIGNMENT A1 - OVERHEAD PLANNING STUDY - GARCES HWY~~ | ~~3 OF 5~~ |
| ~~ST2521~~ | ~~ALLENSWORTH BYPASS SUBSECTION - ALIGNMENT A1 - OVERHEAD PLANNING STUDY - POND RD~~ | ~~4 OF 5~~ |
| ~~ST2531~~ | ~~ALLENSWORTH BYPASS SUBSECTION - ALIGNMENT A1 - OVERHEAD PLANNING STUDY - PETERSON RD~~ | ~~5 OF 5~~ |

**04/02/2014 - RFP No.: HSR 13-57**

| REV | DATE | BY | CHK | APP | DESCRIPTION |
|---|---|---|---|---|---|

DESIGNED BY P. TONKIN
DRAWN BY J. VALENZUELA
CHECKED BY K. SEYMOUR
IN CHARGE R. COFFIN
DATE 02/04/14

**PROPOSED PRELIMINARY DESIGN**

**NOT FOR CONSTRUCTION**

URS | HMM | ARUP
CALIFORNIA HIGH-SPEED TRAIN

CALIFORNIA
HIGH-SPEED RAIL AUTHORITY

**CALIFORNIA HIGH-SPEED TRAIN PROJECT**
**FRESNO TO BAKERSFIELD**
ROADWAY STRUCTURES
INDEX OF SHEETS
SHEET 1 OF 1

CONTRACT NO. HSR 06-0003
DRAWING NO. GE-A0026
SCALE NO SCALE
SHEET NO. 2 OF 4

c:\pwworking\hmm\external\paul.tonkin01-arup.com\d0181257\2S-GE-A0026.dgn
paul.tonkin 1/29/2014 11:41:27 AM CAHSRP-r1.tbl CHSR_PDF_half_black_200dpi.plt

## A

| | |
|---|---|
| AB | AGGREGATE BASE |
| ABBC | ASBESTOS BONDED BITUMINOUS COATED |
| ABM | AIR-BLOWN MORTAR |
| ABN | ABANDON |
| ABUT | ABUTMENT |
| AC | ASPHALT CONCRETE |
| ACB | ASPHALT CONCRETE BASE |
| ACP | ASBESTOS CEMENT PIPE |
| ADL | ADDED DEAD LOAD |
| ADJ | ADJUST |
| AFES | ALTERNATIVE FLARED END SECTION |
| AHD | AHEAD |
| ALT | ALTERNATE |
| AM | TIME FROM MIDNIGHT TO NOON |
| AP | ALTERNATIVE PIPE |
| APC | ALTERNATIVE PIPE CULVERT |
| APPROX | APPROXIMATE |
| APU | ALTERNATIVE PIPE UNDERDRAIN |
| ARS | ACCELERATION RESPONSE SPECTRUM |
| AR | ACCESS RESTRICTION |
| AS | AGGREGATE SUBBASE |
| ASRP | ALUMINUM SPIRAL RIB PIPE |
| ASSY | ASSEMBLY |
| ATPB | ASPHALT TREATED PERMEABLE BASE |
| ATPM | ASPHALT TREATED PERMEABLE MATERIAL |
| AVE | AVENUE |
| AVG | AVERAGE |
| @ | AT |

## B

| | |
|---|---|
| BAGR | BRIDGE APPROACH GUARD RAILING |
| BB | BEGINNING OF BRIDGE |
| BC | BEGIN HORIZONTAL CURVE |
| BCC | BALANCED CANTILEVER CONSTRUCTION |
| BCR | BEGIN CURB RETURN |
| BEG | BEGIN |
| BIT CTD | BITUMINOUS COATED |
| BK | BACK |
| BKF | BACKFILL |
| BLDG | BUILDING |
| BLM | BRIDGE-LOG MILE |
| BLVD | BOULEVARD |
| BM | BENCH MARK |
| BND | BOUND |
| BNSF | BURLINGTON NORTH & SANTA FE |
| BOT | BOTTOM |
| BR | BRIDGE |
| BRG | BEARING |
| BTU | BRITISH THERMAL UNIT |
| BVC | BEGIN VERTICAL CURVE |
| BW | BARBED WIRE |

## C

| | |
|---|---|
| CAA | CABLE ANCHOR ASSEMBLY |
| CAP | CORRUGATED ALUMINUM PIPE |
| CAPA | CORRUGATED ALUMINUM PIPE ARCH |
| CAS | CONSTRUCTION AREA SIGN |
| CB | CONCRETE BARRIER |
| CBW | CONCRETE BLOCK WALL |
| C-C | CENTER TO CENTER |

## C CONTINUED

| | |
|---|---|
| CHSRA | CALIFORNIA HIGH SPEED RAIL AUTHORITY |
| CHST | CALIFORNIA HIGH SPEED TRAIN |
| CHSR | CALIFORNIA HIGH SPEED RAIL |
| CG | CENTER OF GRAVITY |
| CHNL | CHANNEL |
| CI | CAST IRON |
| CIDH | CAST-IN-DRILLED-HOLE |
| CIP,C-I-P | CAST-IN-PLACE, CAST IRON PIPE |
| CIPCP | CAST IN PLACE CONCRETE PIPE |
| CISS | CAST-IN-STEEL-SHELL |
| CJP | COMPLETE JOINT PENETRATION |
| CL | CENTERLINE, CLASS |
| CL2 | CLASS 2 |
| CL-6 | CHAIN LINK FENCE (6 FT) |
| CLR | CLEAR, CLEARANCE |
| CM | CORRUGATED METAL |
| CMP | CORRUGATED METAL PIPE |
| CO | COUNTY |
| COL | COLUMN |
| CONC | CONCRETE |
| COND | CONDUIT |
| CONN | CONNECTOR |
| CONST | CONSTRUCT, CONSTRUCTION |
| CONT | CONTINUOUS |
| COORD | COORDINATE |
| CP | CLEARANCE POINT |
| CR | CREEK |
| CRCP | CONTINUOUS REINFORCED CONCRETE PAVEMENT |
| CRSP | CONCRETED ROCK SLOPE PROTECTION |
| CS | CURVE TO SPIRAL |
| CSP | CORRUGATED STEEL PIPE |
| CSPA | CORRUGATED STEEL PIPE ARCH |
| CTB | CEMENT TREATED BASE |
| CTPB | CEMENT TREATED PERMEABLE BASE |
| CTPM | CEMENT TREATED PERMEABLE MATERIAL |
| CTRS | CENTERS |
| CVFPB | CENTRAL VALLEY FLOOD PROTECTION BOARD |
| CULV | CULVERT |
| ℄ | CENTERLINE |

## D

| | |
|---|---|
| D | DEPTH |
| DD | DOWNDRAIN, DIRECTIVE DRILLING |
| DBL | DOUBLE |
| DEG | DEGREE |
| DEL | DELINEATOR |
| DET | DETAIL, DETOUR |
| DF | DOUGLAS FIR |
| DI | DRAINAGE INLET, DROP INLET |
| DIA | DIAMETER |
| DIAPH | DIAPHRAGM |
| DIST | DISTANCE, DISTRICT |
| DMBB | DOUBLE METAL BEAM BARRIER |
| DR | DRIVE |
| DTBB | DOUBLE THRIE BEAM BARRIER |
| DWY | DRIVEWAY |

## E

| | |
|---|---|
| E | EAST, EASTING |
| EA | ACTUAL SUPERELEVATION |
| EU | UNBALANCED SUPERELEVATION |

## E CONTINUED

| | |
|---|---|
| EASE | EASEMENT |
| EB | END OF BRIDGE, EASTBOUND |
| EC | END HORIZONTAL CURVE |
| ECR | END CURB RETURN |
| ED | EDGE DRAIN |
| EDC | EDGE DRAIN CLEANOUT |
| EDO | EDGE DRAIN OUTLET |
| EDV | EDGE DRAIN VENT |
| ELEC | ELECTROLIER |
| ELECT | ELECTRIC |
| ELEV | ELEVATION |
| EMB | EMBANKMENT |
| ENGR | ENGINEER |
| EOD | EDGE OF DECK |
| EP | EDGE OF PAVEMENT |
| EQ | EQUATION, EQUAL |
| ES | EDGE OF SHOULDER |
| ETW | EDGE OF TRAVELED WAY |
| EVC | END VERTICAL CURVE |
| EW | ENDWALL |
| EXC | EXCAVATION |
| EXIST, EX. | EXISTING |
| EXP | EXPANSION |
| EXP JT | EXPANSION JOINT |
| EXWY | EXPRESSWAY |
| EXT | EXTERIOR |

## F

| | |
|---|---|
| F & C | FRAME AND COVER |
| F & G | FRAME AND GRATE |
| FB | FLOOR BEAM |
| F-B | FRESNO TO BAKERSFIELD |
| FDN | FOUNDATION |
| FEBT | FACING EASTBOUND TRAFFIC |
| FES | FLARED END SECTION |
| FF | FILTER FABRIC |
| FG | FINISHED GRADE |
| FH | FIRE HYDRANT |
| FIG | FIGURE |
| FL | FLOW LINE |
| FNBT | FACING NORTHBOUND TRAFFIC |
| FOC | FACE OF CONCRETE |
| FR RD | FRONTAGE ROAD |
| FS | FAR SIDE, FINISHED SURFACE |
| FSBT | FACING SOUTHBOUND TRAFFIC |
| FT | FOOT, FEET |
| FTG | FOOTING |
| FWBT | FACING WESTBOUND TRAFFIC |
| FWY | FREEWAY |
| FPLM | FULL SPAN PRECAST LAUNCHING METHOD |

## G

| | |
|---|---|
| G | ACCELERATION DUE TO GRAVITY |
| GA | GAGE |
| GALV | GALVANIZED |
| GP | GRADING PLANE |
| GR | GUARD RAILING |
| GSP | GALVANIZED STEEL PIPE |
| GTR | GUTTER |

## H

| | |
|---|---|
| H | HEIGHT |
| HR | HOUR |
| HD | HORIZONTAL DRAIN |
| HDWL | HEADWALL |
| HEX HD | HEXAGONAL HEAD |
| HMA | HOT MIXED ASPHALT |
| HORIZ | HORIZONTAL |
| HP | HINGE POINT, HORSEPOWER |
| HPS | HIGH PERFORMANCE STEEL |
| HS | HIGH STRENGTH |
| HST | HIGH SPEED TRAIN |
| HSR | HIGH SPEED RAIL |
| HW | HEADWALL, HIGH WATER |
| HWM | HIGH WATER MARK |
| HWY | HIGHWAY |

## I

| | |
|---|---|
| IB | IMPORTED BORROW |
| ID | INSIDE DIAMETER |
| IF | INSIDE FACE |
| IN | INCH, INCHES |
| INT | INTERIOR |
| INV | INVERT |
| IRR | IRRIGATION |

## J

| | |
|---|---|
| JCT | JUNCTION |
| JP | JOINT POLE |
| JPCP | JOINTED PLAIN CONCRETE PAVEMENT |
| JS | JUNCTION STRUCTURE |
| JT | JOINT |

## K

| | |
|---|---|
| K | DISTANCE TO ACHIEVE 1% GRADE CHANGE |

## L

| | |
|---|---|
| L | LENGTH |
| LAT | LATITUDE |
| LCB | LEAN CONCRETE BASE |
| LN | LANE |
| LOC | LOCATION |
| LOL | LAYOUT LINE |
| LONG | LONGITUDE |
| LONGIT | LONGITUDINAL |
| LS | LENGTH OF SPIRAL |
| LC | LENGTH OF CURVE |
| LT | LEFT |

## M

| | |
|---|---|
| MAINT | MAINTENANCE |
| MAX | MAXIMUM |
| MB | METAL BEAM |
| MBB | METAL BEAM BARRIER |
| MBGR | METAL BEAM GUARD RAILING |
| MED | MEDIAN |
| M-F | MERCED TO FRESNO |
| MH | MANHOLE |
| MIN | MINIMUM |
| MISC | MISCELLANEOUS |
| MISC I & S | MISCELLANEOUS IRON AND STEEL |
| MKR | MARKER |
| M/L | MAIN LINE (RAILWAY) |

## M CONTINUED

| | |
|---|---|
| MOD | MODIFIED, MODIFY |
| MON | MONUMENT |
| MP | METAL PLATE |
| MPGR | METAL PLATE GUARD RAILING |
| MPH | MILES PER HOUR |
| MR | MOVEMENT RATING |
| MSE | MECHANICALLY STABILIZED EARTH |
| MTL | MATERIAL |
| MSS | MOVING SCAFFOLDING SYSTEM |

## N

| | |
|---|---|
| N | NORTH, NORTHING |
| NB | NORTHBOUND |
| NO. | NUMBER (MUST HAVE PERIOD) |
| NOS. | NUMBERS (MUST HAVE PERIOD) |
| NPS | NOMINAL PIPE SIZE |
| NS | NEAR SIDE |
| NTS | NOT TO SCALE |
| N/A | NOT APPLICABLE |

## O

| | |
|---|---|
| OBLR | OBLITERATE |
| OC | OVERCROSSING |
| OCS | OVERHEAD CONTACT SYSTEM |
| OD | OUTSIDE DIAMETER |
| OF | OUTSIDE FACE |
| OG | ORIGINAL GROUND |
| OGAC | OPEN GRADED ASPHALT CONCRETE |
| OH | OVERHEAD |
| O-O | OUT TO OUT |
| OPP | OPPOSITE |

## P

| | |
|---|---|
| P | PAGE |
| PAP | PERFORATED ALUMINUM PIPE |
| PB | PULL BOX |
| PC | POINT OF CURVATURE, PRECAST |
| PCC | POINT OF COMPOUND CURVE, PORTLAND CEMENT CONCRETE |
| PCP | PERFORATED CONCRETE PIPE, PRESTRESSED CONCRETE PIPE |
| PCVC | POINT OF COMPOUND VERTICAL CURVE |
| PED | PEDESTRIAN |
| PED OC | PEDESTRIAN OVERCROSSING |
| PED UC | PEDESTRIAN UNDERCROSSING |
| PERM MTL | PERMEABLE MATERIAL |
| PG | PROFILE GRADE |
| PI | POINT OF INTERSECTION |
| PJP | PARTIAL JOINT PENETRATION |
| ℄,PL | PLATE |
| P/L | PROPERTY LINE |
| PM | POST MILE, TIME FROM NOON TO MIDNIGHT |
| PN | PAVING NOTCH |
| POB | POINT OF BEGINNING |
| POC | POINT OF HORIZONTAL CURVE |
| POE | POINT OF ENDING |
| POT | POINT OF TANGENT |
| POVC | POINT OF VERTICAL CURVE |
| PP | PIPE PILE, PLASTIC PIPE, POWER POLE |
| PPL | PREFORMED PERMEABLE LINER |
| PPP | PERFORATED PLASTIC PIPE |
| PRC | POINT OF REVERSE CURVE |

04/02/2014 - RFP No.: HSR 13-57

| REV | DATE | BY | CHK | APP | DESCRIPTION |
|---|---|---|---|---|---|
| | | | | | |

DESIGNED BY K. SEYMOUR
DRAWN BY P. TONKIN
CHECKED BY D. HUNT
IN CHARGE R. COFFIN
DATE 02/04/14

**RECORD SET 15% DESIGN SUBMISSION - NOT FOR CONSTRUCTION**

URS | HMM | ARUP
CALIFORNIA HIGH-SPEED TRAIN

CALIFORNIA
HIGH-SPEED RAIL AUTHORITY

# CALIFORNIA HIGH-SPEED TRAIN PROJECT
# FRESNO TO BAKERSFIELD
GENERAL
ABBREVIATIONS AND LEGENDS
SHEET 1 OF 2

CONTRACT NO. HSR 06-0003
DRAWING NO. CB0010
SCALE NO SCALE
SHEET NO. 3 OF 4

1/28/2014 10:33:09 AM c:\pwworking\hmm\external\paul.tonkin01-arup.com\d0181257\VFB-CB-0010.dgn paul.tonkin

## P CONTINUED

| | |
|---|---|
| PRF | PAVEMENT REINFORCING FABRIC |
| PRVC | POINT OF REVERSE VERTICAL CURVE |
| PS&E | PLANS, SPECIFICATIONS AND ESTIMATES |
| PS, P/S | PRESTRESSED, PARALLEL STATION |
| PSP | PERFORATED STEEL PIPE |
| PT | POINT OF TANGENCY |
| PVC | POLYVINYL CHLORIDE |
| PVI | POINT OF VERTICAL INTERSECTION |
| PVMT | PAVEMENT |
| PVP | MAINTENANCE VEHICLE PULLOUT |

## Q

| | |
|---|---|
| QTY | QUANTITY |

## R

| | |
|---|---|
| R | RADIUS |
| R & D | REMOVE AND DISPOSE |
| R & S | REMOVE AND SALVAGE |
| R/C | RATE OF CHANGE |
| RCA | REINFORCED CONCRETE ARCH |
| RCB | REINFORCED CONCRETE BOX |
| RCP | REINFORCED CONCRETE PIPE |
| RCPA | REINFORCED CONCRETE PIPE ARCH |
| RD | ROAD |
| REINF | REINFORCED, REINFORCEMENT, REINFORCING |
| REL | RELOCATE |
| REPL | REPLACEMENT |
| RET | RETAINING |
| REV | REVISED |
| RDWY | ROADWAY |
| RM | ROAD-MIXED |
| RP | RADIUS POINT, REFERENCE POINT |
| RR | RAILROAD |
| RSP | ROCK SLOPE PROTECTION |
| RT | RIGHT |
| RTE | ROUTE |
| RW | REDWOOD, RETAINING WALL |
| R/W, ROW | RIGHT OF WAY |
| RWY | RAILWAY |

## S

| | |
|---|---|
| S | SOUTH, SUPPLEMENT |
| SAE | STRUCTURE APPROACH EMBANKMENT |
| SALV | SALVAGE |
| SAPP | STRUCTURAL ALUMINUM PLATE PIPE |
| SB | SOUTHBOUND |
| SC | SPIRAL TO CURVE |
| SCSP | SLOTTED CORRUGATED STEEL PIPE |
| SD | STORM DRAIN |
| SEC | SECOND |
| SECT | SECTION |
| SEP | SEPARATION |
| SG | SUBGRADE |
| SHLD | SHOULDER |
| SHT | SHEET |
| SIM | SIMILAR |
| S | STATION LINE |
| SM | SELECTED MATERIAL |
| SPEC | SPECIAL, SPECIFICATIONS |
| SPP | SLOTTED PLASTIC PIPE |
| SS | SLOPE STAKE, SPIRAL TO SPIRAL |

## S CONTINUED

| | |
|---|---|
| SSBM | STRAP AND SADDLE BRACKET METHOD |
| SSD | STRUCTURAL SECTION DRAIN |
| SSPA | STRUCTURAL STEEL PLATE ARCH |
| SSPP | STRUCTURAL STEEL PLATE PIPE |
| SSPPA | STRUCTURAL STEEL PLATE PIPE ARCH |
| SSRP | STEEL SPIRAL RIB PIPE |
| SR | STATE ROUTE |
| ST | STREET, SPIRAL TO TANGENT |
| STA | STATION |
| STBB | SINGLE THRIE BEAM BARRIER |
| STD | STANDARD |
| STR | STRUCTURE |
| SRS | STAND ALONE RADIO SITE |
| SURF | SURFACING |
| SW | SIDEWALK, SOUND WALL |
| SWR | SEWER |
| SWS | SWITCHING STATION |
| SYM | SYMMETRICAL |
| S4S | SURFACE 4 SIDES |
| SJVR | SAN JOAQUIN VALLEY RAILROAD |

## T

| | |
|---|---|
| T | SEMI-TANGENT |
| TAB | TABLET |
| TAN | TANGENT |
| TBB | THRIE BEAM BARRIER |
| TBR | TIMBER |
| TC | TOP OF CURB, TANGENT TO CURVE |
| TCB | TRAFFIC CONTROL BOX |
| TEL | TELEPHONE |
| TEMP | TEMPORARY |
| TG | TOP OF GRADE |
| TOT | TOTAL |
| TM | TECHNICAL MEMORANDUM |
| TP | TELEPHONE POLE |
| TPB | TREATED PERMEABLE BASE |
| TPM | TREATED PERMEABLE MATERIAL |
| TPSS | TRACTION POWER SUPPLY STATION |
| TRANS | TRANSITION, TRANSVERSE |
| TS | TRAFFIC SIGNAL, TUBULAR STEEL, TANGET TO SPIRAL |
| TYP | TYPICAL |
| TOR | TOP OF RAIL |

## U

| | |
|---|---|
| UC | UNDERCROSSING |
| UD | UNDERDRAIN |
| UON | UNLESS OTHERWISE NOTED |
| UP | UNDERPASS |
| UPRR | UNION PACIFIC RAILROAD |
| USFWS | UNITED STATES FISH AND WILDLIFE SERVICE |

## V

| | |
|---|---|
| V | VALVE, DESIGN SPEED |
| VAR | VARIABLE |
| VC | VERTICAL CURVE |
| VCP | VITRIFIED CLAY PIPE |
| VERT | VERTICAL |
| VIA | VIADUCT |
| VOL | VOLUME |

## W

| | |
|---|---|
| W | WEST, WIDTH |
| WB | WESTBOUND |
| WH | WEEP HOLE |
| WM | WIRE MESH |
| WS | WATER SURFACE |
| WSP | WELDED STEEL PIPE |
| WT | WEIGHT |
| WV | WATER VALVE |
| WW | WINGWALL |
| WWLOL | WINGWALL LAYOUT LINE |
| W/ | WITH |

## X

| | |
|---|---|
| X SEC | CROSS SECTION |
| XING | CROSSING |

## Y

| | |
|---|---|
| YR | YEAR |
| YRS | YEARS |

## LEGEND

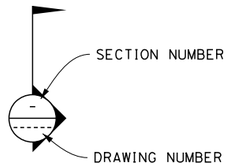


PROPOSED ELECTRICITY LINE

EXISTING ELECTRICITY LINE

EXISTING OVERHEAD ELECTRICITY LINE

PROPOSED OVERHEAD ELECTRICTY LINE

PROPOSED HST RIGHT OF WAY

PROPOSED HST TRACK CENTERLINE

RETAINING WALL

TOE OF SLOPE / TOP OF CUT

PROPOSED TEMPORARY CONSTRUCTION EASEMENT

CONTROL LINE EXAMPLE "A" LINE

255+00 260+00 265+00

OR

TRACK (PLAN AND ELEVATION)

TRACK TO BE REMOVED AND RELOCATED PER BNSF

REMOVE BASE & SURFACING

SOUND BARRIER (POTENTIAL)

DIRECTION OF FLOW

WATER SURFACE

## GENERAL NOTES

1. TRACK PROFILE IS DESIGNED AS TOP OF THE LOW RAIL. VERTICAL CLEARANCE REQUIREMENTS ARE MEASURED FROM THE TOP OF THE HIGH RAIL ON SUPERELEVATED TRACK. THE CLEARANCE ENVELOPES SHOWN DEMONSTRATE THE MINIMUM CLEARANCE REQUIREMENTS.

2. MINIMUM VERTICAL CLEARANCE REQUIREMENTS TO CANALS AND DITCHES ARE NOT KNOWN. FURTHER CONSULTATION WITH THE WATERCOURSE OWNERS WILL BE REQUIRED TO DETERMINE NECESSARY CLEARANCES.

3. THE FOLLOWING ARE ROADWAY DESIGN STANDARDS AND GUIDELINES:
   A. CALTRANS HIGHWAY DESIGN MANUAL (2012)
   B. AASHTO A POLICY ON GEOMETRIC DESIGN OF HIGHWAYS AND STREETS (2011)
   C. AASHTO ROADSIDE DESIGN GUIDE (2011)
   D. APPLICABLE LOCAL DESIGN STANDARD AND GUIDELINES (I.E., CITY OF FRESNO)

4. THE FEMA FLOODPLAIN BOUNDARIES ARE CALLED OUT AS "LIMIT OF 100YR FEMA FLOODPLAIN". THE LIMITS OF THE MODELED 100 YEAR WATER SURFACE ELEVATIONS (WSE) ARE APPROXIMATE AND ARE MARKED WITH THE NAME OF THE WATERBODY ASSOCIATED WITH THE MODELED FLOODING, E.G. "LIMIT OF POSO CREEK FLOODPLAIN".

5. THE STRUCTURE DESIGN ASSUMES THAT THE DEPTH FROM TOR TO TOP OF DECK IS 2'-6" THROUGHOUT. HOWEVER, WHERE BALLASTED TRACK FORM IS USED, THE HEIGHT FROM TOR TO DECK SHALL BE 2'-9" PLUS AN ALLOWANCE FOR WATERPROOF MEMBRANE, AND PROTECTION LAYER IF REQUIRED. FOR SLAB TRACKFORM, THE HEIGHT FROM TOR TO DECK SHALL BE 2'-6" PLUS AN ALLOWANCE FOR WATERPROOF MEMBRANE AND PROTECTION LAYER IF REQUIRED.

6. WHERE THE VERTICAL ALIGNMENT GRADE IS LESS THAN 0.5% THE UPPER SURFACE OF THE VIADUCT STRUCTURE SHALL BE PROFILED TO GIVE A MINIMUM LONGITUDINAL FALL OF 0.5%. TYPICALLY FOR A SPAN OF 120'-00" ON A 0% GRADE SECTION OF VIADUCT THIS COULD BE ACHIEVED BY MODIFYING THE CROSS SLOPE OF THE GIRDER LINEARLY BETWEEN 0.8% AT MID-SPAN TO 2% AT EACH END.

7. WHEN LATERAL SEPARATION BETWEEN THE CONVENTIONAL RAILROAD AND HST SYSTEM IS LESS THAN 102', A SITE SPECIFIC HAZARD ANALYSIS WILL BE CONDUCTED TO DETERMINE WHAT SPECIFIC COLLISION PROTECTION MEASURES MAY NEED TO BE IMPLEMENTED.

8. RIP-RAP PROTECTION IS REQUIRED FOR EMBANKMENTS WITHIN FEMA SPECIAL FLOOD HAZARD ZONES, IN ACCORDANCE WITH DESIGN CRITERIA.

9. HST ALIGNMENT CONTROL LINE IS DESIGNED AS THE CENTERLINE BETWEEN THE TWO MAINLINE TRACKS.

10. TRACK FORM USED IN TYPICAL SECTIONS IS INDICATIVE.

DIRECTION OF TRAFFIC

POINT OF MINIMUM VERTICAL CLEARANCE
ROAD CLOSURE (ROADWAYS)

1 LINE DATA

1 3 CURVE DATA (ALIGNMENTS)
CURVE DATA (STRUCTURES)

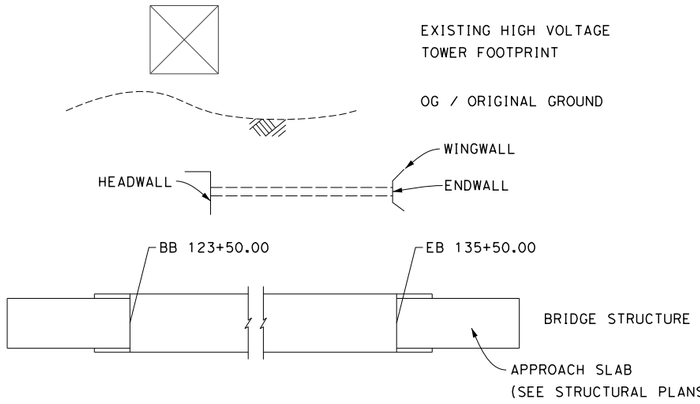


04/02/2014 - RFP No.: HSR 13-57

| REV | DATE | BY | CHK | APP | DESCRIPTION |
|---|---|---|---|---|---|

DESIGNED BY K. SEYMOUR
DRAWN BY P. TONKIN
CHECKED BY D. HUNT
IN CHARGE R. COFFIN
DATE 02/04/14

**RECORD SET 15% DESIGN SUBMISSION - NOT FOR CONSTRUCTION**

URS | HMM | ARUP
CALIFORNIA HIGH-SPEED TRAIN

CALIFORNIA HIGH-SPEED RAIL AUTHORITY

# CALIFORNIA HIGH-SPEED TRAIN PROJECT FRESNO TO BAKERSFIELD

GENERAL
ABBREVIATIONS AND LEGENDS
SHEET 2 OF 2

CONTRACT NO. HSR 06-0003
DRAWING NO. CB0011
SCALE NO SCALE
SHEET NO. 4 OF 4

paul.tonkin 1/28/2014 10:28:41 AM c:\pwworking\hmm\external\paul.tonkin01-arup.com\d0181257\FB-CB-0011.dgn

E LINCOLN AVE
ALIGNMENT F1
ST2101
650
E ADAMS AVE
ST2103
700
E SOUTH AVE
ST2104
750
E MANNING AVE
ST2107
800
ST2106
"M" LINE
850
E FLORAL AVE
ST2109
900
BNSF
E NEBRASKA AVE
ST2111
950
E MOUNTAIN VIEW AVE
ST2113
1000
1050
ALIGNMENT H, HW & HW2
E CONEJO AVE
BOWLES
MONMOUTH
SR 41
SR 43
S CEDAR AVE
S CLOVIS AVE
S FOWLER AVE

LEGEND
EXISTING FREIGHT RAILROAD
PROPOSED CHST

2000 0 2000 4000
1"=2000'

04/02/2014 - RFP No.: HSR 13-57

| REV | DATE | BY | CHK | APP | DESCRIPTION |
|---|---|---|---|---|---|
| | | | | | |

DESIGNED BY L. SMITH
DRAWN BY D. BARNHART
CHECKED BY E. MORAN
IN CHARGE R. COFFIN
DATE 12/31/13

RECORD SET 15% DESIGN SUBMISSION - NOT FOR CONSTRUCTION

URS | HMM | ARUP
CALIFORNIA HIGH-SPEED TRAIN

CALIFORNIA HIGH-SPEED RAIL AUTHORITY

# CALIFORNIA HIGH-SPEED TRAIN PROJECT
## FRESNO TO BAKERSFIELD
MONMOUTH SUBSECTION
ALIGNMENT M
OVERHEAD PLANNING STUDY
KEY MAP

CONTRACT NO. HSR 06-0003
DRAWING NO. SB0049
SCALE AS SHOWN
SHEET NO. 1 OF 9

12/18/2013 3:08:52 PM c:\pwworking\hmm\vexternal\pre45072\dms91110\FB-SB-0049-M.dgn
PRE45072

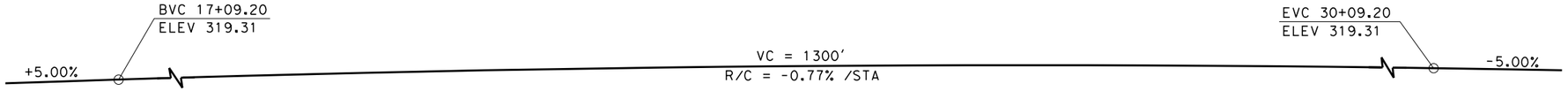


## PROFILE GRADE
NO SCALE

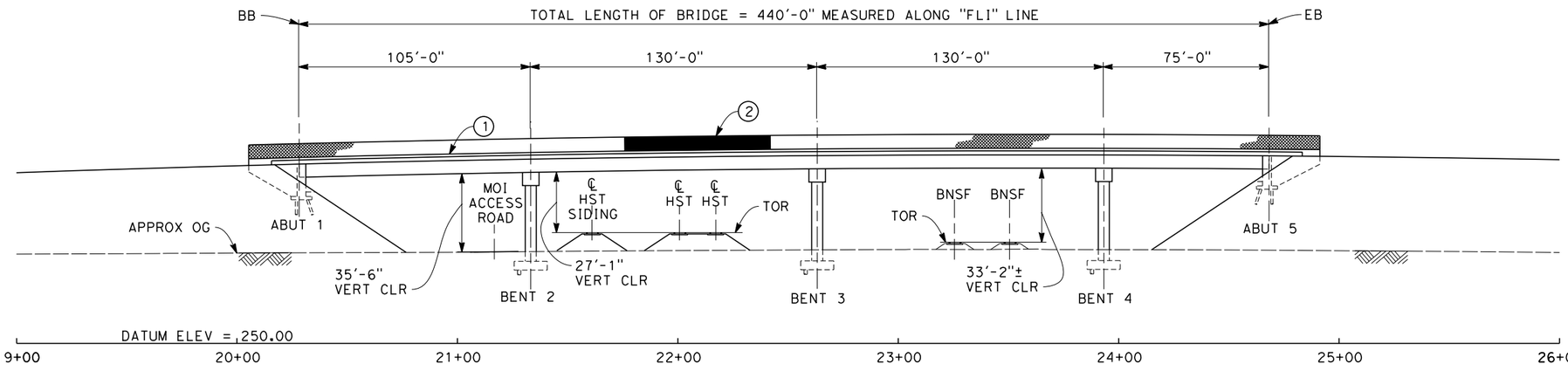


## ELEVATION
SCALE: 1"=30'

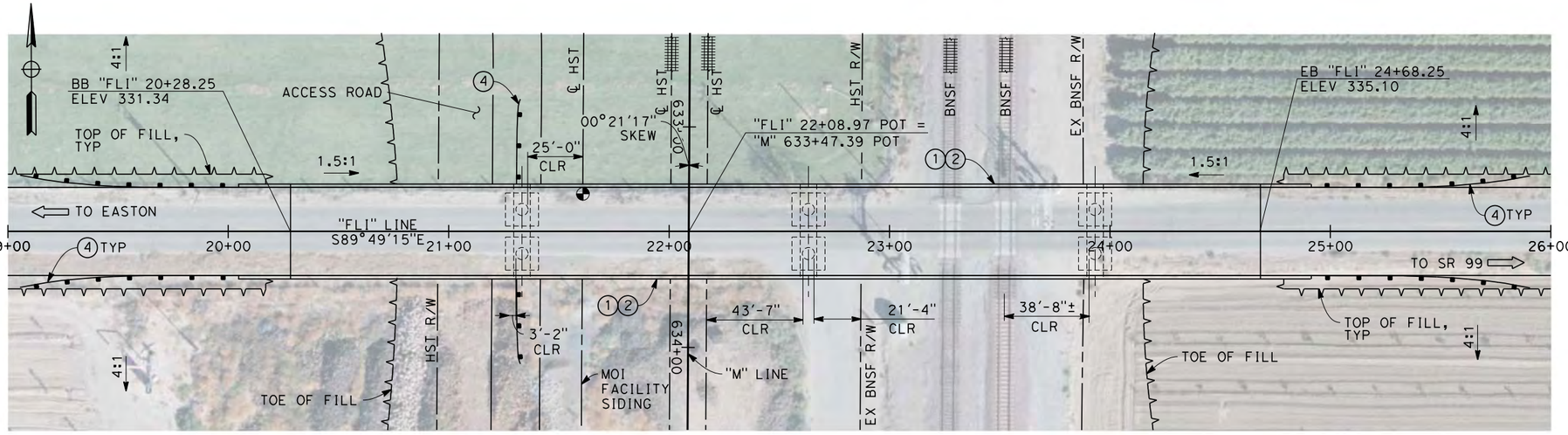


## PLAN
SCALE: 1"=30'

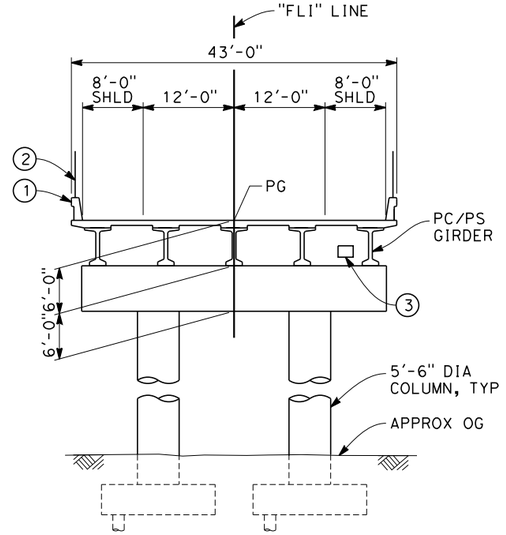


## TYPICAL SECTION
SCALE: 1"=10'

NOTES:
1. ALL PILES NOT SHOWN
2. FOR MINIMUM VERTICAL CLEARANCES, HORIZONTAL CURVE DATA, AND DETAILS NOT SHOWN, SEE ROADWAY PLANS.

LEGEND:
1. CONCRETE BARRIER WITH AR FENCE
2. AR FENCE WITH SOLID PLATE OVER HST
3. FUTURE UTILITY ENCASEMENT OPENING
4. MBGR

10 0 10 20 — 1"=10'
30 0 30 60 — 1"=30'

04/02/2014 - RFP No.: HSR 13-57

12/24/2013 7:41:15 AM c:\pwworking\hmm\external\pre45072\dms91110\FB-ST-2101-M.dgn
PRE45072

| REV | DATE | BY | CHK | APP | DESCRIPTION |
|---|---|---|---|---|---|

DESIGNED BY L. SMITH
DRAWN BY T. PRETZER
CHECKED BY E. MORAN
IN CHARGE R. COFFIN
DATE 12/31/13

RECORD SET 15% DESIGN SUBMISSION - NOT FOR CONSTRUCTION

URS | HMM | ARUP
CALIFORNIA HIGH-SPEED TRAIN

CALIFORNIA HIGH-SPEED RAIL AUTHORITY

# CALIFORNIA HIGH-SPEED TRAIN PROJECT
# FRESNO TO BAKERSFIELD
MONMOUTH SUBSECTION
ALIGNMENT M
OVERHEAD PLANNING STUDY
E LINCOLN AVE

CONTRACT NO. HSR 06-0003
DRAWING NO. ST2101
SCALE AS SHOWN
SHEET NO. 2 OF 9

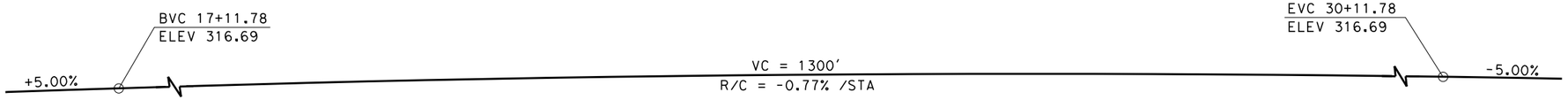


## PROFILE GRADE
NO SCALE

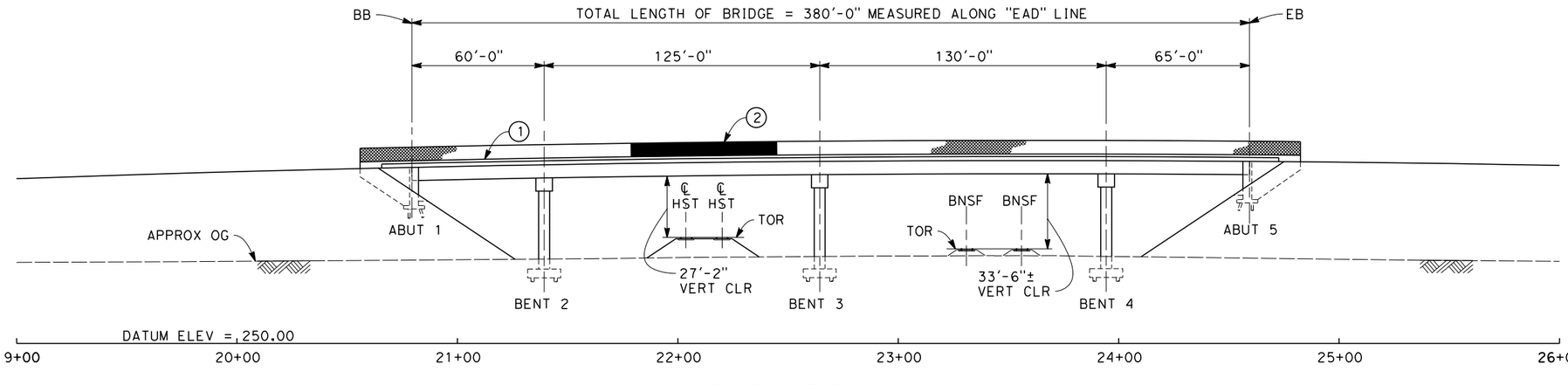


## ELEVATION
SCALE: 1"=30'

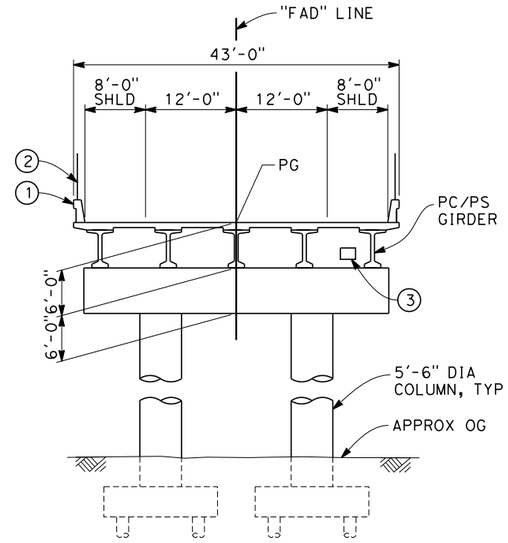


## TYPICAL SECTION
SCALE: 1"=10'

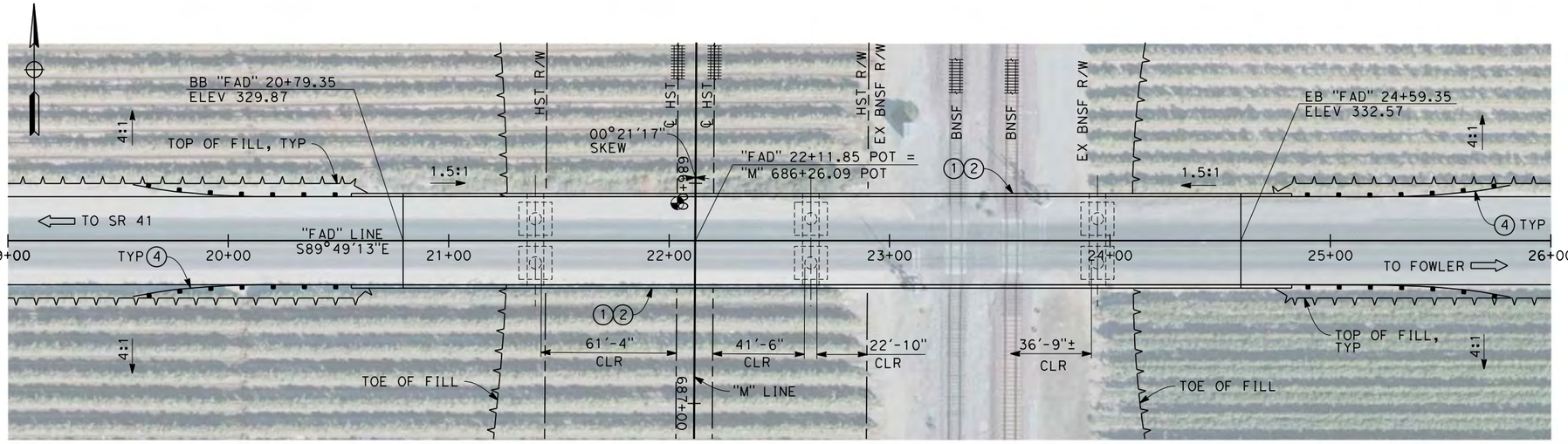


## PLAN
SCALE: 1"=30'

NOTES:
1. ALL PILES NOT SHOWN
2. FOR MINIMUM VERTICAL CLEARANCES, HORIZONTAL CURVE DATA, AND DETAILS NOT SHOWN, SEE ROADWAY PLANS.

LEGEND:
1. CONCRETE BARRIER WITH AR FENCE
2. AR FENCE WITH SOLID PLATE OVER HST
3. FUTURE UTILITY ENCASEMENT OPENING
4. MBGR

10 0 10 20 — 1"=10'

30 0 30 60 — 1"=30'

| REV | DATE | BY | CHK | APP | DESCRIPTION |
|---|---|---|---|---|---|
| | | | | | |

DESIGNED BY L. SMITH
DRAWN BY T. PRETZER
CHECKED BY E. MORAN
IN CHARGE R. COFFIN
DATE 12/31/13

**RECORD SET 15% DESIGN SUBMISSION - NOT FOR CONSTRUCTION**

URS | HMM | ARUP — CALIFORNIA HIGH-SPEED TRAIN

CALIFORNIA HIGH-SPEED RAIL AUTHORITY

# CALIFORNIA HIGH-SPEED TRAIN PROJECT
# FRESNO TO BAKERSFIELD
MONMOUTH SUBSECTION
ALIGNMENT M
OVERHEAD PLANNING STUDY
E ADAMS AVE

CONTRACT NO. HSR 06-0003
DRAWING NO. ST2103
SCALE AS SHOWN
SHEET NO. 3 OF 9

04/02/2014 - RFP No.: HSR 13-57

12/24/2013 7:52:06 AM c:\pwworking\hmm\external\pre45072\dms91110\FB-ST-2103-M.dgn

PRE45072

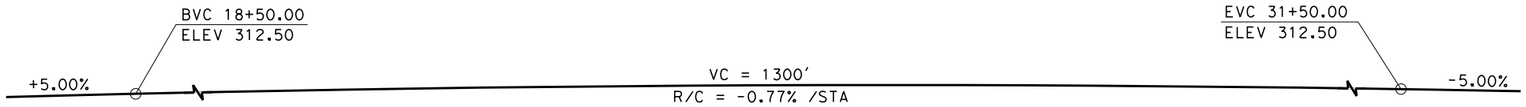


## PROFILE GRADE
NO SCALE

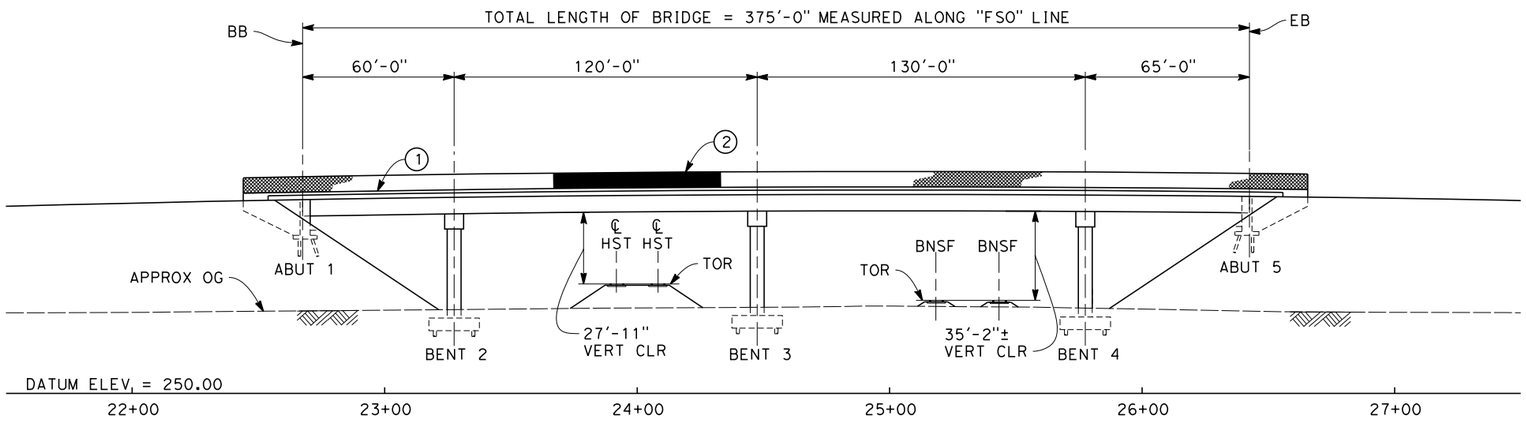


## ELEVATION
SCALE: 1"=30'

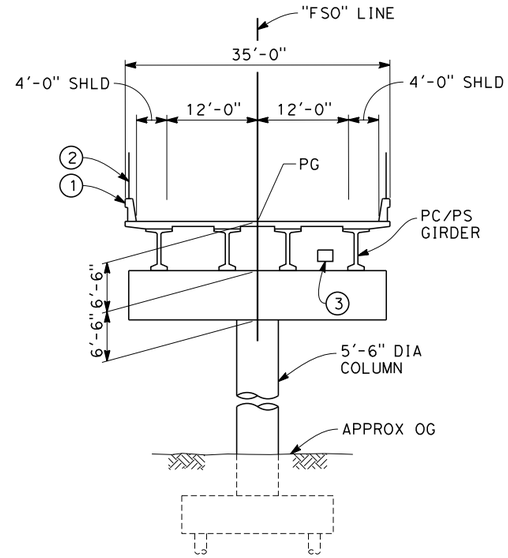


## TYPICAL SECTION
SCALE: 1"=10'

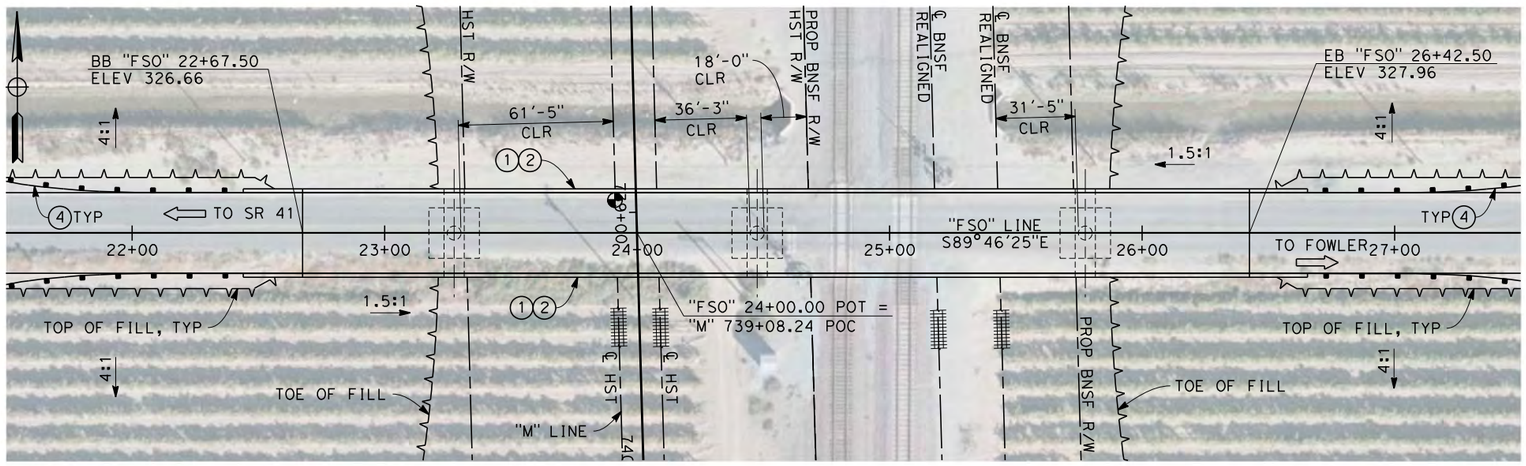


## PLAN
SCALE: 1"=30'

NOTES:
1. ALL PILES NOT SHOWN
2. FOR MINIMUM VERTICAL CLEARANCES, HORIZONTAL CURVE DATA, AND DETAILS NOT SHOWN, SEE ROADWAY PLANS.

LEGEND:

1. CONCRETE BARRIER WITH AR FENCE
2. AR FENCE WITH SOLID PLATE OVER HST
3. FUTURE UTILITY ENCASEMENT OPENING
4. MBGR

10 0 10 20 — 1"=10'

30 0 30 60 — 1"=30'

04/02/2014 - RFP No.: HSR 13-57

12/24/2013 10:15:15 AM c:\pwworking\hmm\external\pre45072\dms91110\FB-ST-2104-M.dgn

PRE45072

| REV | DATE | BY | CHK | APP | DESCRIPTION |
|---|---|---|---|---|---|

DESIGNED BY L. SMITH
DRAWN BY T. PRETZER
CHECKED BY B. LUSCOMBE
IN CHARGE R. COFFIN
DATE 12/31/13

**RECORD SET 15% DESIGN SUBMISSION - NOT FOR CONSTRUCTION**

URS | HMM | ARUP
CALIFORNIA HIGH-SPEED TRAIN

CALIFORNIA HIGH-SPEED RAIL AUTHORITY

**CALIFORNIA HIGH-SPEED TRAIN PROJECT**
**FRESNO TO BAKERSFIELD**
MONMOUTH SUBSECTION
ALIGNMENT M
OVERHEAD PLANNING STUDY
E SOUTH AVE

CONTRACT NO. HSR 06-0003
DRAWING NO. ST2104
SCALE AS SHOWN
SHEET NO. 4 OF 9

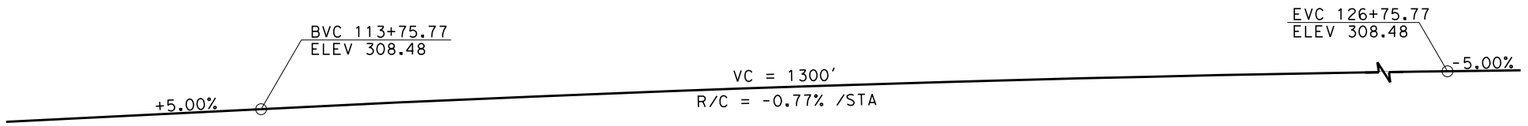


## PROFILE GRADE
NO SCALE

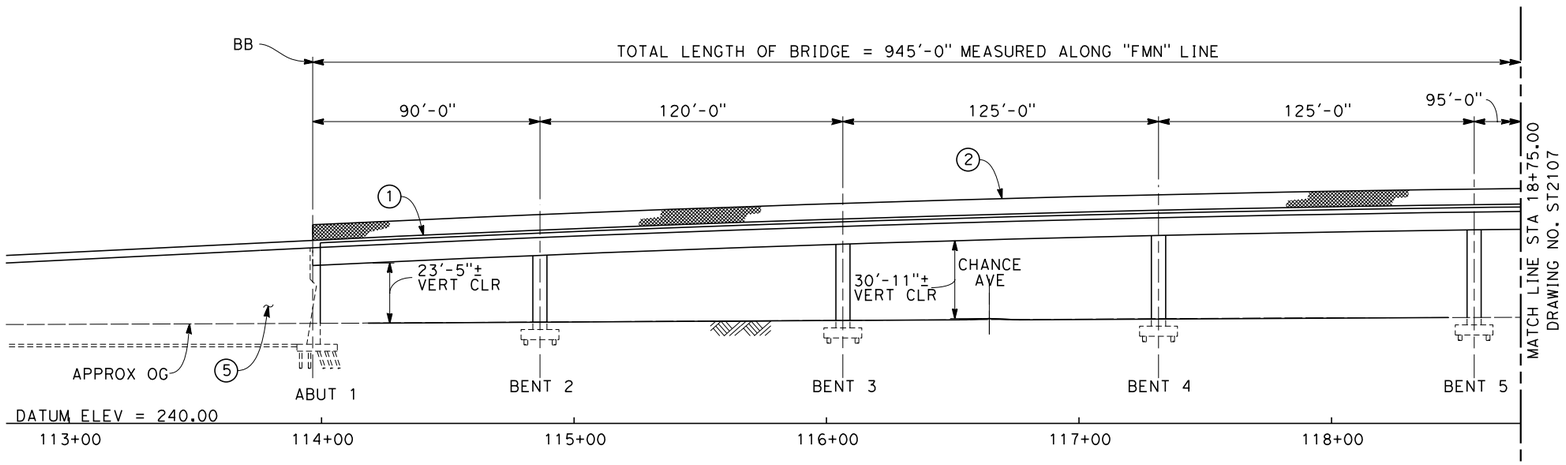


## ELEVATION
SCALE: 1"=30'

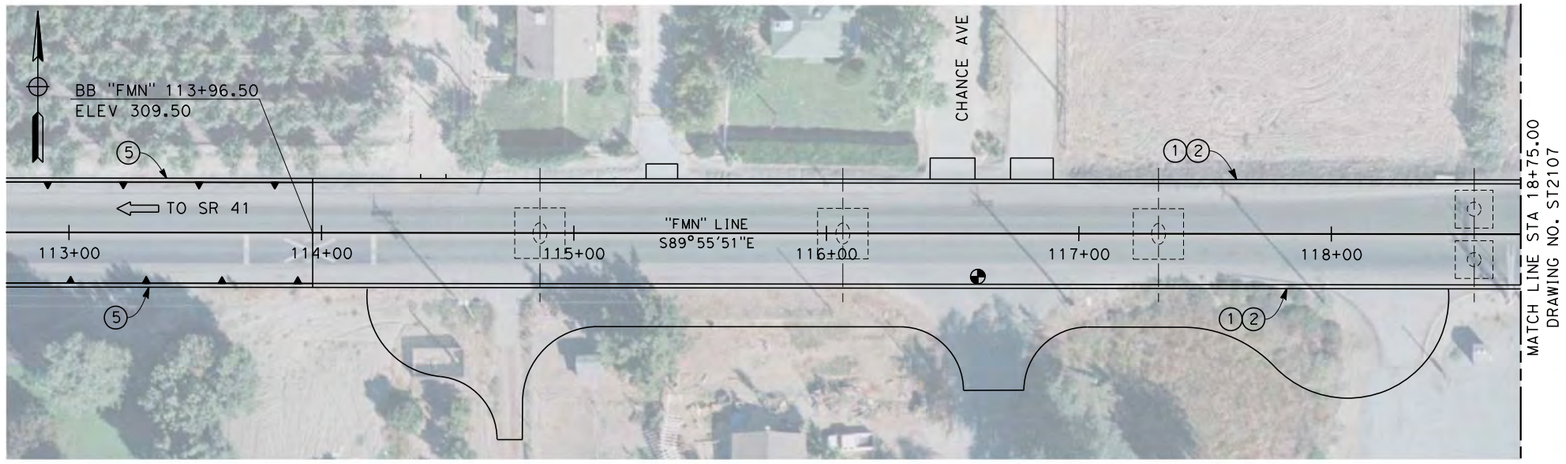


## PLAN
SCALE: 1"=30'

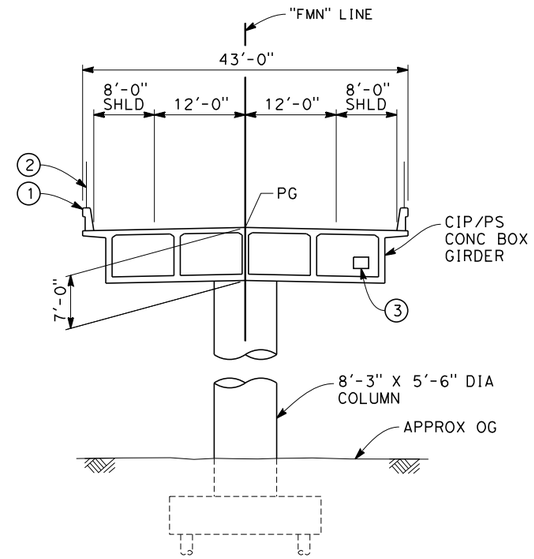


(BENT 2 - 4)

## TYPICAL SECTION
SCALE: 1"=10'

NOTES:
1. ALL PILES NOT SHOWN
2. FOR MINIMUM VERTICAL CLEARANCES, HORIZONTAL CURVE DATA, AND DETAILS NOT SHOWN, SEE ROADWAY PLANS.

LEGEND:

(1) CONCRETE BARRIER WITH AR FENCE
(2) AR FENCE WITH SOLID PLATE OVER HST
(3) FUTURE UTILITY ENCASEMENT OPENING
(4) MBGR
(5) RETAINING WALL WITH BARRIER

10 0 10 20 — 1"=10'
30 0 30 60 — 1"=30'

04/02/2014 - RFP No.: HSR 13-57

| REV | DATE | BY | CHK | APP | DESCRIPTION |
|---|---|---|---|---|---|

DESIGNED BY L. SMITH
DRAWN BY T. PRETZER
CHECKED BY E. MORAN
IN CHARGE R. COFFIN
DATE 12/31/13

**RECORD SET 15% DESIGN SUBMISSION - NOT FOR CONSTRUCTION**

URS | HMM | ARUP
CALIFORNIA HIGH-SPEED TRAIN

CALIFORNIA HIGH-SPEED RAIL AUTHORITY

**CALIFORNIA HIGH-SPEED TRAIN PROJECT**
**FRESNO TO BAKERSFIELD**
MONMOUTH SUBSECTION
ALIGNMENT M
OVERHEAD PLANNING STUDY
E MANNING AVE

CONTRACT NO. HSR 06-0003
DRAWING NO. ST2106
SCALE AS SHOWN
SHEET NO. 5 OF 9

PRE45072 12/24/2013 9:29:20 AM c:\pwworking\hmm\external\pre45072\dms91110\FB-ST-2106-M.dgn

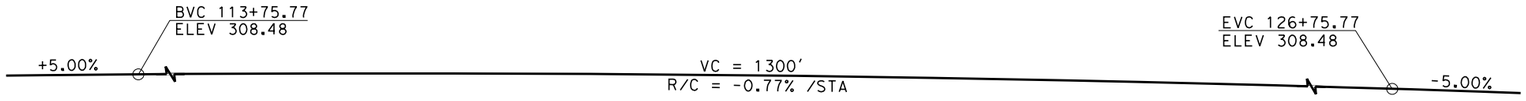


## PROFILE GRADE
NO SCALE

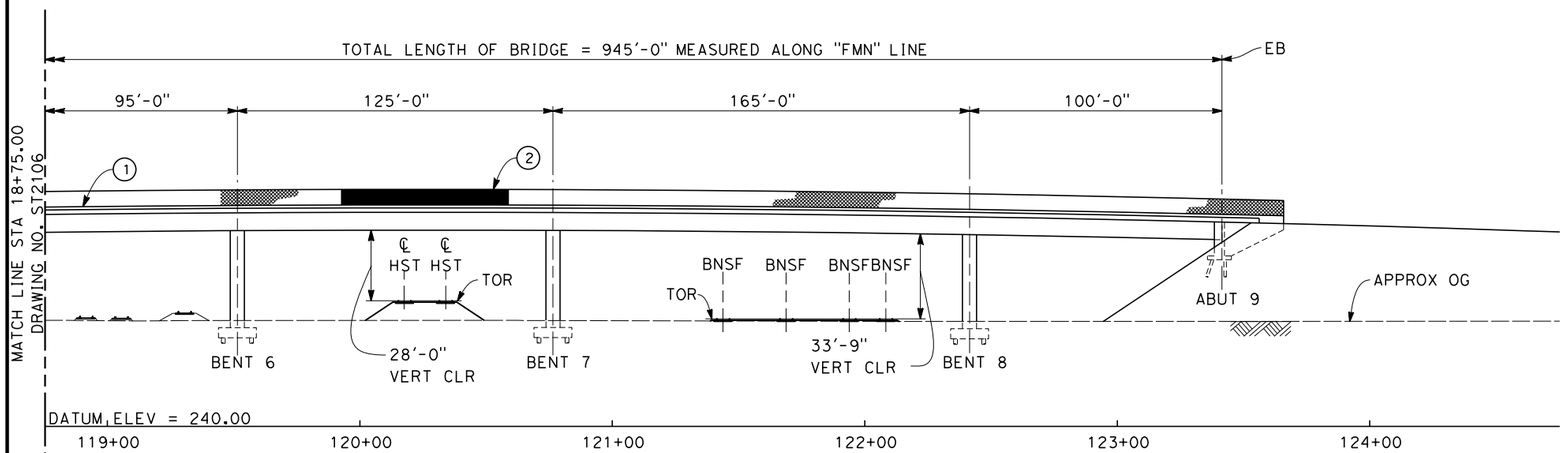


## ELEVATION
SCALE: 1"=30'

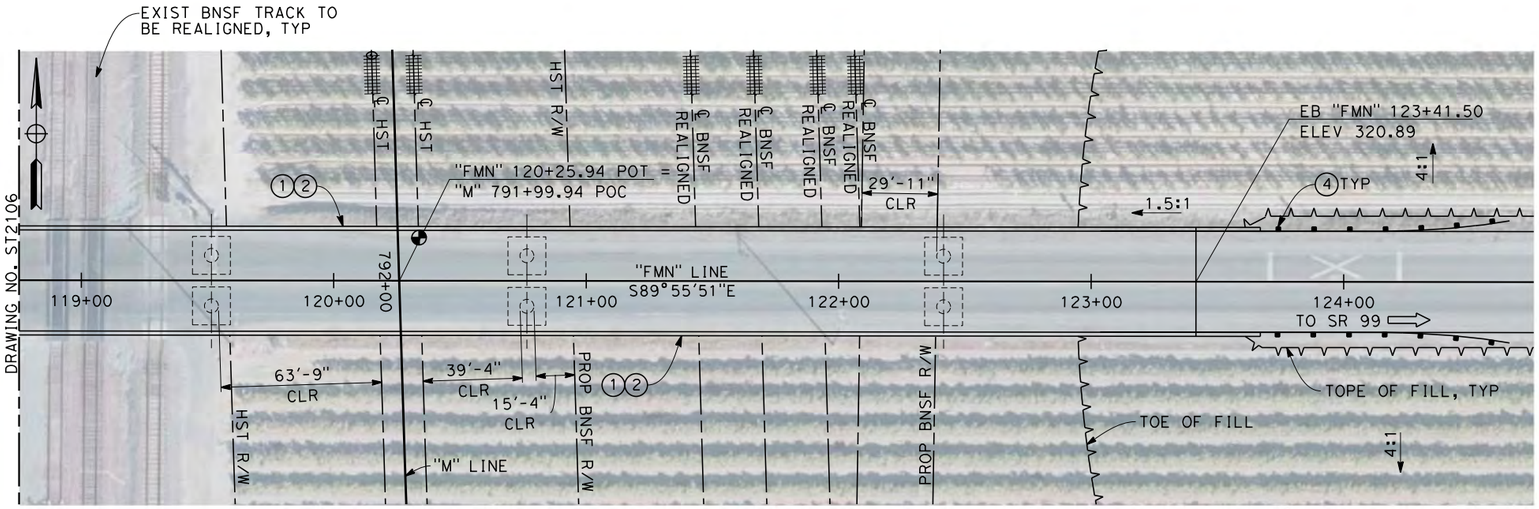


## PLAN
SCALE: 1"=30'

NOTE:
FOR NOTES AND LEGEND
SEE SHEET ST2106

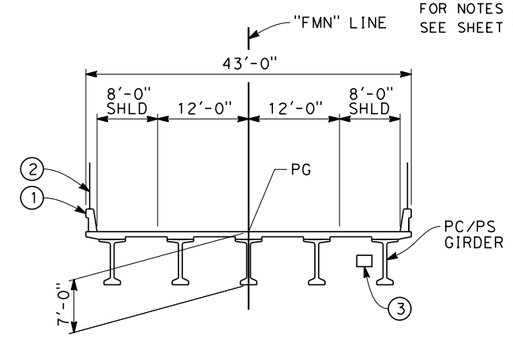


SECTION OVER BNSF

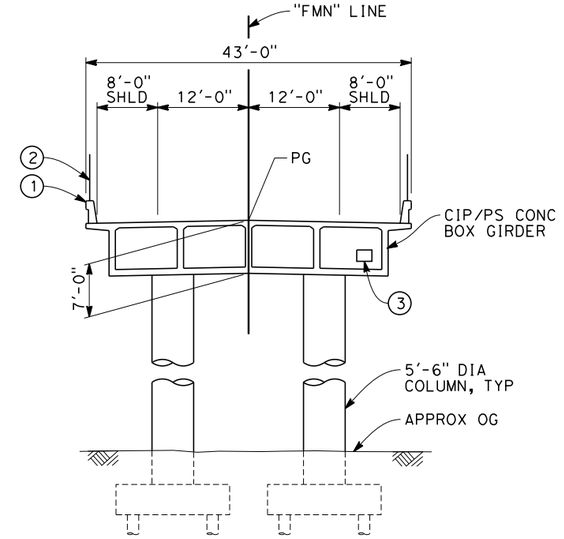


(BENT 5 - 8)

## TYPICAL SECTION
SCALE: 1"=10'

10 0 10 20 — 1"=10'

30 0 30 60 — 1"=30'

04/02/2014 - RFP No.: HSR 13-57

12/24/2013 10:10:31 AM c:\pwworking\hmm\external\pre45072\dms91110\FB-ST-2107-M.dgn

PRE45072

| REV | DATE | BY | CHK | APP | DESCRIPTION |
|---|---|---|---|---|---|

DESIGNED BY L. SMITH
DRAWN BY T. PRETZER
CHECKED BY E. MORAN
IN CHARGE R. COFFIN
DATE 12/31/13

**RECORD SET 15% DESIGN SUBMISSION - NOT FOR CONSTRUCTION**

URS | HMM | ARUP
California High-Speed Train

CALIFORNIA HIGH-SPEED RAIL AUTHORITY

**CALIFORNIA HIGH-SPEED TRAIN PROJECT**
**FRESNO TO BAKERSFIELD**
MONMOUTH SUBSECTION
ALIGNMENT M
OVERHEAD PLANNING STUDY
E MANNING AVE

CONTRACT NO. HSR 06-0003
DRAWING NO. ST2107
SCALE AS SHOWN
SHEET NO. 6 OF 9

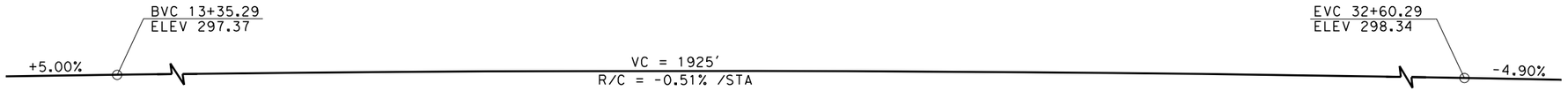


## PROFILE GRADE
NO SCALE

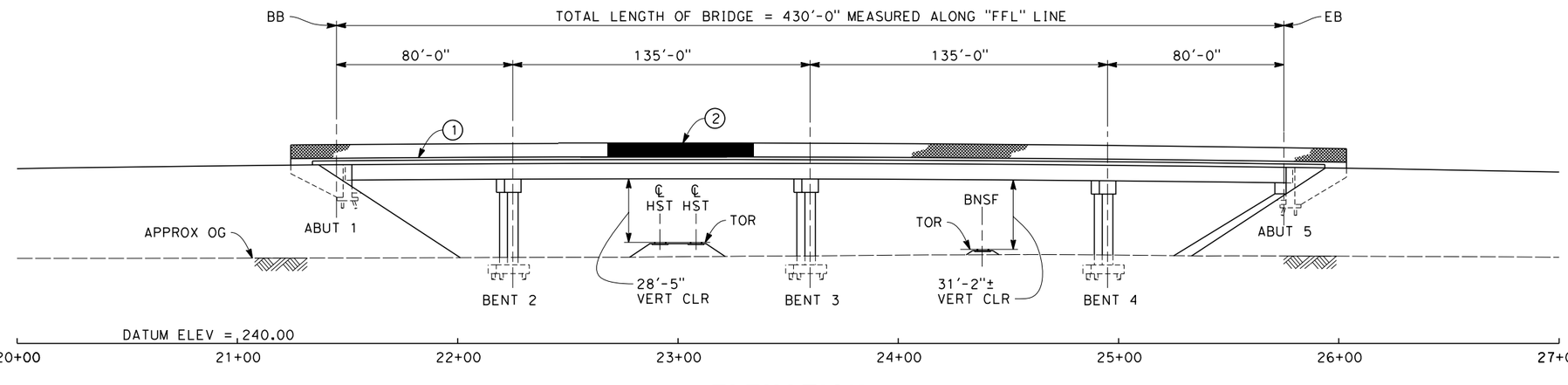


## ELEVATION
SCALE: 1"=30'

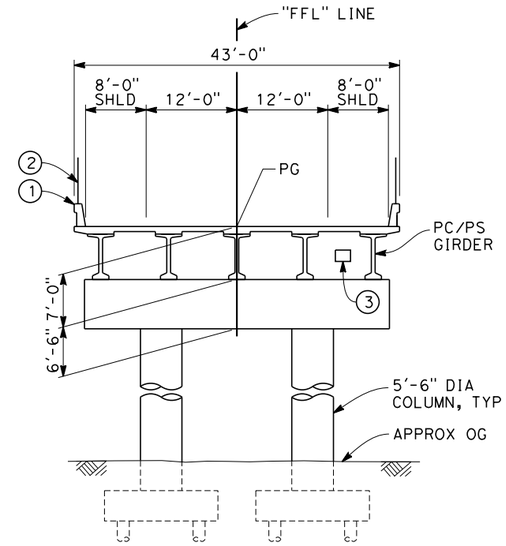


## TYPICAL SECTION
SCALE: 1"=10'

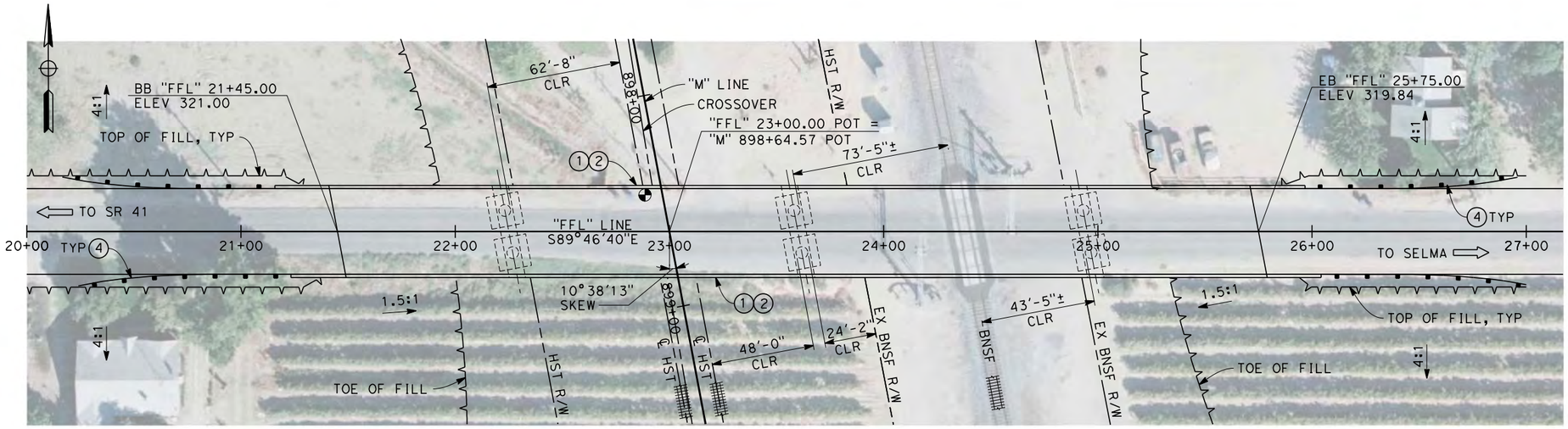


## PLAN
SCALE: 1"=30'

NOTES:
1. ALL PILES NOT SHOWN
2. FOR MINIMUM VERTICAL CLEARANCES, HORIZONTAL CURVE DATA, AND DETAILS NOT SHOWN, SEE ROADWAY PLANS.

LEGEND:
1. CONCRETE BARRIER WITH AR FENCE
2. AR FENCE WITH SOLID PLATE OVER HST
3. FUTURE UTILITY ENCASEMENT OPENING
4. MBGR

10 0 10 20 — 1"=10'

30 0 30 60 — 1"=30'

| REV | DATE | BY | CHK | APP | DESCRIPTION |
|---|---|---|---|---|---|
| | | | | | |

DESIGNED BY L. SMITH
DRAWN BY T. PRETZER
CHECKED BY E. MORAN
IN CHARGE R. COFFIN
DATE 12/31/13

**RECORD SET 15% DESIGN SUBMISSION - NOT FOR CONSTRUCTION**

URS | HMM | ARUP
CALIFORNIA HIGH-SPEED TRAIN

CALIFORNIA HIGH-SPEED RAIL AUTHORITY

**CALIFORNIA HIGH-SPEED TRAIN PROJECT**
**FRESNO TO BAKERSFIELD**
MONMOUTH SUBSECTION
ALIGNMENT M
OVERHEAD PLANNING STUDY
E FLORAL AVE

CONTRACT NO. HSR 06-0003
DRAWING NO. ST2109
SCALE AS SHOWN
SHEET NO. 7 OF 9

04/02/2014 - RFP No.: HSR 13-57

12/24/2013 9:25:28 AM c:\pwworking\hmm\external\pre45072\dms91110\FB-ST-2109-M.dgn

PRE45072

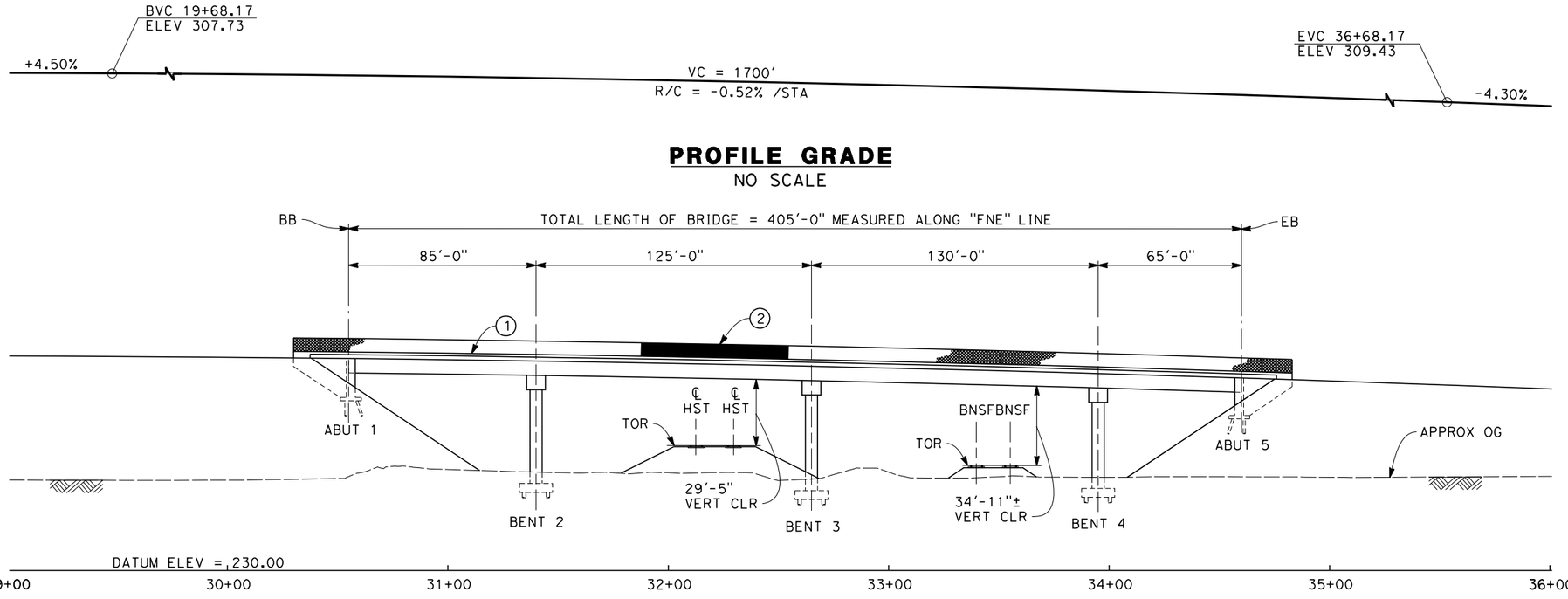


## PROFILE GRADE
NO SCALE

## ELEVATION
SCALE: 1"=30'

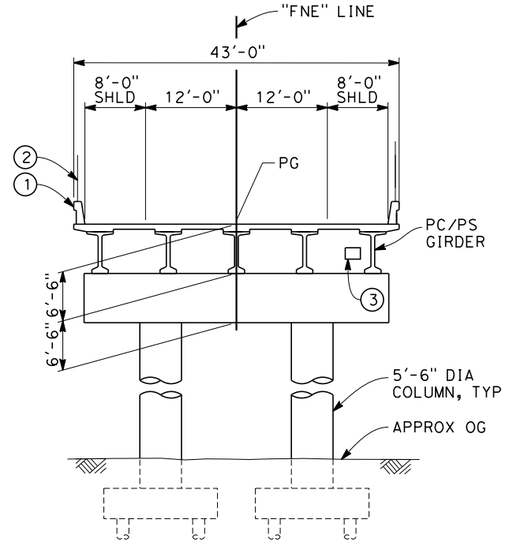


## TYPICAL SECTION
SCALE: 1"=10'

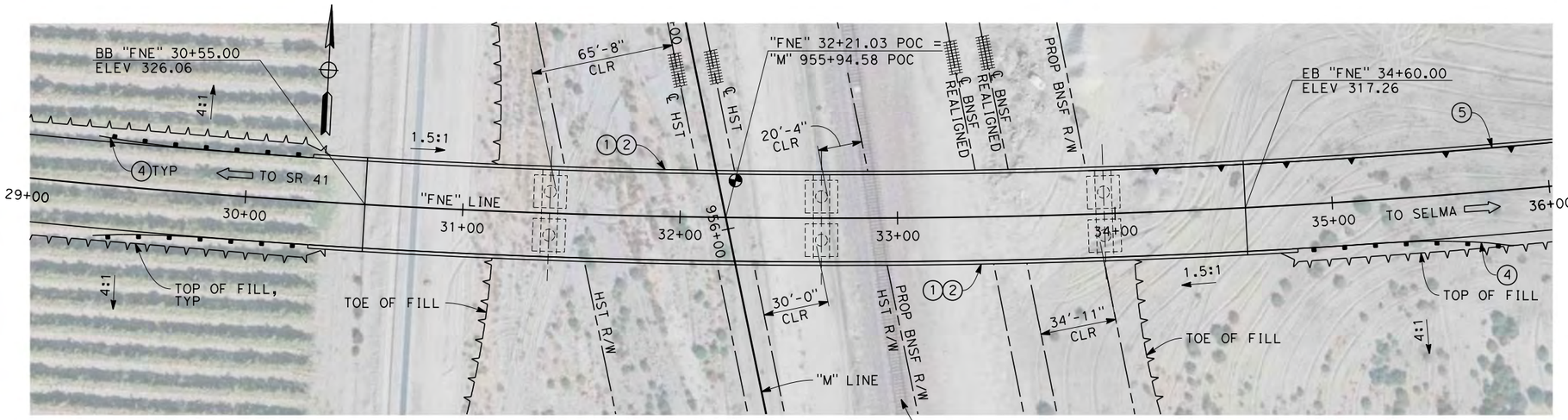


## PLAN
SCALE: 1"=30'

NOTES:
1. ALL PILES NOT SHOWN
2. FOR MINIMUM VERTICAL CLEARANCES, HORIZONTAL CURVE DATA, AND DETAILS NOT SHOWN, SEE ROADWAY PLANS.

LEGEND:
1. CONCRETE BARRIER WITH AR FENCE
2. AR FENCE WITH SOLID PLATE OVER HST
3. FUTURE UTILITY ENCASEMENT OPENING
4. MBGR
5. RETAINING WALL

10 0 10 20 — 1"=10'
30 0 30 60 — 1"=30'

04/02/2014 - RFP No.: HSR 13-57

| REV | DATE | BY | CHK | APP | DESCRIPTION |
|---|---|---|---|---|---|

DESIGNED BY L. SMITH
DRAWN BY T. PRETZER
CHECKED BY E. MORAN
IN CHARGE R. COFFIN
DATE 12/31/13

RECORD SET 15% DESIGN SUBMISSION - NOT FOR CONSTRUCTION

URS | HMM | ARUP
CALIFORNIA HIGH-SPEED TRAIN

CALIFORNIA HIGH-SPEED RAIL AUTHORITY

**CALIFORNIA HIGH-SPEED TRAIN PROJECT**
**FRESNO TO BAKERSFIELD**
MONMOUTH SUBSECTION
ALIGNMENT M
OVERHEAD PLANNING STUDY
E NEBRASKA AVE

CONTRACT NO. HSR 06-0003
DRAWING NO. ST2111
SCALE AS SHOWN
SHEET NO. 8 OF 9

PRE45072 12/24/2013 9:05:27 AM c:\pwworking\hmm\external\pre45072\dms91110\FB-ST-2111-M.dgn

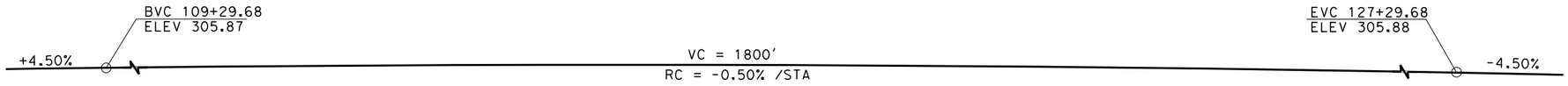


## PROFILE GRADE
NO SCALE

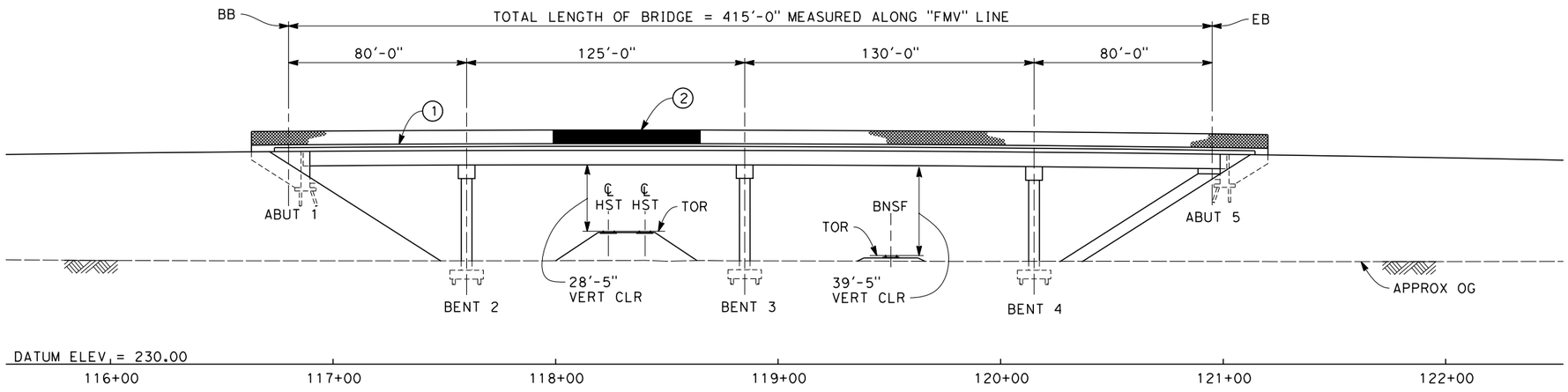


## ELEVATION
SCALE: 1"=30'

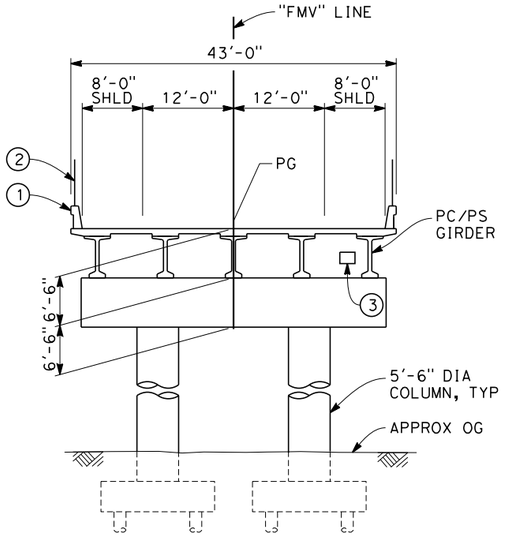


## TYPICAL SECTION
SCALE: 1"=10'

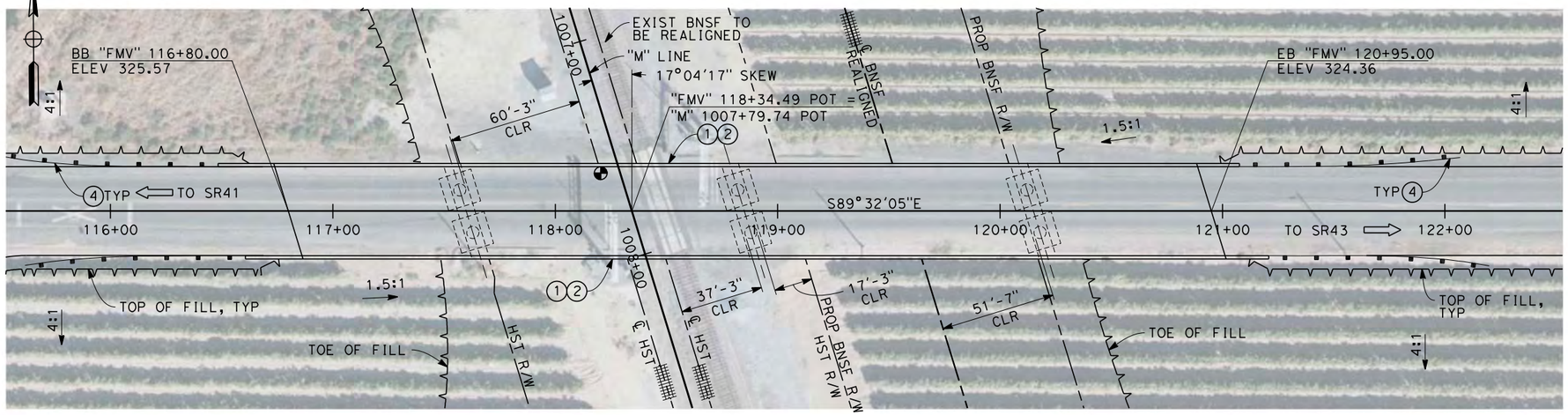


## PLAN
SCALE: 1"=30'

NOTES:
1. ALL PILES NOT SHOWN
2. FOR MINIMUM VERTICAL CLEARANCES, HORIZONTAL CURVE DATA, AND DETAILS NOT SHOWN, SEE ROADWAY PLANS.

LEGEND:
1. CONCRETE BARRIER WITH AR FENCE
2. AR FENCE WITH SOLID PLATE OVER HST
3. FUTURE UTILITY ENCASEMENT OPENING
4. MBGR

10 0 10 20 — 1"=10'

30 0 30 60 — 1"=30'

04/02/2014 - RFP No.: HSR 13-57

| REV | DATE | BY | CHK | APP | DESCRIPTION |
|---|---|---|---|---|---|

DESIGNED BY L. SMITH
DRAWN BY T. PRETZER
CHECKED BY E. MORAN
IN CHARGE R. COFFIN
DATE 12/31/13

**RECORD SET 15% DESIGN SUBMISSION - NOT FOR CONSTRUCTION**

URS | HMM | ARUP
CALIFORNIA HIGH-SPEED TRAIN

CALIFORNIA HIGH-SPEED RAIL AUTHORITY

**CALIFORNIA HIGH-SPEED TRAIN PROJECT**
**FRESNO TO BAKERSFIELD**
MONMOUTH SUBSECTION
ALIGNMENT M
OVERHEAD PLANNING STUDY
E MOUNTAIN VIEW AVE

CONTRACT NO. HSR 06-0003
DRAWING NO. ST2113
SCALE AS SHOWN
SHEET NO. 9 OF 9

PRE45072 12/24/2013 9:32:45 AM c:\pwworking\hmm\external\pre45072\dms91110\FB-ST-2113-M.dgn

| REV | DATE | BY | CHK | APP | DESCRIPTION |
|---|---|---|---|---|---|
| | | | | | |

DESIGNED BY: B. LUSCOMBE
DRAWN BY: D. BARNHART
CHECKED BY: M. ANDREWS
IN CHARGE: R. COFFIN
DATE: 12/31/13

**RECORD SET 15% DESIGN SUBMISSION - NOT FOR CONSTRUCTION**

URS | HMM | ARUP
CALIFORNIA HIGH-SPEED TRAIN

CALIFORNIA HIGH-SPEED RAIL AUTHORITY

# CALIFORNIA HIGH-SPEED TRAIN PROJECT
## FRESNO TO BAKERSFIELD
HANFORD SUBSECTION
ALIGNMENT H
OVERHEAD PLANNING STUDY
KEY MAP

CONTRACT NO. HSR 06-0003
DRAWING NO. SB0050
SCALE AS SHOWN
SHEET NO. 1 OF 14

04/02/2014 - RFP No.: HSR 13-57

12/27/2013 11:22:14 AM c:\pwworking\hmm\external\bar59603\dms91106\FB-SB-0050-H.dgn
BAR59603

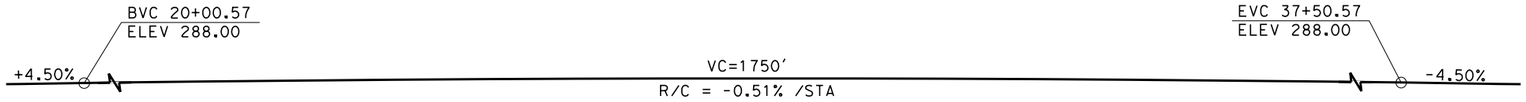


## PROFILE GRADE
NO SCALE

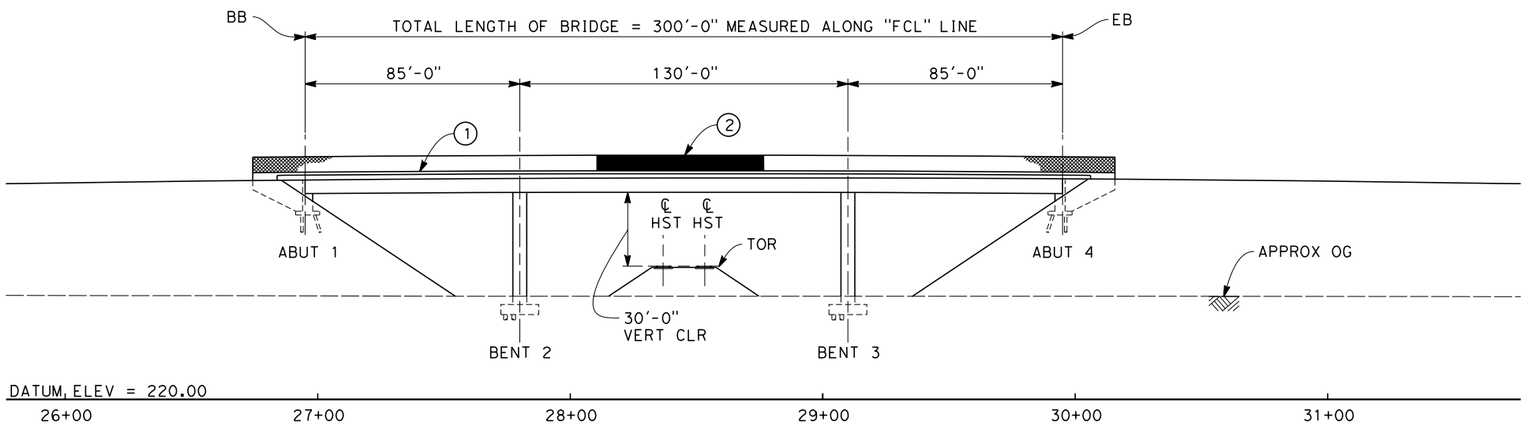


## ELEVATION
SCALE: 1"=30'

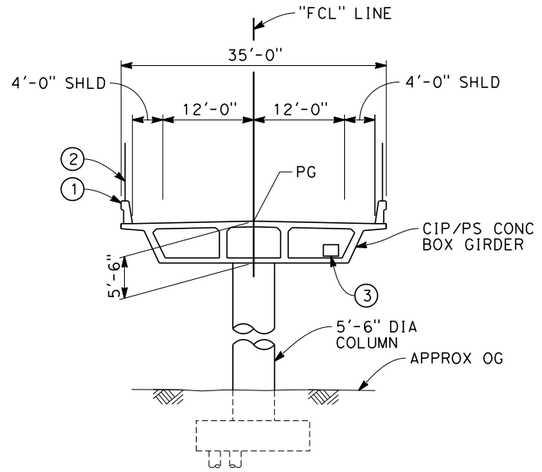


## TYPICAL SECTION
SCALE: 1"=10'

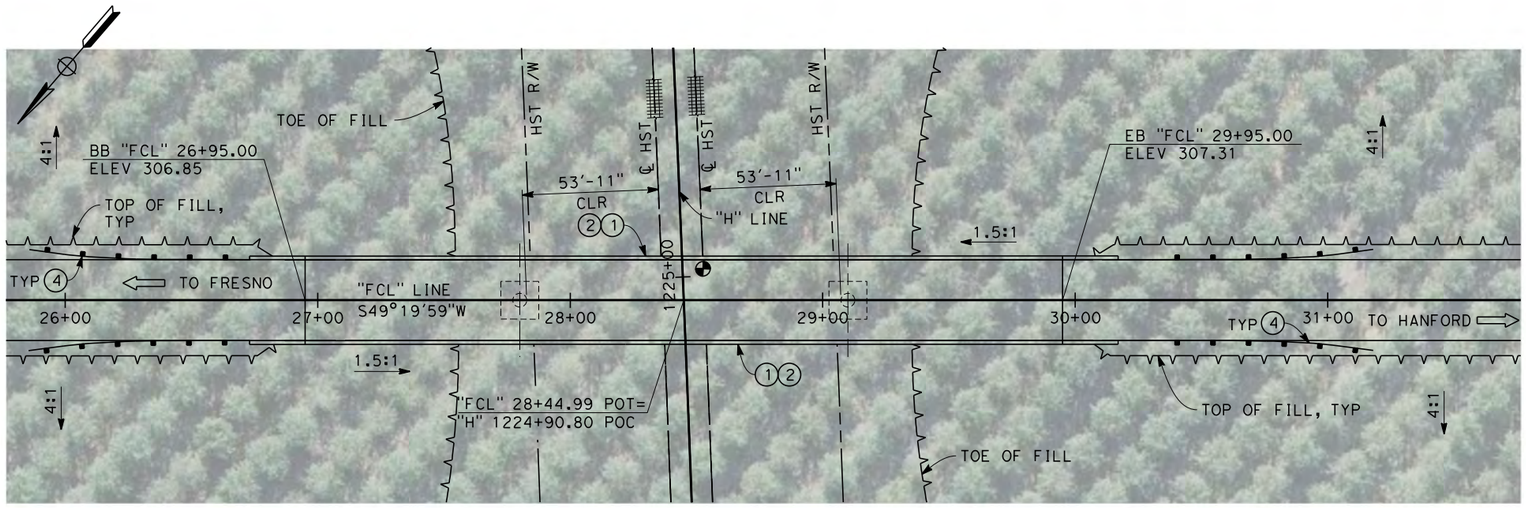


## PLAN
SCALE: 1"=30'

NOTES:

1. ALL PILES NOT SHOWN
2. FOR MINIMUM VERTICAL CLEARANCES, HORIZONTAL CURVE DATA, AND DETAILS NOT SHOWN, SEE ROADWAY PLANS.

LEGEND:

(1) CONCRETE BARRIER WITH AR FENCE

(2) AR FENCE WITH SOLID PLATE OVER HST

(3) FUTURE UTILITY ENCASEMENT OPENING

(4) MBGR

10 0 10 20 — 1"=10'

30 0 30 60 — 1"=30'

04/02/2014 - RFP No.: HSR 13-57

| REV | DATE | BY | CHK | APP | DESCRIPTION |
|---|---|---|---|---|---|

DESIGNED BY B. LUSCOMBE
DRAWN BY D. BARNHART
CHECKED BY M. ANDREWS
IN CHARGE R. COFFIN
DATE 12/31/13

RECORD SET 15% DESIGN SUBMISSION - NOT FOR CONSTRUCTION

URS | HMM | ARUP
CALIFORNIA HIGH-SPEED TRAIN

CALIFORNIA HIGH-SPEED RAIL AUTHORITY

**CALIFORNIA HIGH-SPEED TRAIN PROJECT**
**FRESNO TO BAKERSFIELD**
HANFORD SUBSECTION
ALIGNMENT H
OVERHEAD PLANNING STUDY
S CLOVIS AVE

CONTRACT NO. HSR 06-0003
DRAWING NO. ST2117
SCALE AS SHOWN
SHEET NO. 2 OF 14

12/26/2013 4:36:31 PM c:\pwworking\hmm\external\pre45072\dms91106\FB-ST-2117-H.dgn
PRE45072

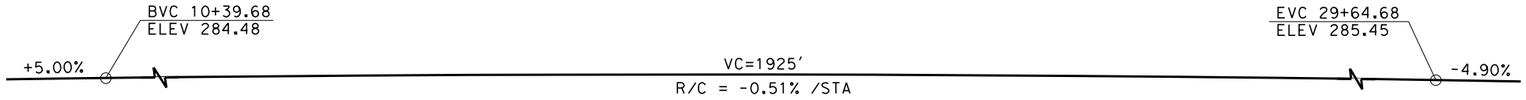


## PROFILE GRADE
NO SCALE

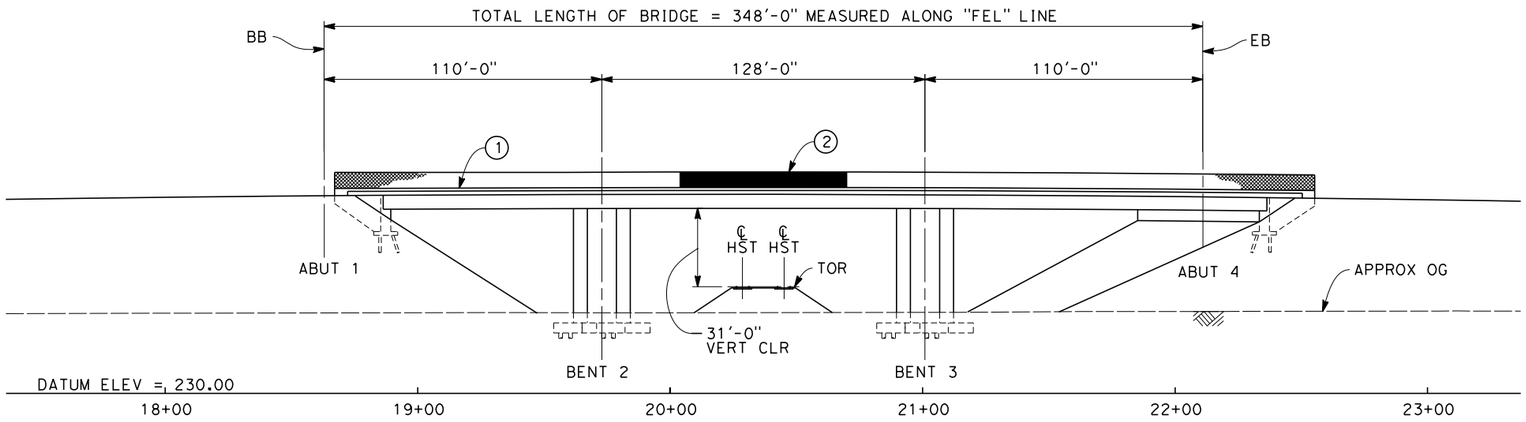


## ELEVATION
SCALE: 1"=30'

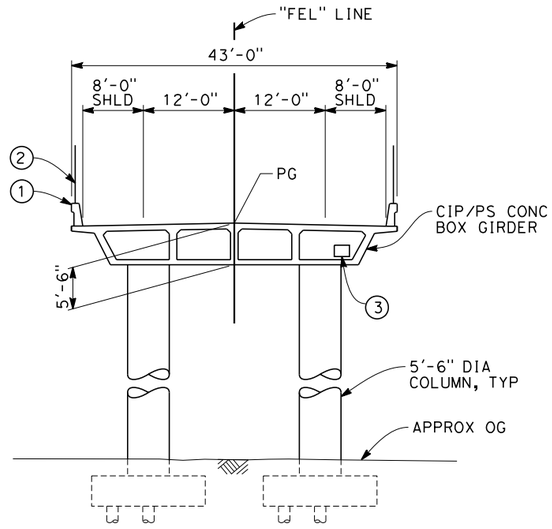


## TYPICAL SECTION
SCALE: 1"=10'

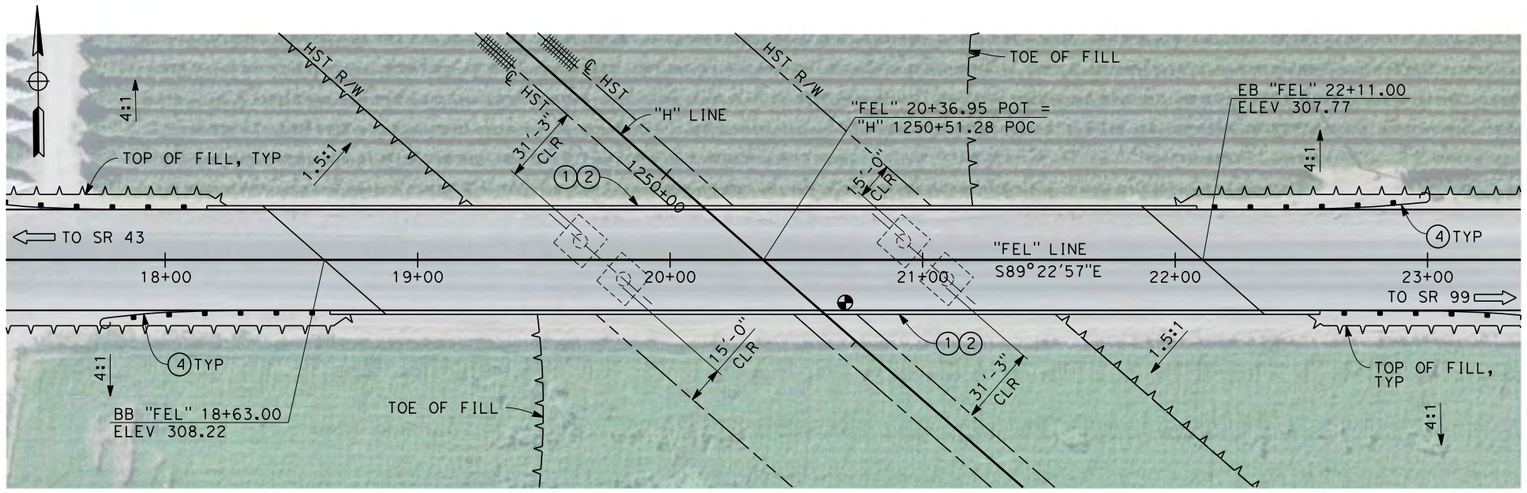


## PLAN
SCALE: 1"=30'

NOTES:

1. ALL PILES NOT SHOWN
2. FOR MINIMUM VERTICAL CLEARANCES, HORIZONTAL CURVE DATA, AND DETAILS NOT SHOWN, SEE ROADWAY PLANS.

LEGEND:

(1) CONCRETE BARRIER WITH AR FENCE
(2) AR FENCE WITH SOLID PLATE OVER HST
(3) FUTURE UTILITY ENCASEMENT OPENING
(4) MBGR

10 0 10 20 — 1"=10'
30 0 30 60 — 1"=30'

04/02/2014 - RFP No.: HSR 13-57

| REV | DATE | BY | CHK | APP | DESCRIPTION |
|---|---|---|---|---|---|

DESIGNED BY B. LUSCOMBE
DRAWN BY D. BARNHART
CHECKED BY M. ANDREWS
IN CHARGE R. COFFIN
DATE 12/31/13

**RECORD SET 15% DESIGN SUBMISSION - NOT FOR CONSTRUCTION**

URS | HMM | ARUP
CALIFORNIA HIGH-SPEED TRAIN

CALIFORNIA HIGH-SPEED RAIL AUTHORITY

**CALIFORNIA HIGH-SPEED TRAIN PROJECT**
**FRESNO TO BAKERSFIELD**
HANFORD SUBSECTION
ALIGNMENT H
OVERHEAD PLANNING STUDY
E ELKHORN AVE

CONTRACT NO. HSR 06-0003
DRAWING NO. ST2119
SCALE AS SHOWN
SHEET NO. 3 OF 14

12/26/2013 4:47:49 PM c:\pwworking\hmm\external\pre45072\dms91106\FB-ST-2119-H.dgn
PRE45072

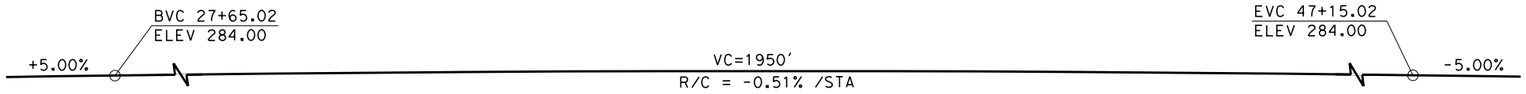


## PROFILE GRADE
NO SCALE

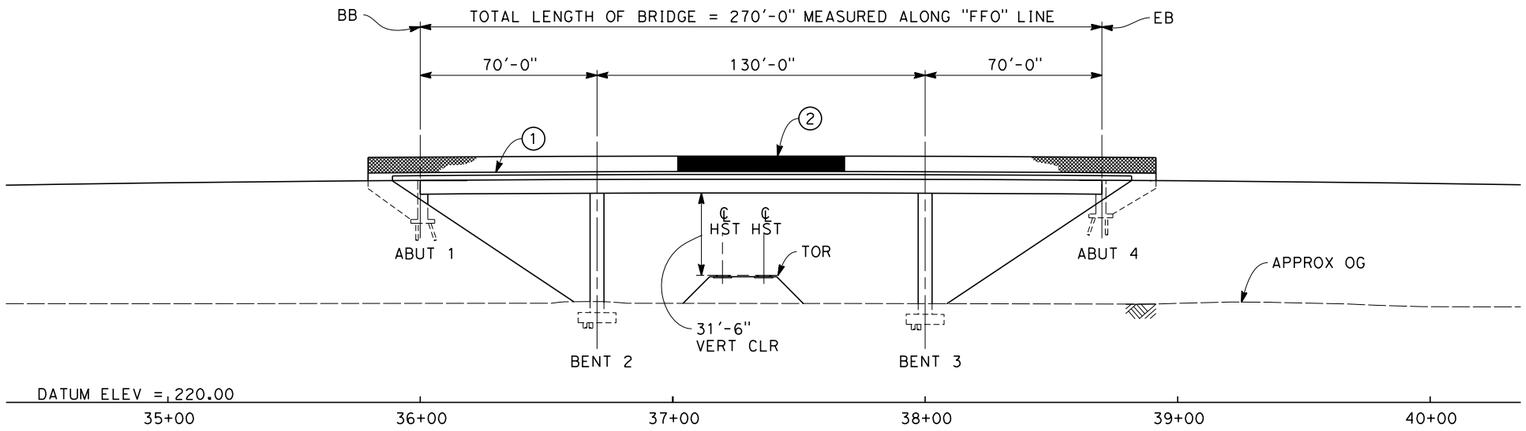


## ELEVATION
SCALE: 1"=30'

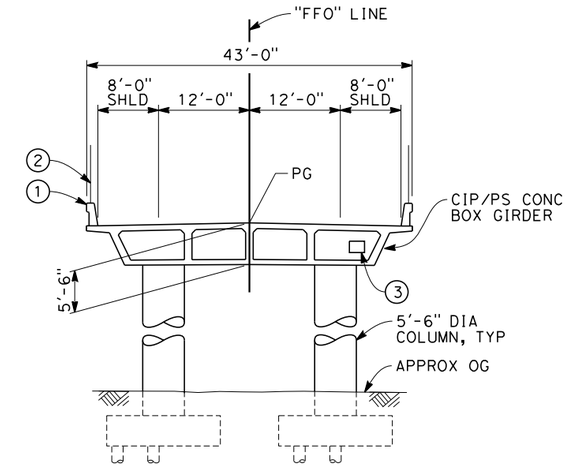


## TYPICAL SECTION
SCALE: 1"=10'

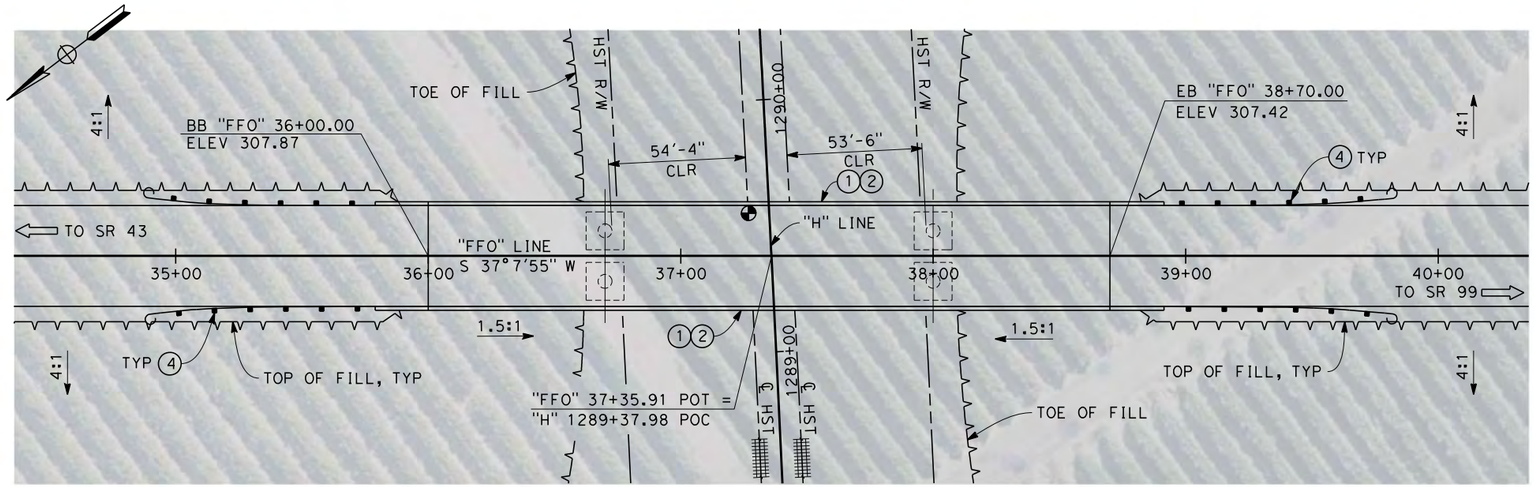


## PLAN
SCALE: 1"=30'

NOTES:

1. ALL PILES NOT SHOWN
2. FOR MINIMUM VERTICAL CLEARANCES, HORIZONTAL CURVE DATA, AND DETAILS NOT SHOWN, SEE ROADWAY PLANS.

LEGEND:

(1) CONCRETE BARRIER WITH AR FENCE
(2) AR FENCE WITH SOLID PLATE OVER HST
(3) FUTURE UTILITY ENCASEMENT OPENING
(4) MBGR

10 0 10 20 — 1"=10'
30 0 30 60 — 1"=30'

04/02/2014 - RFP No.: HSR 13-57

| REV | DATE | BY | CHK | APP | DESCRIPTION |
|---|---|---|---|---|---|

DESIGNED BY B. LUSCOMBE
DRAWN BY D. BARNHART
CHECKED BY M. ANDREWS
IN CHARGE R. COFFIN
DATE 12/31/13

**RECORD SET 15% DESIGN SUBMISSION - NOT FOR CONSTRUCTION**

URS | HMM | ARUP
CALIFORNIA HIGH-SPEED TRAIN

CALIFORNIA HIGH-SPEED RAIL AUTHORITY

**CALIFORNIA HIGH-SPEED TRAIN PROJECT**
**FRESNO TO BAKERSFIELD**
HANFORD SUBSECTION
ALIGNMENT H
OVERHEAD PLANNING STUDY
S FOWLER AVE

CONTRACT NO. HSR 06-0003
DRAWING NO. ST2121
SCALE AS SHOWN
SHEET NO. 4 OF 14

PRE45072 12/27/2013 7:46:49 AM c:\pwworking\hmm\external\pre45072\dms91106\FB-ST-2121-H.dgn

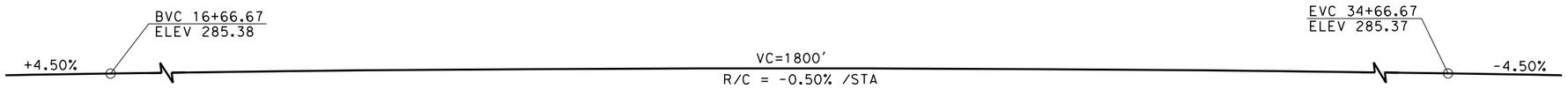


## PROFILE GRADE
NO SCALE

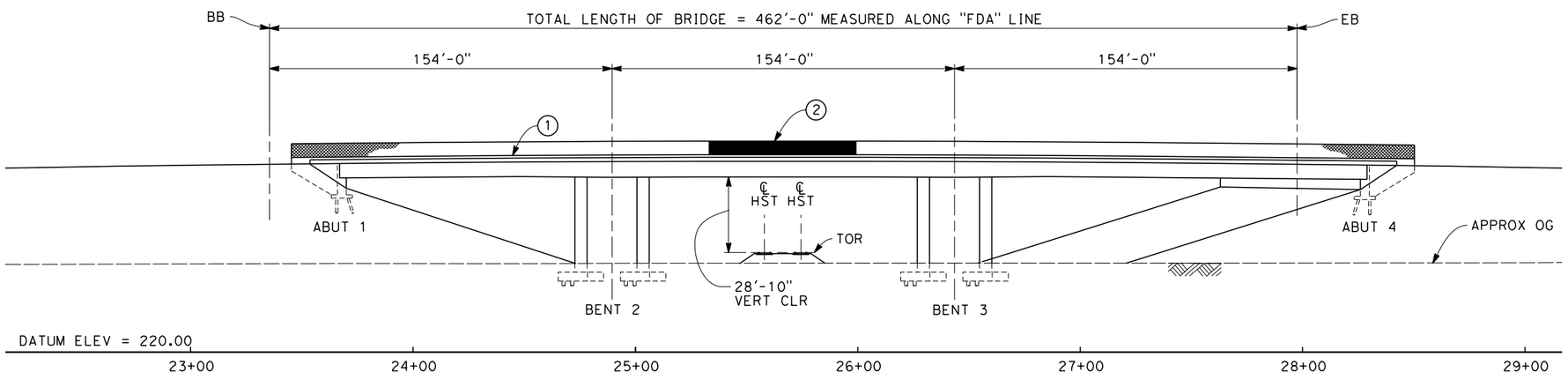


## ELEVATION
SCALE: 1"=30'

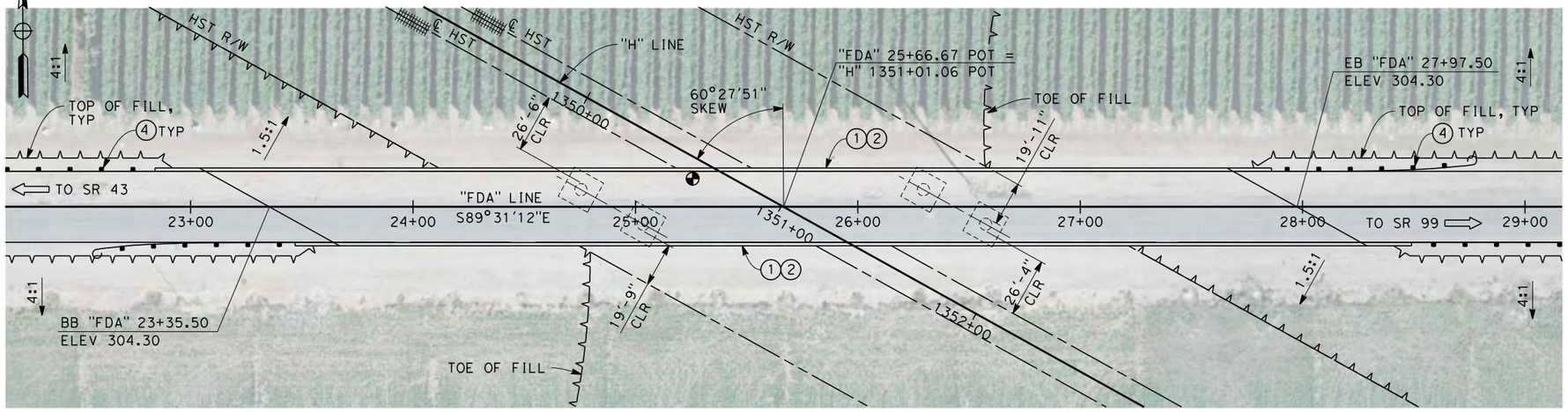


## PLAN
SCALE: 1"=30'

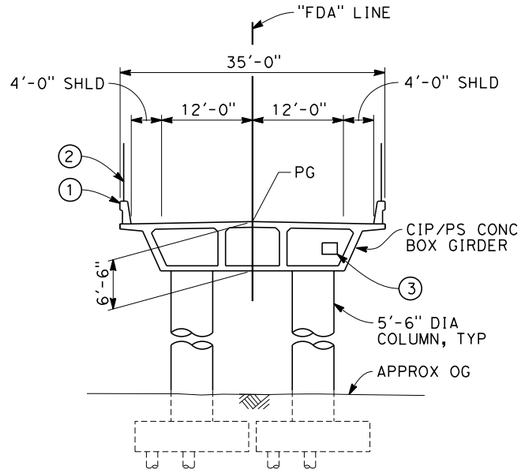


## TYPICAL SECTION
SCALE: 1"=10'

NOTES:

1. ALL PILES NOT SHOWN
2. FOR MINIMUM VERTICAL CLEARANCES, HORIZONTAL CURVE DATA, AND DETAILS NOT SHOWN, SEE ROADWAY PLANS.

LEGEND:

(1) CONCRETE BARRIER WITH AR FENCE

(2) AR FENCE WITH SOLID PLATE OVER HST

(3) FUTURE UTILITY ENCASEMENT OPENING

(4) MBGR

10 0 10 20 — 1"=10'

30 0 30 60 — 1"=30'

04/02/2014 - RFP No.: HSR 13-57

| REV | DATE | BY | CHK | APP | DESCRIPTION |
|---|---|---|---|---|---|

DESIGNED BY B. LUSCOMBE
DRAWN BY D. BARNHART
CHECKED BY M. ANDREWS
IN CHARGE R. COFFIN
DATE 12/31/13

RECORD SET 15% DESIGN SUBMISSION - NOT FOR CONSTRUCTION

URS | HMM | ARUP

CALIFORNIA HIGH-SPEED RAIL AUTHORITY

# CALIFORNIA HIGH-SPEED TRAIN PROJECT
# FRESNO TO BAKERSFIELD
HANFORD SUBSECTION
ALIGNMENT H
OVERHEAD PLANNING STUDY
E DAVIS AVE

CONTRACT NO. HSR 06-0003
DRAWING NO. ST2123
SCALE AS SHOWN
SHEET NO. 5 OF 14

12/27/2013 7:58:00 AM c:\pwworking\hmm\external\pre45072\dms91106\FB-ST-2123-H.dgn
PRE45072

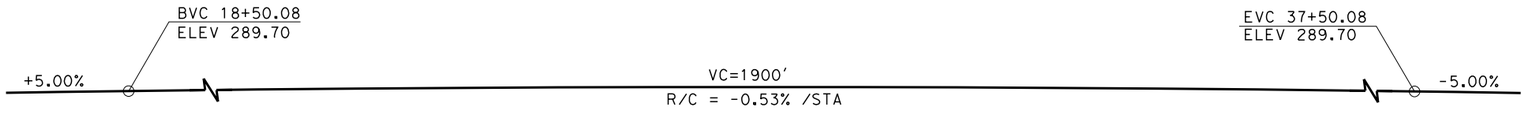


## PROFILE GRADE
NO SCALE

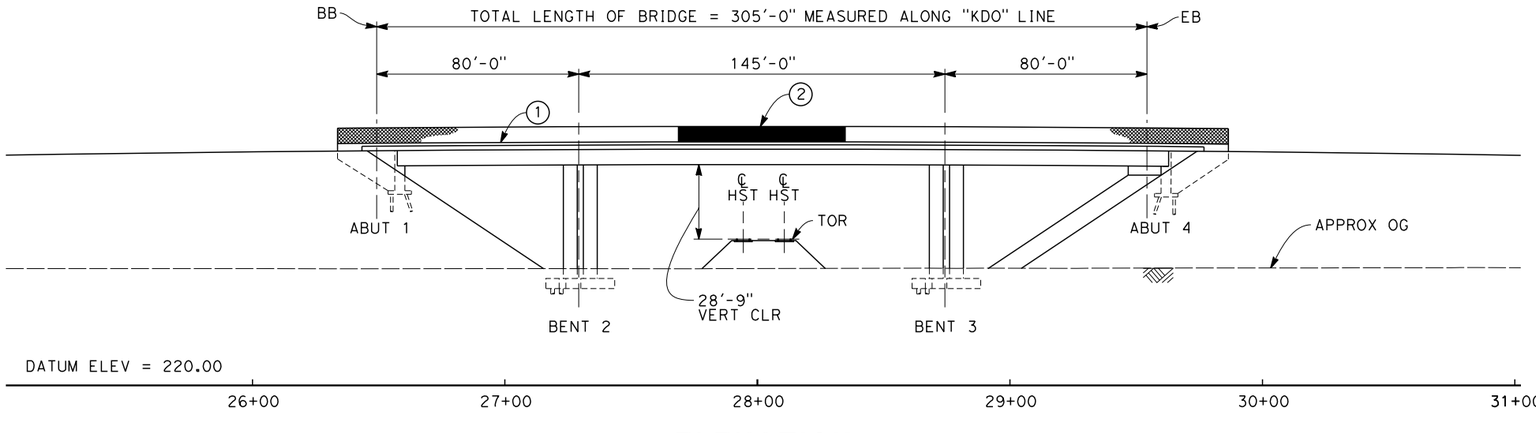


## ELEVATION
SCALE: 1"=30'

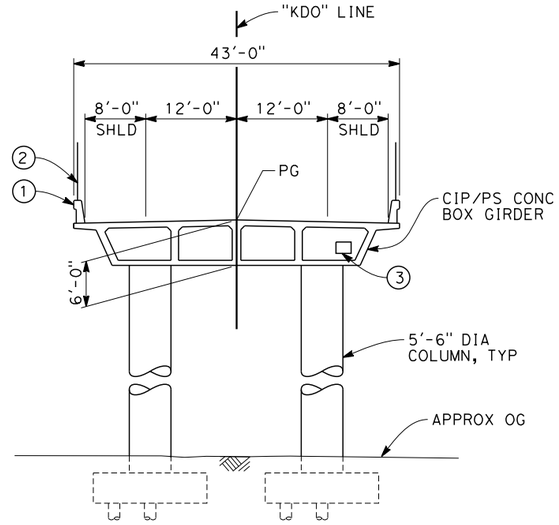


## TYPICAL SECTION
SCALE: 1"=10'

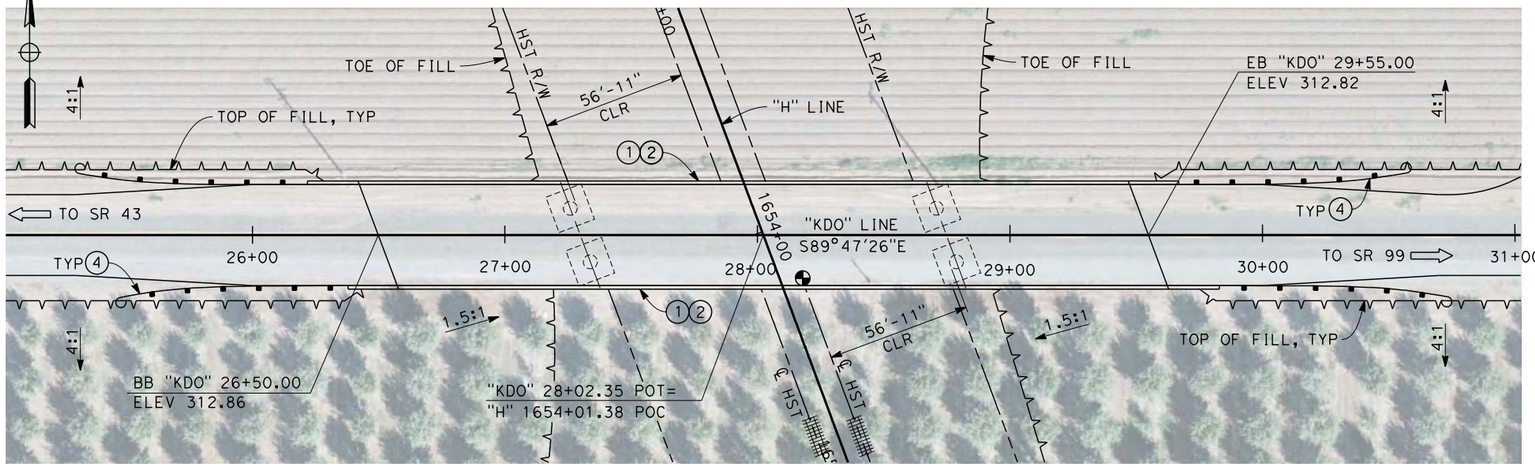


## PLAN
SCALE: 1"=30'

NOTES:

1. ALL PILES NOT SHOWN
2. FOR MINIMUM VERTICAL CLEARANCES, HORIZONTAL CURVE DATA, AND DETAILS NOT SHOWN, SEE ROADWAY PLANS.

LEGEND:

(1) CONCRETE BARRIER WITH AR FENCE

(2) AR FENCE WITH SOLID PLATE OVER HST

(3) FUTURE UTILITY ENCASEMENT OPENING

(4) MBGR

10 0 10 20 — 1"=10'

30 0 30 60 — 1"=30'

04/02/2014 - RFP No.: HSR 13-57

12/27/2013 12:53:00 PM c:\pwworking\hmm\external\us60322\dms91106\FB-ST-2129-H.dgn

LUS60322

| REV | DATE | BY | CHK | APP | DESCRIPTION |
|---|---|---|---|---|---|

DESIGNED BY B. LUSCOMBE
DRAWN BY D. BARNHART
CHECKED BY M. ANDREWS
IN CHARGE R. COFFIN
DATE 12/31/13

**RECORD SET 15% DESIGN SUBMISSION - NOT FOR CONSTRUCTION**

URS | HMM | ARUP
CALIFORNIA HIGH-SPEED TRAIN

CALIFORNIA HIGH-SPEED RAIL AUTHORITY

**CALIFORNIA HIGH-SPEED TRAIN PROJECT**
**FRESNO TO BAKERSFIELD**
HANFORD SUBSECTION
ALIGNMENT H
OVERHEAD PLANNING STUDY
DOVER AVE

CONTRACT NO. HSR 06-0003
DRAWING NO. ST2129
SCALE AS SHOWN
SHEET NO. 6 OF 14

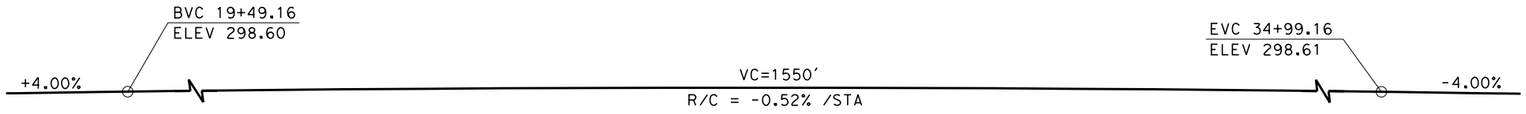


## PROFILE GRADE
NO SCALE

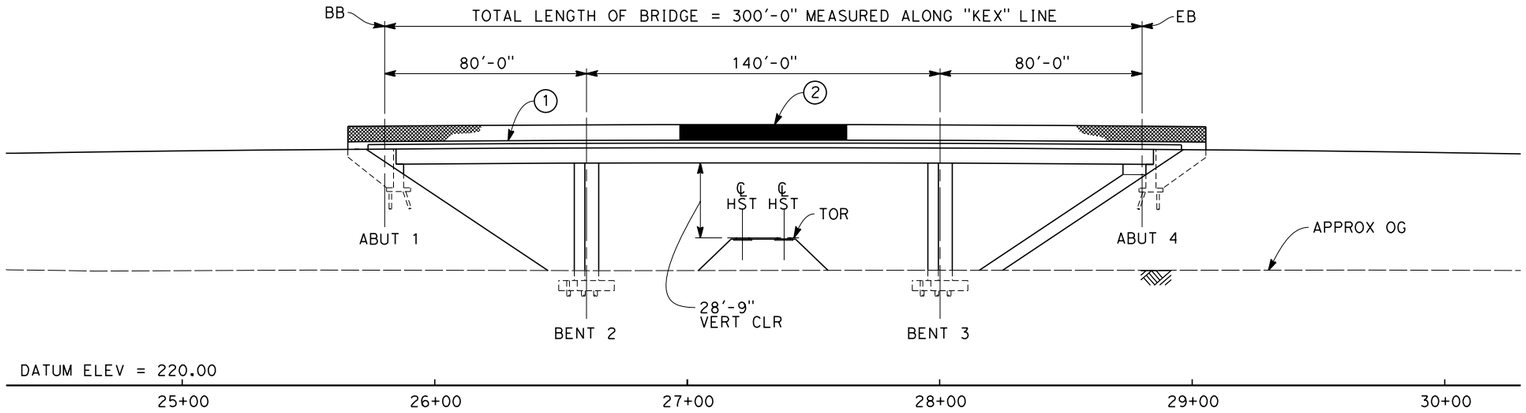


## ELEVATION
SCALE: 1"=30'

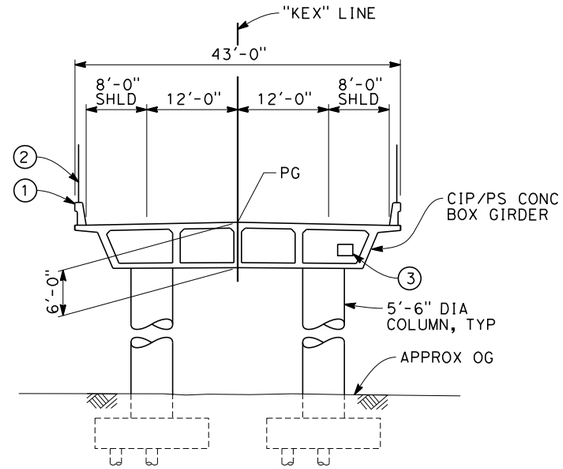


## TYPICAL SECTION
SCALE: 1"=10'

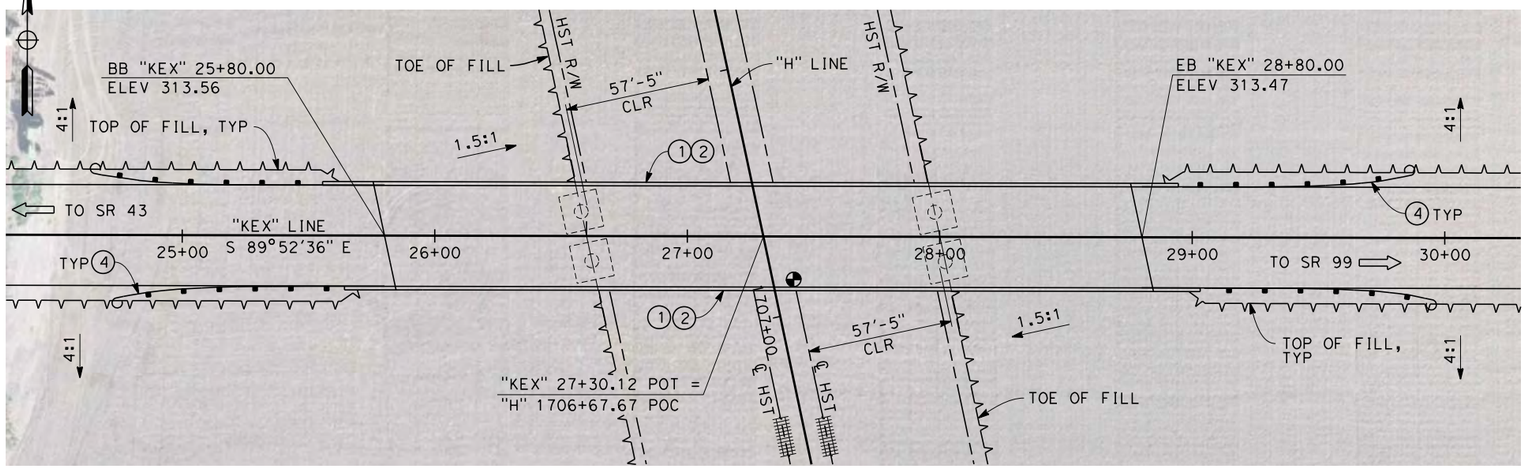


## PLAN
SCALE: 1"=30'

NOTES:

1. ALL PILES NOT SHOWN
2. FOR MINIMUM VERTICAL CLEARANCES, HORIZONTAL CURVE DATA, AND DETAILS NOT SHOWN, SEE ROADWAY PLANS.

LEGEND:

(1) CONCRETE BARRIER WITH AR FENCE

(2) AR FENCE WITH SOLID PLATE OVER HST

(3) FUTURE UTILITY ENCASEMENT OPENING

(4) MBGR

10 0 10 20 — 1"=10'

30 0 30 60 — 1"=30'

04/02/2014 - RFP No.: HSR 13-57

12/27/2013 8:40:20 AM c:\pwworking\hmm\external\pre45072\dms91106\FB-ST-2133-H.dgn

PRE45072

| REV | DATE | BY | CHK | APP | DESCRIPTION |
|---|---|---|---|---|---|

DESIGNED BY B. LUSCOMBE
DRAWN BY D. BARNHART
CHECKED BY M. ANDREWS
IN CHARGE R. COFFIN
DATE 12/31/13

**RECORD SET 15% DESIGN SUBMISSION - NOT FOR CONSTRUCTION**

URS | HMM | ARUP
CALIFORNIA HIGH-SPEED TRAIN

CALIFORNIA HIGH-SPEED RAIL AUTHORITY

**CALIFORNIA HIGH-SPEED TRAIN PROJECT**
**FRESNO TO BAKERSFIELD**
HANFORD SUBSECTION
ALIGNMENT H
OVERHEAD PLANNING STUDY
EXCELSIOR AVE

CONTRACT NO. HSR 06-0003
DRAWING NO. ST2133
SCALE AS SHOWN
SHEET NO. 7 OF 14

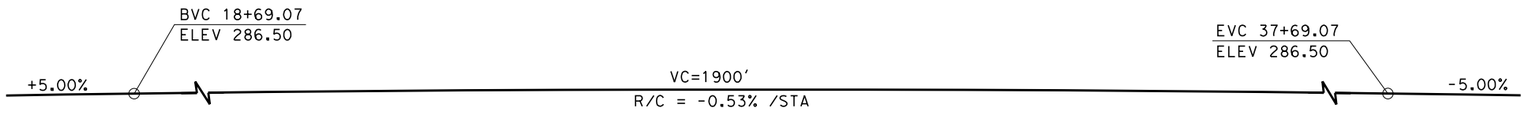


## PROFILE GRADE
NO SCALE

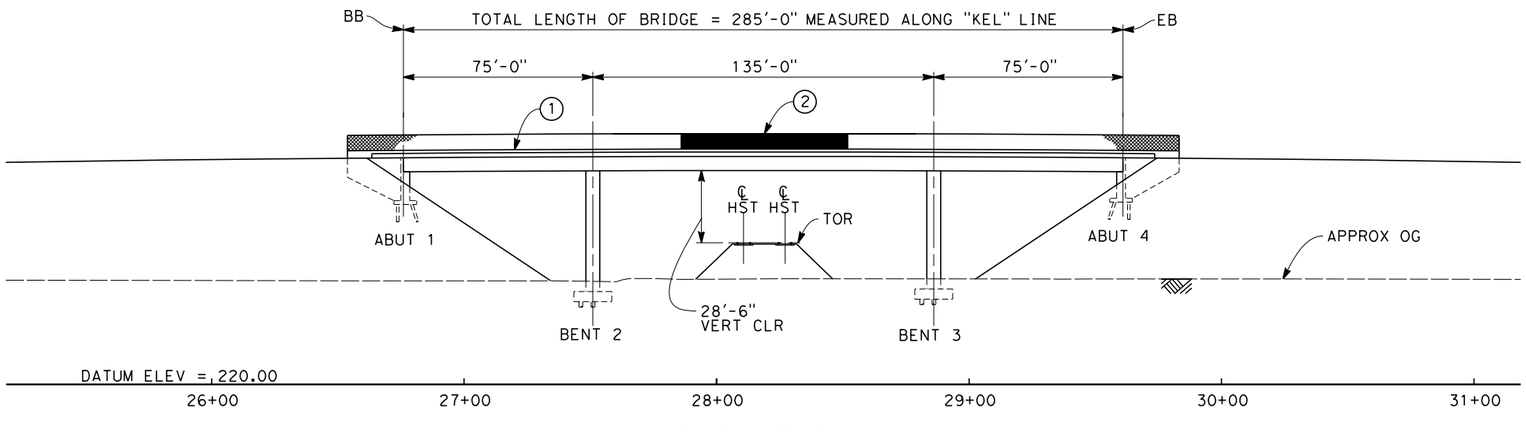


## ELEVATION
SCALE: 1"=30'

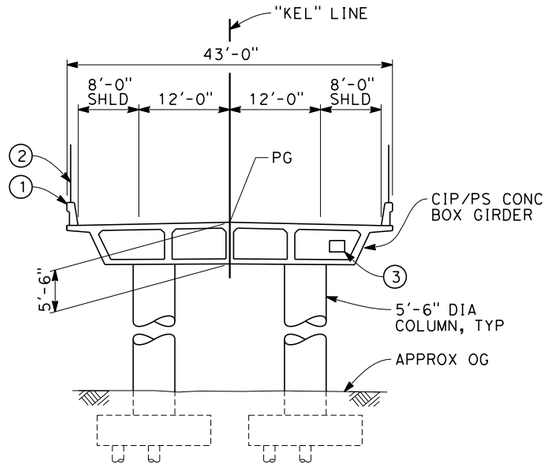


## TYPICAL SECTION
SCALE: 1"=10'

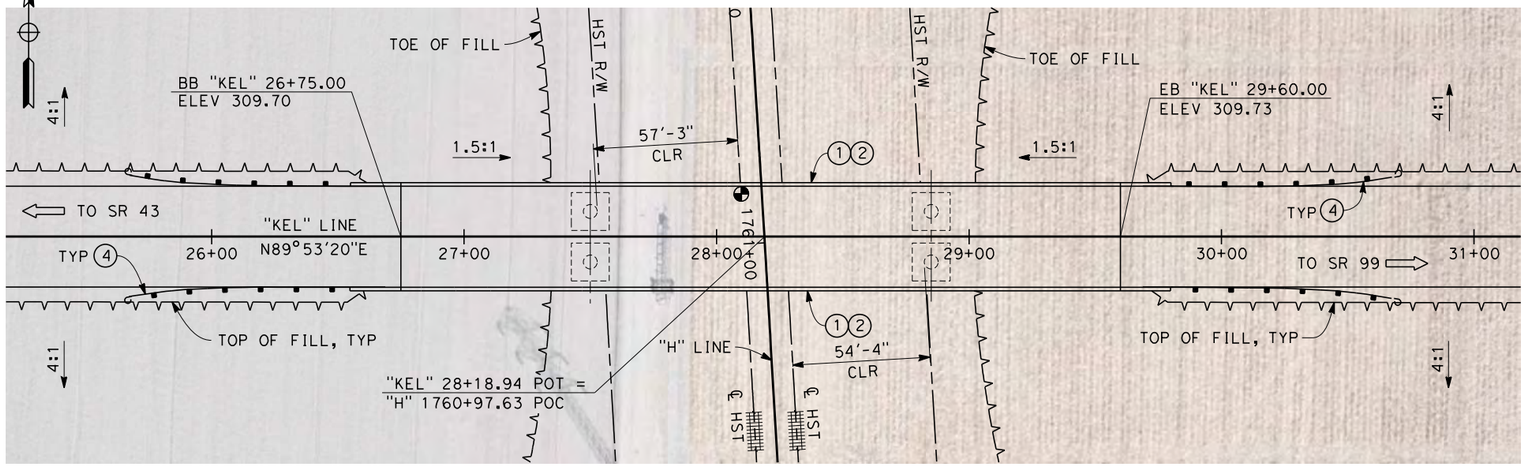


## PLAN
SCALE: 1"=30'

NOTES:

1. ALL PILES NOT SHOWN
2. FOR MINIMUM VERTICAL CLEARANCES, HORIZONTAL CURVE DATA, AND DETAILS NOT SHOWN, SEE ROADWAY PLANS.

LEGEND:

(1) CONCRETE BARRIER WITH AR FENCE
(2) AR FENCE WITH SOLID PLATE OVER HST
(3) FUTURE UTILITY ENCASEMENT OPENING
(4) MBGR

10 0 10 20 — 1"=10'
30 0 30 60 — 1"=30'

04/02/2014 - RFP No.: HSR 13-57

| REV | DATE | BY | CHK | APP | DESCRIPTION |
|---|---|---|---|---|---|

DESIGNED BY B. LUSCOMBE
DRAWN BY D. BARNHART
CHECKED BY M. ANDREWS
IN CHARGE R. COFFIN
DATE 12/31/13

RECORD SET 15% DESIGN SUBMISSION - NOT FOR CONSTRUCTION

URS | HMM | ARUP
CALIFORNIA HIGH-SPEED TRAIN

CALIFORNIA HIGH-SPEED RAIL AUTHORITY

**CALIFORNIA HIGH-SPEED TRAIN PROJECT**
**FRESNO TO BAKERSFIELD**
HANFORD SUBSECTION
ALIGNMENT H
OVERHEAD PLANNING STUDY
ELDER AVE

CONTRACT NO. HSR 06-0003
DRAWING NO. ST2135
SCALE AS SHOWN
SHEET NO. 8 OF 14

PRE45072 12/27/2013 8:50:33 AM c:\pwworking\hmm\external\pre45072\dms91106\FB-ST-2135-H.dgn

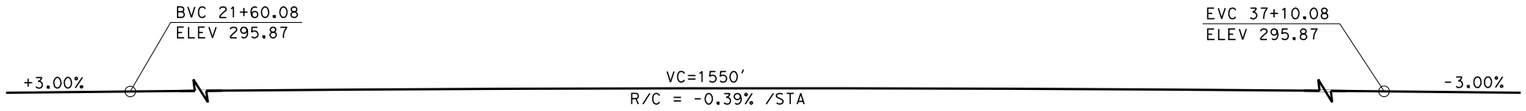


## PROFILE GRADE
NO SCALE

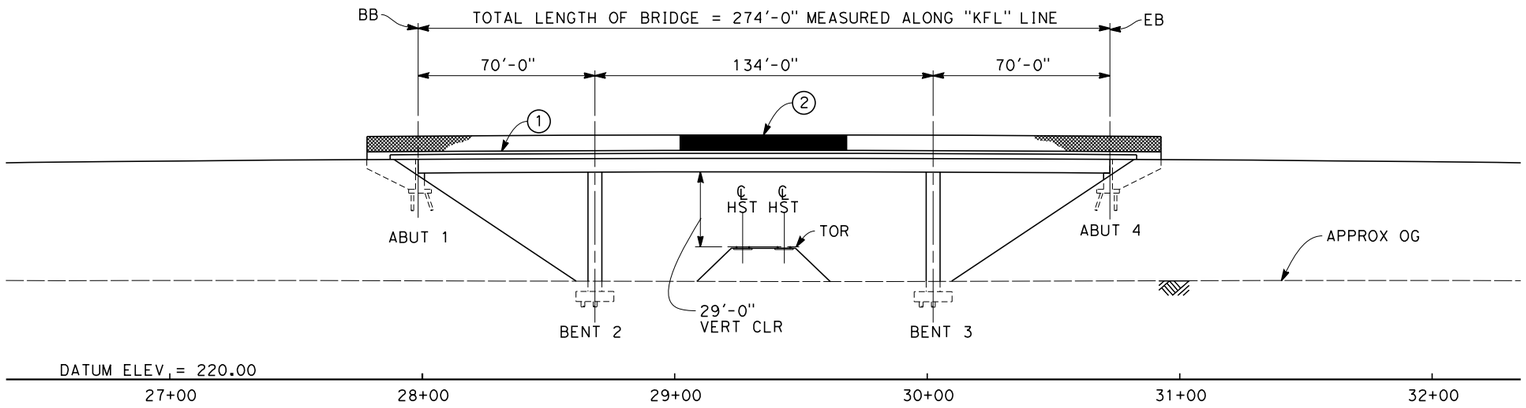


## ELEVATION
SCALE: 1"=30'

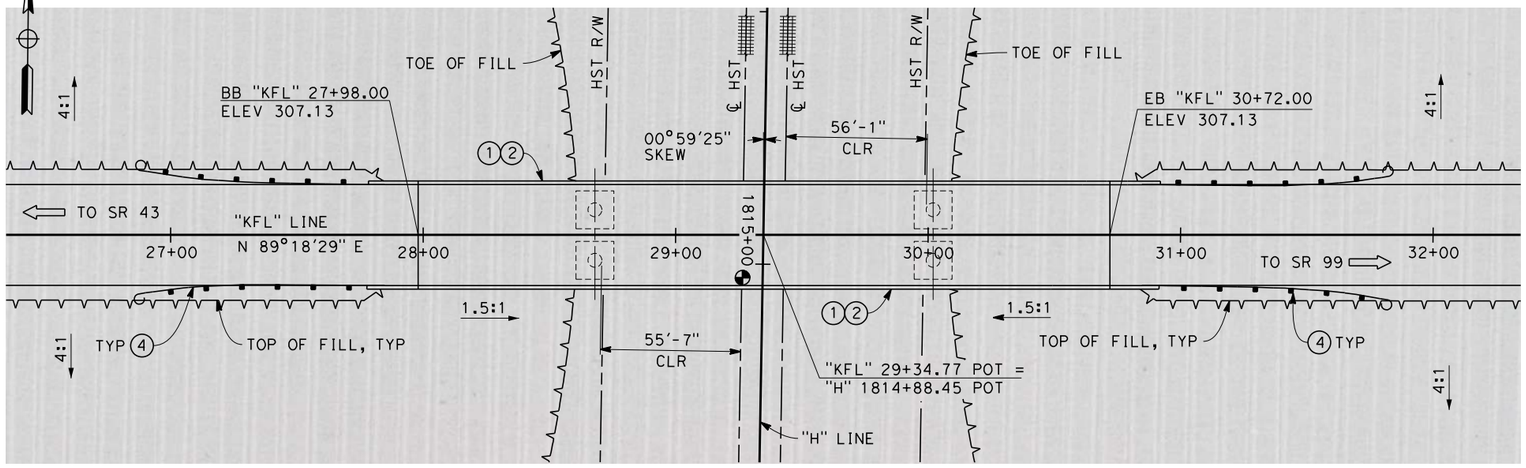


## PLAN
SCALE: 1"=30'

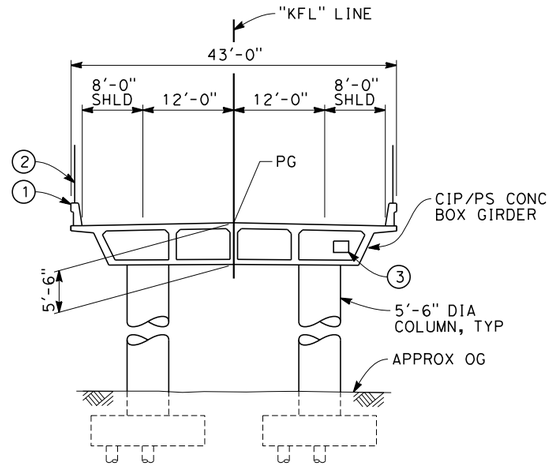


## TYPICAL SECTION
SCALE: 1"=10'

NOTES:

1. ALL PILES NOT SHOWN
2. FOR MINIMUM VERTICAL CLEARANCES, HORIZONTAL CURVE DATA, AND DETAILS NOT SHOWN, SEE ROADWAY PLANS.

LEGEND:

(1) CONCRETE BARRIER WITH AR FENCE

(2) AR FENCE WITH SOLID PLATE OVER HST

(3) FUTURE UTILITY ENCASEMENT OPENING

(4) MBGR

10 0 10 20 — 1"=10'

30 0 30 60 — 1"=30'

04/02/2014 - RFP No.: HSR 13-57

| REV | DATE | BY | CHK | APP | DESCRIPTION |
|---|---|---|---|---|---|

DESIGNED BY B. LUSCOMBE
DRAWN BY D. BARNHART
CHECKED BY M. ANDREWS
IN CHARGE R. COFFIN
DATE 12/31/13

**RECORD SET 15% DESIGN SUBMISSION - NOT FOR CONSTRUCTION**

URS | HMM | ARUP
CALIFORNIA HIGH-SPEED TRAIN

CALIFORNIA HIGH-SPEED RAIL AUTHORITY

**CALIFORNIA HIGH-SPEED TRAIN PROJECT**
**FRESNO TO BAKERSFIELD**
HANFORD SUBSECTION
ALIGNMENT H
OVERHEAD PLANNING STUDY
FLINT AVE

CONTRACT NO. HSR 06-0003
DRAWING NO. ST2137
SCALE AS SHOWN
SHEET NO. 9 OF 14

PRE45072 12/27/2013 9:10:28 AM c:\pwworking\hmm\external\pre45072\dms91106\FB-ST-2137-H.dgn

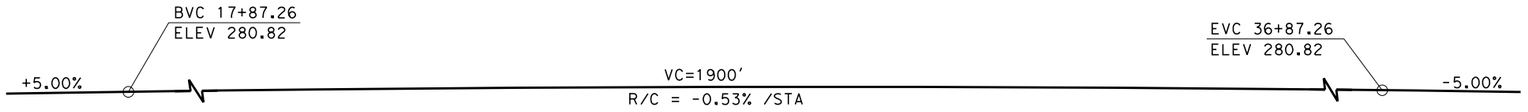


## PROFILE GRADE
NO SCALE

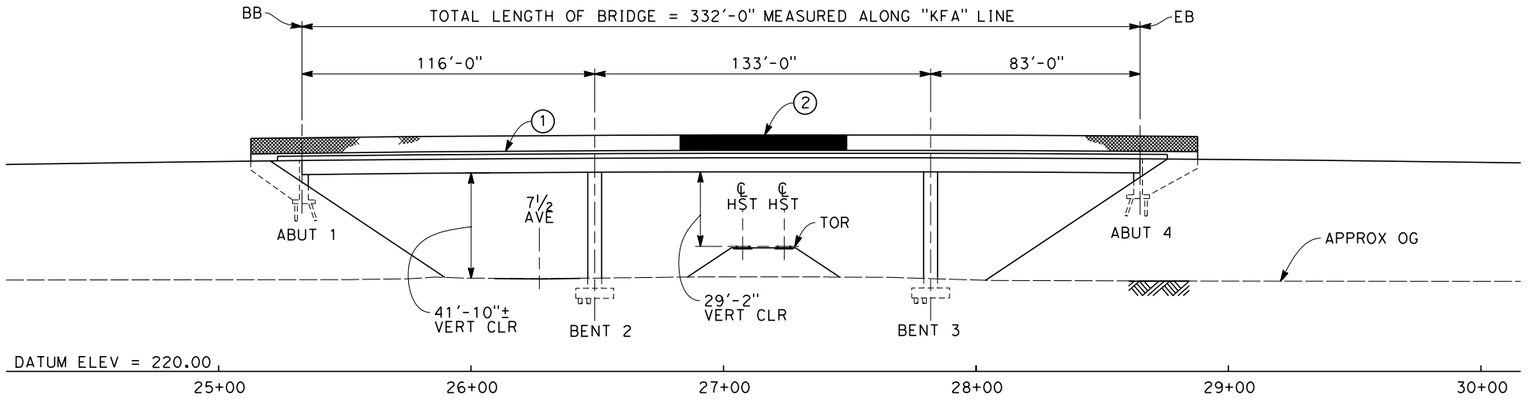


## ELEVATION
SCALE: 1"=30'

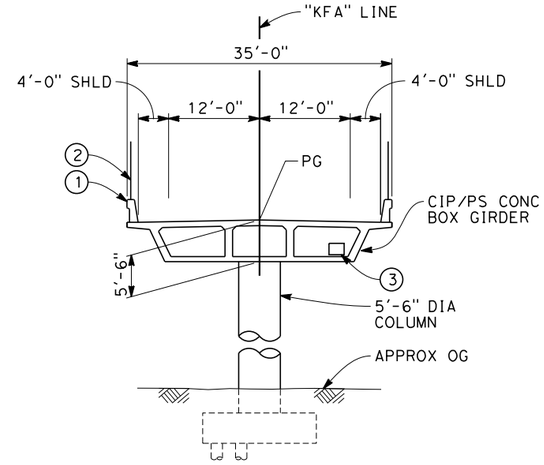


## TYPICAL SECTION
SCALE: 1"=10'

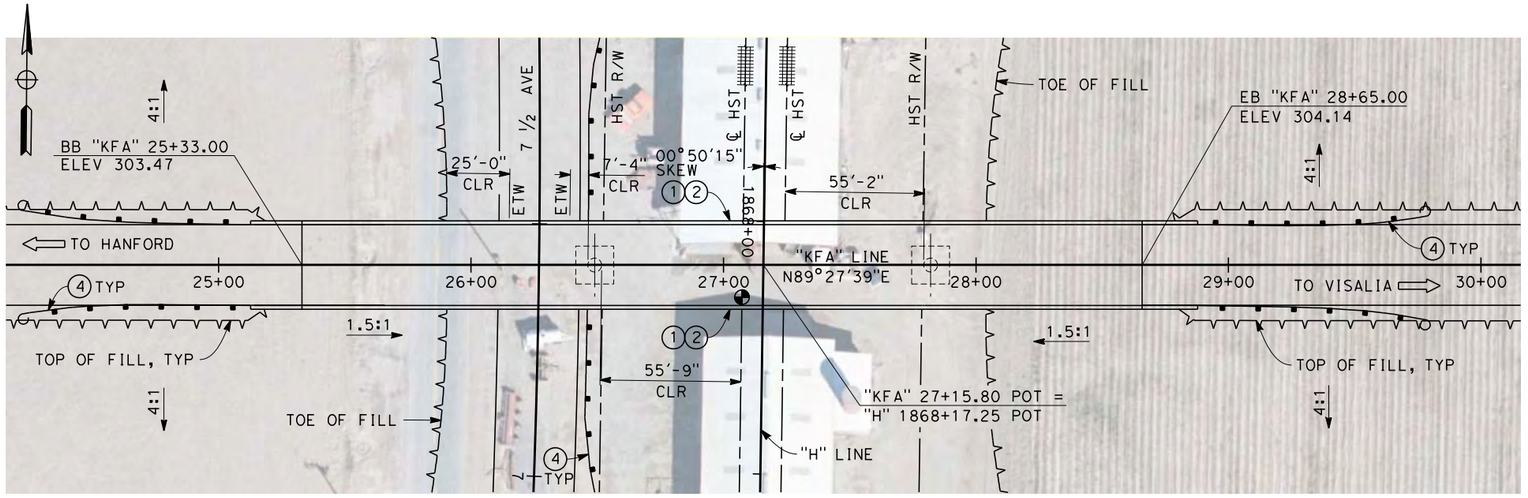


## PLAN
SCALE: 1"=30'

NOTES:

1. ALL PILES NOT SHOWN.
2. FOR MINIMUM VERTICAL CLEARANCES, HORIZONTAL CURVE DATA, AND DETAILS NOT SHOWN, SEE ROADWAY PLANS.

LEGEND:

(1) CONCRETE BARRIER WITH AR FENCE

(2) AR FENCE WITH SOLID PLATE OVER HST

(3) FUTURE UTILITY ENCASEMENT OPENING

(4) MBGR

10 0 10 20 — 1"=10'

30 0 30 60 — 1"=30'

| REV | DATE | BY | CHK | APP | DESCRIPTION |
|---|---|---|---|---|---|

DESIGNED BY B. LUSCOMBE
DRAWN BY D. BARNHART
CHECKED BY M. ANDREWS
IN CHARGE R. COFFIN
DATE 12/31/13

**RECORD SET 15% DESIGN SUBMISSION - NOT FOR CONSTRUCTION**

URS | HMM | ARUP

CALIFORNIA HIGH-SPEED TRAIN

CALIFORNIA HIGH-SPEED RAIL AUTHORITY

**CALIFORNIA HIGH-SPEED TRAIN PROJECT**
**FRESNO TO BAKERSFIELD**
HANFORD SUBSECTION
ALIGNMENT H
OVERHEAD PLANNING STUDY
FARGO AVE

CONTRACT NO. HSR 06-0003
DRAWING NO. ST2139
SCALE AS SHOWN
SHEET NO. 10 OF 14

04/02/2014 - RFP No.: HSR 13-57

12/27/2013 4:17:22 PM c:\pwworking\hmm\external\pro39009\dms91106\FB-ST-2139-H.dgn Clark

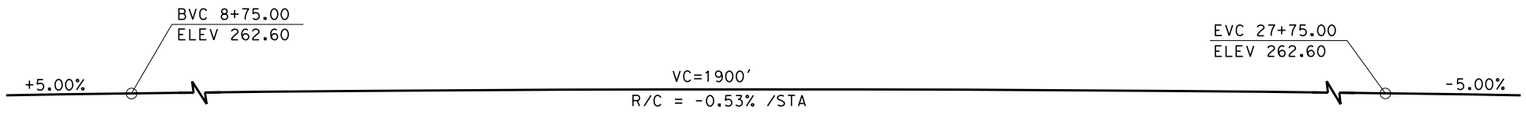


## PROFILE GRADE
NO SCALE

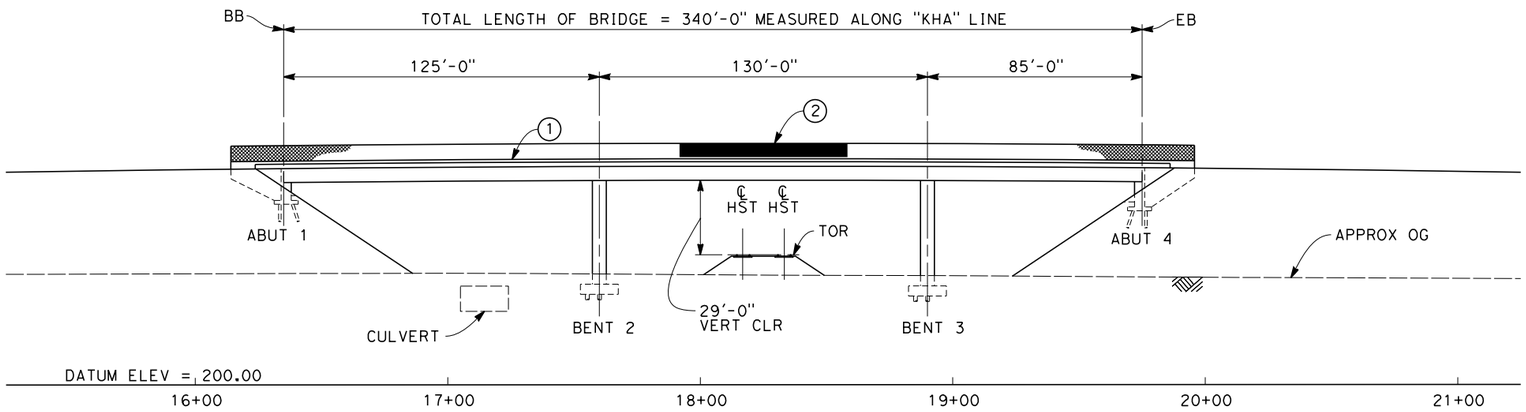


## ELEVATION
SCALE: 1"=30'

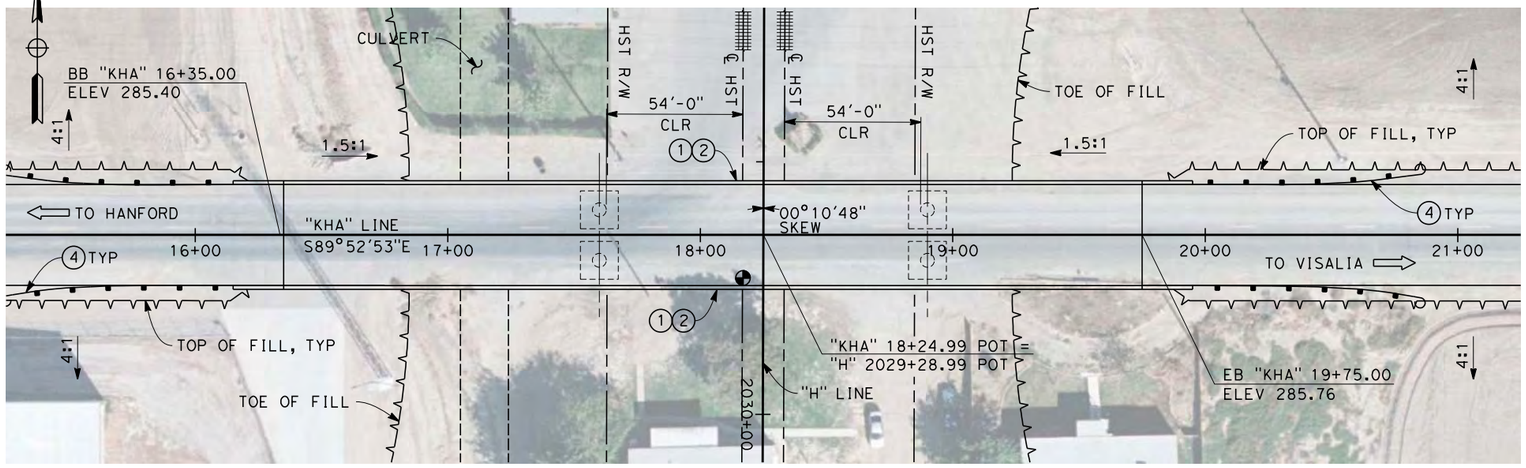


## PLAN
SCALE: 1"=30'

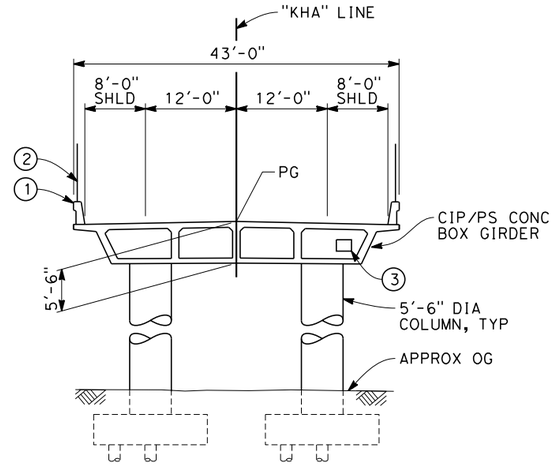


## TYPICAL SECTION
SCALE: 1"=10'

NOTES:

1. ALL PILES NOT SHOWN
2. FOR MINIMUM VERTICAL CLEARANCES, HORIZONTAL CURVE DATA, AND DETAILS NOT SHOWN, SEE ROADWAY PLANS.

LEGEND:

(1) CONCRETE BARRIER WITH AR FENCE

(2) AR FENCE WITH SOLID PLATE OVER HST

(3) FUTURE UTILITY ENCASEMENT OPENING

(4) MBGR

10 0 10 20 — 1"=10'

30 0 30 60 — 1"=30'

04/02/2014 - RFP No.: HSR 13-57

| REV | DATE | BY | CHK | APP | DESCRIPTION |
|---|---|---|---|---|---|

DESIGNED BY B. LUSCOMBE
DRAWN BY D. BARNHART
CHECKED BY M. ANDREWS
IN CHARGE R. COFFIN
DATE 12/31/13

**RECORD SET 15% DESIGN SUBMISSION - NOT FOR CONSTRUCTION**

URS | HMM | ARUP
CALIFORNIA HIGH-SPEED TRAIN

CALIFORNIA HIGH-SPEED RAIL AUTHORITY

**CALIFORNIA HIGH-SPEED TRAIN PROJECT**
**FRESNO TO BAKERSFIELD**
HANFORD SUBSECTION
ALIGNMENT H
OVERHEAD PLANNING STUDY
HANFORD ARMONA RD

CONTRACT NO. HSR 06-0003
DRAWING NO. ST2143
SCALE AS SHOWN
SHEET NO. 11 OF 14

PRE45072 12/27/2013 9:58:02 AM c:\pwworking\hmm\external\pre45072\dms91106\FB-ST-2143-H.dgn

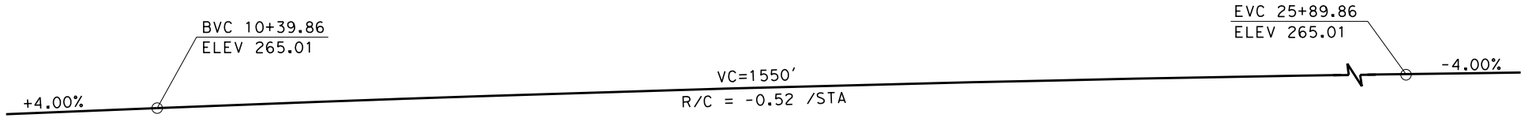


## PROFILE GRADE
NO SCALE

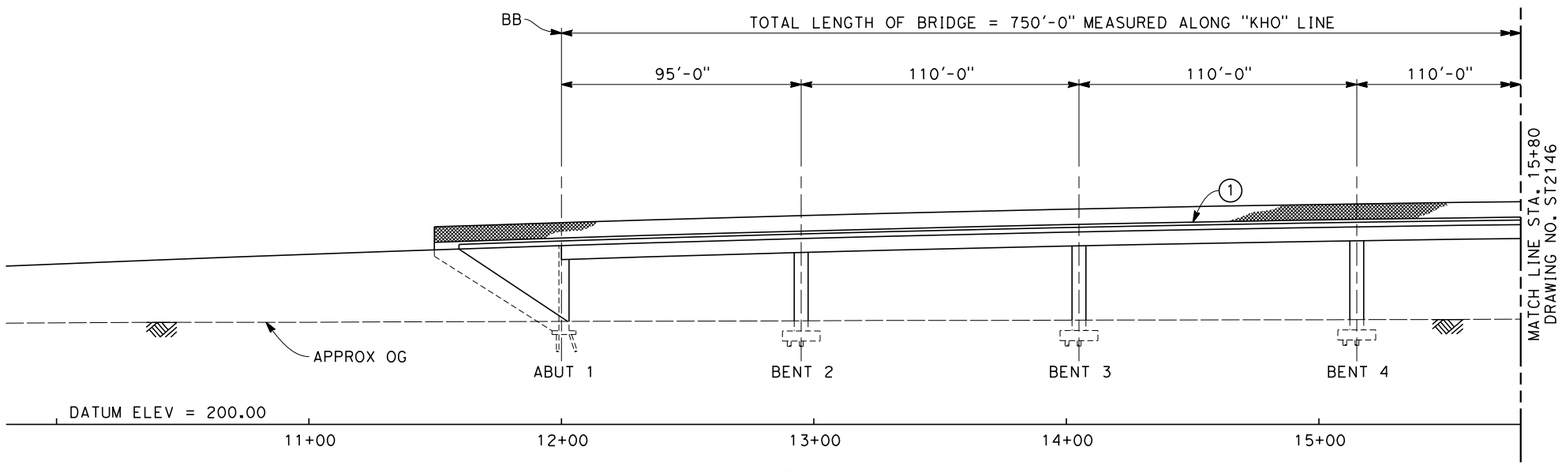


## ELEVATION
SCALE: 1"=30'

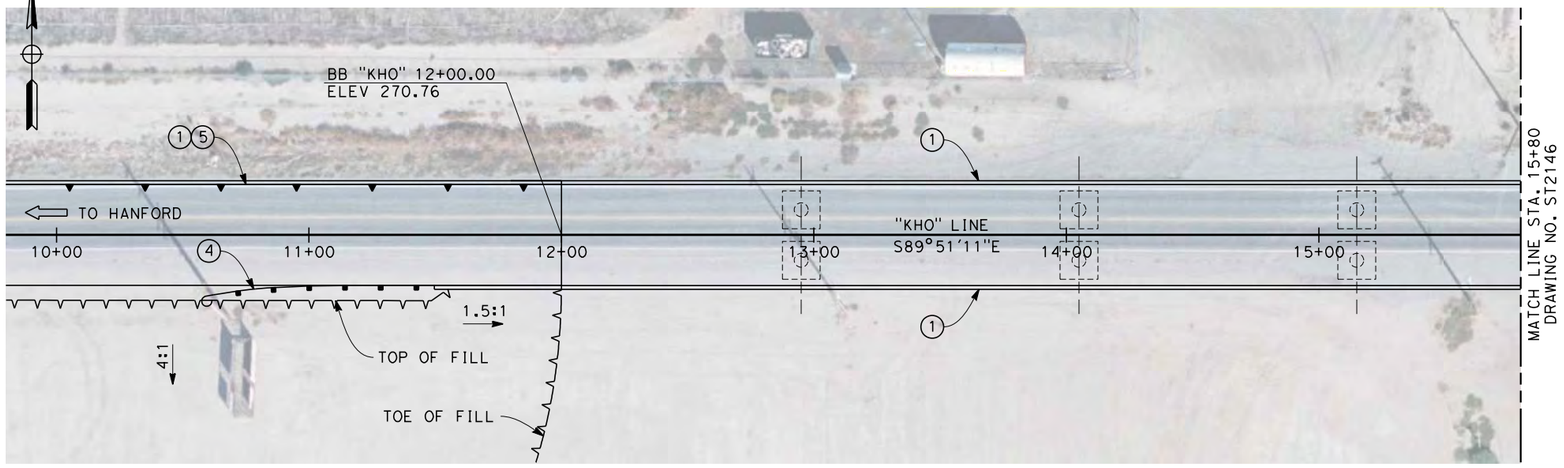


## PLAN
SCALE: 1"=30'

NOTES:

1. ALL PILES NOT SHOWN
2. FOR MINIMUM VERTICAL CLEARANCES, HORIZONTAL CURVE DATA, AND DETAILS NOT SHOWN, SEE ROADWAY PLANS.

LEGEND:

(1) CONCRETE BARRIER WITH AR FENCE
(2) AR FENCE WITH SOLID PLATE OVER HST
(3) FUTURE UTILITY ENCASEMENT OPENING
(4) MBGR
(5) RETAINING WALL

30 0 30 60
1"=30'

04/02/2014 - RFP No.: HSR 13-57

| REV | DATE | BY | CHK | APP | DESCRIPTION |
|---|---|---|---|---|---|

DESIGNED BY B. LUSCOMBE
DRAWN BY D. BARNHART
CHECKED BY M. ANDREWS
IN CHARGE R. COFFIN
DATE 12/31/13

**RECORD SET 15% DESIGN SUBMISSION - NOT FOR CONSTRUCTION**

URS | HMM | ARUP
CALIFORNIA HIGH-SPEED TRAIN

CALIFORNIA HIGH-SPEED RAIL AUTHORITY

**CALIFORNIA HIGH-SPEED TRAIN PROJECT**
**FRESNO TO BAKERSFIELD**
HANFORD SUBSECTION
ALIGNMENT H
OVERHEAD PLANNING STUDY
HOUSTON AVE

CONTRACT NO. HSR 06-0003
DRAWING NO. ST2145
SCALE AS SHOWN
SHEET NO. 12 OF 14

12/23/2013 2:02:16 PM c:\pwworking\hmm\external\bar50597\dms91106\FB-ST-2145-H.dgn
BAR50597

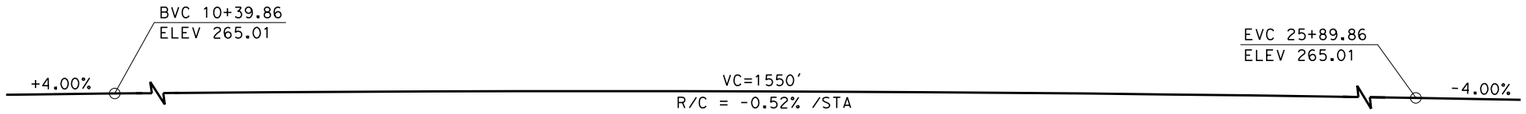


## PROFILE GRADE
NO SCALE

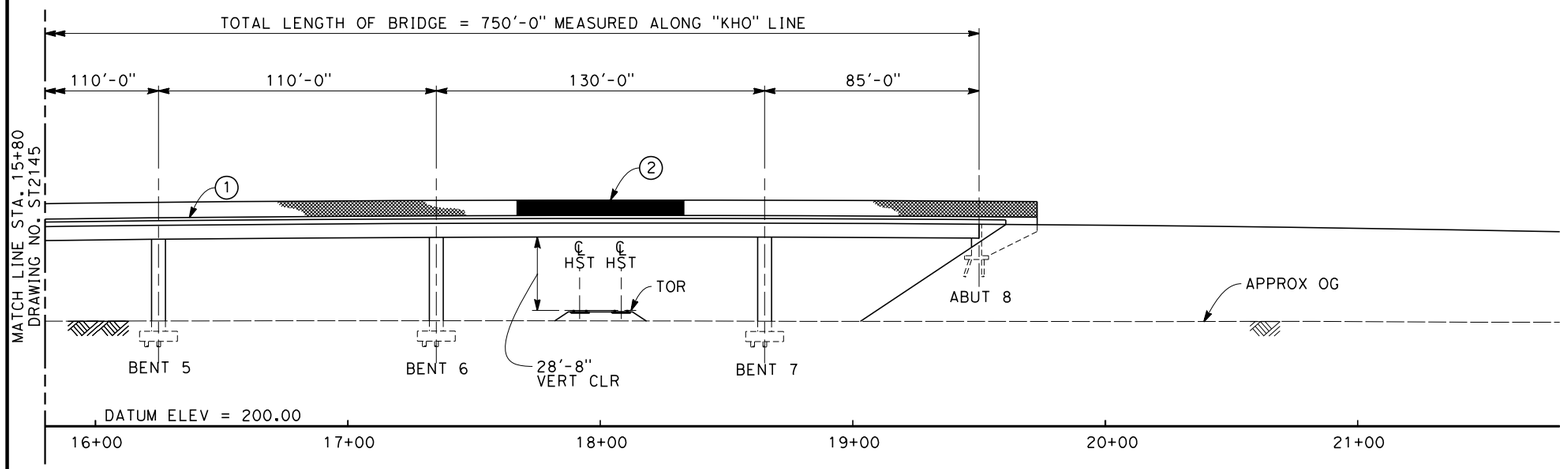


## ELEVATION
SCALE: 1"=30'

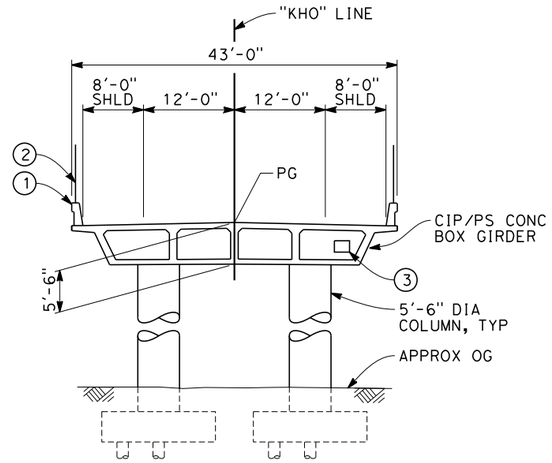


## TYPICAL SECTION
SCALE: 1"=10'

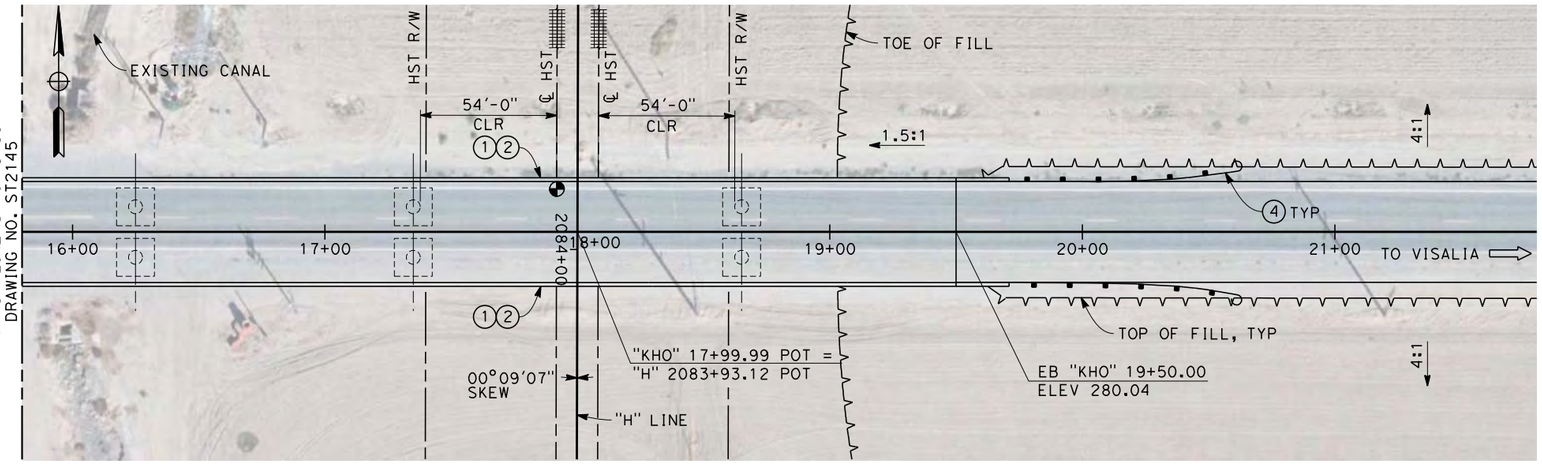


## PLAN
SCALE: 1"=30'

NOTES:

1. ALL PILES NOT SHOWN
2. FOR MINIMUM VERTICAL CLEARANCES, HORIZONTAL CURVE DATA, AND DETAILS NOT SHOWN, SEE ROADWAY PLANS.

LEGEND:

(1) CONCRETE BARRIER WITH AR FENCE

(2) AR FENCE WITH SOLID PLATE OVER HST

(3) FUTURE UTILITY ENCASEMENT OPENING

(4) MBGR

10 0 10 20
1"=10'

30 0 30 60
1"=30'

| REV | DATE | BY | CHK | APP | DESCRIPTION |
|---|---|---|---|---|---|

DESIGNED BY B. LUSCOMBE
DRAWN BY D. BARNHART
CHECKED BY M. ANDREWS
IN CHARGE R. COFFIN
DATE 12/31/13

**RECORD SET 15% DESIGN SUBMISSION - NOT FOR CONSTRUCTION**

URS | HMM | ARUP
CALIFORNIA HIGH-SPEED TRAIN

CALIFORNIA HIGH-SPEED RAIL AUTHORITY

# CALIFORNIA HIGH-SPEED TRAIN PROJECT
# FRESNO TO BAKERSFIELD
HANFORD SUBSECTION
ALIGNMENT H
OVERHEAD PLANNING STUDY
HOUSTON AVE

CONTRACT NO. HSR 06-0003
DRAWING NO. ST2146
SCALE AS SHOWN
SHEET NO. 13 OF 14

04/02/2014 - RFP No.: HSR 13-57

12/27/2013 9:56:58 AM c:\pwworking\hmm\external\pre45072\dms91106\FB-ST-2146-H.dgn
PRE45072

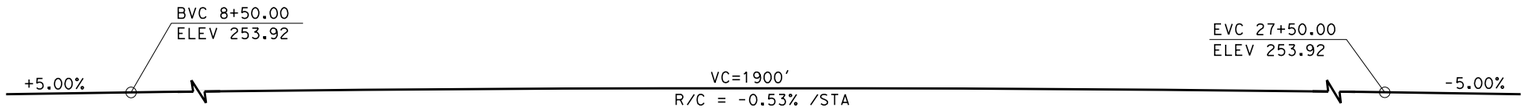


## PROFILE GRADE
NO SCALE

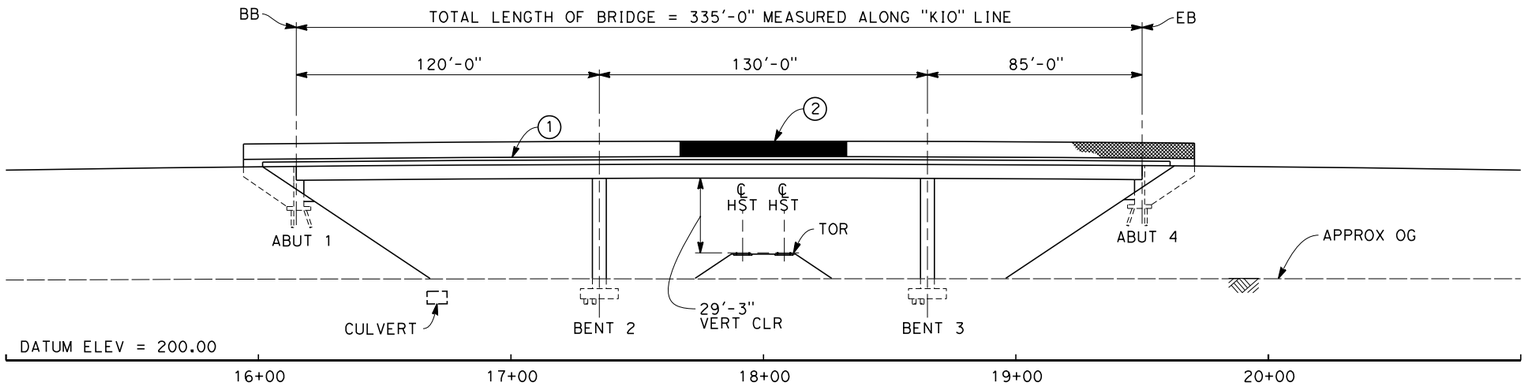


## ELEVATION
SCALE: 1"=30'

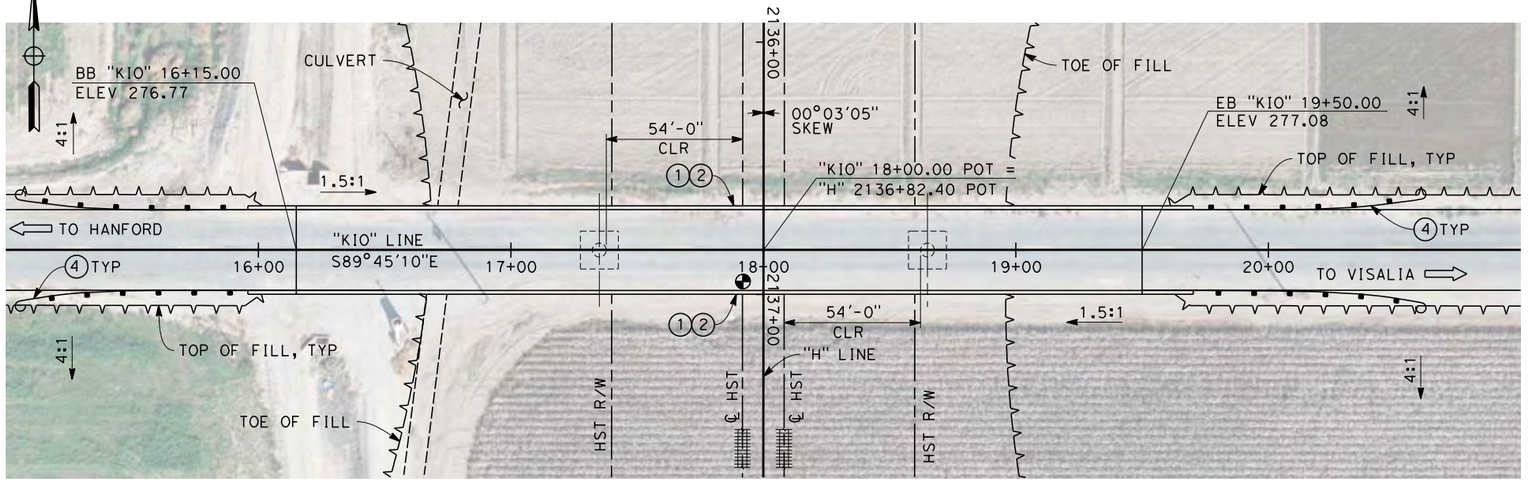


## PLAN
SCALE: 1"=30'

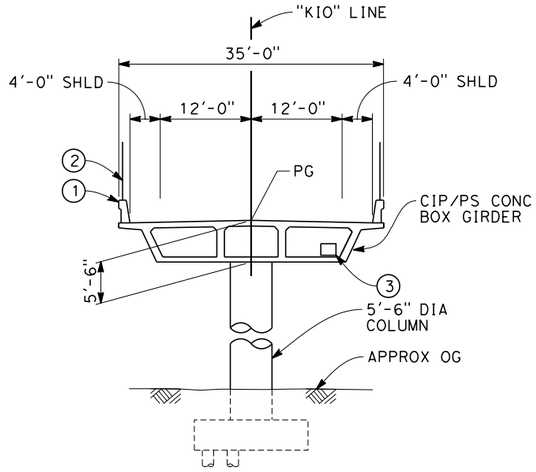


## TYPICAL SECTION
SCALE: 1"=10'

NOTES:

1. ALL PILES NOT SHOWN
2. FOR MINIMUM VERTICAL CLEARANCES, HORIZONTAL CURVE DATA, AND DETAILS NOT SHOWN, SEE ROADWAY PLANS.

LEGEND:

(1) CONCRETE BARRIER WITH AR FENCE

(2) AR FENCE WITH SOLID PLATE OVER HST

(3) FUTURE UTILITY ENCASEMENT OPENING

(4) MBGR

10 0 10 20
1"=10'

10 0 30 60
1"=30'

04/02/2014 - RFP No.: HSR 13-57

12/26/2013 3:16:49 PM c:\pwworking\hmm\external\pre45072\dms91106\FB-ST-2147-H.dgn

PRE45072

| REV | DATE | BY | CHK | APP | DESCRIPTION |
|---|---|---|---|---|---|

DESIGNED BY B. LUSCOMBE
DRAWN BY D. BARNHART
CHECKED BY M. ANDREWS
IN CHARGE R. COFFIN
DATE 12/31/13

**RECORD SET 15% DESIGN SUBMISSION - NOT FOR CONSTRUCTION**

URS | HMM | ARUP
CALIFORNIA HIGH-SPEED TRAIN

CALIFORNIA
HIGH-SPEED RAIL AUTHORITY

# CALIFORNIA HIGH-SPEED TRAIN PROJECT
# FRESNO TO BAKERSFIELD
HANFORD SUBSECTION
ALIGNMENT H
OVERHEAD PLANNING STUDY
IONA AVE

CONTRACT NO. HSR 06-0003
DRAWING NO. ST2147
SCALE AS SHOWN
SHEET NO. 14 OF 14

04/02/2014 - RFP No.: HSR 13-57

| REV | DATE | BY | CHK | APP | DESCRIPTION |
|---|---|---|---|---|---|
| | | | | | |

DESIGNED BY L. SMITH
DRAWN BY D. BARNHART
CHECKED BY M. AMINI
IN CHARGE R. COFFIN
DATE 12/31/13

**RECORD SET 15% DESIGN SUBMISSION - NOT FOR CONSTRUCTION**

URS | HMM | ARUP
CALIFORNIA HIGH-SPEED TRAIN

CALIFORNIA HIGH-SPEED RAIL AUTHORITY

# CALIFORNIA HIGH-SPEED TRAIN PROJECT
## FRESNO TO BAKERSFIELD
KAWEAH SUBSECTION
ALIGNMENT K4
OVERHEAD PLANNING STUDY
KEY MAP

CONTRACT NO. HSR 06-0003
DRAWING NO. SB0065
SCALE AS SHOWN
SHEET NO. 1 OF 5

12/27/2013 12:11:43 PM c:\pwworking\hmm\external\bar59603\dms91109\FB-SB-0065-K4.dgn
BAR59603

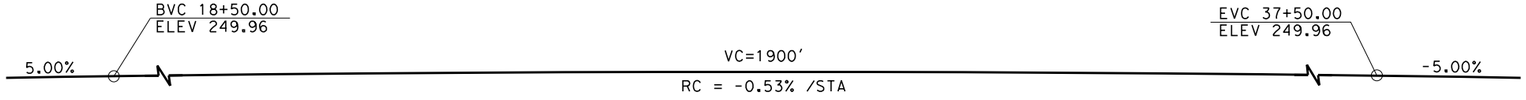


## PROFILE GRADE
NO SCALE

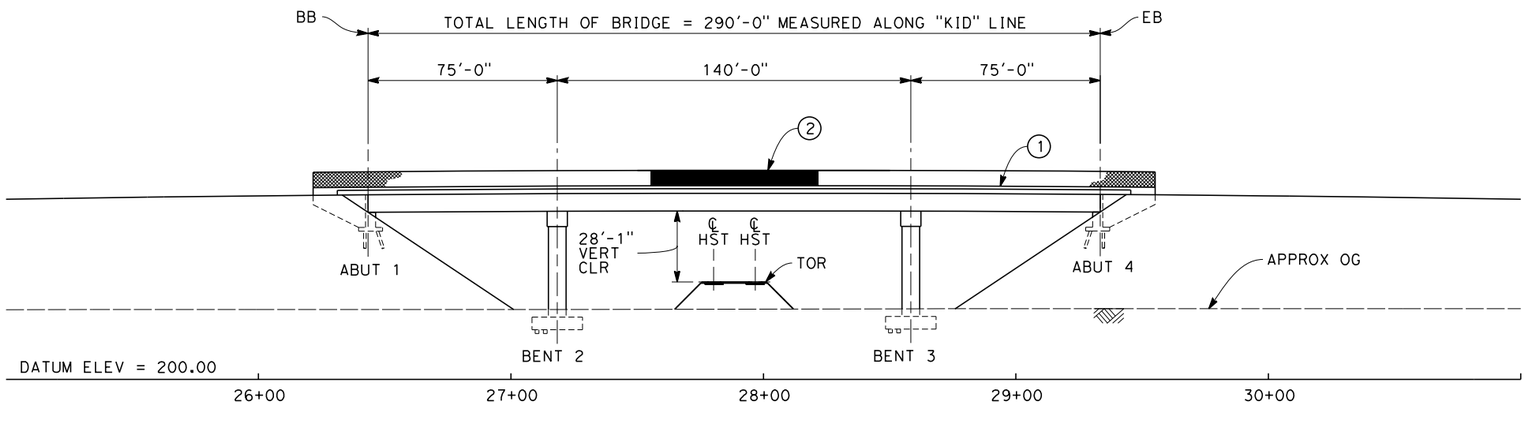


## ELEVATION
SCALE: 1"=30'

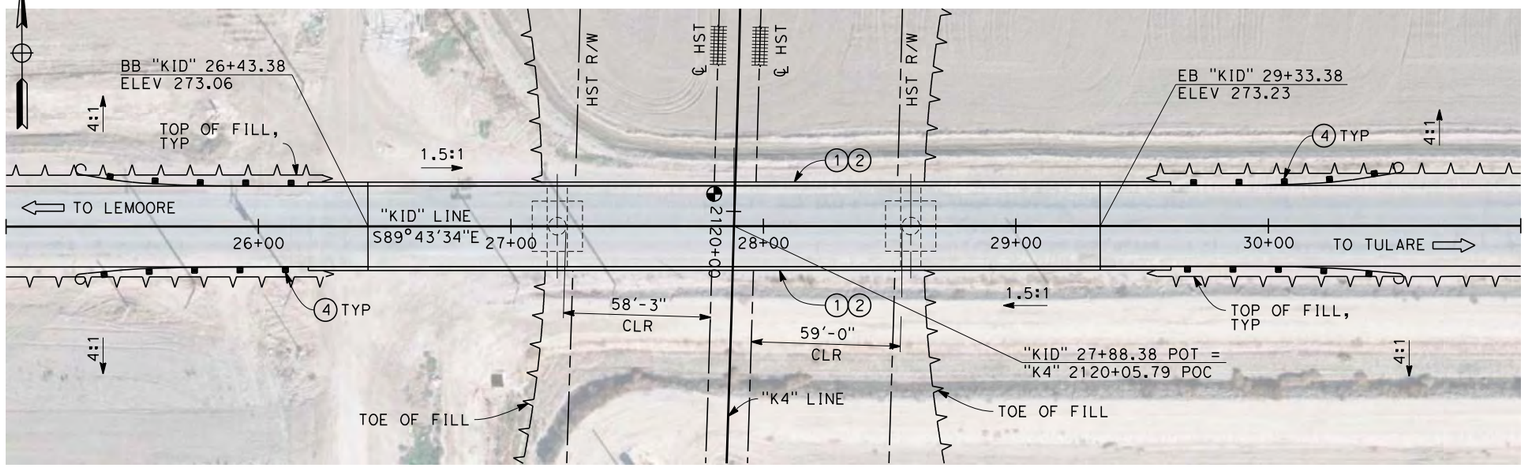


## PLAN
SCALE: 1"=30'

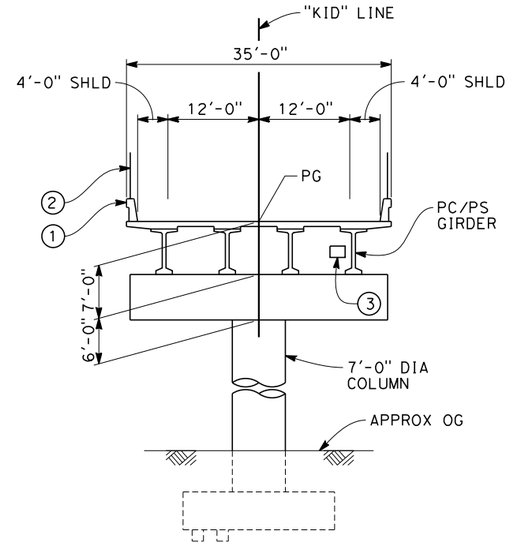


## TYPICAL SECTION
SCALE: 1"=10'

NOTES:

1. ALL PILES NOT SHOWN
2. FOR MINIMUM VERTICAL CLEARANCES, HORIZONTAL CURVE DATA, AND DETAILS NOT SHOWN, SEE ROADWAY PLANS.

LEGEND:

(1) CONCRETE BARRIER WITH AR FENCE
(2) AR FENCE WITH SOLID PLATE OVER HST
(3) FUTURE UTILITY ENCASEMENT OPENING
(4) MBGR

10 0 10 20 — 1"=10'
30 0 30 60 — 1"=30'

| REV | DATE | BY | CHK | APP | DESCRIPTION |
|---|---|---|---|---|---|

DESIGNED BY L. SMITH
DRAWN BY D. BARNHART
CHECKED BY M. AMINI
IN CHARGE R. COFFIN
DATE 12/31/13

**RECORD SET 15% DESIGN SUBMISSION - NOT FOR CONSTRUCTION**

URS | HMM | ARUP
CALIFORNIA HIGH-SPEED TRAIN

CALIFORNIA
HIGH-SPEED RAIL AUTHORITY

**CALIFORNIA HIGH-SPEED TRAIN PROJECT**
**FRESNO TO BAKERSFIELD**
KAWEAH SUBSECTION
ALIGNMENT K4
OVERHEAD PLANNING STUDY
IDAHO AVE

CONTRACT NO. HSR 06-0003
DRAWING NO. ST2220
SCALE AS SHOWN
SHEET NO. 2 OF 5

04/02/2014 - RFP No.: HSR 13-57

12/26/2013 1:02:54 PM c:\pwworking\hmm\external\pre45072\dms91109\FB-ST-2220-K4.dgn
PRE45072

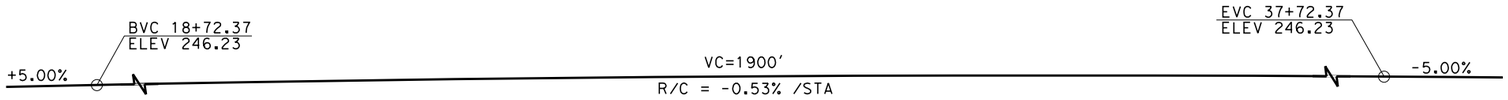


## PROFILE GRADE
NO SCALE

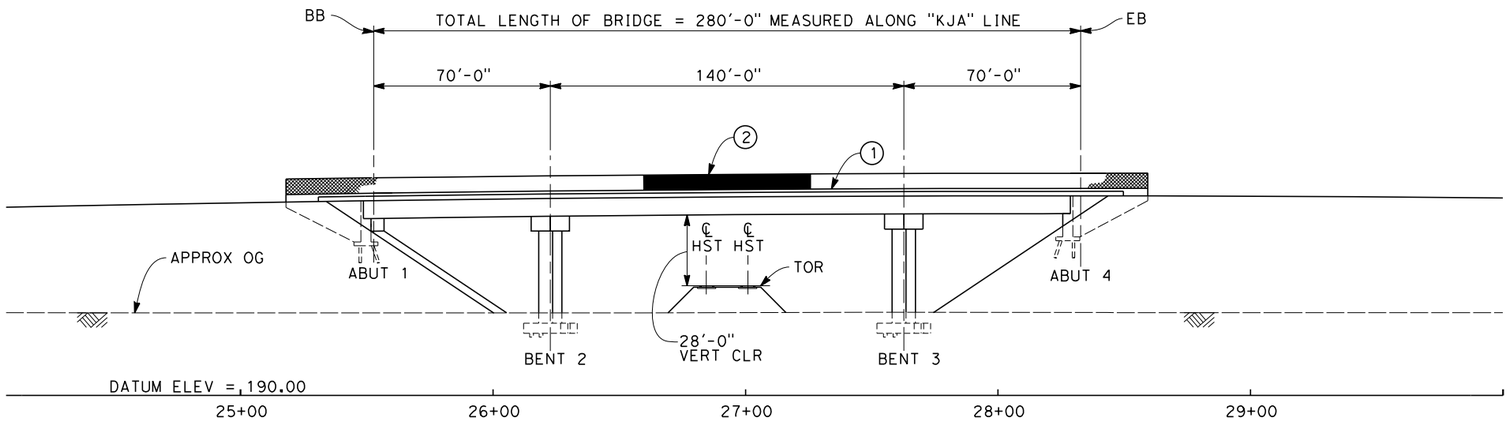


## ELEVATION
SCALE: 1"=30'

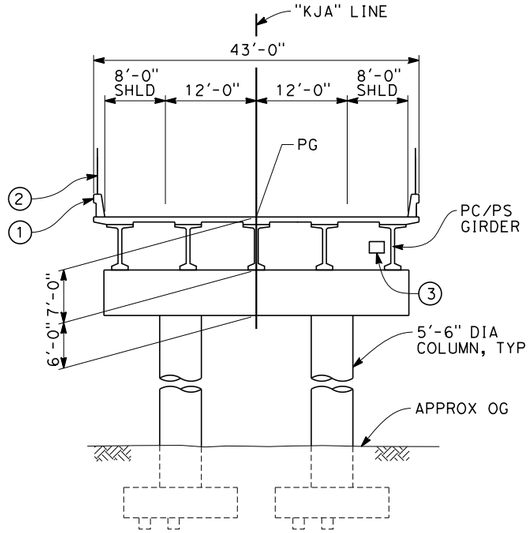


## TYPICAL SECTION
SCALE: 1"=10'

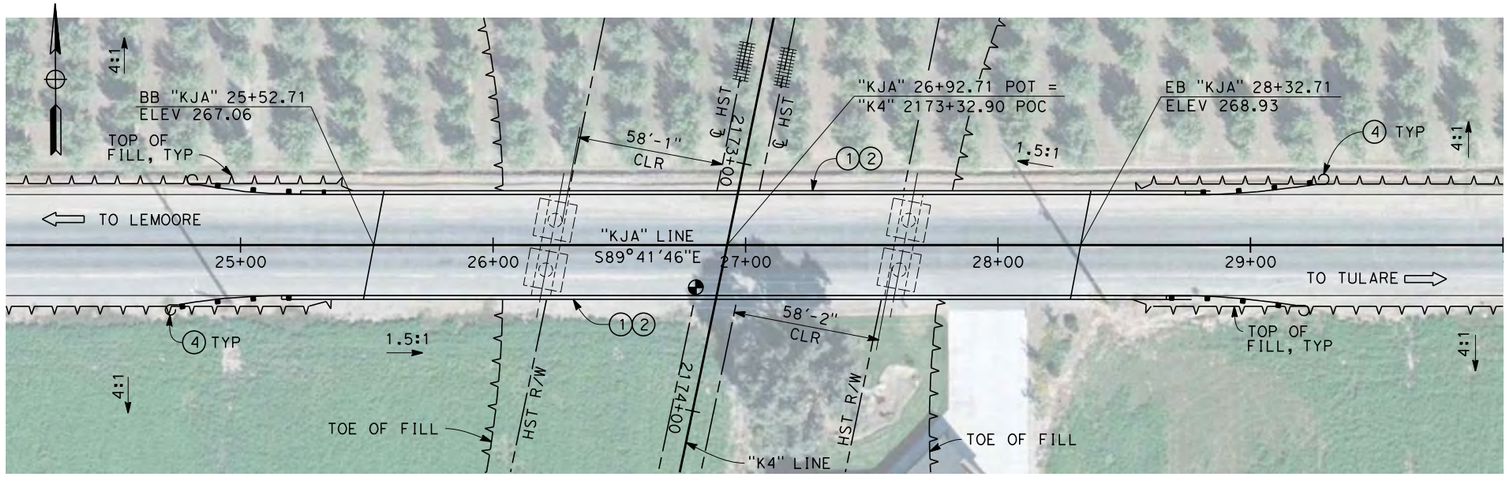


## PLAN
SCALE: 1"=30'

NOTES:

1. ALL PILES NOT SHOWN
2. FOR MINIMUM VERTICAL CLEARANCES, HORIZONTAL CURVE DATA, AND DETAILS NOT SHOWN, SEE ROADWAY PLANS.

LEGEND:

(1) CONCRETE BARRIER WITH AR FENCE
(2) AR FENCE WITH SOLID PLATE OVER HST
(3) FUTURE UTILITY ENCASEMENT OPENING
(4) MBGR

10 0 10 20 — 1"=10'

30 0 30 60 — 1"=30'

04/02/2014 - RFP No.: HSR 13-57

| REV | DATE | BY | CHK | APP | DESCRIPTION |
|---|---|---|---|---|---|

DESIGNED BY L SMITH
DRAWN BY D. BARNHART
CHECKED BY M. AMINI
IN CHARGE R. COFFIN
DATE 12/31/13

RECORD SET 15% DESIGN SUBMISSION - NOT FOR CONSTRUCTION

URS | HMM | ARUP
CALIFORNIA HIGH-SPEED TRAIN

CALIFORNIA HIGH-SPEED RAIL AUTHORITY

# CALIFORNIA HIGH-SPEED TRAIN PROJECT FRESNO TO BAKERSFIELD
KAWEAH SUBSECTION
ALIGNMENT K4
OVERHEAD PLANNING STUDY
JACKSON AVE

CONTRACT NO. HSR 06-0003
DRAWING NO. ST2222
SCALE AS SHOWN
SHEET NO. 3 OF 5

12/24/2013 11:52:58 AM c:\pwworking\hmm\external\pre45072\dms91109\FB-ST-2222-K4.dgn
PRE45072

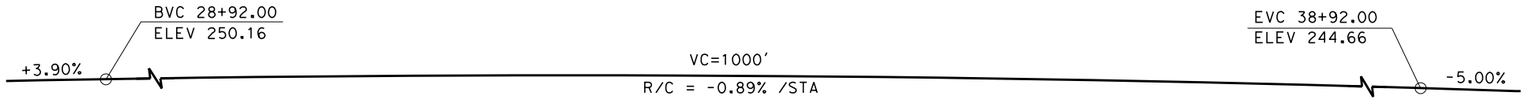


## PROFILE GRADE
NO SCALE

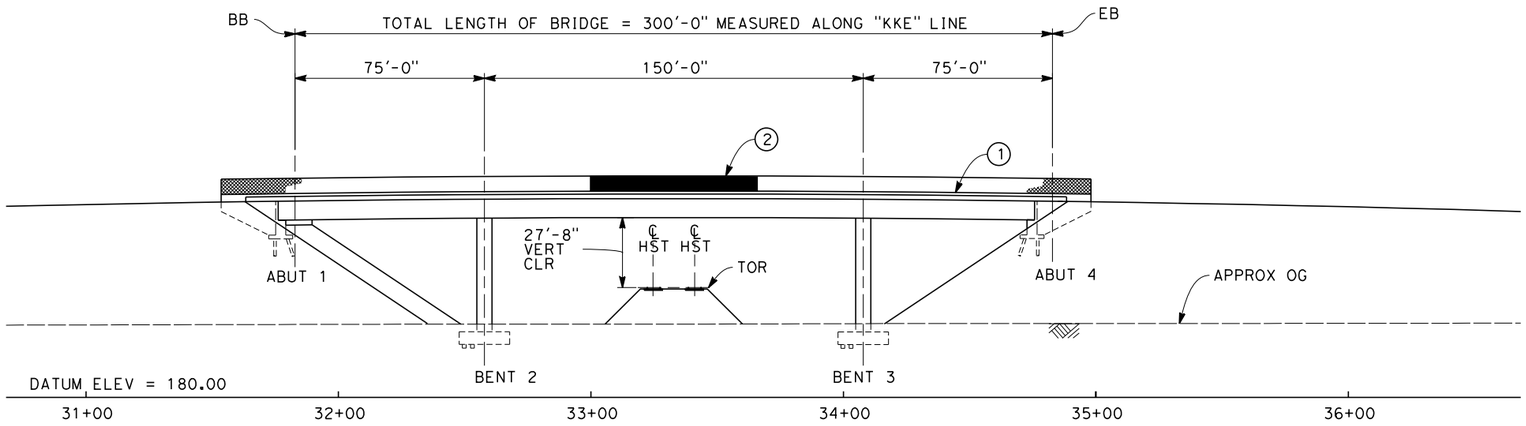


## ELEVATION
SCALE: 1"=30'

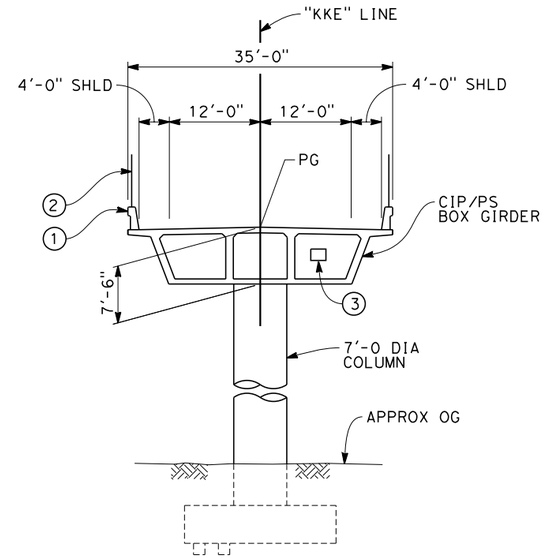


## TYPICAL SECTION
SCALE: 1"=10'

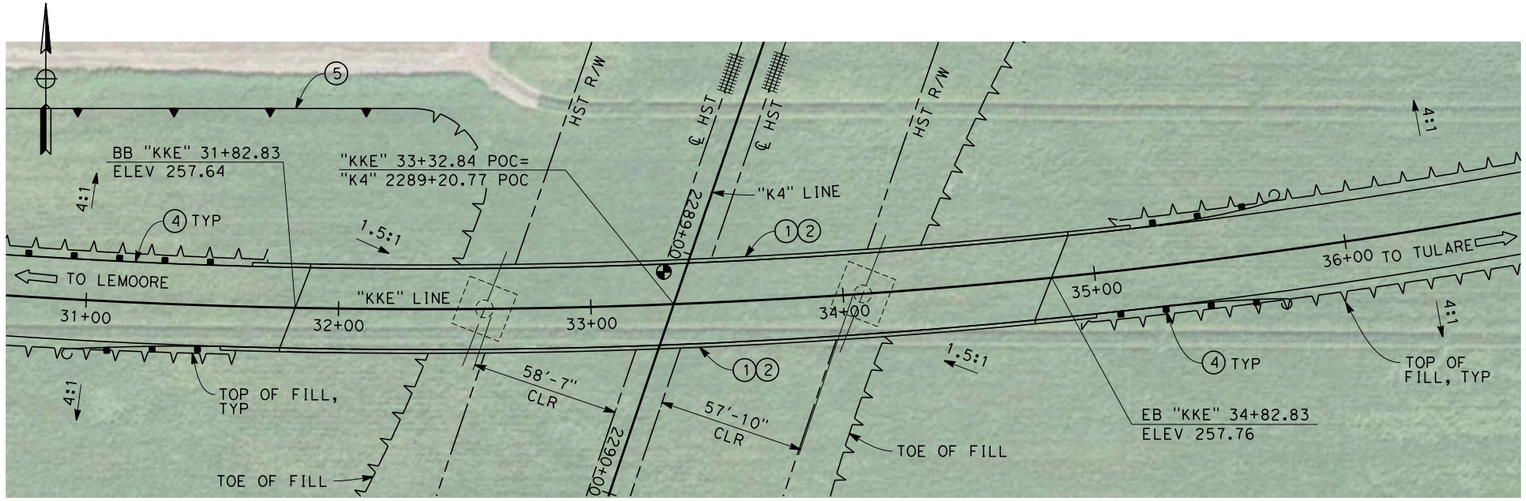


## PLAN
SCALE: 1"=30'

NOTES:

1. ALL PILES NOT SHOWN
2. FOR MINIMUM VERTICAL CLEARANCES, HORIZONTAL CURVE DATA, AND DETAILS NOT SHOWN, SEE ROADWAY PLANS.

LEGEND:

1. CONCRETE BARRIER WITH AR FENCE
2. AR FENCE WITH SOLID PLATE OVER HST
3. FUTURE UTILITY ENCASEMENT OPENING
4. MBGR
5. RETAINING WALL

10 0 10 20 — 1"=10'

30 0 30 60 — 1"=30'

04/02/2014 - RFP No.: HSR 13-57

12/26/2013 8:18:59 AM c:\pwworking\hmm\external\pre45072\dms91109\FB-ST-2226-K4.dgn

PRE45072

| REV | DATE | BY | CHK | APP | DESCRIPTION |
|---|---|---|---|---|---|

DESIGNED BY L. SMITH
DRAWN BY D. BARNHART
CHECKED BY M. AMINI
IN CHARGE R. COFFIN
DATE 12/31/13

RECORD SET 15% DESIGN SUBMISSION - NOT FOR CONSTRUCTION

URS | HMM | ARUP
CALIFORNIA HIGH-SPEED TRAIN

CALIFORNIA HIGH-SPEED RAIL AUTHORITY

# CALIFORNIA HIGH-SPEED TRAIN PROJECT FRESNO TO BAKERSFIELD
KAWEAH SUBSECTION
ALIGNMENT K4
OVERHEAD PLANNING STUDY
KENT AVE

CONTRACT NO. HSR 06-0003
DRAWING NO. ST2226
SCALE AS SHOWN
SHEET NO. 4 OF 5

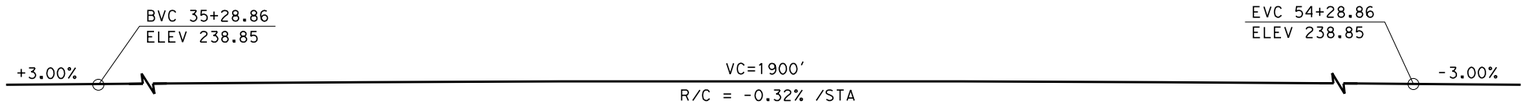


## PROFILE GRADE
NO SCALE

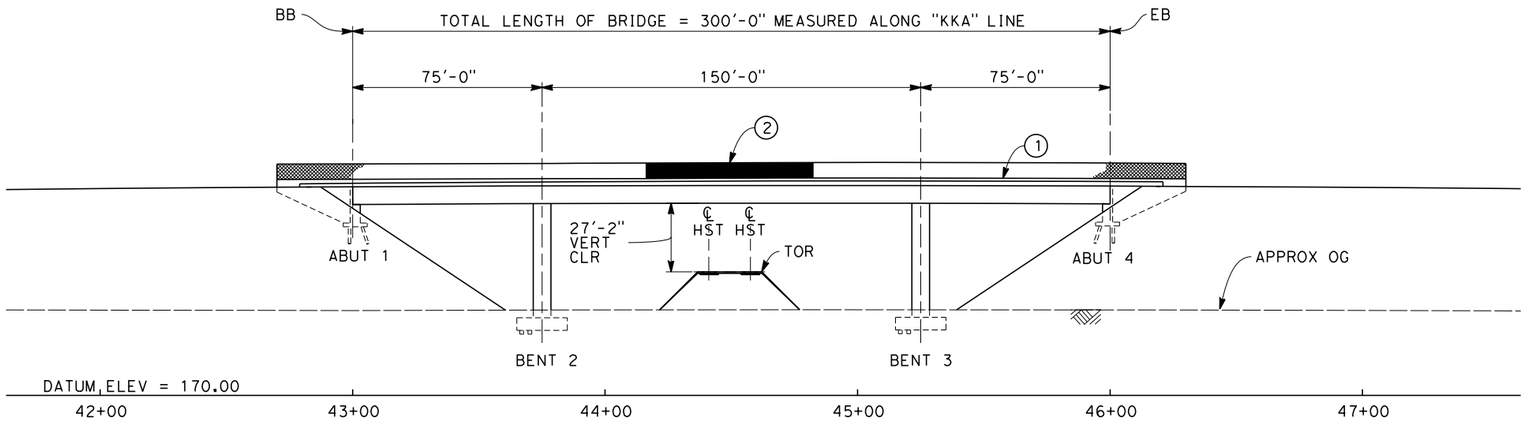


## ELEVATION
SCALE: 1"=30'

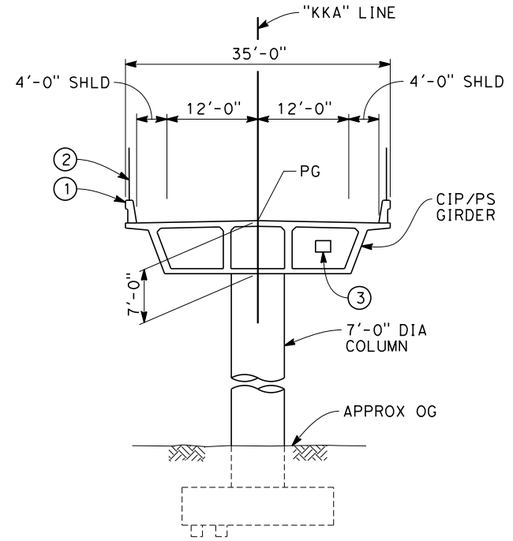


## TYPICAL SECTION
SCALE: 1"=10'

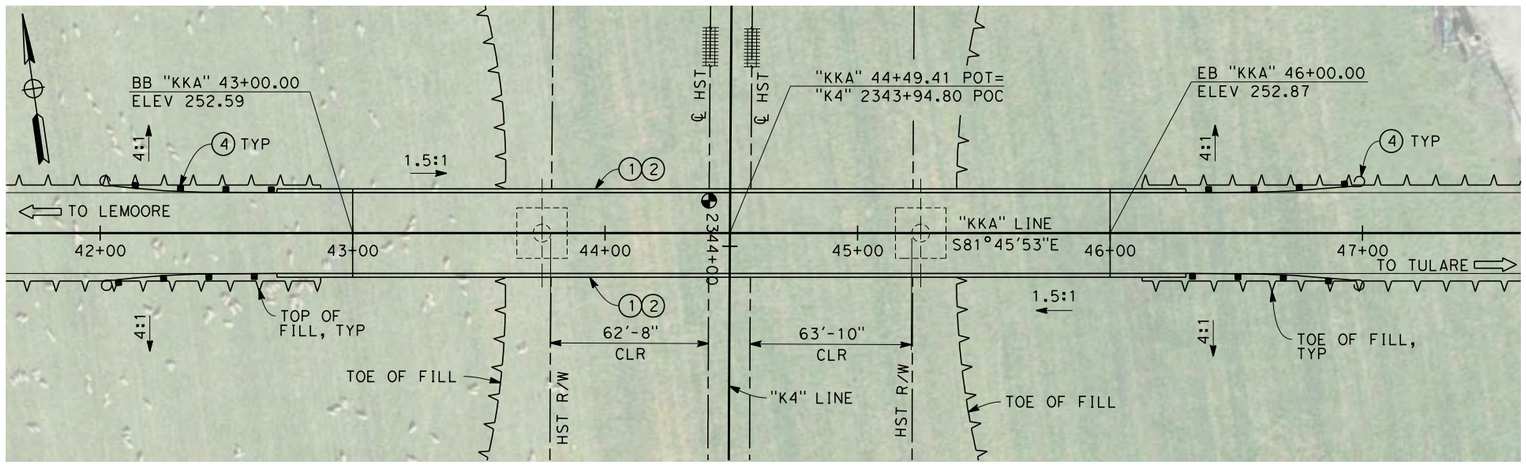


## PLAN
SCALE: 1"=30'

NOTES:

1. ALL PILES NOT SHOWN
2. FOR MINIMUM VERTICAL CLEARANCES, HORIZONTAL CURVE DATA, AND DETAILS NOT SHOWN, SEE ROADWAY PLANS.

LEGEND:

(1) CONCRETE BARRIER WITH AR FENCE
(2) AR FENCE WITH SOLID PLATE OVER HST
(3) FUTURE UTILITY ENCASEMENT OPENING
(4) MBGR

10 0 10 20 — 1"=10'
30 0 30 60 — 1"=30'

| REV | DATE | BY | CHK | APP | DESCRIPTION |
|---|---|---|---|---|---|
| | | | | | |

DESIGNED BY L. SMITH
DRAWN BY D. BARNHART
CHECKED BY M. AMINI
IN CHARGE R. COFFIN
DATE 12/31/13

**RECORD SET 15% DESIGN SUBMISSION - NOT FOR CONSTRUCTION**

URS | HMM | ARUP
CALIFORNIA HIGH-SPEED TRAIN

CALIFORNIA HIGH-SPEED RAIL AUTHORITY

**CALIFORNIA HIGH-SPEED TRAIN PROJECT**
**FRESNO TO BAKERSFIELD**
KAWEAH SUBSECTION
ALIGNMENT K4
OVERHEAD PLANNING STUDY
KANSAS AVE

CONTRACT NO. HSR 06-0003
DRAWING NO. ST2228
SCALE AS SHOWN
SHEET NO. 5 OF 5

04/02/2014 - RFP No.: HSR 13-57

12/26/2013 1:15:49 PM c:\pwworking\hmm\external\pre45072\dms91109\FB-ST-2228-K4.dgn
PRE45072

04/02/2014 - RFP No.: HSR 13-57

| REV | DATE | BY | CHK | APP | DESCRIPTION |
|---|---|---|---|---|---|

DESIGNED BY L. SMITH
DRAWN BY D. BARNHART
CHECKED BY M. AMINI
IN CHARGE R. COFFIN
DATE 12/31/13

**RECORD SET 15% DESIGN SUBMISSION - NOT FOR CONSTRUCTION**

URS | HMM | ARUP
CALIFORNIA HIGH-SPEED TRAIN

CALIFORNIA HIGH-SPEED RAIL AUTHORITY

# CALIFORNIA HIGH-SPEED TRAIN PROJECT
## FRESNO TO BAKERSFIELD
CORCORAN BYPASS SUBSECTION
ALIGNMENT C2
OVERHEAD PLANNING STUDY
KEY MAP

CONTRACT NO. HSR 06-0003
DRAWING NO. SB0075
SCALE AS SHOWN
SHEET NO. 1 OF 3

12/11/2013 11:57:10 AM c:\pwworking\hmm\external\bar59603\dms91105\FB-SB-0075-C2.dgn
BAR59603

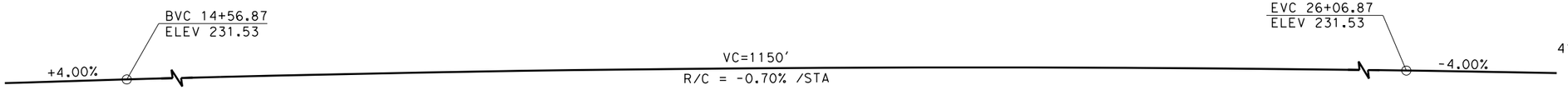


## PROFILE GRADE
NO SCALE

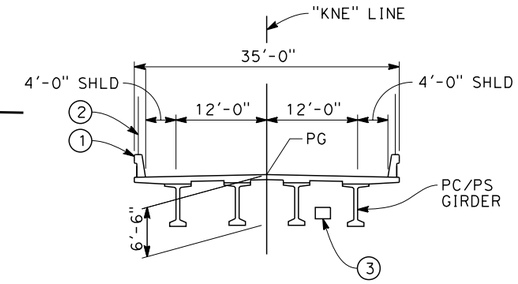


## SECTION OVER BNSF

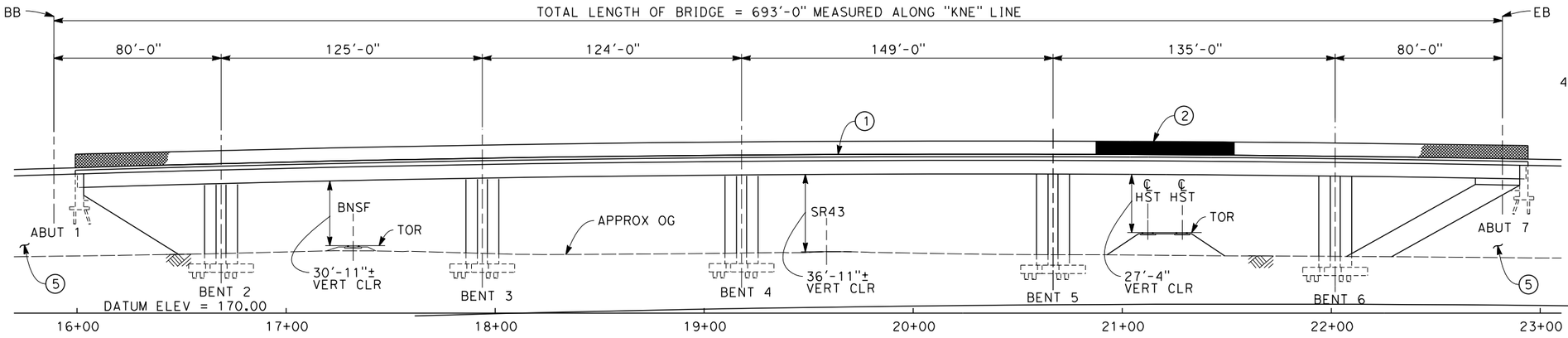


## ELEVATION
SCALE: 1"=30'

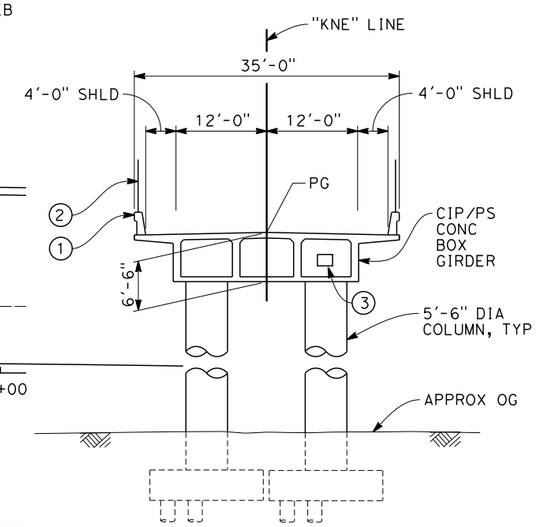


## TYPICAL SECTION
SCALE: 1"=10'

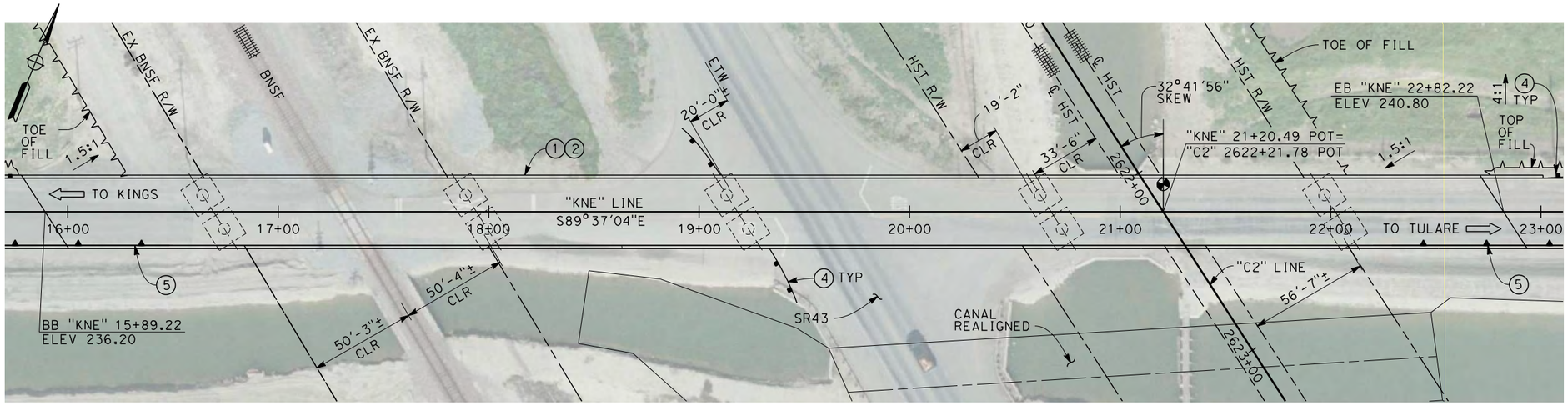


## PLAN
SCALE: 1"=30'

NOTES:

1. ALL PILES NOT SHOWN
2. FOR MINIMUM VERTICAL CLEARANCES, HORIZONTAL CURVE DATA, AND DETAILS NOT SHOWN, SEE ROADWAY PLANS.

LEGEND:

1. CONCRETE BARRIER WITH AR FENCE
2. AR FENCE WITH SOLID PLATE OVER HST
3. FUTURE UTILITY ENCASEMENT OPENING
4. MBGR
5. RETAINING WALL, TO BE DETERMINED

10 0 10 20 — 1"=10'

30 0 30 60 — 1"=30'

04/02/2014 - RFP No.: HSR 13-57

| REV | DATE | BY | CHK | APP | DESCRIPTION |
|---|---|---|---|---|---|

DESIGNED BY E. MORAN
DRAWN BY D. BARNHART
CHECKED BY M. AMINI
IN CHARGE R. COFFIN
DATE 12/31/13

RECORD SET 15% DESIGN SUBMISSION - NOT FOR CONSTRUCTION

URS | HMM | ARUP
CALIFORNIA HIGH-SPEED TRAIN

CALIFORNIA HIGH-SPEED RAIL AUTHORITY

# CALIFORNIA HIGH-SPEED TRAIN PROJECT
# FRESNO TO BAKERSFIELD
CORCORAN BYPASS SUBSECTION
ALIGNMENT C2
OVERHEAD PLANNING STUDY
NEVADA AVE

CONTRACT NO. HSR 06-0003
DRAWING NO. ST2239
SCALE AS SHOWN
SHEET NO. 2 OF 3

$USER$ $DATE$ $TIME$ $FILE$

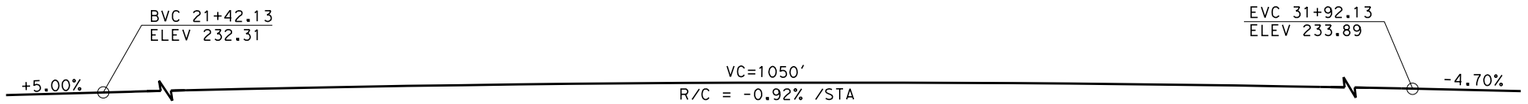


## PROFILE GRADE
NO SCALE

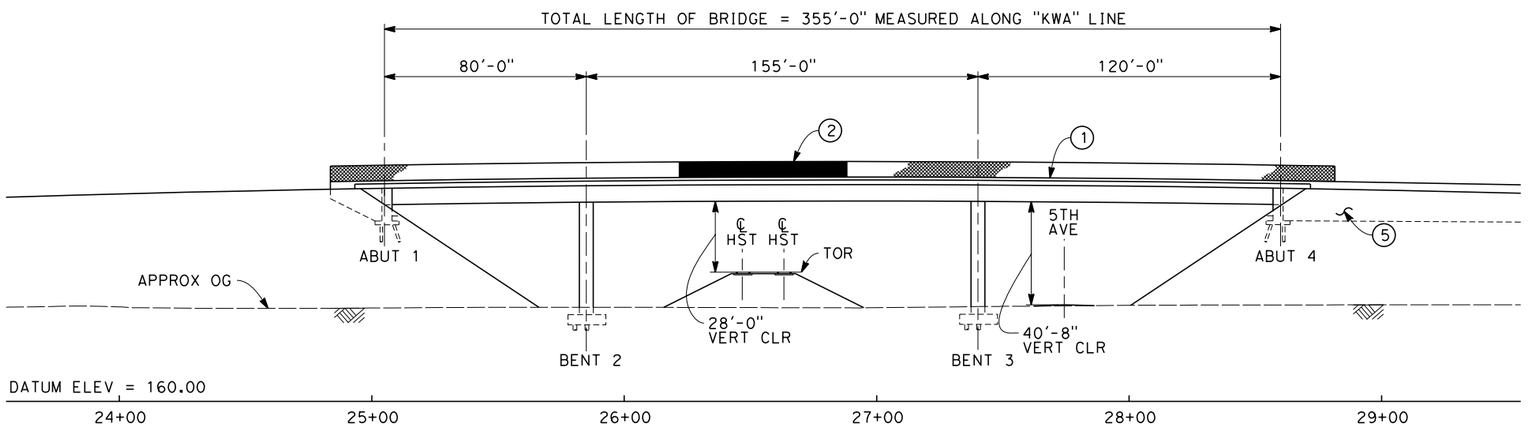


## ELEVATION
SCALE: 1"=30'

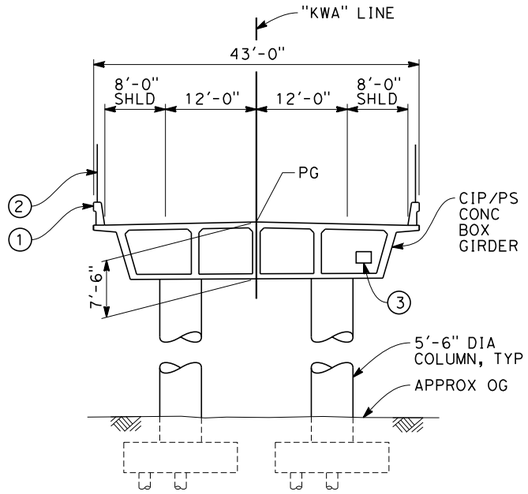


## TYPICAL SECTION
SCALE: 1"=10'

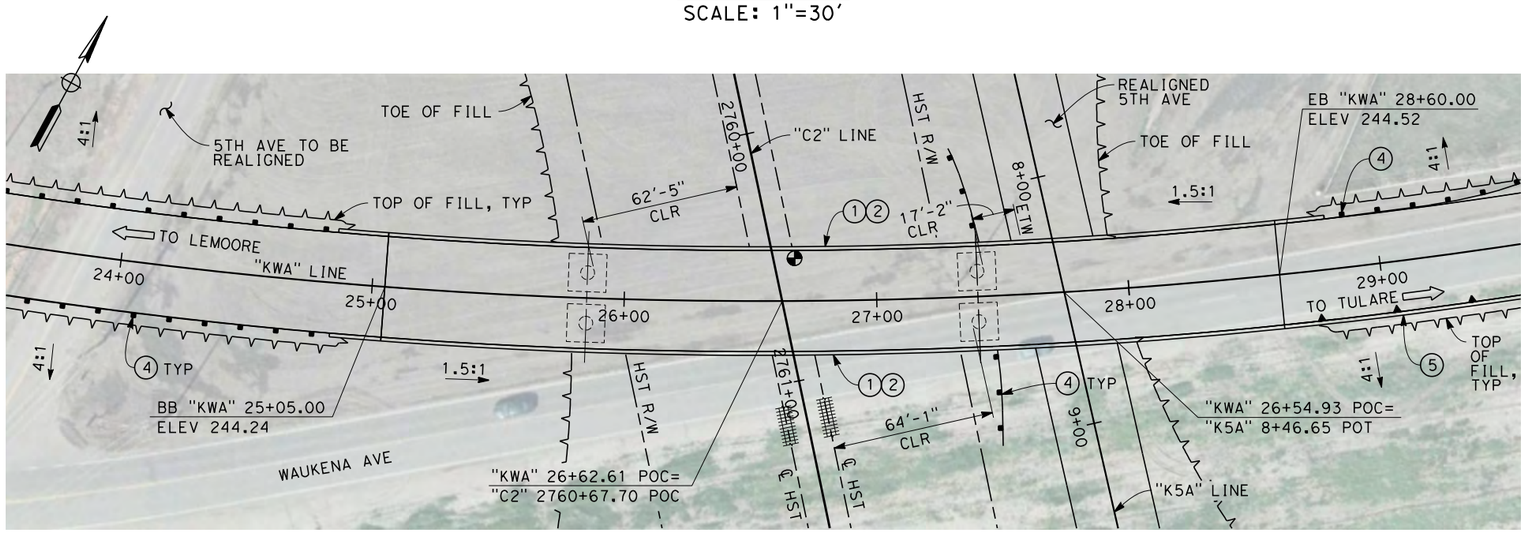


## PLAN
SCALE: 1"=30'

NOTES:

1. ALL PILES NOT SHOWN
2. FOR MINIMUM VERTICAL CLEARANCES, HORIZONTAL CURVE DATA, AND DETAILS NOT SHOWN, SEE ROADWAY PLANS.

LEGEND:

(1) CONCRETE BARRIER WITH AR FENCE
(2) AR FENCE WITH SOLID PLATE OVER HST
(3) FUTURE UTILITY ENCASEMENT OPENING
(4) MBGR
(5) RETAINING WALL, TYPE TO BE DETERMINED

10 0 10 20 — 1"=10'
30 0 30 60 — 1"=30'

04/02/2014 - RFP No.: HSR 13-57

| REV | DATE | BY | CHK | APP | DESCRIPTION |
|---|---|---|---|---|---|

DESIGNED BY E. MORAN
DRAWN BY D. BARNHART
CHECKED BY M. AMINI
IN CHARGE R. COFFIN
DATE 12/31/13

RECORD SET 15% DESIGN SUBMISSION - NOT FOR CONSTRUCTION

URS | HMM | ARUP
CALIFORNIA HIGH-SPEED TRAIN

CALIFORNIA HIGH-SPEED RAIL AUTHORITY

# CALIFORNIA HIGH-SPEED TRAIN PROJECT
# FRESNO TO BAKERSFIELD
CORCORAN BYPASS SUBSECTION
ALIGNMENT C2
OVERHEAD PLANNING STUDY
CORCORAN HWY

CONTRACT NO. HSR 06-0003
DRAWING NO. ST2244
SCALE AS SHOWN
SHEET NO. 3 OF 3

12/27/2013 10:21:32 AM c:\pwworking\hmm\external\pro39009\dms91105\VFB-ST-2244-C2.dgn Clark

04/02/2014 - RFP No.: HSR 13-57

| REV | DATE | BY | CHK | APP | DESCRIPTION |
|---|---|---|---|---|---|

DESIGNED BY B. LUSCOMBE
DRAWN BY D. BARNHART
CHECKED BY E. MORAN
IN CHARGE R. COFFIN
DATE 12/31/13

**RECORD SET 15% DESIGN SUBMISSION - NOT FOR CONSTRUCTION**

URS | HMM | ARUP
California High-Speed Train

CALIFORNIA HIGH-SPEED RAIL AUTHORITY

# CALIFORNIA HIGH-SPEED TRAIN PROJECT
# FRESNO TO BAKERSFIELD
PIXLEY SUBSECTION
ALIGNMENT P
OVERHEAD PLANNING STUDY
KEY MAP

CONTRACT NO. HSR 06-0003
DRAWING NO. SB0090
SCALE AS SHOWN
SHEET NO. 1 OF 5

12/27/2013 11:40:53 AM CAHSRP-r1.tbl CHSR_PDF_half_black_2007.ctb bar59603 \\dms95080\VFB-SB-0090-P.dgn

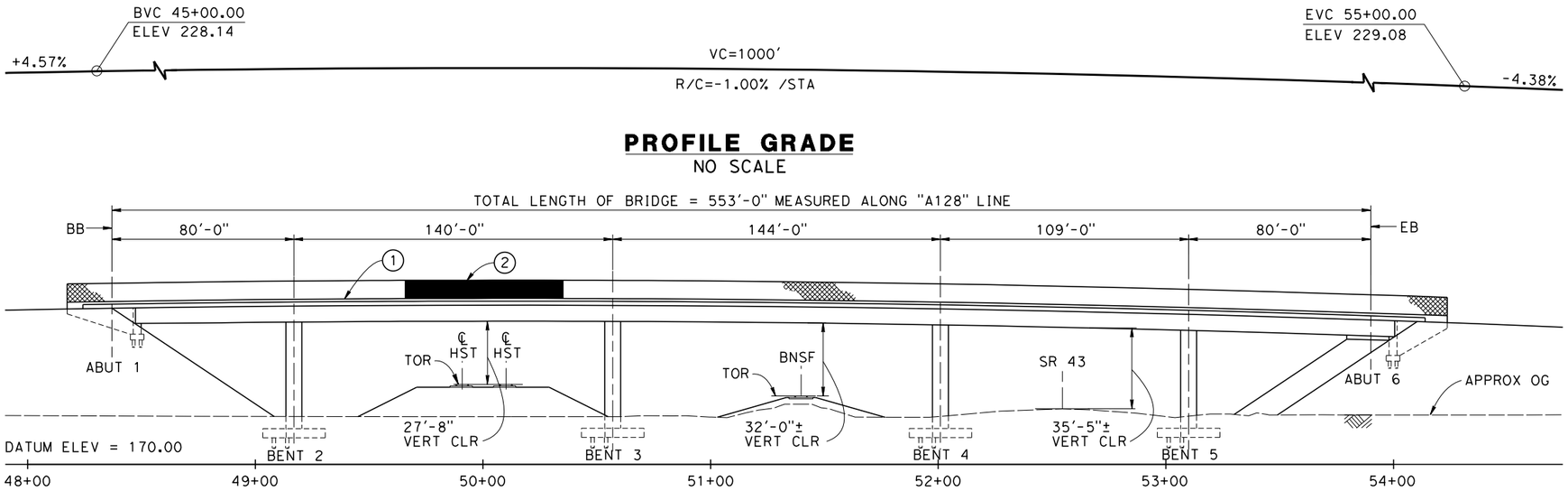


## PROFILE GRADE
NO SCALE

## ELEVATION
SCALE:1"=30'

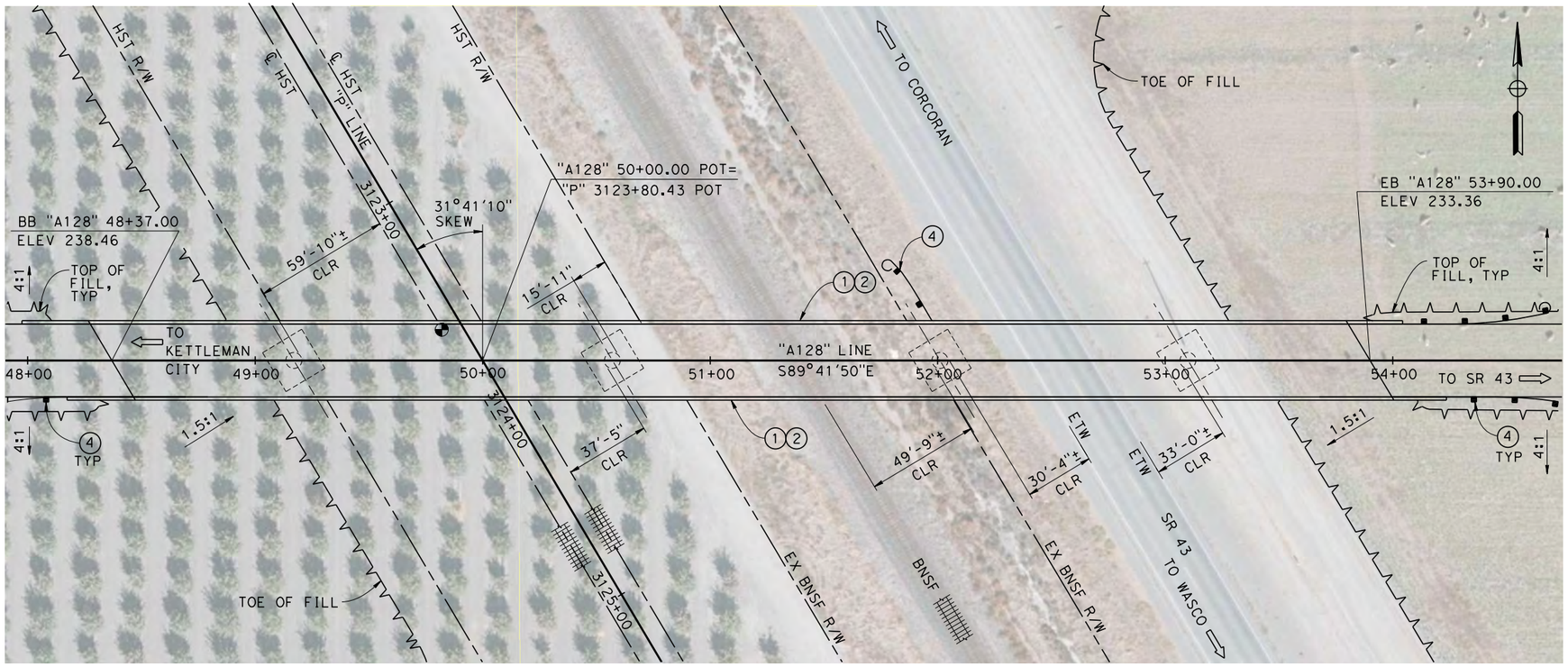


## PLAN
SCALE:1"=30'

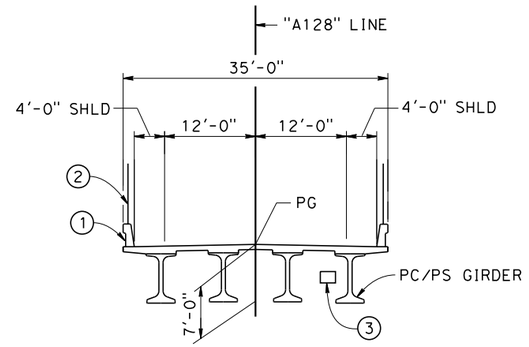


SECTION OVER BNSF

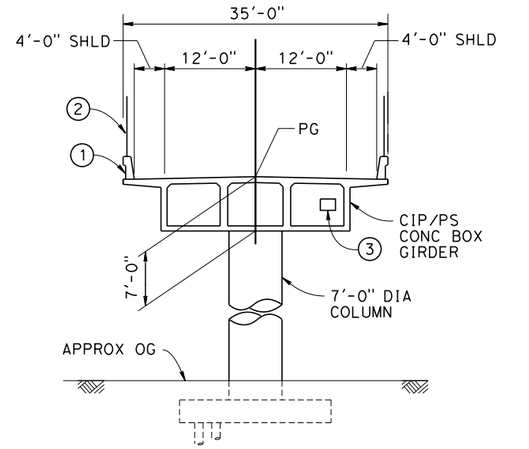


## TYPICAL SECTIONS
SCALE:1"=10'

NOTES:
1. ALL PILES NOT SHOWN
2. FOR MINIMUM VERTICAL CLEARANCES, HORIZONTAL CURVE DATA, AND DETAILS NOT SHOWN, SEE ROADWAY PLANS.

LEGEND:
1. CONCRETE BARRIER WITH AR FENCE
2. AR FENCE WITH SOLID PLATE OVER HST
3. FUTURE UTILITY ENCASEMENT OPENING
4. MBGR

10 0 10 20 — SCALE: 1"=10'

30 0 30 60 — SCALE: 1"=30'

04/02/2014 - RFP No.: HSR 13-57

| REV | DATE | BY | CHK | APP | DESCRIPTION |
|---|---|---|---|---|---|

DESIGNED BY B. LUSCOMBE
DRAWN BY D. BARNHART
CHECKED BY E. MORAN
IN CHARGE R. COFFIN
DATE 12/31/13

RECORD SET 15% DESIGN SUBMISSION - NOT FOR CONSTRUCTION

URS | HMM | ARUP
CALIFORNIA HIGH-SPEED TRAIN

CALIFORNIA HIGH-SPEED RAIL AUTHORITY

# CALIFORNIA HIGH-SPEED TRAIN PROJECT
# FRESNO TO BAKERSFIELD
PIXLEY SUBSECTION
ALIGNMENT P
OVERHEAD PLANNING STUDY
AVE 128

CONTRACT NO. HSR 06-0003
DRAWING NO. ST2401
SCALE AS SHOWN
SHEET NO. 2 OF 5

BAR50597 12/20/2013 8:01:48 AM CAHSRP-r1.tbl CHSR_PDF_half_black.plt c:\pwworking\hmm\external\bar50597\dms95080\FB-ST-2401-P.dgn

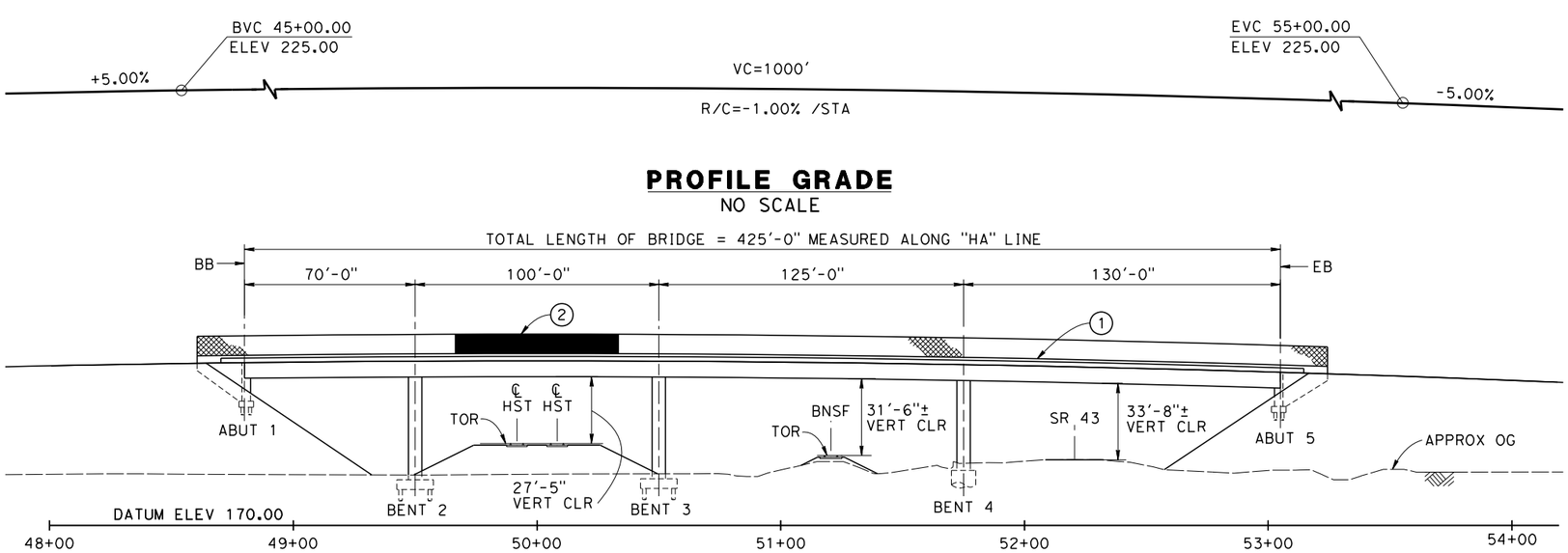


## PROFILE GRADE
NO SCALE

## ELEVATION
SCALE:1"=30'

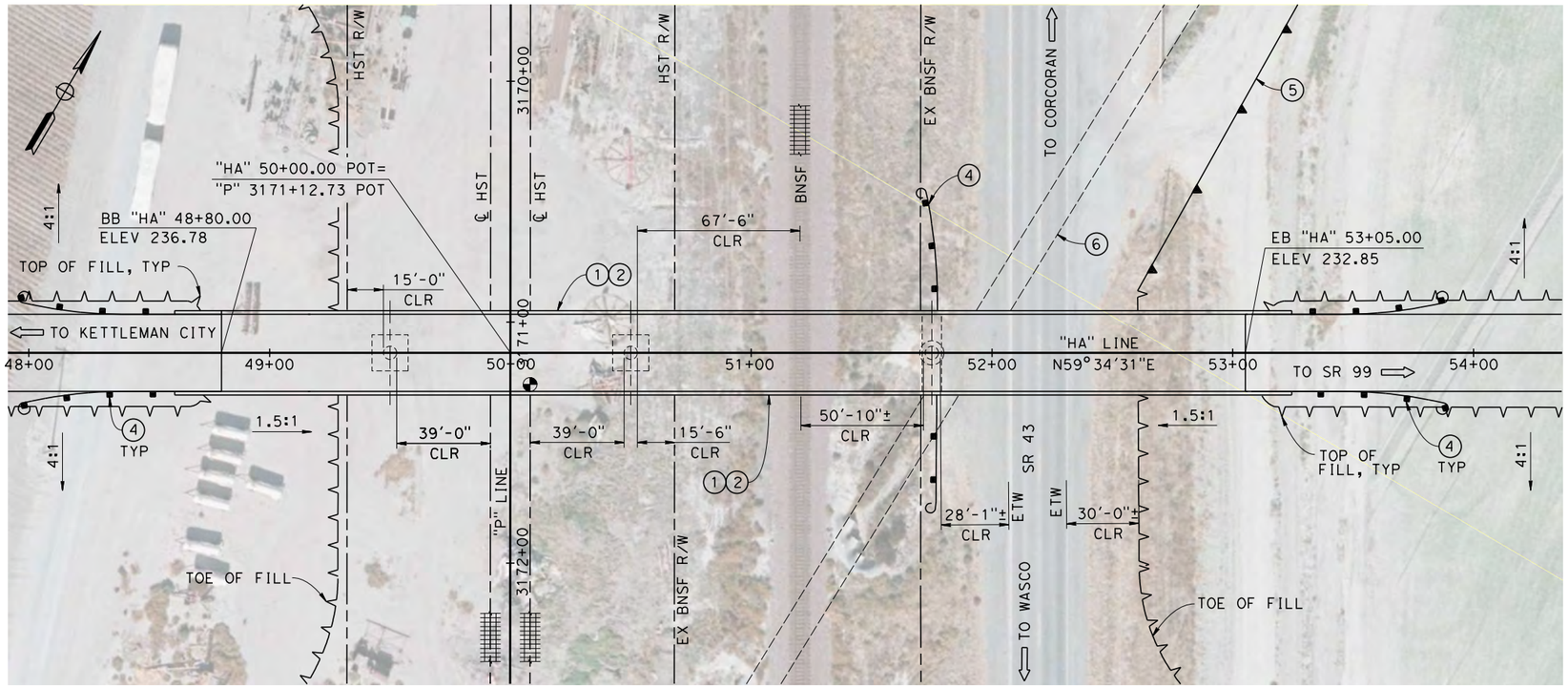


## PLAN
SCALE:1"=30'

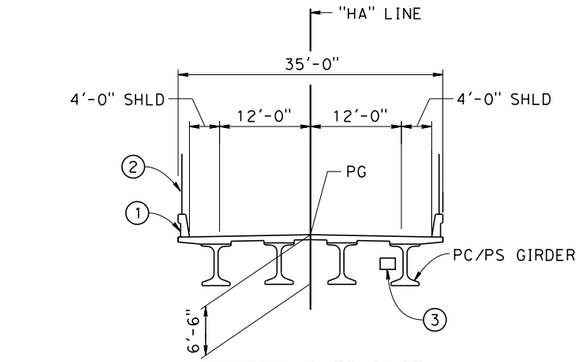


SECTION OVER BNSF

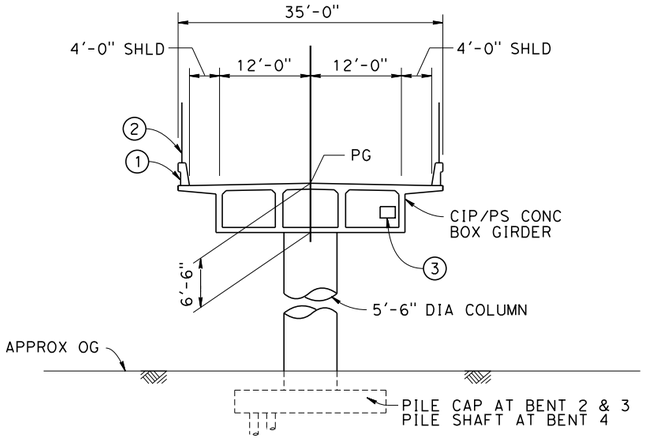


## TYPICAL SECTIONS
SCALE:1"=10'

NOTES:
1. ALL PILES NOT SHOWN
2. FOR MINIMUM VERTICAL CLEARANCES, HORIZONTAL CURVE DATA, AND DETAILS NOT SHOWN, SEE ROADWAY PLANS.

LEGEND:
1. CONCRETE BARRIER WITH AR FENCE
2. AR FENCE WITH SOLID PLATE OVER HST
3. FUTURE UTILITY ENCASEMENT OPENING
4. MBGR
5. RETAINING WALL
6. EXISTING CULVERT

10 0 10 20 — SCALE: 1"=10'

30 0 30 60 — SCALE: 1"=30'

04/02/2014 - RFP No.: HSR 13-57

| REV | DATE | BY | CHK | APP | DESCRIPTION |
|---|---|---|---|---|---|

DESIGNED BY B. LUSCOMBE
DRAWN BY D. BARNHART
CHECKED BY E. MORAN
IN CHARGE R. COFFIN
DATE 12/31/13

RECORD SET 15% DESIGN SUBMISSION - NOT FOR CONSTRUCTION

URS | HMM | ARUP
CALIFORNIA HIGH-SPEED TRAIN

CALIFORNIA HIGH-SPEED RAIL AUTHORITY

**CALIFORNIA HIGH-SPEED TRAIN PROJECT**
**FRESNO TO BAKERSFIELD**
PIXLEY SUBSECTION
ALIGNMENT P
OVERHEAD PLANNING STUDY
HESSE AVE

CONTRACT NO. HSR 06-0003
DRAWING NO. ST2411
SCALE AS SHOWN
SHEET NO. 3 OF 5

BAR50597 12/23/2013 10:59:28 AM CAHSRP-r1.tbl CHSR_PDF_half_black.pltc: \pwworking\hmm\external\bar50597\dms95080\FB-ST-2411-P.dgn

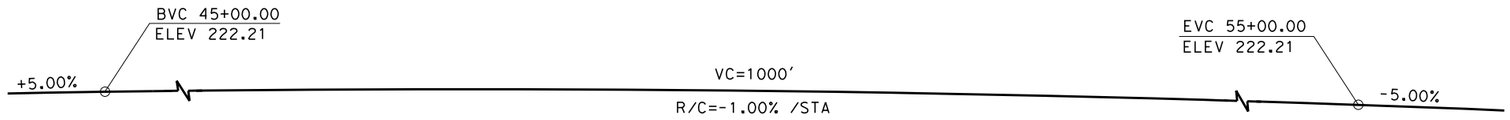


## PROFILE GRADE
NO SCALE

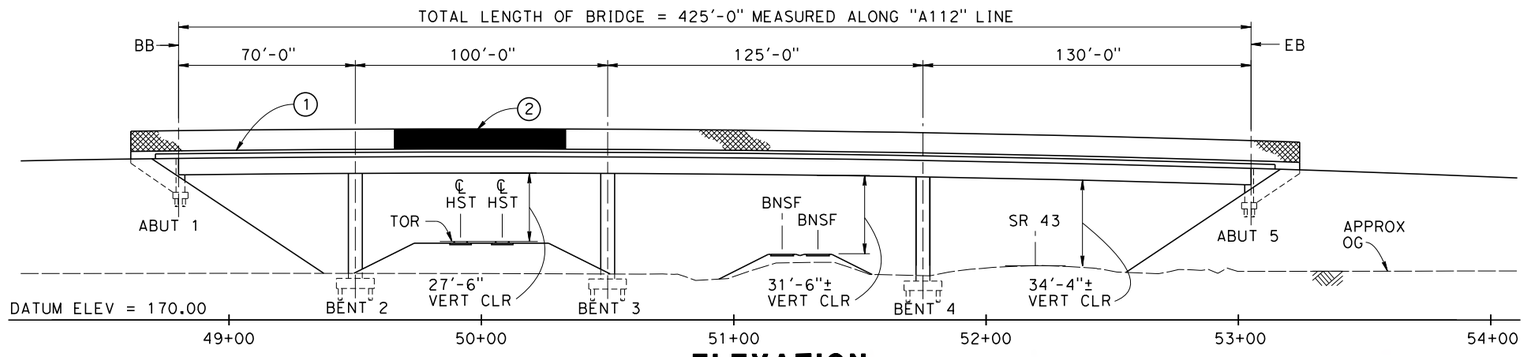


## ELEVATION
SCALE:1"=30'

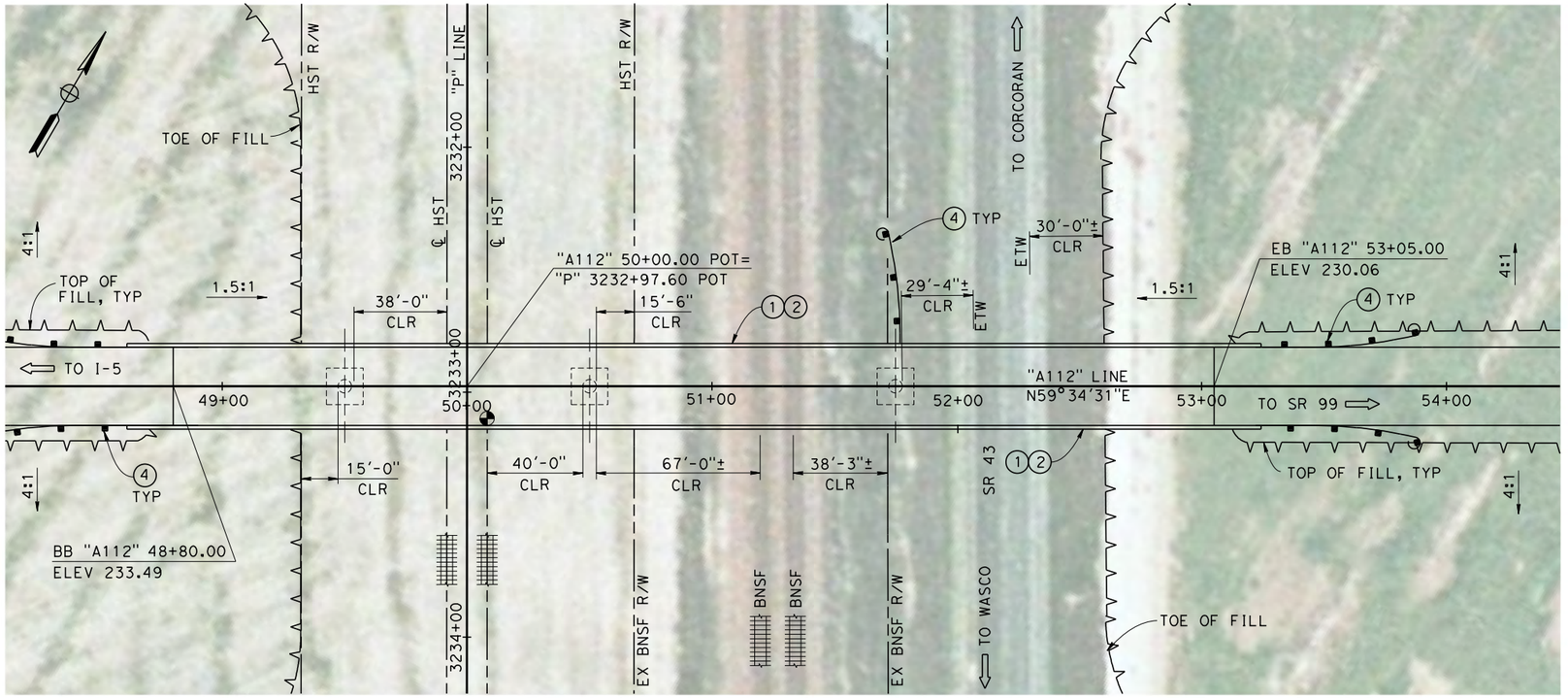


## PLAN
SCALE:1"=30'

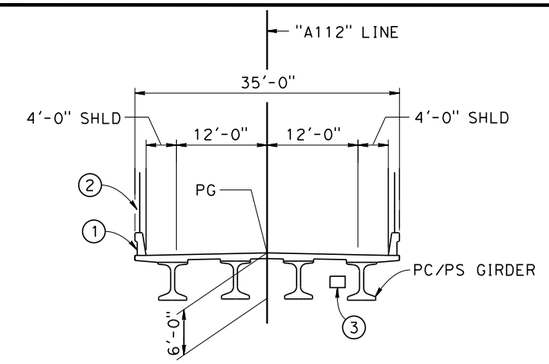


SECTION OVER BNSF

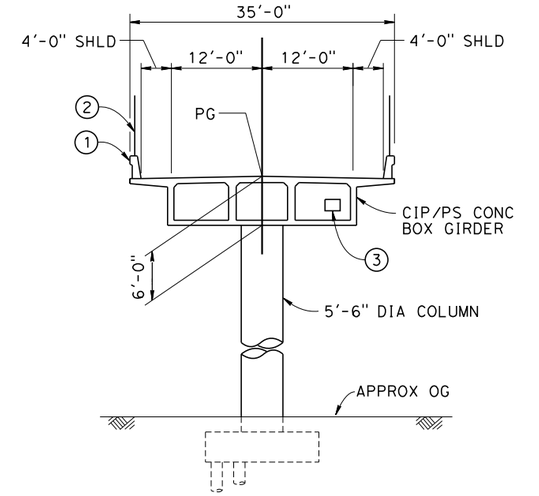


## TYPICAL SECTIONS
SCALE:1"=10'

NOTES:

1. ALL PILES NOT SHOWN
2. FOR MINIMUM VERTICAL CLEARANCESS, HORIZONTAL CURVE DATA, AND DETAILS NOT SHOWN, SEE ROADWAY PLANS.

LEGEND:

(1) CONCRETE BARRIER WITH AR FENCE
(2) AR FENCE WITH SOLID PLATE OVER HST
(3) FUTURE UTILITY ENCASEMENT OPENING
(4) MBGR

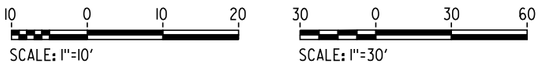


| REV | DATE | BY | CHK | APP | DESCRIPTION |
|---|---|---|---|---|---|
| | | | | | |

DESIGNED BY B. LUSCOMBE
DRAWN BY D. BARNHART
CHECKED BY E. MORAN
IN CHARGE R. COFFIN
DATE 12/31/13

**RECORD SET 15% DESIGN SUBMISSION - NOT FOR CONSTRUCTION**

URS | HMM | ARUP
CALIFORNIA HIGH-SPEED TRAIN

CALIFORNIA
HIGH-SPEED RAIL AUTHORITY

**CALIFORNIA HIGH-SPEED TRAIN PROJECT**
**FRESNO TO BAKERSFIELD**
PIXLEY SUBSECTION
ALIGNMENT P
OVERHEAD PLANNING STUDY
AVE 112

CONTRACT NO. HSR 06-0003
DRAWING NO. ST2421
SCALE AS SHOWN
SHEET NO. 4 OF 5

04/02/2014 - RFP No.: HSR 13-57

12/20/2013 8:04:15 AM CAHSRP-r1.tbl CHSR_PDF_half_black.plt c:\pwworking\hmm\external\bar50597\dms95080\VFB-ST-2421-P.dgn
BAR50597

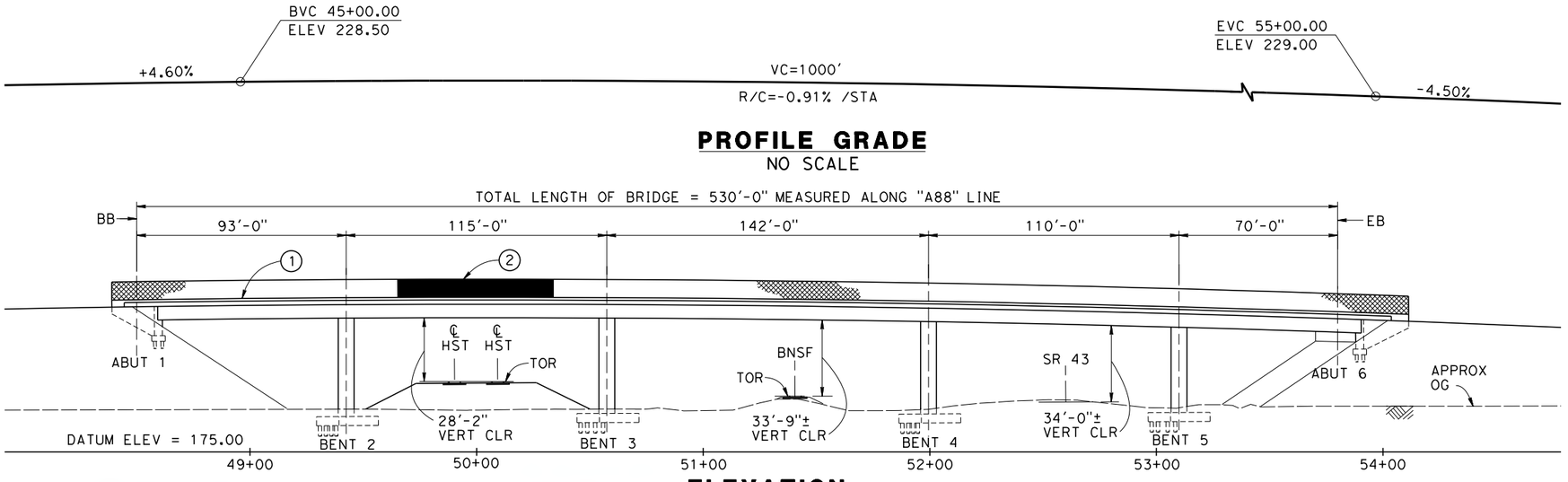


## PROFILE GRADE
NO SCALE




## ELEVATION
SCALE:1"=30'

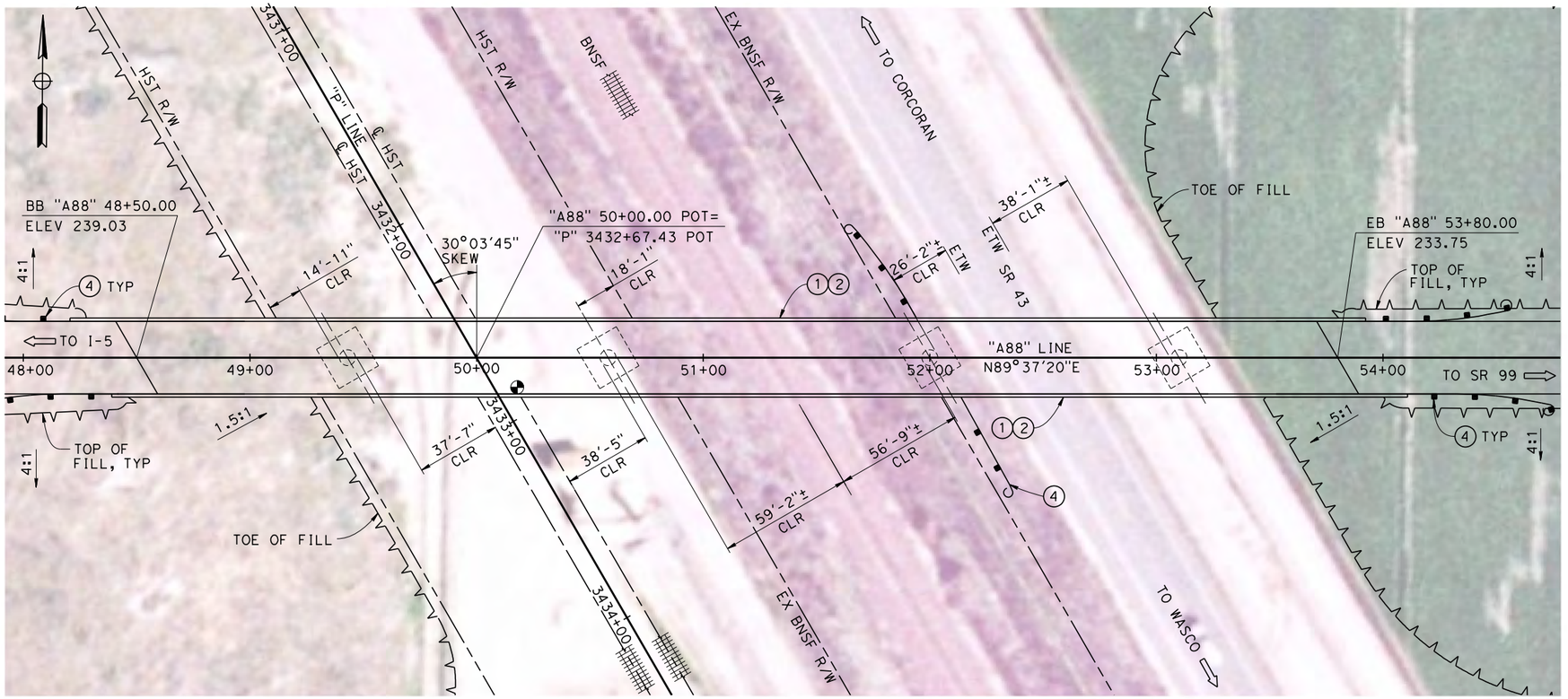


## PLAN
SCALE:1"=30'

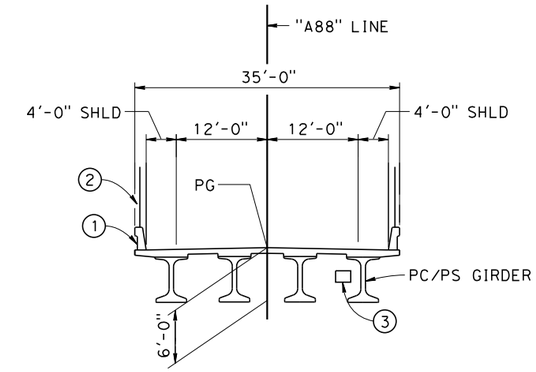


SECTION OVER BNSF

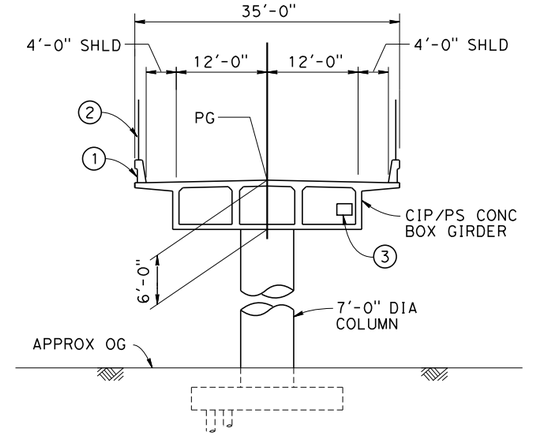


## TYPICAL SECTIONS
SCALE:1"=10'

NOTES:

1. ALL PILES NOT SHOWN
2. FOR MINIMUM VERTICAL CLEARANCESS, HORIZONTAL CURVE DATA, AND DETAILS NOT SHOWN, SEE ROADWAY PLANS.

LEGEND:

(1) CONCRETE BARRIER WITH AR FENCE
(2) AR FENCE WITH SOLID PLATE OVER HST
(3) FUTURE UTILITY ENCASEMENT OPENING
(4) MBGR

10 0 10 20 — SCALE: 1"=10'

30 0 30 60 — SCALE: 1"=30'

| REV | DATE | BY | CHK | APP | DESCRIPTION |
|---|---|---|---|---|---|

DESIGNED BY B. LUSCOMBE
DRAWN BY D. BARNHART
CHECKED BY E. MORAN
IN CHARGE R. COFFIN
DATE 12/31/13

**RECORD SET 15% DESIGN SUBMISSION - NOT FOR CONSTRUCTION**

URS | HMM | ARUP
CALIFORNIA HIGH-SPEED TRAIN

CALIFORNIA HIGH-SPEED RAIL AUTHORITY

**CALIFORNIA HIGH-SPEED TRAIN PROJECT**
**FRESNO TO BAKERSFIELD**
PIXLEY SUBSECTION
ALIGNMENT P
OVERHEAD PLANNING STUDY
AVE 88

CONTRACT NO. HSR 06-0003
DRAWING NO. ST2431
SCALE AS SHOWN
SHEET NO. 5 OF 5

04/02/2014 - RFP No.: HSR 13-57

12/23/2013 10:54:46 AM CAHSRP-r1.tbl CHSR_PDF_half_black.pltc \\pwworking\hmm\external\bar50597\dms95080\FB-ST-2431-P.dgn
BAR50597

04/02/2014 - RFP No.: HSR 13-57

| REV | DATE | BY | CHK | APP | DESCRIPTION |
|---|---|---|---|---|---|
| | | | | | |

DESIGNED BY E. MORAN
DRAWN BY D. BARNHART
CHECKED BY L. SMITH
IN CHARGE R. COFFIN
DATE 02/04/14

RECORD SET 15% DESIGN SUBMISSION - NOT FOR CONSTRUCTION

URS | HMM | ARUP
CALIFORNIA HIGH-SPEED TRAIN

CALIFORNIA HIGH-SPEED RAIL AUTHORITY

# CALIFORNIA HIGH-SPEED TRAIN PROJECT
## FRESNO TO BAKERSFIELD
ALLENSWORTH BYPASS SUBSECTION
ALIGNMENT A1
OVERHEAD PLANNING STUDY
KEY MAP

CONTRACT NO. HSR 06-0003
DRAWING NO. SB0100
SCALE AS SHOWN
SHEET NO. 1 OF 5

BAR59603 1/27/2014 11:18:25 AM CAHSRP-r1.tbl CHSR_PDF_half_black_20x30.pltcfg \\bar59603\xd0178697\FB-SB-0100-A1.dgn

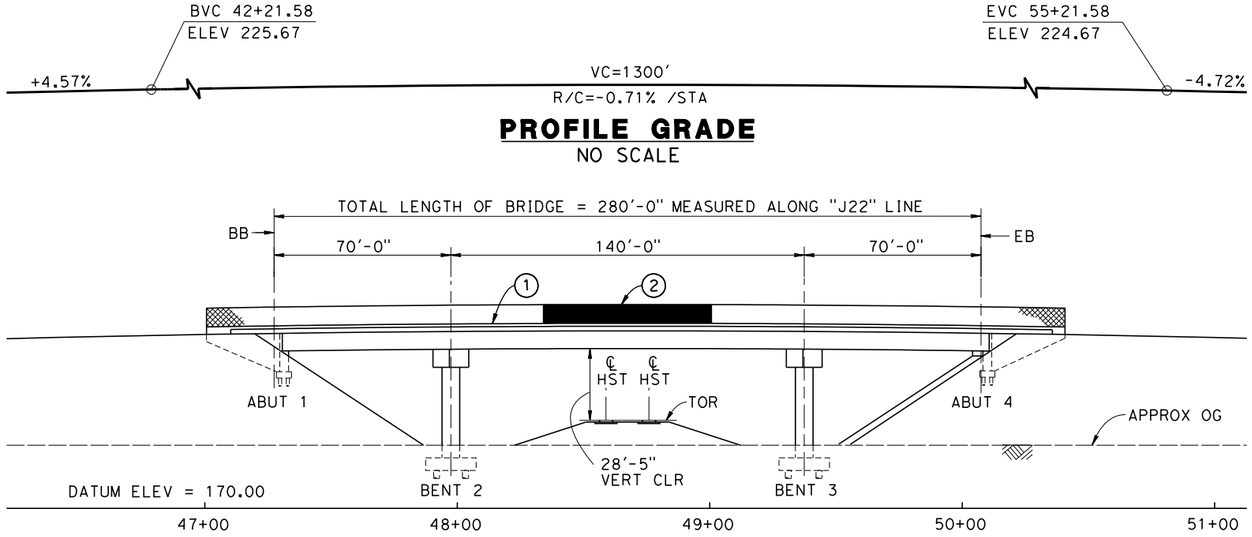


## PROFILE GRADE
NO SCALE

## ELEVATION
SCALE:1"=30'

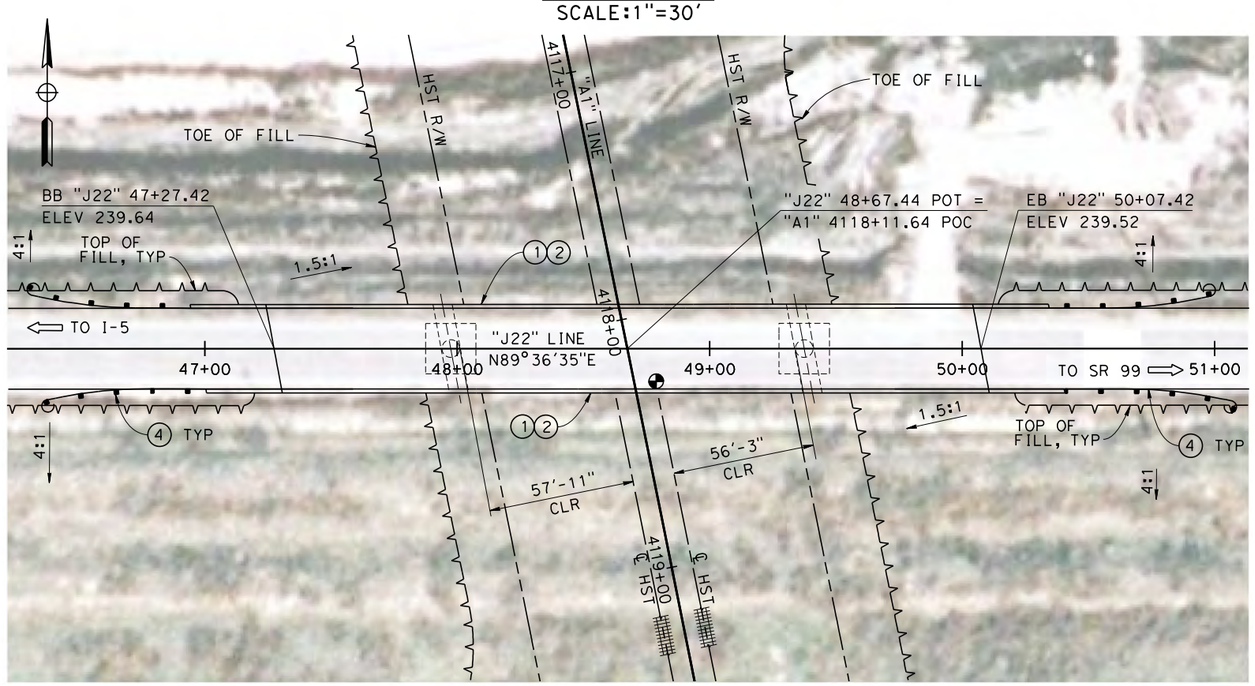


## PLAN
SCALE:1"=30'

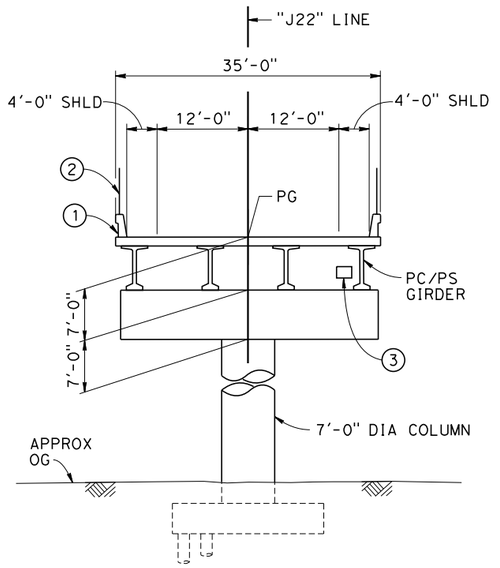


## TYPICAL SECTION
SCALE:1"=10'

NOTES:
1. ALL PILES NOT SHOWN
2. FOR MINIMUM VERTICAL CLEARANCES, HORIZONTAL CURVE DATA, AND DETAILS NOT SHOWN, SEE ROADWAY PLANS.

LEGEND:
1. (1) CONCRETE BARRIER WITH AR FENCE
2. (2) AR FENCE WITH SOLID PLATE OVER HST
3. (3) FUTURE UTILITY ENCASEMENT OPENING
4. (4) MBGR

10 0 10 20 — SCALE: 1"=10'

30 0 30 60 — SCALE: 1"=30'

04/02/2014 - RFP No.: HSR 13-57

| REV | DATE | BY | CHK | APP | DESCRIPTION |
|---|---|---|---|---|---|

DESIGNED BY E. MORAN
DRAWN BY D. BARNHART
CHECKED BY L. SMITH
IN CHARGE R. COFFIN
DATE 12/31/13

**RECORD SET 15% DESIGN SUBMISSION - NOT FOR CONSTRUCTION**

URS | HMM | ARUP
CALIFORNIA HIGH-SPEED TRAIN

CALIFORNIA
HIGH-SPEED RAIL AUTHORITY

**CALIFORNIA HIGH-SPEED TRAIN PROJECT**
**FRESNO TO BAKERSFIELD**
ALLENSWORTH BYPASS SUBSECTION
ALIGNMENT A1
OVERHEAD PLANNING STUDY
COUNTY RD J22

CONTRACT NO. HSR 06-0003
DRAWING NO. ST2501
SCALE AS SHOWN
SHEET NO. 2 OF 5

12/20/2013 7:33:26 AM CAHSRP-r1.tbl CHSR_PDF_half_block.pltc: \pwworking\hmm\external\bar50597\dms72594\VFB-ST-2501-A1.dgn BAR50597