CALIFORNIA HIGH-SPEED TRAIN

Project Environmental Impact Report/Environmental Impact Statement

PROJECT ENVIRONMENTAL ANALYSIS METHODOLOGY GUIDELINES

VERSION 4

September 2010

Prepared for:

California High-Speed Rail Authority

U.S. Department of Transportation
Federal Railroad Administration

California High-Speed Train Project EIR/EIS

CALIFORNIA
High-Speed Rail Authority

Project Environmental Analysis Methodology Guidelines

Prepared By: _____ 10/1/2010
Irena Finkelstein, Senior Environmental Manager

Checked By: _____ 10/12/2010
Bryan Porter, Senior Environmental Manager

Approved By: _____ 11/17/2010
Ann Koby, PMT Environmental Manager

Released By: _____ 23 Dec 2010
Hans van Winkle, PMT Program Director

Reviewed By: _____ 1/11/2011
Dan Leavitt, Deputy Director, CHSRA

Accepted By: _____ 1/15/2011
Roelof van Ark, Executive Director, CHSRA

Revision	Date	Description
0	Feb 07	Initial Release
1	04 Feb 08	PMT, Authority, FRA, and AG Comments Incorporated
2	17 Feb 09	PMT, Authority, FRA, and AG Comments Incorporated
3	Apr 2009	PMT, Authority, FRA, and AG Comments Incorporated
4	Sept 2010	PMT, Authority, FRA, and AG Comments Incorporated

Table of Contents

1 INTRODUCTION 1

2 PURPOSE OF THESE METHODOLOGY GUIDELINES 2

3 ORGANIZATION OF THIS REPORT 3

3.1 DESCRIPTION OF PROJECT ALTERNATIVES 3

3.1.1 No Project Alternative 3

3.1.2 High-Speed Train Alternative 4

3.2 INFORMATION TO BE PROVIDED TO ANALYSTS 4

3.2.1 Alignment Plans and Profiles 4

3.2.2 Typical Cross-Section Drawings 4

3.2.3 Station Plans and Profiles 4

3.2.4 Storage, Vehicle Maintenance, and Maintenance of Way Facilities 5

3.2.5 Operational Assumptions 5

3.3 REVISIONS FROM PREVIOUS VERSION 5

4 ENVIRONMENTAL METHODOLOGY GUIDELINES 9

APPENDICES (REFER TO ACCOMPANYING CD)

A. METHODOLOGY GUIDELINES, VERSION 4, JUNE 2010
B. 2005 STATEWIDE PROGRAM CEQA FINDINGS OF FACT
C. 2005 MITIGATION MONITORING AND REPORTING PLAN
D. 2005 FEDERAL RAILROAD ADMINISTRATION RECORD OF DECISION
E. 2010 REVISED BAY AREA TO CENTRAL VALLEY CEQA FINDINGS OF FACT & RESOLUTION # HSRA 11-11
F. 2010 MITIGATION MONITORING AND REPORTING PLAN
G. 2008 BAY AREA TO CENTRAL VALLEY FEDERAL RAILROAD ADMINISTRATION RECORD OF DECISION
H. TECHNICAL REPORT ORGANIZATION AND FORMAT INSTRUCTIONS
I. QUALITY CONTROL PLAN (REVISED 2010)
J. CEQA THRESHOLDS OF SIGNIFICANCE

Project Environmental Analysis Methodology Guidelines

1.0 INTRODUCTION

The California High-Speed Train Project Environmental Analysis Methodologies were issued by the California High-Speed Rail Authority (the Authority) in February 2008 and updated and reissued in February 2009 as *Project-Level Environmental Analysis Methodologies, Version 2*, which is available on the Authority's web site at http://www.cahighspeedrail.ca.gov/images/chsr/20090317155703_HSTProjectEnvMethodologiesV2Feb1709.pdf

During 2009, the Authority selected regional consultants for the remaining 8 of the 10 high-speed train (HST) sections comprising the 800-mile system. Version 2 was reviewed by the HST section regional consultants, California Department of Transportation (Caltrans), and environmental resource agencies. The methods were updated, producing Version 3, which was not issued because additional comments were received by the Authority's project management oversight consultant in 2010. Updates and revisions were incorporated, producing this document, *Project Environmental Analysis Methodology Guidelines, Version 4*.

The California High-Speed Train Program consists of a more than 800-mile-long HST system capable of speeds exceeding 200 miles per hour (mph) on a dedicated, fully grade-separated track with state-of-the-art safety, signaling, and automated train control systems. The system is designed to connect and serve the major metropolitan centers of California, extending from Sacramento and the San Francisco Bay Area, through the Central Valley, to Los Angeles and San Diego. The HST system is projected to carry 41 million passengers annually by the year 2035.

In 2005, the Authority and the Federal Rail Administration (FRA) completed the *Final Statewide Program Environmental Impact Report/Environmental Impact Statement for the Proposed California High Speed Train (HST) System* (Final Statewide Program EIR/EIS), as the first-phase of a tiered environmental review process. The Final Statewide Program EIR/EIS established the purpose and need for the HST system, analyzed an HST alternative, compared the HST alternative to No Project/No Action and Modal Alternatives, and evaluated several corridor and station options.

The Authority certified the Final Statewide Program EIR/EIS under the California Environmental Quality Act (CEQA), selected the proposed HST system alternative for further project-level environmental review over the No Project/No Action and Modal Alternatives, and made several corridor decisions. The Authority also issued a Notice of Determination and CEQA Findings of Fact in November 2005 (Appendix A) and adopted a Mitigation Monitoring and Reporting Plan (MMRP) (Appendix B). The FRA issued a Record of Decision (ROD) under the National Environmental Policy (NEPA) on November 18, 2005 (Appendix C).

In 2008, the Authority and FRA completed a second program EIR/EIS to evaluate and select general alignments and station locations within the corridor (between and including the Altamont Pass and the Pacheco Pass) to connect the San Francisco Bay Area and Central Valley portions of the HST system. The Authority and FRA selected the Pacheco Pass with the San Francisco and San Jose Termini network alternative, as well as preferred corridor alignments and station location options. The Authority issued a Notice of Determination and CEQA Findings of Fact and an MMRP, while the FRA issued a ROD in November 2008 (Appendix F).

Following completion of the document, the Authority undertook additional work on the program EIR/EIS for the Bay Area to Central Valley portions of the HST system to comply with a final court ruling in the

Town of Atherton litigation. The court ruling allowed the Authority to continue its project EIR/EIS while making the necessary corrections to the program EIR/EIS.

In early 2010, the Authority circulated the revisions to the program EIR/EIS and issued a new decision to select a network alternative, alignments, and station locations to be studied at the project level. In September 2010, the Authority issued a new CEQA Findings of Facts (Appendix D) and an MMRP (Appendix E).

The Authority and FRA are now undertaking second-tier, project environmental evaluations for all HST sections. The project EIR/EIS documents will satisfy the environmental review requirements of state and federal laws and will enable the public and agencies to participate in the review of site-specific alternatives, as well as to help define appropriate project-level mitigation measures to minimize and mitigate adverse impacts from the 2005 and 2010 CEQA Findings of Fact (Appendix A and D) the 2005 and 2008 RODs (Appendix C and F) for the statewide EIR/EISs. The information in the project environmental documents will be used to decide alignments, stations, and facilities locations to serve the HST system and to seek permits and other needed approvals. The project-level environmental analysis will reference and use one or both of the program EIR/EISs to ensure consistency with previous decisions and guidance provided by the Authority and the FRA. In particular, relevant mitigation strategies for impacts identified at the program-level CEQA Findings of Fact and the ROD will be addressed in each project EIR/EIS.

The Authority is both the project sponsor and the lead agency under CEQA. The Authority has determined that project EIR/EISs for sections of the statewide HST system are the appropriate documents for this stage of planning and decisionmaking, which will involve further refining and evaluating alignment alternatives, station location options, maintenance facility locations, and phasing options. Coordination and consultation with local and regional agencies needed for project approvals will be part of the project-level environmental review process.

The FRA is the federal lead agency for the preparation of the project EIR/EISs. Other federal agencies with major actions or permits may choose to serve as cooperating agencies. The second-tier project EIR/EISs under the National Environmental Policy Act of 1969 (NEPA) for sections of the HST system are the appropriate NEPA documents for the nature and scope of the HST project, anticipated approvals and decisions by federal agencies, and the need to further examine alignment alternatives and station location options selected at the program level.

2.0 PURPOSE OF THESE METHODOLOGY GUIDELINES

This document will establish the technical approach and guide the Authority's contractors in performing parallel analyses for each of the environmental resource areas in each of the project-level EIR/EISs. The date and version number on this document serve as the control number. These methodology guidelines may be updated periodically to incorporate changes in approach, agency comments, and input regarding recent agency guidance or legislation for specific environmental topics.

A project environmental document provides more detail than a program environmental document. FRA's Procedures for Considering Environmental Impacts (64 FR 28545, March 26, 1999) state:

> *In preparing the site specific or component action documentation, the Program Office shall reference and summarize the programmatic document and shall limit the discussion to the unique alternatives and impacts of the site specific or component action.*

Under CEQA, the use of a project EIR enables the lead agency to:

> *...examine the environmental impacts of a specific development project. This type of EIR should focus primarily on the changes in the environment that would result from the development project. The EIR shall examine all phases of the project including planning, construction, and operation.*

These guidelines define the level of analysis to be undertaken at the project level. The methods for the project analysis build on work completed at the program level to further identify and describe impacts at a level of detail necessary for permits and approvals. The environmental analyses prepared using these methodology guidelines will inform lead agency decisions on specific alignment and station locations, mitigation commitments, and future regulatory and other approvals.

3.0 ORGANIZATION OF THIS REPORT

This report is organized in summary/tabular format for each of the environmental study topics to be considered in a project EIR/EIS. For each environmental topic, an outline for the topic is presented, and within that outline, an approach is presented for establishing the study area, conducting field work, determining baseline conditions, and describing the methodology or models to be used for analyzing potential environmental impacts (including CEQA thresholds of significance [Appendix I]), and identifying environmental benefits, refining mitigation approaches that are consistent with adopted mitigation strategies from the 2005 CEQA Findings of Fact (Appendix A) and the 2005 ROD (Appendix C) for the statewide EIR/EIS, and identifying mitigation measures for individual sections of the proposed HST system. The appendices include detailed formatting and terminology to be used (Appendix G) and quality control instructions (Appendix H) for all of the technical analyses and documentation.

3.1 Description of Project Alternatives

The purpose and need established with the program EIR/EIS, along with adopted project objectives and planning criteria for the statewide HST system, will further define alignments and stations in each section of the HST system. Project-level studies and documents will include detailed descriptions of construction; operation and maintenance for all project facilities, including track and alignment beds or elevated guideways, tunnels, tracks, stations, storage and/or maintenance facilities, electrical substations, distribution, and catenary facilities; construction phasing; staging areas and access to construction locations; and spoils removal quantities and disposal.

3.1.1 No Project Alternative

The No Project Alternative represents the existing conditions and what would be reasonably expected to occur in the future if the project were not approved, based on current plans and consistent with available infrastructure. The No Project Alternative describes the state's transportation system serving the same intercity travel market and project purpose and need as the HST project alternatives. It describes the highway, air, conventional rail, and bus facilities and operations at the time the project EIR/EIS is started for the section of the statewide HST system and as they will be after improvements that have been approved and funded in the fiscally constrained and conforming regional transportation plans (RTPs) and state transportation improvement programs (STIPs), and airport development programs (ADPs) are in place by 2035. When this fiscally constrained level of infrastructure improvement is analyzed with the significant growth in population and transportation demand projected to occur by 2035, the data show that most highways and airports serving the intercity travel market will be at capacity, and the level of congestion will severely affect the reliability of travel and the travel time between major metropolitan cities in California.

As with each of the alternatives, the No Project Alternative will be assessed against the purpose and need/objectives for the HST system regarding congestion, safety, reliability and travel times, air pollution, and other environmental impacts topics.

3.1.2 High-Speed Train Alternative

The Authority selected the HST alternative in the Final Statewide Program EIS/EIR and is advancing a statewide HST system capable of speeds in excess of 200 mph (320 kilometers per hour) on dedicated, fully grade-separated tracks, with state-of-the-art safety, signaling and automated train control systems, using steel-wheel on steel rail technology to serve the major metropolitan centers of California (extending from Sacramento and the San Francisco Bay Area through the Central Valley, to Los Angeles and San Diego). Ridership is projected at 41 million passengers for 2035, with significantly higher ridership beyond 2035. Sensitivity analyses using assumptions of increased costs of air and automobile travel resulted in higher potential ridership.

A system of HST corridors was defined and considered at the program level and specific corridor alignments and station location options were selected by the Authority and FRA for further evaluation at the project level. Where project-level engineering results in significant alignment deviating from the corridors selected at the program-level, the differences will be considered and clearly presented in the analysis of the alternatives. Project EIR/EIS analysis will evaluate a combination of HST alignments and station location options and compare them to the No Project Alternative. The Authority may identify a preferred alignment or station location for a draft project EIS/EIS, or there may be no preference. The Authority will identify a preferred alternative in the final project EIR/EISs.

For clear organization and for comparative analysis, the HST corridors will be described from station-to-station (from north to south) within each region, except where a bypass option is considered when the point of departure from the corridor will define the end of the corridor segment. Corridors and HST design options will be shown generally on plans and profiles drawn on aerial photographs at a 1:500-foot scale.

3.2 Information to be Provided to Analysts

For the section environmental teams to complete their work, section engineering teams will develop engineering information for HST alignments, stations, and maintenance and ancillary facilities. For alternatives to be fully evaluated in the project EIR/EISs, design information will include cut-and-fill earthworks, temporary and permanent access, electric traction facilities, related roads and railroad modifications, station parking facilities, construction equipment, and phasing and temporary staging areas and detours. The program management team will provide engineering criteria, which will be used by the section engineering teams. The engineering designs will include the information described below.

3.2.1 Alignment Plans and Profiles

Alignment plans and profiles will include alignment and station location options and profile section type (elevated, at-grade, trench or tunnel). The section engineering team will provide this information based on the engineering criteria and parameters developed by the program management team.

3.2.2 Typical Cross-Section Drawings

Typical cross-section drawings will include location of tracks and guideway facilities in relation to existing conditions and other adjacent facilities, including corridor width from centerline of alignment options, and height and width of proposed infrastructure facilities (e.g., elevated guideway, tunnel, bridges, trenches, trackbed, catenary, transmission lines). The section engineering team will provide this information based on the engineering criteria and parameters developed by the program management team.

3.2.3 Station Plans and Profiles

Station plans and profiles will include station track and platform configuration/layout for intermediate and terminal locations, platform size parameters, parking requirements, access and egress improvements,

and other "footprint" related parameters. The section engineering team will provide this information for each alternative site.

3.2.4 Storage, Vehicle Maintenance, and Maintenance of Way Facilities

Storage, vehicle maintenance, and maintenance of way facilities will include general track configuration, structures, access improvements, and land area needs (e.g., storage requirements) for each alternative site. The section engineering team will develop this information based on general design parameters and engineering criteria provided by the program management team.

3.2.5 Operational Assumptions

Operational assumptions will include train frequencies, operating hours and volumes per day, maximum operating speeds by location, relationship to other services (e.g., adjacent, shared), station track and platform arrangements, level of grade separation, separation/clearances, and track bed requirements.

The program management team will provide ridership information from the California HST forecasting model, including boardings and alightings for general station locations, modal split, and access/egress trips. The ridership information will also identify other secondary ridership, such as improvements to other services from shared-use operations and the assumptions that should be made for these services.

The methodology guidelines provide uniform guidance for consistently and objectively interpreting and subsequently applying thresholds of significance for evaluating potential environmental impacts. The CEQA Thresholds of Significance (Appendix G of the CEQA Guidelines and Appendix F of this document), should be considered as a minimum set of criteria for project evaluation. The program management team indicated will also develop and identify thresholds of significance. The section teams will obtain concurrence from resources and permitting agencies on the identified thresholds of significance prior to conducting the resource evaluations.

The section environmental teams will also evaluate conceptual transit-oriented joint development opportunities defined by the Authority while working with engineering and design teams and local authorities.

3.3 Revisions from Previous Version

The environmental methodologies were re-numbered in the same order presented in Section 3, Affected Environment, Environmental Consequences, and Mitigation Strategies of the EIR/EIS. The methodology on Section 4(f) and Section 6(f) Evaluations was re-numbered as a separate Section 4.0. The revisions and updates to the individual methodologies are based on the comments received from the HST regional consultants, Caltrans' Division of Environmental Analysis, and the U.S. Fish and Wildlife Service. A summary of the major revisions, additions, and updates include the following:

- Transportation
  - Updated with text summarizing key federal and state regulations most relevant to the proposed project.
- Air Quality and Climate Change
  - Renamed the subsection title to include climate change.
  - Replaced AP-42 with Emission Factors for Locomotives (EPA420-F-97-051, December 1997).
  - Added Caltrans web site link to CT-EMFAC.
  - Updated to include the Governor's Office of Planning and Research's adopted amendments to the CEQA guidelines for greenhouse gas emissions.

  - In PM_{10} or $PM_{2.5}$ nonattainment or maintenance areas, localized $PM_{10}/PM_{2.5}$ hotspots will be evaluated using EPA/FHWA guidelines, EPA/FHWA Transportation Conformity Guidance for Qualitative Hot-spot Analyses in PM_{10} and $PM_{2.5}$ Nonattainment and Maintenance Areas (March 2006).
  - In CO nonattainment or maintenance areas, local intersections will be evaluated based on Caltrans CO protocol.
  - Added to CEQA significance criteria: "Generate greenhouse gas emissions, either directly or indirectly, that may have a significant impact on the environment" and "Conflict with any applicable plan, policy or regulation of an agency adopted for the purpose of reducing the emissions of greenhouse gases."
  - Updated with text summarizing key federal and state regulations most relevant to the proposed project.
- Noise & Vibration
  - Updated alignment noise study area to 200–1,300 feet, as defined by FRA's *High-Speed Ground Transportation Noise and Vibration Assessment* (FRA manual) (Table 4-1, Screening Distances for Noise Assessments), depending on train speed, type of corridor, and existing noise environment.
  - Updated alignment vibration study area to 20–275 feet, as defined by the FRA manual (Table 8-1, Screening Distances for Vibration Assessments), depending on train speed, land use, and train frequency.
  - Conduct HST operations noise and vibration impact using the FRA manual (Chapter 5, Detailed Noise Analysis and Chapter 9, Detailed Vibration Assessment) and FTA's manual *Transit Noise and Vibration Impact Assessment* (Chapter 11, Detailed Vibration Analysis).
  - Added the text "The detailed vibration impact analysis shall be prepared in 1/3-octave bands as defined in the FTA manual (Chapter 11, Detailed Vibration Analysis)."
  - Defined impact thresholds as FRA Severe Noise Impact Criteria for HST Operations; FRA Vibration Impact Criteria for HST Operations; Caltrans Noise Abatement Criteria for Traffic; FTA Noise Impact Criteria for Ancillary and Non-HST Noise Sources.
  - Updated with text summarizing key federal and state regulations most relevant to the proposed project
- EMI/EMF
  - Updated with text summarizing key federal and state regulations most relevant to the proposed project.
- Public Utilities and Energy
  - Added the text "Utility providers, conceptual design and project plans and profiles and field review" to the Waste Water Infrastructure subsection
  - Sources for water supply, waster water infrastructure, and storm drains should include utility providers
  - Updated with text summarizing key federal and state regulations most relevant to the proposed project
- Biological Resources & Wetlands
  - Revised the definition of the biological study area to include all areas that will be affected directly or indirectly by the federal action, and not merely the immediate area involved in the action.

  - Added US Army Corps of Engineers to the agencies that will initially review the Biological Assessment for adequacy
  - Regulatory reviews or approvals by the National Oceanic and Atmospheric Association Fisheries Service National Marine Fisheries Service and California Coastal Commission has been added
  - Added the text "Describe and map the vegetation communities in the study area. Vegetation classifications of the plant communities in the study area will be derived from the most current version of the List of Terrestrial Natural Communities of California prepared by CDFG or other classifications determined to be acceptable to CDFG and/or USFWS."
  - Revised discussion on special status species in Section 3.6.2, Plants, Sensitive Natural Communities, & Wildlife.
  - Updated with text summarizing key federal and state regulations most relevant to the proposed project
- Hydrology and Water Resources
  - Added heading, "Floodplain Risk Assessment"
  - Updated with text summarizing key federal and state regulations most relevant to the proposed project.
- Geology, Soils, and Seismicity
  - Mapping at the regional scale will show soil associations, not individual map units
  - Added the following texts: "Identify any active mining operations in the project area", "Identify borrow and spoil areas for the project, which may be regulated under SMARA", and "Estimate amount of construction aggregate required for the project, and determine if demand will exceed local supply" under Key Information section; and added the text "USGS online mineral commodity producers database" under the "Source" section.
  - Added the text "Demand for and available supply of construction aggregate" under the Issues to Evaluate section and the text "Loss or substantial reduction in local or statewide sources of construction aggregate" under the Threshold of Significance section.
  - Updated with text summarizing key federal and state regulations most relevant to the proposed project.
- Hazardous Materials and Wastes
  - Added the text "Laydown or staging areas as part of project boundaries" in definition of study area.
  - Updated with text summarizing key federal and state regulations most relevant to the proposed project.
- Safety and Security
  - Updated with text summarizing key federal and state regulations most relevant to the proposed project
- Socioeconomics, Communities, and Environmental Justice
  - Updated environmental justice study area as one-half mile.
  - Updates address supplementing the 2000 Census data.
  - Updated with text summarizing key federal and state regulations most relevant to the proposed project.

- Station Planning, Land Use, and Development
  - Added Affected Environment section.
  - Updated with text summarizing key federal and state regulations most relevant to the proposed project.
- Agricultural Land
  - Added the text "Discuss impacts of project on existing agriculture zoning" to Affected Environment.
  - To request that a determination as to whether the project location has farmland that is subject to the Farmland Protection Policy Act, submit Forms AD-1006 (LESA point system accounting) and NRCS-CPA-106 (used to assess impacts of corridor projects) to the Natural Resource Conservation Service (NRCS) office that addresses that particular county.
  - Deleted the text "Determine the number of acres/hectares of Resource Conservation District lands that would be converted for project use or severed by the proposed improvement based on an overlay of the GIS Farmlands of Resource Conservation Districts and the conceptual design and project plans and profiles."
  - Revised the previous bullet's text to read "The Section Environmental Team Cumulative Lead will identify what plans will be used in the analysis. This is expected to include the FMMP for past and present conditions and the applicable city and county general plans for projections of future agricultural land conversions."
  - Updated with text summarizing key federal and state regulations most relevant to the proposed project.
- Parks, Recreation, and Open Space
  - Updated with text summarizing key federal and state regulations most relevant to the proposed project.
- Aesthetics and Visual Quality
  - Updated CEQA significance criteria to include "have a substantial adverse effect on a scenic vista; substantially damage scenic resources, including, but not limited to, trees, rock outcroppings, and historic buildings within a state scenic highway; substantially degrade the existing visual character or quality of the site and its surroundings; create a new source of substantial light or glare which would adversely affect day or nighttime views in the area."
  - Updated with text summarizing key federal and state regulations most relevant to the proposed project.
- Cultural Resources
  - Revised definition of study area for architectural history area of potential affect (APE) to "one parcel in urban areas and 200 feet in rural areas."
  - Updated with text summarizing key federal and state regulations most relevant to the proposed project
- Regional Growth
  - Prepared new methodology
- Cumulative Impacts
  - Updated with text summarizing key federal and state regulations most relevant to the proposed project
- Section 4(f) and Section 6(f) Evaluations

- Updated with text summarizing key federal and state regulations most relevant to the proposed project

4.0 ENVIRONMENTAL METHODOLOGY GUIDELINES

Methodology guidelines for the environmental analyses for the project EIR/EISs are summarized on the following pages. Each of the methodology guidelines is organized using the following outline, which will allow for ease of review and modification during the review cycles with the environmental teams and resource agencies for each of the sections of the statewide HST system. In all cases, the analysis should begin with reference to the information and impact findings and mitigation strategies in the CEQA Findings of Fact and the FRA ROD for the two program EIRs/EISs (Appendix A and Appendix B, respectively).

METHODOLOGY OUTLINE

- Laws, Regulations, and Orders
- Affected Environment
  - Topic Areas to Address
  - Definition of Resource Study Area (rsa)
  - Sources of Information and Key Steps
- Environmental Impact Analysis
  - Topic Areas to Address for Impacts
  - *Analysis Methodology (Operational and Construction) (in all cases a future 2035 No- Project will be compared with the baseline and with HST alternatives--alignment/station options)
  - Thresholds of Significance Used in Analysis
- Mitigation
  - Mitigation Measures and Improvement Measures and Mitigation Monitoring and Reporting Plan for Project EIR/EIS; Relationship to Final Statewide Program EIR/EIS Mitigation Strategies*; Impacts of Mitigation
- Products
  - Technical Reports and EIR/EIS Sections
  - Cumulative Section
  - Summary for Executive Summary of EIR/EIS

*[Mitigation should start with the mitigation strategies approved in the CEQA Findings (Appendix A) and the ROD (Appendix C), then refine and apply them to the particular section, identify site-specific mitigation for each significant adverse impact, and develop a project-level MMRP. Mitigation should include measures to avoid impacts, minimize the extent of impact, or replace/relocate the resource to mitigate for impacts.]

The environmental analyses will be completed by the section environmental teams with guidance and review and comment by the program management team. Agency coordination and access issues must be discussed with the section project managers and the program management team. The program management team will remain the key coordination contact for state and federal resource agencies through continued statewide agency group meetings and individual contact with appropriate agency

representatives, according to the issues at hand. Coordination with local and regional agencies is the responsibility of the section environmental teams.

APPENDIX A

PROJECT ENVIRONMENTAL ANALYSIS METHODOLOGY GUIDELINES, VERSION 4

AVAILABLE IN THE CALIFORNIA HIGH-SPEED RAIL AUTHORITY WEBSITE:
http://www.cahighspeedrail.ca.gov/Project_Level_Environmental_Engineering_Guidelines.aspx

Note: This appendix is numbered beginning at Section 3.2. This numbering system corresponds to the EIR/EIS document outline, where Chapter 3.0 is the chapter heading for discussion of the Affected Environment, Environmental Consequences, and Mitigation Measures. Section 3.1 represents the Introduction to the chapter.

3.2 Transportation

3.2.1 Laws, Regulations, and Orders

Key transportation regulations that are most relevant to the proposed project are summarized below.

A. FEDERAL

National Environmental Policy Act (NEPA) [42 U.S.C. Section 4321 et seq.]

Requires the consideration of potential environmental effects, including potential effects to transportation and traffic systems, in the evaluation of any proposed Federal agency action. NEPA also obligates federal agencies to consider the environmental consequences and costs in their projects and programs as part of the planning process. General NEPA procedures are set forth in the Council on Environmental Quality (CEQ) regulations 23 CFR 771.

Federal Railroad Administration (FRA) Regulations [64 FR 28545]

FRA's *Procedures for Considering Environmental Impacts* state that environmental impact statements (EIS) should consider possible impacts to all modes of transportation, including passenger and freight rail, as well as potential impacts to roadway traffic congestion.

Federal Transit Act [49 U.S.C. Chapter 53]

Fosters development and revitalization of public transportation systems that maximize safe, secure, and efficient personal mobility minimize environmental impacts, and minimize transportation-related fuel consumption and reliance on foreign oil.

Code of Federal Regulations, Highways, Statewide Planning [23 U.S.C. Section 135]

Provides the general requirements for statewide planning to encourage and promote the safe and efficient management, operation, and development of surface transportation systems.

B. STATE

California Environmental Quality Act (CEQA) [Section 21000 et seq.] and CEQA Guidelines [Section 15000 et seq.]

Requires state and local agencies to identify the significant environmental impacts of their actions, including potential significant impacts to transportation and traffic systems, and to avoid or mitigate those impacts, when feasible.

California Government Code Section 65080

Requires each transportation planning agency to prepare and adopt a regional transportation plan (RTP) directed at achieving a coordinated and balanced regional transportation system.

California Streets and Highways Code [Section 1 et seq.]

Provides the provisions and standards for the administration of the statewide streets and highways system.

C. REGIONAL AND LOCAL REGULATORY FRAMEWORK

Traffic Congestion Relief and Spending Limit Act

In urbanized counties, a designated congestion management agency (CMA) is responsible for implementing the Traffic Congestion Relief and Spending Limit Act to assist in the land-use decision-making process and to address transportation and air quality impacts in the county.

General Plan Policies

- Transportation and Circulation elements

Alternative Transportation Plans, Policies, and Programs

Consider whether the project conflicts with adopted policies, plans, or programs supporting alternative transportation (e.g., bus turnouts, bicycle racks).

3.2.2 Affected Environment

A. DEFINITION OF RESOURCE STUDY AREA (RSA)

Required Engineering Information	Resource Study Area
▪ Project description ▪ Conceptual design and project plans and profiles ▪ Station footprints and locations	▪ Railroad lines, highways or roadways that are in shared transportation corridors with project alignment ▪ Highways and roadways that serve as the primary means of access to proposed rail stations ▪ Critical intersections that are within a 1-mile radius of proposed rail station ▪ Existing or planned bicycle or pedestrian facilities crossed by the alignment or within one mile of a HST station ▪ Parking facilities within ½-mile of the HST stations ▪ Public transit systems and ground access systems serving the HST stations ▪ Regionally significant intersections beyond the 1-mile radius, as determined in consultation with the local jurisdiction ▪ At-grade crossings along HST corridors

Highways and Roadways

Key Information	Sources
▪ Characteristics of roadways within the RSA ▪ Average daily (ADT), a.m. peak, and p.m. peak hour traffic volumes ▪ Existing highway, roadway, and intersection levels of service (LOS) ▪ Programmed/funded highway and roadway improvements within the RSA	▪ Local jurisdiction general plan, specific/area plans ▪ Regional transportation plans ▪ State Highway Plans - (State Transportation Improvement Program [STIP], State Highway Operation and Protection Program [SHOPP]) ▪ Congestion Management Programs and Congestion Monitoring Reports ▪ California Traffic and Vehicle Systems Unit Highway Capacity Manual (Transportation Research Board 2000)

Transit and Air Travel

Key Information	Sources
▪ Description of transit infrastructure (transit stops, stations) within the RSA ▪ Summary of bus and/or rail transit service (routes, days/times of service, frequency) characterized under baseline scenario of impact analysis ▪ Park & Ride information for transit services ▪ Description of airports located within the RSA and/or location of nearest commercial airport outside of the RSA	▪ Local/regional transit agencies ▪ Regional transportation plans ▪ California Aviation Systems Plan ▪ Local jurisdiction airport master plans ▪ Local jurisdiction general plan, specific/area plans

Non-Motorized

Key Information	Sources
▪ Description of existing walkways and trails in the RSA ▪ Description of designated bikeways in the RSA ▪ Location of major generators of pedestrian and/or bicycle traffic within the RSA	▪ Local jurisdiction general plan, specific/area plans ▪ Local jurisdiction bicycle and/or walkway plans ▪ Regional transportation plans

Parking Facilities

Key Information	Sources
▪ Description of parking supply of parking facilities within the RSA ▪ Description of parking facilities to be provided for the HST system	▪ Local jurisdiction general plan, specific/area plans, ordinances ▪ Local parking inventories ▪ Field investigation

Freight and Goods

Key Information	Sources

▪ Description of designated freight truck routes in the RSA ▪ Identify average percent volumes of trucks on designated freight routes ▪ Identification of freight rail lines that travel through or stop within the RSA ▪ Summary of freight rail service (routes, frequency) ▪ Goods movement characterized under baseline scenario of impact analysis	▪ Local jurisdiction general plan, specific/area plans ▪ Local jurisdiction bicycle and/or walkway plans ▪ Regional transportation plans ▪ California's Department of Transportation Planning (DOTP) Goods Movement plan

Plans and Policies

Key Information	Sources
▪ Identify adopted LOS standard for local jurisdictions within the RSA ▪ Identify local policies relevant to the project and/or alternative transportation modes	▪ Local jurisdiction general plan, specific/area plans, ordinances

3.2.3 Impact Analysis and Mitigation Strategies

A. METHODOLOGY FOR IMPACT ANALYSIS

Traffic Operational Standards

Level of service (LOS) is the primary unit of measure for stating the operating quality of a highway or roadway. LOS is calculated by comparing the actual number of vehicles using a roadway to its carrying capacity. In general, LOS is measured by the ratio of traffic volume to capacity (V/C) or by the average delay experienced by vehicles on the facility.

The *Highway Capacity Manual* (Transportation Research Board 2000) is a recognized source for the techniques used to measure transportation facility performance. Using the *Highway Capacity Manual* procedures, the quality of traffic operation is graded into one of six LOS designations: A, B, C, D, E, or F. LOS A represents the best range of operating conditions and LOS F represents the worst.

Average vehicular delay per vehicle and LOS for signalized intersections are defined quantitatively in Table 3.2-1. A capacity of 1,700 to 1,900 vehicles per lane per hour should be used depending on consistency with local procedures. A lost time of 4 seconds per signal phase should be used. Per lane capacities and lost times may need to be adjusted to account for unusual intersection geometric conditions or traffic signal phasing (e.g., bus priority phasing or pedestrian-only signal phases). The Program Management Team (PMT) will identify a standard for determining an impact.

Table 3.2-1
Level of Service and Average Vehicular Delay Definition for Signalized Intersections

Level of Service	Delay per Vehicle (seconds)	Definition
A	≤ 10	EXCELLENT. No vehicle waits longer than one red light and no approach phase is fully used.
B	>10 and ≤ 20	VERY GOOD. An occasional approach phase is fully used; many drivers begin to feel somewhat restricted within groups of vehicles.
C	>20 and ≤ 35	GOOD. Occasionally drivers may have to wait through more than one red light; backups may develop behind turning vehicles.
D	>35 and ≤ 55	FAIR. Delays may be substantial during portions of rush hours, but enough lower volume periods occur to permit clearing of developing lines, preventing excessive backups.
E	>55 and ≤ 80	POOR. Represents the maximum vehicles that intersection approaches can accommodate; may be long lines of waiting vehicles through several signal cycles.
F	> 80	FAILURE. Backups from nearby locations or on cross streets may restrict or prevent movement of vehicles out of the intersection approaches. Tremendous delays with continuously increasing queue lengths.
Source: *Highway Capacity Manual*, Transportation Research Board 2000.		

Baseline Operational Analysis

Models from different jurisdictions may be reconciled to ensure consistency.

- Identify primary highways including those in the No-Project alternative and primary routes for intercity travel. Also all modes of travel with access to HST station sites should be identified.
- Identify screenlines or cordons combining segments of the primary routes that reasonably represent locations for evaluating in the aggregate baseline traffic and public passenger transportation conditions (using data for current year - 2007 or later depending upon when the HST section study was begun, and 2035 as available) in average daily traffic volumes and in peak-hour volumes, as appropriate.
- Collect new traffic counts where data are not available at critical and regionally significant intersections. The respective regional travel forecasting models will be assumed sufficiently accurate for purposes of forecasting traffic on the screen-lines and cordon lines chosen.
- Establish baseline (current year and 2035 as available data allows) ratios of demand to capacity across each screenline or cordon for roadway and public transportation facilities. Use the *Highway Capacity Manual* standards for capacity analysis.
- Characterize baseline conditions for goods movement (truck/freight) in the general area of study, primarily to identify key goods movement means/corridors based on published sources. Characterize rail freight and conventional passenger rail operations for shared corridor project alternatives.
- Document existing transit service (e.g., lines, headways, service characteristics, needs) within the project RSA, including any and all local and regional transit service including campus shuttles.
- Evaluate transit services available for each project alternative including a summary of comparable transit service data (ridership by station, mode of arrival, service frequency, etc.).

- Characterize baseline conditions for parking within ½-mile of proposed HST stations for the No-Project alternative based on existing parking capacity, local plans for major parking expansion, and adequacy of local parking codes for meeting No-Project growth in demand. An existing conditions assessment of on-street parking will be compiled to identify supply and occupancy within the neighborhood parking impact area at each proposed station site.

Operational Impacts

The statewide High-Speed Rail Travel Demand Forecasting Model will provide access information, including transit demand for feeder service. This information can be used to establish the level of local transit service.

- Use the integrated statewide High-Speed Rail Travel Demand Forecasting Model results for HST ridership projections to remove trips from regional facilities to quantify trip reduction characteristics of HST alternatives. Coordinate with the PMT on ridership projections, parking demand, etc.
- Evaluate the proposed project's horizon year (2035) conditions with the HST project and the No-Project alternative using the future base traffic conditions from the regional travel forecasting model to account for background growth in traffic due to land use development and population growth. Post-process highway traffic volume projections at each study intersection to develop the peak hour turning movement projections. Summarize the intersection LOS to provide a baseline comparison for the project alternatives. Determine the differences with and without project by:
    1. Use the statewide HST forecasting model to determine the number of external-to-external (XX), internal-to-external (IX) and external-to-internal (XI) trips using HST or (in the No-Project alternative) as trips to and from the external highway links.
    2. Enter these figures into the local travel demand model as person-trip demand to and from the HST stations or (in the No-Project alternative) as trips to and from the external highway links.
    3. Run the local model to assign trips to routes including re-routing some traffic in response to increases/decreases in traffic stemming from the alternative under study.
- Describe future transit conditions (bus and fixed guideway) with the HST project, including new supporting services that would be developed for each project alternative, identifying the proposed realignment of existing transit services, new feeder bus lines required to service the project alternatives, as well as a transit interface plan that identifies the location of fixed guideway facilities, bus loading and unloading areas, layover areas, and transit operator support facilities. Existing bus stop locations and ridership data in the vicinity of the stations will be identified and documented.
- Evaluate station traffic flow including transit interface requirements and impacts including how the buses will provide feeder service to the HST stations. The analysis will include pedestrian access and egress, fixed guideway transit station interface, buses stopping/laying over at each station, station area pedestrian and vehicle circulation and access, bus stop locations, as well as kiss-and-ride areas. The projected bus trips at each station will be quantified and operational and service effects evaluated.
- Identify impacts generated by the HST alternative through comparing the results of the No-Project and with project alternatives through changes or differences in LOS and V/C.
- Evaluate parking impacts based on the existing and future supply and the projected demand based upon the patronage and mode of access forecasts at each proposed station, including parking and related circulation impacts for adjacent neighborhoods. For the No-Project Alternative the parking analysis will cover identifiable substitute parking facilities (airport or park

and ride) and, to the extent practicable, parking demand at the destination end of auto trips. Analysis of the impacts associated with the potential loss of on-street parking will include the number and type of spaces displaced, as well as the identification of potential off-street replacement parking lots/structures.

- Identify the effects of new grade-separated crossings on highway/roadway LOS and commuter or freight rail operations.
- Identify the effects of at-grade crossing closures on highway/roadway traffic LOS, vehicular trip patterns, changes in VMT and changes in vehicular accessibility.
- Identify any disruptions to commuter or freight rail operations resulting from the project.
- Identify the effect of the project on existing or planned pedestrian and bicycle facilities.
- Identify the effect of the project on LOS of existing highways and local streets/roadways.
- Identify the effects of the project on commercial air traffic and traffic to/from airports as a result of implementing the new HST transportation mode
- Determine consistency with regional and local transportation plans

Construction Impacts

- Identify vehicle trips resulting from project construction, including mobilization of construction equipment, delivery trips, commute trips, earthmoving trips.
- Identify road closures requiring detours that would result from project construction.
- Evaluate baseline traffic conditions with construction-generated traffic added. Analysis will be conducted during the projected time of peak construction-generated traffic.
- Identify any disruptions to commuter or freight rail operations resulting from construction of grade-separated crossings.
- Identify obstacles to existing or planned pedestrian and bicycle facilities, safety, and mobility resulting from project construction.
- Identify the effect of the project construction on LOS of existing highways and local streets/roadways.
- Identify cumulative construction impacts with other disruption to local streets and highways under construction within the 1-mile radius of the HST project.
- Develop a Traffic Control Plan to mitigate potential adverse effects to highways and roadways LOS, disruption to transit service, parking, emergency access, and non-motorized travel identified to a result during project construction.
- Cross reference the *Air Quality Report* to address construction impacts with regard to greenhouse gas (GHG) emissions and MSAT analysis.

B. SIGNIFICANCE CRITERIA

For the purposes of this analysis the criteria for traffic and parking impacts specified in guidance provided by the Program Management Team (PMT) will be used. In addition, a substantial disruption of passenger or freight rail service will be considered to be a significant transportation impact that requires mitigation.

C. ENVIRONMENTAL CONSEQUENCES

Topic	Issues to Evaluate	Threshold of Significance
Traffic volumes generated by project on highways and surface streets	▪ Change in traffic volumes on surface streets located near stations ▪ Change in traffic volumes on regional roadways that result from HST operations ▪ Change in traffic volumes related to elimination of grade crossings ▪ Effect of changed traffic volumes on operations (LOS) of roadways and critical intersections	▪ Cause an increase in traffic that is substantial in relation to the existing traffic volumes causing traffic operations to exceed, either individually or cumulatively, a level of service standard as specified in guidance provided by the PMT
Parking generated by project	▪ Parking demand near HST stations resulting from project during typical weekday and weekend peak hours ▪ Potential for typical peak period parking demand to exceed planned parking supply	▪ Inadequate parking capacity
Effect of project on emergency access	▪ Potential for traffic congestion resulting from project to change or disrupt access or circulation of emergency vehicles ▪ Potential for physical design elements of project to interfere with emergency access	▪ Cause an increase in traffic that is substantial in relation to the existing traffic volumes causing traffic operations to exceed, either individually or cumulatively, a level of service standard as specified in guidance provided by the PMT
Effect of project on non-motorized mobility	▪ Consider non-motorized connections to and across HST facilities	▪ None
Effect on buses at or near HST stations	▪ Potential for inadequate capacity of feeder bus service ▪ Potential for traffic congestion resulting from project to disrupt or delay bus service that serve or run near stations or other transit operations. ▪ Potential changes in bus routes due to roadway changes and elimination of at-grade crossings	▪ Cause a substantial increase in traffic that is substantial in relation to the existing traffic volumes causing traffic operations to exceed, either individually or cumulatively, a level of service standard as specified in guidance provided by the PMT ▪ This includes the consideration of significant increases in transit running time.
Traffic generated by project construction	▪ Change in traffic volumes on regional roadways that result from HST section construction ▪ Effect of changed traffic volumes on operations (LOS) of roadways and critical intersections	▪ Cause an increase in traffic that is substantial in relation to the existing traffic volumes causing traffic operations to exceed, either individually or cumulatively, a level of service standard as specified in guidance provided by the PMT

Topic	Issues to Evaluate	Threshold of Significance
Parking demand generated by project construction	▪ Potential for parking generated by project construction to exceed supply at staging areas	▪ Parking demand near HST stations resulting from project during typical weekday and weekend peak hours ▪ Potential for typical peak period parking demand to exceed available supply
Effect of construction on emergency access	▪ Potential for traffic congestion resulting from construction to disrupt access or circulation of emergency vehicles ▪ Potential for road closures, lane closures, or detours to interfere with emergency access	▪ Cause an increase in traffic that is substantial in relation to the existing traffic volumes causing traffic operations to exceed, either individually or cumulatively, a level of service standard as specified in guidance provided by the PMT ▪ Inadequate emergency access
Effect of construction on non-motorized mobility	▪ Consider non-motorized connections to and across HST facilities during construction	▪ None
Effect of construction on transit service	▪ Potential for traffic congestion resulting from construction to disrupt or delay bus service ▪ Potential for road closures, lane closures, or detours to interfere with transit routes	▪ Cause an increase in traffic that is substantial in relation to the existing traffic volumes causing traffic operations to exceed, either individually or cumulatively, a level of service standard as specified in guidance provided by the PMT

D. MITIGATION

The Section and Program Management Environmental Teams will:

- Review mitigation strategies described in the CEQA Findings of Fact (November 2005) and the Record of Decision (November 18, 2005) for the statewide EIR/EIS and develop project-level measures consistent with strategies to avoid or minimize impacts. Also the teams will review the traffic technical reports and environmental document sections in the Bay Area to Central Valley EIR/EIS.
- Identify mitigation to address all significant adverse impacts related to the proposed project. Measures could include, but are not limited to capacity improvements of local roadways located near stations; increases in feeder bus service; establishment of permit parking districts around the stations; identification of off-site parking; TSM (transit priority at signalized intersection/along arterials; volume control/reduction (diagonal diverters, full street closures, median barriers, turn restrictions, access control), increase off-street parking and reduction of on-street parking during peak hours, and/or similar measures.
- Analyze impacts of identified mitigation.

E. CUMULATIVE

See the *Caltrans Cumulative Impact Assessment Guidance*, which is applicable to non-highway projects: (http://www.dot.ca.gov/ser/cumulative_guidance/approach.htm). The following steps serve as guidelines for identifying and assessing cumulative impacts:

1. Determine if a cumulative impact analysis will be required for transportation.
   - Prior to conducting the analysis of the project, coordinate with the PMT and Section Environmental Team Cumulative Lead to determine whether transportation will be considered in the cumulative impact analysis. This process is initiated during project scoping and continues throughout the NEPA/CEQA analysis. Assume cumulative impact analysis will be required for any impacts even if these impacts are small or are mitigated to a less than significant level. Only resources with no impacts or beneficial impacts (before or after mitigation) will not be required to be included in the cumulative impact analysis.

2. Define the geographic boundary or Resource Study Area for each resource to be addressed in the cumulative impact analysis. This may result in more than one RSA per resource (e.g., for biology you may have more than one habitat or species RSA; for air quality you may have a CO impact with a small RSA or a basinwide RSA for other impacts). Do not make arbitrary decisions about the boundary of the RSA; you should be able to explain why the boundary was chosen based on environmental characteristics.
   - Submit RSA(s) to the Section Environmental Team Cumulative Lead.

3. Determine method for cumulative impact analysis.
   - Coordinate with the Section Environmental Team Cumulative Lead on the method of analysis (project list and/or plan). In general, a project list approach will be taken in conducting the cumulative impact analysis; however, for some topics a plan or combined approach may be necessary (e.g., air, transportation, and land use).

4. Determine list of past, present, and reasonably foreseeable projects to include in the cumulative impact analysis (if using project list method) or appropriate plan(s) (if using plan method).
   - The Section Environmental Team Cumulative Lead will identify what projects or plans will be used in the analysis. If the analysis is to use a project list approach, the Section Environmental Team Cumulative Lead will provide the Resource Specialist with the database of information for those projects. In some cases the Section Environmental Team Cumulative Lead will coordinate with the Resource Specialists to determine what assumptions will be made in the cumulative impact analysis to account for unknown impacts of future projects (such as for projects in the early planning stages or without a certified environmental document).

5. Describe the current health and the historical context of each resource. (http://www.dot.ca.gov/ser/cumulative_guidance/approach.htm)

6. Identify cumulative impacts.
   - Identify if there is a significant cumulative impact without the project.
   - Identify the direct and indirect impacts of the proposed HST project that might contribute to a cumulative impact on the identified resources (this is information that should come from the impact analysis section). The Resource Specialist will determine if the project contributes to an existing significant cumulative impact or results in a new cumulative impact when the project's impacts are added to the previously less than significant impacts of the other projects (i.e., one that tips the scales from less than significant to significant cumulative impact).

- Based on the list of past, present, and reasonably foreseeable projects and the impacts of those projects and the direct and indirect impacts described above for the proposed HST project, or on analysis of the project in relation to existing plans, assess the potential cumulative impacts and state whether the project's contribution to a cumulative impact is "cumulatively considerable" as defined in Guidelines 15065(a)(3).

7. Identify mitigation for significant cumulative impacts. Coordinate with the Section Environmental Team Cumulative Lead. (http://www.dot.ca.gov/ser/cumulative_guidance/approach.htm)
8. Document results.
   - Summarize the results of the cumulative impact analysis for transportation. This summary should include the identification of transportation resources considered in the analysis, the RSA(s) for each resource, the conclusions concerning the health and historical context of understanding the resource; the proposed project impacts that might contribute to a cumulative impact, and the conclusions of the analysis. The Section Environmental Team Cumulative Lead will describe the other reasonably foreseeable actions considered in the cumulative impact analysis as part of the Cumulative Impacts section of the EIR/EIS.

3.2.4 Products

A. TECHNICAL REPORT:

1. Traffic, Transit, Circulation, Parking, and Freight Rail Report

B. PROJECT EIR/EIS

1. Summary/Table for EIR/EIS Executive Summary
2. Section: Transportation
3. Section: Cumulative Impacts

3.3 Air Quality and Global Climate Change

3.3.1 Laws, Regulations, and Orders

A number of laws and regulations, as well as plans and policies, have been adopted to address air quality and global climate change issues. Key regulations that are most relevant to the proposed project are summarized below.

A. FEDERAL

Federal Clean Air Act [42 U.S.C. Section 7401 et seq.]

The Federal Clean Air Act authorizes the U.S. Environmental Protection Agency to establish National Ambient Air Quality Standards (NAAQS) to protect public health and the environment. The Act states that "No Federal agency may approve, accept, or fund any transportation plan, program, or project unless such plan, program, or project has been found to conform to any applicable State Implementation Plan (SIP) in effect under this act." The Act applies to all emissions from area, stationary, and mobile sources with general procedures based on development of State Implementation Plans (SIPs) to meet the NAAQS.

Federal Clean Air Act General Conformity Requirement [42 U.S.C. Section 7506(c) and Section 176(c)]

The Federal Clean Air Act requires conformity with applicable state implementation plan (SIP)'s purpose of eliminating or reducing the severity and number of violations and expeditious attainment of the national ambient air quality standards. This means that the federal activities may not cause or contribute to new violations of air quality standards, exacerbate existing violations, or delay timely attainment or required interim emissions reductions.

National Ambient Air Quality Standards

The Environmental Protection Agency (EPA) is responsible for establishing the National Ambient Air Quality Standards (NAAQS), enforcing the Clean Air Act (CAA), and regulating transportation-related emission sources, such as aircraft, ships, and certain types of locomotives, under the exclusive authority of the Federal government. As required by the CAA, NAAQS have been established for six major air pollutants. These pollutants, known as *criteria pollutants*, are: carbon monoxide (CO), nitrogen dioxide (NO_2), ozone (O_3), particulate matter (PM_{10} and $PM_{2.5}$), sulfur dioxide (SO_2), and lead (Pb).

Federal Climate Change Policy

Climate change and greenhouse gas (GHG) emission reductions are a concern at the Federal level. In Massachusetts v. U.S. Environmental Protection Agency, et al., 549 U.S. 497 (2007), the United States Supreme court ruled that GHG does fit within the CAA's definition of a pollutant, and that the EPA does have the authority to regulate GHG.

On December 7, 2009, EPA issued a Final Rule for Endangerment and Cause or Contribute Findings for Greenhouse Gases under Section 202(a) of the Clean Air Act. The rule finds that six greenhouse gases taken in combination endanger both the public health and the public welfare of current and future generations. The combined emissions of these gases, (i.e. carbon dioxide, methane, nitrous oxide, hydrofluorocarbons, and sulfur hexafluoride) from new motor vehicles and new motor vehicle engines contribute to greenhouse gas air pollution that endangers public health and welfare under CAA section 202(a).

In September 2009, the EPA published the final rule that requires mandatory reporting of GHG emissions from large sources in the U.S. The final rule requires that facilities that emit 25,000

metric tons (Mt) or more per year of GHG emissions submit annual reports to EPA under Subpart C of the Rule. The gases covered by the final rule are CO_2, CH_4, N_2O, HFC, perfluorocarbons (PFC), sulfur hexafluoride (SF_6), and other fluorinated gases - including nitrogen trifluoride (NF_3) and hydrofluorinated ethers (HFE). On March 22, 2010, Administrator Jackson signed four new proposed rules that amend the Mandatory Greenhouse Gas Reporting Rule. These rules require reporting of emissions data from the oil and natural gas, industries that emit fluorinated greenhouse gases, and from facilities that inject and store carbon dioxide (CO_2) underground for the purposes of geologic sequestration or enhanced oil and gas recovery. Currently, this is not a transportation-related regulation. This will affect electric power generation sources that contribute to the California grid, and may affect the State SIP, but probably will not directly apply to the HST system.

Draft NEPA Guidance on Consideration of the Effects of Climate Change and Greenhouse Gas Emissions [Council on Environmental Quality]

This draft guidance of February 18, 2010 requires consideration of (1) the GHG emissions effects of a proposed action and alternative actions; and (2) the relationship of climate change effects to a proposed action or alternatives, including the relationship to proposal design, and environmental impacts, mitigation and adoption actions, in NEPA analyses and documents. It provides guidance for evaluating the effects of GHG emissions and consideration of current or projected effects of climate change on proposals for federal agency action.

B. STATE

California Clean Air Act [Statutes of 1988, Chapter 1568 and Assembly Bill 2595]

The California Clean Air Act requires nonattainment areas to achieve and maintain the health-based State Ambient Air Quality Standards by the earliest practicable date. The Act is administered by the California Air Resources Board (CARB) at the state level and by local air districts at the regional levels, whereby the air districts are required to develop plans and control programs for attaining the state standards.

Executive Order S-3-05

The goal of this Executive Order is to reduce California's GHG emissions to: (1) 2000 levels by 2010, (2) 1990 levels by 2020, and (3) 80% below the 1990 levels by 2050. Executive Order S-3-05 also calls for Cal/EPA to prepare biennial science reports on the potential impact of continued global warming on certain sectors of the California economy.

California Global Warming Solutions Act [Assembly Bill 32]

Assembly Bill 32 (AB 32) sets overall greenhouse gases (GHG) emissions reduction goals and mandates that CARB create a plan, which includes market mechanisms, and implement rules to achieve "real, quantifiable, cost-effective reductions of greenhouse gases."

Executive Order S-01-07

Executive Order S-01-07 sets forth the low carbon fuel standard for California. Under this executive order, the carbon intensity of California's transportation fuels is to be reduced by at least 10% by 2020.

California Environmental Quality Act (CEQA) [Section 21000 et seq.] and CEQA Guidelines [Section 15000 et seq.]

CEQA requires state and local agencies to identify the significant environmental impacts of their actions, including potential significant air quality and climate change impacts, and to avoid or mitigate those impacts, when feasible. Amendments of December 30, 2009 specifically require lead agencies to address GHG emissions in determining the significance of environmental effects caused by a project, and to consider feasible means to mitigate the significant effects of GHG emissions.

Senate Bill No. 375, Chapter 728 [Senate Bill 375]

Senate Bill 375 (SB 375) requires California's Metropolitan Planning Organizations to develop sustainable community strategies to reduce GHG emissions to meet the regional emissions reduction targets set by the California Air Resources Board. SB 375 requires certain transportation planning projects to comply with sustainable community strategies in order to receive state funding and allows projects that meet regional sustainable community strategies to qualify for CEQA exemption or streamlining.

Governor's Executive Order S-13-08 ***(as applicable to a given HST section)***

This executive order addresses the risk of sea level rise resulting from global climate change, and requires that all state agencies that are planning construction projects in the areas vulnerable to sea level rise consider a range of sea level rise scenarios to assess project vulnerability and, to the extent feasible, reduce expected risks and increase resiliency to sea level rise.

California Ambient Air Quality Standards

The State of California established ambient air quality standards, known as the California Ambient Air Quality Standards (CAAQS). These standards are generally more stringent than the corresponding Federal standards, and they incorporate additional standards for sulfates, hydrogen sulfide, vinyl chloride, and visibility reducing particles.

C. REGIONAL AND LOCAL REGULATORY FRAMEWORK

- Air Quality Management District Indirect Source Reviews (ISR) and other regulations
- Regional transportation agency and metropolitan planning organization regulations

3.3.2 Affected Environment

A. DEFINITION OF RESOURCE STUDY AREA (RSA)

Sources of Information	Resource Study Area
▪ Project description ▪ Regional ▪ Local ▪ Climate Change	▪ Regional—Air basins traversed by alternative HST corridors and No Project highways and airports ▪ Local—300 meters around stations (localized study area) and any affected intersections projected to operate at LOS E or F ▪ Climate Change—State of California (subject to further review)

Local Meteorological Conditions

Key Steps	Sources of Information
▪ Briefly describe the local meteorological conditions within the RSA	▪ Western Regional Climate Center http://www.wrcc.dri.edu

Local Monitored Air Quality

Key Steps	Sources of Information
▪ Short description of the local monitored data within	▪ California Air Resources Board (CARB)

Key Steps	Sources of Information
each RSA (air basin) and summarize published monitoring data for the last 3 years from representative monitoring stations ▪ Use 2 to 3 monitors to represent each section ▪ Provide maps and sources	http://www.arb.ca.gov ▪ See air quality monitoring data

Sensitive Receptors

Key Steps	Sources of Information
▪ Describe sensitive receptors (population groups, such as children, the elderly, and acutely ill and chronically ill persons, especially those with cardio-respiratory diseases, are considered more sensitive to air pollution than others [300 meters from stations and adjacent to intersections as identified above])	▪ Field review ▪ Aerial images ▪ Interviews with local planners

Ambient Air Quality Standards/Attainment Status

Key Steps	Sources of Information
▪ Review State and National Standards ▪ Summarize attainment status-related information for air basins ▪ Review conformity documentation ▪ Identify how local monitored data compares to state and national standards	▪ California Air Resources Board's standards, attainment status http://www.arb.ca.gov ▪ Emission sources: Project Description of HST system, traffic analysis report, energy analysis ▪ State Implementation Plan ▪ Regional transportation improvement plans ▪ Governor's Office Climate Change Portal ▪ Recent statewide strategic plans

Air Toxics

Key Steps	Sources of Information
▪ For Mobile Source Air Toxics (MSAT), see FHWA Interim Guidance on Air Toxic Analysis	▪ Program EIS/EIR ▪ Conceptual engineering plans and profiles and project description ▪ FHWA Interim Guidance on Air Toxic Analysis (for analysis of mobile sources)

Relevant Pollutants

Key Steps	Sources of Information
▪ Describe the pollutants of concern and related health effects: carbon monoxide, sulfur oxides, oxides of nitrogen, ozone, particulate matter (PM10 and PM2.5), lead, and hydrocarbon levels (reactive	▪ California Air Resources Board http://www.arb.ca.gov ▪ Program EIS/EIR

Key Steps	Sources of Information
organic gases and reactive organic compounds)	

Greenhouse Gases/Global Climate Change Effects

Key Steps	Sources of Information
▪ Describe the composition of the state greenhouse gas emissions (transportation sources, stationary sources, natural occurring sources) ▪ Describe the welfare effect of climate change (such as, rising sea levels, snow pack in the Sierra Nevada's, low-lying areas, etc.)	▪ California Air Resources Board's climate page (http://www.arb.ca.gov) ▪ Governor's Office Climate Change Portal ▪ Recent statewide strategic plans ▪ Caltrans environmental document annotated outlines: http://www.dot.ca.gov/ser/downloads/templates/eir_eis_SER.doc#Climate_Change

3.3.3 Impact Analysis and Mitigation Strategies

A. METHODOLOGY FOR IMPACT ANALYSIS

The Program Management Team will:

- Review analyses conducted by regional teams to ensure overall project consistency.
- Act as a contact point for state and local agencies as well as for regional teams.
- Describe the emission sources included in the analysis (e.g., HSR operations, traffic around stations and electrical generation for the system, see above). (Construction emissions to be addressed by Section Environmental Teams.)
- Conduct Statewide Conformity analysis — explain requirements, including State Implementation Plan (SIP) and Statewide Transportation Improvement Program (TIP) status. For CO, PM10, or PM2.5 nonattainment or maintenance areas, evaluate alternatives for potential for CO, PM10, or PM2.5 hotspots.
    - Discuss statewide emission burden projections as supplied by CARB.
    - Quantify statewide mobile source emissions using statewide projections of VMT and corresponding EMFAC2007 (current version) emission rates.
    - Quantify statewide high speed rail and aircraft emissions using statewide projections of daily mileage and/or operational (landings/take-offs) and applicable emission factors from EPA's *Emission Factors for Locomotives* (EPA420-F-97-051) and the Federal Aviation Administration's (FAA) Emissions and Dispersion Modeling System (EDMS) model for aircraft. If data is available, aircraft emissions will be broken down by region and supplied to the appropriate regional teams. It is currently assumed that no changes in existing train service will occur, therefore no emission burdens will be calculated for this transportation element. Also refer to the emission inventory methodologies developed by CARB and the South Coast Air Quality Management District (AQMD) for railyard health risk assessment programs.
    - Determine significance of potential statewide and regional air quality impacts and estimate air quality benefits.
    - Discuss whether project conforms with the adopted Regional Transportation Plan (RTP) and SIP.

- Discuss emission burdens calculated in terms of area attainment status and requirements under general conformity.

- Prepare discussion of greenhouse gas emissions and discuss potential impacts taking into consideration the *Climate Action Program at Caltrans* (December 2006) (http://www.dot.ca.gov/docs/ClimateReport.pdf) and the *California Climate Action Registry, General Reporting Protocol, Reporting Entity-Wide Greenhouse Gas Emissions, Version 3.1 (January 2009)* (http://www.climateregistry.org/resources/docs/protocols/grp/GRP_3.1_January2009.pdf). Perform statewide greenhouse gas analysis, taking into account VMT, aircraft and power requirements of HSR, using statewide energy information from energy PM. Compare emissions to the revisions to Appendix G of the CEQA Guidelines. As this is an evolving field, regularly check for updates of applicable methodologies, regulations, and standards.
- Estimate air quality emissions effects on a statewide level due to HSR power requirements.
- Compare the HSR Alternative with the No Build/No Project Alternative to identify any potential air quality benefits from a mode-shift from auto to rail.
- Provide typical sequence of construction activities and determine whether general conformity will apply if construction period is under 5 years.

The Section Environmental Teams will:

- Quantify criteria pollutant and greenhouse gas emissions for each project alternative using relevant VMT data and EMFAC2007 emissions factors. Analysis will be conducted for opening year (varies by section) and design year.
- Use *Federal Highway Administration (FHWA) Interim Guidance on Air Toxic Analysis* in NEPA documents to determine MSAT analysis methodology. Potential air toxic impacts will be evaluated by conducting a screening-level analysis followed by a more detailed analysis (i.e., dispersion modeling) if necessary. The screening-level analysis consists of reviewing the proposed project's conceptual engineering plans and profiles and project description to identify any new or modified air toxic emissions sources. If it is determined that the proposed project would introduce a new source, or modify an existing air toxic emissions source, then downwind sensitive receptor locations are identified and site-specific dispersion modeling is conducted to determine proposed project impacts. (http://www.fhwa.dot.gov/environment/airtoxic/020306guidmem.htm)
- For stations, utilize URBEMIS model to calculate emissions if it is determined that it is required in your region. Use air quality screening methods for areas affected by stations and facilities, as prescribed in local and regional air districts (consult with local and regional districts), CARB, Caltrans, EPA and FHWA, documents to determine which areas have the potential to experience significant air quality impacts due to the project. (http://www.dot.ca.gov/ser/vol1/sec3/physical/ch11air/chap11.htm)

- Conduct screening level analysis at locations selected because of high traffic volumes and/or levels of congestion and sensitive land uses around stations
- Evaluate local intersections (identified above) based on Caltrans CO Protocol and/or local air district criteria
- Evaluate project-level transportation conformity requirements under the Conformity Regulations
  - In PM10 or PM2.5 nonattainment or maintenance areas, evaluate localized PM10/PM2.5 hotspots using EPA/FHWA guidelines, *EPA/FHWA Transportation Conformity Guidance for Qualitative Hot-spot Analyses in PM10 and PM2.5 Nonattainment and Maintenance Areas* (March 2006)

  - In CO nonattainment or maintenance areas, evaluate local intersections (identified above) based on the Caltrans CO Protocol
  - CO levels near parking facilities are to be estimated using CALINE4. [At this time detailed information regarding parking structures has not been established.]

- Using traffic data provided by local team (VMT and aircraft), perform operational regional criteria pollutant and greenhouse gas emission analyses.
- Two heavy maintenance facilities are currently proposed; one in the Merced to Fresno region and one in the Fresno to Bakersfield region. These regional teams must coordinate their analysis methodology to ensure consistency. The PMT is to be contacted for any questions. The final agreed upon methodology should be submitted to the PMT.
- The PMT is obtaining information about other maintenance facilities (medium and light) and will provide a methodology if analysis is warranted or an explanation, which will be included in the document template, detailing why these facilities do not require detailed analysis. This will be available by May 21, 2010.
- For this type of project, objectionable odor impacts are not an issue and are not discussed further.
- Discuss Governor's Executive Order S-13-08 and any regional and local efforts to address the risks of sea level rise for sections located in the coastal zones.
- Analyze construction impacts:

– The PMT is gathering available construction related data from all teams, in the hopes of establishing consistent construction data between the regions for knowledge sharing. Before conducting the construction analysis, please consult the PMT to see if this information is available. If this information is not available, please follow the procedures detailed in this section.

– Using the construction sequence provided by your team's construction and/or schedule experts, the regional construction emissions will be calculated using the URBan EMISsion (URBEMIS) model Construction emissions should be calculated on a maximum daily basis and on an annual basis. Construction emissions will be calculated for the following types of emission sources:

  - Combustion emissions – construction equipment, mobile source from worker trips, haul truck trips. Mobile source emission burdens from worker trips and truck trips should be calculated using VMT estimates and appropriate emission factors from EMFAC.
  - Fugitive emissions – site disturbance activities, off gassing from asphalt paving and the application of architectural coatings.

– For local construction impacts, a two-step analysis will be conducted. Construction will likely be temporary and transitory. The first step will include a screening of local sensitive receptors to determine if there would be impacts because of the distance to the receptor and anticipated length of local construction activity. If there is a potential for impact to occur, a quantitative assessment will be required at those locations utilizing a dispersion model (AMS/EPA – Regulatory Model [AERMOD]). The results should be compared with the short-term ambient air quality standards for PM10/PM2.5 and oxides of nitrogen. Consider potential cumulative impacts of HST construction emissions with other programmed and funded projects in RSA planned for construction during the same time-frame.

– If your local air agency has specific requirements regarding construction analysis and/or requires the use of a different modeling program, please contact the PMT.

SIGNIFICANCE CRITERIA

Pursuant to State CEQA Guidelines, impacts on air quality would be considered to be significant if the project would:

- Conflict with or obstruct implementation of the applicable air quality plan
- Violate any air quality standard or contribute substantially to an existing or projected air quality violation
- Result in a cumulatively considerable net increase of any criteria pollutant for which the project region is non-attainment under an applicable federal or state ambient air quality standard (including releasing emissions which exceed quantitative thresholds for ozone precursors
- Expose sensitive receptors to substantial pollutant concentrations
- Create objectionable odors affecting a substantial number of people
- Generate greenhouse gas emissions, either directly or indirectly, that may have a significant impact on the environment
    - Conflict with an applicable plan, policy or regulation adopted for the purpose of reducing the emissions of greenhouse gases

Pursuant to NEPA, impacts on air quality would be considered to be significant if the project criteria pollutant emissions would exceed the general conformity *de minimis* thresholds (dependent on attainment status of each air basin) and/or whether the project would result in the creation or worsening of PM10/PM2.5 or CO hot spots.

ENVIRONMENTAL CONSEQUENCES

Project-level Conformity	▪ Potential for localized CO, PM10, or PM2.5 hotspots from operation at intersections and stations ▪ Hotspots based on transportation conformity regulation
Regional Operations	▪ Potential for regional operation emissions of alternatives to exceed allowable regional emission limits, including diesel-fueled buses that feed into the HST stations ▪ Potential conflict with or obstruct implementation of the applicable air quality plan ▪ Potential to result in a cumulatively considerable net increase of any criteria pollutant for which the project region is non-attainment under an applicable federal or state ambient air quality standard (including releasing emissions which exceed quantitative thresholds for ozone precursors)
Regional Construction	▪ Potential for regional construction emissions of alternatives to exceed regional emissions significance thresholds ▪ Potential conflict with or obstruct implementation of the applicable air quality plan ▪ Potential to result in a cumulatively considerable net increase of any criteria pollutant for which the project region is non-attainment under an applicable federal or state ambient air quality standard (including releasing emissions which exceed quantitative thresholds for ozone precursors)
Local Operations	▪ Potential for localized operation impacts at intersections and stations ▪ Violation any air quality standard or contribute substantially to an existing

	or projected air quality violation ▪ Potential to expose sensitive receptors to substantial pollutant concentrations
Local Construction	▪ Potential for localized construction impacts at intersections and stations ▪ Violation any air quality standard or contribute substantially to an existing or projected air quality violation ▪ Potential to expose sensitive receptors to substantial pollutant concentrations
Greenhouse Gas Emissions	▪ Potential for the project to increase or decrease greenhouse gas emissions ▪ Potential conflict with the state requirements for reducing GHG emissions in California ▪ Exceedance interim significance thresholds for greenhouse gases as established by the California CARB ▪ Generation of GHG emissions, either directly or indirectly, that may have a significant impact on the environment ▪ Potential conflict with any applicable plan, policy, or regulation of an agency adopted for the purpose of reducing the emissions of greenhouse gases (*Subject to update and will be discussed with PMT*)
Air Toxics	▪ Potential for construction and operations of the alternatives to result in generation of substantial air toxics emissions ▪ Potential to expose sensitive receptors to substantial pollutant concentrations

MITIGATION

The Section and Program Management Environmental Teams will:

- Review mitigation strategies described in the CEQA Findings of Fact (November 2005) and the Record of Decision (November 18, 2005) for the statewide EIR/EIS and develop project-level measures consistent with strategies to avoid or minimize impacts. Also the teams will review the air quality technical reports and environmental document sections in the Bay Area to Central Valley EIR/EIS.
- Identify feasible mitigation measures and strategies to be incorporated into project designs to minimize air quality impacts including to the greatest extent possible or to levels considered to be less than significant, provide support for emission reductions to be produced by mitigation, and explain expected level of emission reduction
- Analyze impacts of mitigation

CUMULATIVE

See the *Caltrans Cumulative Impact Assessment Guidance*, which is applicable to non-highway projects: (http://www.dot.ca.gov/ser/cumulative_guidance/approach.htm). The following steps serve as guidelines for identifying and assessing cumulative impacts:

1. Determine if a cumulative impact analysis will be required for air quality
   - Prior to conducting the analysis of the project, coordinate with the Program Management Team and Section Environmental Team Cumulative Lead to determine whether air quality will be considered in the cumulative impact analysis. This process is initiated during project scoping and continues throughout the NEPA/CEQA analysis. Assume cumulative impact analysis will be required for any impacts even if these impacts are small or are mitigated to a less than significant level. Only resources with no or beneficial impacts (before or after mitigation) will not be required to be included in the cumulative impact analysis.

2. Define the geographic boundary or Resource Study Area (RSA) for each resource to be addressed in the cumulative impact analysis. This may result in more than one RSA per resource (e.g., for biology you may have more than one habitat or species RSA; for air quality you may have a CO impact with a small RSA or a basinwide RSA for other impacts). Do not make arbitrary decisions about the boundary of the RSA; you should be able to explain why the boundary was chosen based on environmental characteristics.
   - Submit RSA(s) to the Section Environmental Team Cumulative Lead

3. Determine method for cumulative impact analysis
   - Coordinate with the Section Environmental Team Cumulative Lead on the method of analysis (project list and/or plan). In general a project list approach will be taken in conducting the cumulative impact analysis, however for some topics a plan or combined approach may be necessary (e.g., air, transportation, and land use).

4. Determine list of past, present, and reasonably foreseeable projects to include in the cumulative impact analysis (if using project list method) or appropriate plan(s) (if using plan method)
   - The Section Environmental Team Cumulative Lead will identify what projects or plans will be used in the analysis. If the analysis is to use a project list approach, the Section Environmental Team Cumulative Lead will provide the Resource Specialist with the database of information for those projects. In some cases the Section Environmental Team Cumulative Lead will coordinate with the Resource Specialists to determine what assumptions will be made in the cumulative impact analysis to account for unknown impacts of future projects (such as for projects in the early planning stages or without a certified environmental document).

5. Describe the current health and the historical context of each resource (see http://www.dot.ca.gov/ser/cumulative_guidance/approach.htm)

6. Identify cumulative impacts
   - Identify if there is a significant cumulative impact without the project.
   - Identify the direct and indirect impacts of the proposed HSR project that might contribute to a cumulative impact on the identified resources (this is information that should come from the impact analysis section of the proposed HSR project). The Resource Specialist will determine if the project contributes to an existing significant cumulative impact or result in a new cumulative impact when the project's impacts are added to the previously less than significant impacts of the other projects (i.e., one that tips the scales from less than significant to significant cumulative impact).

- Based on the list of past, present, and reasonably foreseeable projects and the impacts of those projects and the direct and indirect impacts described above for the proposed HSR project, or on analysis of the project in relation to existing plans, assess the potential cumulative impacts and state whether the project's contribution to a cumulative impact is "cumulatively considerable" as defined in Guidelines 15065(a)(3).

7. Identify mitigation for significant cumulative impacts. Coordinate with the Section Environmental Team Cumulative Lead (also see http://www.dot.ca.gov/ser/cumulative_guidance/approach.htm).

8. Document results.

   - Summarize the results of the cumulative impact analysis for air quality. This summary should include the identification of air quality resources considered in the analysis, the RSA(s) for each resource, the conclusions concerning the health and historical context of understanding the resource; the proposed project impacts that might contribute to a cumulative impact, and the conclusions of the analysis. The Section Environmental Team Cumulative Lead will describe the other reasonably foreseeable actions considered in the cumulative impact analysis as part of the Cumulative Impacts section of the EIR/EIS.

3.3.4 Products

A. TECHNICAL REPORT

Air Quality Technical Report

PROJECT EIR/EIS

1. Summary/Table for EIR/EIS Executive Summary
2. Section: Air Quality

Section: Cumulative Impacts

Conformity documentation for inclusion in RTP (coordinate with PMT)

3.4 Noise and Vibration

3.4.1 Laws, Regulations, and Orders

Key regulations pertaining to noise and vibration that are most relevant to the proposed project are summarized below.

A. FEDERAL

Federal Noise Emission Compliance Regulation

The Federal Railroad Administration (FRA) has a regulation governing compliance with the Noise Emission Compliance Regulation adopted by the EPA for noise emissions from interstate railroads. The FRA's Railroad Noise Emission Compliance Regulation (49 CFR Part 210) prescribes minimum compliance regulations for enforcement of the railroad noise emission standards adopted by the EPA (40 CFR Part 201).

National Environmental Policy Act (NEPA) [42 U.S.C. Section 4321 et seq.]

NEPA requires the consideration of potential environmental effects, including potential effects to geology, soils, and geologic resources, in the evaluation of any proposed Federal agency action. NEPA also obligates federal agencies to consider the environmental consequences and costs in their projects and programs as part of the planning process. General NEPA procedures are set forth in the Council on Environmental Quality (CEQ) regulations 23 CFR 771.

B. STATE

California Noise Control Act

At the state level, the California Noise Control Act was enacted in 1973 (Health and Safety Code (§ 46010 et seq.) and provides for the Office of Noise Control in the Department of Health Services to provide assistance to local communities developing local noise control programs and work with the Office of Planning and Research to provide guidance for the preparation of the required noise elements in city and county general plans, pursuant to Government Code § 65302(f). In preparing the noise element, a city or county must identify local noise sources and analyze and quantify, to the extent practicable, current and projected noise levels for various sources, including highways and freeways, passenger and freight railroad operations, ground rapid transit systems, commercial, general, and military aviation and airport operations, and other ground stationary noise sources, these would include HST alignments. Noise-level contours must be mapped for these sources, using both community noise equivalent level (CNEL) and day-night average level (L_{dn}), and are to be used as a guide in land use decisions to minimize the exposure of community residents to excessive noise.

California Environmental Quality Act (CEQA) [Section 21000 et seq.] and CEQA Guidelines [Section 15000 et seq.]

CEQA requires state and local agencies to identify the significant environmental impacts of their actions, including potential significant impacts from noise and vibration, and to avoid or mitigate those impacts, when feasible.

C. LOCAL AND REGIONAL REGULATORY FRAMEWORK

General Plan Policies and Ordinances

- Noise and Land Use elements

- Jurisdictional noise ordinances and codes (and their requirements)
- Airport Land Use Compatibility Plans

3.4.2 Affected Environment

A. DEFINITION OF RESOURCE STUDY AREA (RSA)

Key Information	Resource Study Area
▪ Geologic/topographic information (aerial Mapping, GIS base if possible, topography maps) ▪ Project description ▪ Conceptual engineering plans and profiles ▪ Station footprint and locations ▪ Screening analysis for the Statewide Program(Program) Environmental Impact Report (EIS)/Environmental Impact Statement (EIS) ▪ Federal Railroad Administration (FRA) High-Speed Ground Transportation Noise and Vibration Impact Assessment Guidance Manual, October 2005 (FRA Manual)	**Noise:** ▪ Station study area: 150 feet from station boundary ▪ Alignment study area: 200–1,300 feet, as defined by the FRA Manual, Table 4-1, Screening Distances for Noise Assessments, depending on train speed, type of corridor, and existing noise environment ▪ Traffic study areas: as determined in the Program EIR/EIS, or up to 500 feet from centerline of roadways at HST stations, HST parking facilities, and grade separations **Vibration:** ▪ Alignment study area: 20–275 feet, as defined by the FRA Manual, Table 8-1, Screening Distances for Vibration Assessments, depending on train speed, land use, and train frequency

General Noise and Vibration Setting

Key Information	Sources
▪ Identify noise and vibration sensitive land uses, activities, and receivers ▪ Measure existing noise levels at representative land uses and/or noise-sensitive receivers within close proximity to the HST alignment at a distance and frequency that is consistent with the FRA Manual ▪ Where airport noise may be a substantial contributor to the ambient level of environmental noise or was identified as such in the Program EIR/EIS, use the existing noise contours provided in airport master plans or issued by the airport authority ▪ Where the HST alignment is either within close proximity to or part of an existing rail corridor measure existing vibration during pass-by events of existing rail operations at receivers closest to HST alignment at a location and frequency that is consistent with the FRA Manual ▪ Coordinate with land use, biology, and cultural resources to identify sensitive receivers ▪ Where the HST alignment is in close proximity to Section 106 Historic Properties measure existing ambient vibration levels	▪ Local/regional study reports (i.e., Southern California Association of Governments [SCAG], San Diego Association of Governments [SANDAG] studies) ▪ Local noise elements/background reports ▪ Local land use elements/maps ▪ Federal Transit Administration (FTA) Transit Noise and Vibration Impact Assessment Guidance Manual, May 2006 (FTA Manual) ▪ FRA Manual ▪ FRA Manual, Chapter 8 (General Vibration Assessment) ▪ FRA Manual, Chapter 9 (Detailed Vibration Assessment)

3.4.3 Impact Analysis and Mitigation Strategies

A. METHODOLOGY FOR IMPACT ANALYSIS

Impacts related to noise and vibration will be analyzed quantitatively, based on a review of published information for the proposed alignment, field noise and vibration measurements, quantitative analysis and comparison of alternatives for construction and operation of HSR using FTA- and FRA-approved methods, and on professional judgment, in accordance with the current standard of care for the practice.

- Use the FRA Manual as the primary source of guidance for analysis of HST noise and vibration impacts and mitigation supplemented by guidance from FTA. Specifically for non-HST noise and for effect on wildlife, Chapter 5 from the FRA Manual (*Detailed Noise Analysis*) will be followed for impact analyses of all alignments to be carried forward in a Project EIR/EIS. (*Note:* Effect on wildlife includes both wild animals and livestock.)
- For the vibration impact and mitigation analyses of the HST alternatives carried into a Project EIR/EIS, the process presented in the FRA Manual, Chapter 9 (*Detailed Vibration Assessment*) shall be used at selected residences, schools, hotels/motels, medical facilities, or other vibration sensitive receivers. The detailed vibration impact analysis shall be prepared in 1/3-octave bands as defined in the FTA Manual Chapter 11 (Detailed Vibration Analysis).

NOTE: Overall, for impact analysis use thresholds in the following:

- FRA Severe Noise Impact Criteria for HST Operations
- FRA Vibration Impact Criteria for HST Operations
- Caltrans Noise Abatement Criteria for Traffic
- FTA Noise Impact Criteria for Ancillary and Non-HST Noise Sources

Train Operation Noise and Vibration

Key Steps	Sources
▪ Conduct HST train operations noise and vibration impact using the *Detailed Noise Analysis* (Chapter 5), *Detailed Vibration Assessment* (Chapter 9) chapters of the FRA Manual, and FTA *Manual, Detailed Vibration Analysis* (Chapter 11)	▪ FRA Manual ▪ FTA Manual

Station Noise

Key Steps	Sources
▪ Conduct station noise impact analysis using the FTA Manual as discussed in Section 6.7 (*Noise Impact Assessment*) for a detailed assessment. Impact assessment of other "fixed" noise/vibration-producing project components (e.g., ventilation fans, electrical generating and/or substations) may be conducted using professionally accepted methods and practices	▪ FTA Manual, Section 6.7 (Noise Impact Assessment)

Traffic and Grade-Separation Noise

Key Steps	Sources
▪ Conduct traffic and grade-separation noise modeling using the TNM® Version 2.5 as approved by Federal Highway Administration (FHWA) and the California Department of Transportation (Caltrans). The highway noise study methodology shall be suitable for preparing a Caltrans *Noise Study Report* (NSR) and consistent with the *Caltrans Traffic Noise Analysis Protocol* (CaTNAP) and *Technical Noise Supplement* (TeNS), August 2006	▪ McTrans Center, PO Box 116585, Gainesville, FL 32611-6585 (352) 392-0378 http://mctrans.ce.ufl.edu ▪ Caltrans SER Volume 1 on Noise ▪ Technical Noise Supplement (TeNS) http://www.dot.ca.gov/hq/env/noise/pub/Technical%20Noise%20Supplement.pdf ▪ Caltrans Traffic Noise Analysis Protocol (CatNAP) http://www.dot.ca.gov/hq/env/noise/pub/2006_protocol.pdf

Non-HST Sources

Key Steps	Sources
▪ Conduct noise assessment for non-HST sources (e.g., freight rail, LRT) using the FTA Manual methods, and the Chicago Rail Efficiency and Transportation Efficiency (CREATE) noise model, or an equivalent model approved by the Program Manager may be used	▪ FTA Manual ▪ CREATE Freight Noise and Vibration Model http://www.fra.dot.gov/downloads/rrdev/020806%20Create%20Rail%20Noise%20Model.xls

Construction Noise and Vibration

Key Steps	Sources
▪ Assess construction noise and impacts using the FRA Manual, FTA Manual, FHWA Roadway Construction Noise Model (RCNM), U.S. Environmental Protection Agency (EPA) construction noise data (updated), a combination of these methods, or an equivalent method approved by the Program Manager ▪ For joint-use corridors with existing rail, use the FRA Horn Noise Model to assess benefits accrued by eliminating train horns at crossings o If it is considered a substantial noise source, the benefit of eliminating the highway-rail grade-crossing bell noise should also be evaluated	▪ FTA Manual, Section 6.7 (Noise Impact Assessment) ▪ Memorandum of the Release of FHWA Roadway Construction Noise Model (FHWA RCNM) Version 1.0 http://www.fhwa.dot.gov/environment/rcnm.htm ▪ Horn Noise Assessment http://www.fra.dot.gov/us/content/168

Effects on Wildlife

Key Steps	Sources
▪ Assess construction and operation noise impacts on animals using the FRA Manual Chapter 3, Interim Criteria for HST Noise Effects on Animals	▪ FRA Manual, Chapter 3, Interim Criteria for HST Noise Effects on Animals ▪ See Program Bay Area EIR/EIS: note that the FRA criteria are for both wild animals and livestock

B. SIGNIFICANCE CRITERIA

Based on CEQA Guidelines, an impact pertaining to noise and vibration was considered significant if it would result in any of the following environmental effects:

Exposure of persons to or generation of noise levels in excess of standards established by the FRA for high-speed ground transportation and by the FTA for rail projects

- Exposure of persons to or generation of excessive groundborne vibration or groundborne noise levels
- A substantial permanent increase in ambient noise levels in the project vicinity above levels existing without the project

- A substantial permanent increase in ambient noise levels in the project vicinity above levels existing without the project
- A substantial temporary or periodic increase in ambient noise levels in the project vicinity above levels existing without the project

C. ENVIRONMENTAL CONSEQUENCES

Topic	Issues to Evaluate
Train Operation Noise and Vibration	Potential for project to significantly increase noise or vibration levels at sensitive land uses and/or affecting sensitive receivers
Station Noise	Potential for noise from operation of transit stations to significantly increase noise or vibration levels at sensitive land uses and/or affecting sensitive receivers
Traffic Noise	Potential for project-related motor vehicle trips to significantly increase noise levels at sensitive land uses and/or affecting sensitive receivers
Construction Noise and Vibration	Potential for noise or vibration during construction to significantly increase levels at sensitive land uses and/or affecting sensitive receivers
Non-HST noise sources	Potential for noise from rail yards, maintenance facilities, ancillary facilities such as traction power substations (TPSS), emergency diesel generators, and train horns or other warning devices to significantly increase levels at sensitive land uses and/or affecting sensitive receivers
Effect on Wildlife	Potential for noise to affect wild and/or livestock

D. MITIGATION

The Section Environmental Teams will:

- Review mitigation strategies described in the CEQA Findings of Fact (November 2005) and the Record of Decision (November 18, 2005) for the statewide EIR/EIS and develop project-level measures consistent with strategies to avoid or minimize impacts. Also review the noise and vibration technical reports and environmental document sections for the Bay Area to Central Valley EIR/EIS.

- Identify mitigation to address all significant adverse impacts related to the proposed project. Describe and analyze effectiveness of noise and vibration mitigation measures addressing sources, path, and receivers as appropriate using FRA, FTA and Caltrans guidance as appropriate.

- Identify and analyze adverse environmental impacts that may result from implementing the mitigation measures described for specific portions of the HST section (e.g., noise barriers – design, dimensions, impacts [including aesthetic, visual, and community impacts])

The Program Management Team will:

- Develop policy guidance for determining feasibility of site specific noise mitigation measures.

E. CUMULATIVE

See the *Caltrans Cumulative Impact Assessment Guidance*, which is applicable to non-highway projects: (http://www.dot.ca.gov/ser/cumulative_guidance/approach.htm) The following steps serve as guidelines for identifying and assessing cumulative impacts:

1. Determine if a cumulative impact analysis will be required for noise and vibration.
   - Prior to conducting the analysis of the project, coordinate with the Program Management Team and Section Environmental Team Cumulative Lead to determine whether noise and vibration will be considered in the cumulative impact analysis. This process is initiated during project scoping and continues throughout the NEPA/CEQA analysis. Assume cumulative impact analysis will be required for any impacts even if these impacts are small or are mitigated to a less than significant level. Only resources with no or beneficial impacts (before or after mitigation) will not be required to be included in the cumulative impact analysis.
2. Define the geographic boundary or Resource Study Area for each resource to be addressed in the cumulative impact analysis. This may result in more than one RSA per resource (e.g., for biology you may have more than one habitat or species RSA; for air quality you may have a CO impact with a small RSA or a basinwide RSA for other impacts). Do not make arbitrary decisions about the boundary of the RSA; you should be able to explain why the boundary was chosen based on environmental characteristics.
   - Submit RSA(s) to the Section Environmental Team Cumulative Lead.
3. Determine method for cumulative impact analysis.
   - Coordinate with the Section Environmental Team Cumulative Lead on the method of analysis (project list and/or plan). In general a project list approach will be taken in conducting the cumulative impact analysis; however, for some topics a plan or combined approach may be necessary (e.g., air, transportation, and land use).
4. Determine list of past, present, and reasonably foreseeable projects to include in the cumulative impact analysis (if using project list method) or appropriate plan(s) (if using plan method).
   - The Section Environmental Team Cumulative Lead will identify what projects or plans will be used in the analysis. If the analysis is to use a project list approach, the Section Environmental Team Cumulative Lead will provide the Resource Specialist with the database of information for those projects. In some cases the Section Environmental Team Cumulative Lead will coordinate with the Resource Specialists to determine what assumptions will be made in the cumulative impact analysis to account for unknown impacts of future projects (such as for projects in the early planning stages or without a certified environmental document).
5. Describe the current health and the historical context of each resource. (http://www.dot.ca.gov/ser/cumulative_guidance/approach.htm)
6. Identify cumulative impacts.
   - Identify if there is a significant cumulative impact without the project.

- Identify the direct and indirect impacts of the proposed HST project that might contribute to a cumulative impact on the identified resources (this is information that should come from the impact analysis section). The Resource Specialist will determine if the project contributes to an existing significant cumulative impact or result in a new cumulative impact when the project's impacts are added to the previously less than significant impacts of the other projects (i.e., one that tips the scales from less than significant to significant cumulative impact).
- Based on the list of past, present, and reasonably foreseeable projects and the impacts of those projects and the direct and indirect impacts described above for the proposed HST project, or on analysis of the project in relation to existing plans, assess the potential cumulative impacts and state whether the project's contribution to a cumulative impact is "cumulatively considerable" as defined in Guidelines 15065(a)(3).

7. Identify mitigation for significant cumulative impacts. Coordinate with the Section Environmental Team Cumulative Lead. (http://www.dot.ca.gov/ser/cumulative_guidance/approach.htm)
8. Document results.
   - Summarize the results of the cumulative impact analysis for noise and vibration. This summary should include the identification of resources considered in the analysis, the RSA(s) for each resource, the conclusions concerning the health and historical context of understanding the resource; the proposed project impacts that might contribute to a cumulative impact, and the conclusions of the analysis. The Section Environmental Team Cumulative Lead will describe the other reasonably foreseeable actions considered in the cumulative impact analysis as part of the Cumulative Impacts section of the EIR/EIS.

3.4.4 Products

A. TECHNICAL REPORT

1. Noise and Vibration Technical Report

*The report shall conform to the requirements and topics set forth in Section 11.1 (*The Technical Report on Noise and Vibration*) and Section 11.1.1 (*Organization of Technical Report*) of the FRA Manual.*

B. PROJECT EIR/EIS

1. Summary/Table for EIR/EIS Executive Summary
2. Section: Noise and Vibration
3. Section: Cumulative Impacts

3.5 Electromagnetic Fields and Electromagnetic Interference

3.5.1 Laws, Regulations, and Orders

Neither the federal government nor the State of California has established regulatory limits for electromagnetic fields (EMF) exposure. The Federal Communications Commission (FCC) regulates sources of radio frequency (RF) fields to maintain the quality of wireless communications across the spectrum. The FCC, which does not regulate for health and safety, has adopted regulations applicable to EMF exposure that were derived from health and safety evaluations made by the American National Standards Institute/Institute of Electrical and Electronic Engineers (ANSI/IEEE) and the National Council on Radiation Protection (NCRP).

FCC regulations apply to devices that produce RF radiation, such as the proposed HST wireless systems, for both operational and amenity purposes. FCC regulations otherwise apply only if HST operations (RF interference) interfere with legitimate spectral uses.

Voluntary standards for EMF exposure have been developed by the International Committee on Electromagnetic Safety (ICES), which is sponsored by the IEEE. The federal and state governments do not enforce these voluntary standards. The standards are based on studies of electrostimulation (i.e., nerve and muscle responses to the internal electric field [EF] in the body). ICES standards recommend maximum permissible 60-Hz magnetic field (MF) exposure levels that are a few thousand times higher than 0.3 to 0.4 microtesla (µT) (3 to 4 milligauss [mG]). Magnetic fields greater than 0.3 to 0.4 µT are relatively uncommon exposures that are found in a small percentage of homes that have been shown to have a possible association with childhood leukemia based on inconclusive evidence (National Institute of Environmental Health Sciences 1998, 1999; International Agency for Research on Cancer 2002).

Unresolved scientific issues concerning health effects of power frequency related extremely low frequency (ELF) MFs were examined extensively by the California Department of Health Services (Neutra et al. 2002) in response to a request from the California Public Utilities Commission. No evidence substantiates a relationship between ELF EFs and cancer (International Agency for Research on Cancer 2002), and the low-level EFs typically found in homes have not been associated with other diseases (National Institute of Environmental Health Sciences 1998; Institute of Electrical and Electronic Engineers 2002). The ANSI/IEEE standards; NCRP recommendations, International Commission on Non-Ionizing Radiation protection (ICNIRP) guidelines, American Conference of Governmental Industrial Hygienists, Inc. (ACGIH) guidelines suggest maximum permissible 60-hertz (Hz) EF levels for public exposure for electric transmission from 4.2 to 10 kV per meter.

3.5.2 <u>Affected Environment</u>

A. DEFINITION OF RESOURCE STUDY AREA (RSA)

Required Engineering Information	Resource Study Area

▪ Technical features (e.g., frequency, field strengths, modulation system) of the right-of-way-to-train wireless communications system. ▪ Electromagnetic Compatibility Control Plan (EMCCP) ▪ Location of substations and transmission lines	▪ For electromagnetic field (EMF), distance from centerline where EMFs reach existing environmental levels for each new high-voltage line between grid and substations and from the perimeter for each substation. ▪ For electromagnetic interference (EMI), 500-foot on each side of the right-of-way limits for airport, military facilities, telecommunications, research labs, or other facilities with particular sensitivity to EMI impacts.

A. DEFINITION OF EMF/EMI/RFI

The Section Environmental Teams will define the EMF/EMI/radio frequency interference (RFI) consistent with the Statewide Program (Program) Environmental Impact Report (EIR)/Environmental Impact Statement (EIS) and summarize program-level findings of potential for effects on people (workers and passengers with implanted medical devices, or with other electronic appliances), biota, endangered or protected species and agriculture, telecommunications, signaling, and other sensitive uses, referencing the measurements of overhead catenary in *EMF Monitoring on Amtrak's Northeast Corridor: Post-Electrification Measurements and Analysis* (DOT/FRA/RDV-06-01) October 2006.

<u>Baseline</u>

- The Section Teams will quantify existing levels of EMF/EMI/RFI by representative measurement in a "rural", "urban" and, as necessary, "special" location(s) along the selected alignment. Use methods consistent with *EMF Monitoring on Amtrak's Northeast Corridor: Post-Electrification Measurements and Analysis* (DOT/FRA/RDV-06-01) October 2006 and with the best currently applicable standards and recommended practices from the American National Standards Institute/Institute of Electrical Engineers (ANSI/IEEE) on EMF and EMR human exposure safety, measurement and control (e.g., C95.1-2005, C95.2-, C95.6-2002, C95.7-2005, IEEE Std. 644-1994, American Conference of Government Industrial Hygienists, Inc. (ACGIH) occupational exposure levels and Federal Communications Commission (FCC) rules for radio frequency (RF) radiation under CFR 47, Parts 15 and 18).
- The Program Management Team will develop an electromagnetic compatibility control plan (EMCCP) as described in American Public Transportation Association (APTA) SS-E-010-98, to guide HST engineering and design that:
  - Characterizes potential EMI sources and potential radiated, conducted or inducted EMI hazards to rail operations;
  - Considers low-cost, no-cost options, or best practices for the prevention, control and mitigation techniques (such as posted warning signs, fencing, and shielding of substations, or grade crossing access, as needed);
  - Considers best practices in EMI susceptibility control procedures (fencing, active or passive shielding, cathodic protection, surge protection, fail-safe circuit redesign, changed location of antennas or susceptible equipment, redesign of equipment, enclosures for equipment);
  - Utilize current EMC guidance and resources for HSR electrification developed by Electric Power Research Institute (EPRI), Association of American Railroads (AAR), and American Railway Engineering and Maintenance-of-Way (AREMA), including: a) "*Power System and Railroad Electromagnetic Compatibility Handbook*" (EPRI revised First Edition 10102652, Final Report, Nov. 2006) and b) EPRI-sponsored, Enertech, Inc.-EMF modeling and prediction

software, such as EMF Workstation for predicting substations and power line lateral magnetic and electric field levels vs. distance (EMF Expert, ENVIRO, EXPOCALC, Power Line Calculator and RESICALC modules); and c) Enertech, Inc. EPRI approved power-line EMF measurement equipment with associated software (EMDEX with EMCALC 2000);

- Includes a safety analysis and failure analysis of HST components, subsystems and systems;
- Addresses grounding or shorting hazards, prevents, controls or mitigates as needed stray currents (earth-return currents or induced currents in metallic structures and pipelines or along the return rails (where some fraction of the current finds its way back to substation or generating station through the earth for various regions and soil conditions), and the effects of different design and construction practices on these currents;
- Characterizes the frequency bands, spectral characteristics of ELF/EMF and RF generated noise by the pantograph-catenary contact under operating conditions;
- Characterizes parameters (e.g., frequency spectrum, electric and magnetic field strengths, modulation system) for HST wireless communications, control, and power and propulsion system (including auxiliary power); and
- Defines thresholds of significance using methods consistent with *EMF Monitoring on Amtrak's Northeast Corridor: Post-Electrification Measurements and Analysis* (DOT/FRA/RDV-06-01) October 2006 and with the best currently applicable standards and recommended practices from ANSI/IEEE on EMF and EMR human exposure safety, measurement and control.

Populations Near High-Voltage Transmission Lines

Key Information	Sources
▪ Identify occupied structures within zone of potential EMF effects from substations and proposed high-voltage transmission/distribution lines connecting HST substations to the electric power grid ▪ Identify and locate schools, hospitals, airport, military facilities, telecommunications, research labs, or other facilities with possibly greater sensitivity to EMI impacts	▪ Utilize aerial images, maps, and field review to identify structures and facilities ▪ Review existing local planning documents for identification/location of sensitive receptors (like schools, hospitals, etc.)

Telecommunication and Other Sensitive Facilities Susceptible to EMF/EMI/RFI Effects

Key Steps	Sources
▪ Identify telecommunication and other sensitive facilities (such as research facilities) susceptible to EMF/EMI/RFI effects	▪ Field review and aerial images, map facilities along alignment corridor and transmission lines

Railroad/Transportation Equipment Susceptible to EMF/EMI/RFI Effects from Airports, Military, or Other Commercial Transmitters along the ROW

Key Steps	Sources
▪ Identify railroad/transportation equipment susceptible to EMF/EMI/RFI effects from airports, military, or other commercial transmitters along the ROW	▪ Field review and aerial images

Typical Effects of HST-Related EMF/EMI/RFI

Key Steps	Sources
▪ Identify typical effects of HST-related EMF/EMI/RFI	▪ See Program EIR/EIS

3.5.3 Impact Analysis and Mitigation Strategies

A. METHODOLOGY FOR IMPACT ANALYSIS

The Section Environmental Teams will:

- Describe how the engineering design following the EMCCP have accounted for specific structures (e.g., pipelines, cables, fences) that are particularly susceptible to induced ELF currents, project signaling, safety and communications equipment that would be susceptible to EMF/EMI/RFI effects, the potential for EMI impacts to sensitive facilities, and what mitigation has been incorporated in the design.
- Identify critical interface areas that will not conform to the EMCCP.
- For those locations where occupied structures are within 50 feet of a high voltage line or substation, calculate expected exposure levels from HST traction power supply and electric utility systems on humans, biota, agriculture, sensitive species, telecommunications and signaling systems and equipment, or other sensitive uses and compare to guidance in the EMCCP.
- Compare results to thresholds described in the EMCCP for values for the specific potentially affected populations/facilities and use to identify potential exposure and effect.
- Determine whether and where these exposures or effects are impacts that might be significant.

B. SIGNIFICANCE CRITERIA

For this analysis, the project would be considered to result in a significant effect on the environment if it would expose people to a documented health risk associated with EMFs or interfere with the operation of research activities and/or biomedical devices.

C. ENVIRONMENTAL CONSEQUENCES

Topic	Issues to Evaluate

Topic	Issues to Evaluate
Populations near high-voltage transmission lines	▪ Exposure of people occupying structures near high-voltage transmission lines ▪ Exposure of people occupying schools, hospitals, airport, military facilities, telecommunications, research labs, or other facilities with possibly greater sensitivity to EMI impacts
EMF at passenger stations	▪ Exposure of passengers to EMF
EMFs in the vehicle compartment.	▪ Exposure of passengers to EMF
EMFs at specific locations used by the train crew.	▪ Exposure of crews to EMF
Identification of specific structures (e.g., pipelines, cables, fences) that are particularly susceptible to induced ELF currents.	▪ Exposure of structures to ELF currents
Receptors (e.g., telecommunications and research facilities) at specific locations with possibly greater sensitivity to EMI impacts.	▪ Effects of EMF/EMI/RLF on telecommunication and other sensitive research facilities

D. MITIGATION

The Section and Program Management Environmental Teams will:

- Review mitigation strategies described in the CEQA Findings of Fact (November 2005) and the Record of Decision (November 18, 2005) for the statewide EIR/EIS and develop project-level measures consistent with strategies to avoid or minimize impacts. Also review the same documents for the Bay Area to Central Valley EIR/EIS.
- Identify site-specific mitigation measures to address any significant effects.

E. CUMULATIVE

See the Caltrans Cumulative Impact Assessment Guidance, which is applicable to non-highway projects: (http://www.dot.ca.gov/ser/cumulative_guidance/approach.htm). The following steps serve as guidelines for identifying and assessing cumulative impacts:

1. Determine if a cumulative impact analysis will be required for EMI/EMF.
   - Prior to conducting the analysis of the project, coordinate with the Program Management Team and Section Environmental Team Cumulative Lead to determine whether EMI/EMF will be considered in the cumulative impact analysis. This process is initiated during project scoping and continues throughout the NEPA/CEQA analysis. Assume cumulative impact analysis will be required for any impacts even if these impacts are small or are mitigated to a less than significant level. Only resources with no or beneficial impacts (before or after mitigation) will not be required to be included in the cumulative impact analysis.

2. Define the geographic boundary or Resource Study Area (RSA) for each resource to be addressed in the cumulative impact analysis. This may result in more than one RSA per resource (e.g., for biology you may have more than one habitat or species RSA; for air quality you may have a CO impact with a small RSA or a basinwide RSA for other impacts). Do not make arbitrary decisions about the boundary of the RSA; you should be able to explain why the boundary was chosen based on environmental characteristics.
   - Submit RSA(s) to the Section Environmental Team Cumulative Lead.

3. Determine method for cumulative impact analysis.
   - Coordinate with the Section Environmental Team Cumulative Lead on the method of analysis (project list and/or plan). In general a project list approach will be taken in conducting the cumulative impact analysis, however for some topics a plan or combined approach may be necessary (e.g., air, transportation, and land use).

4. Determine list of past, present, and reasonably foreseeable projects to include in the cumulative impact analysis (if using project list method), appropriate plan(s) (if using plan method), or both if using a joint method.
   - The Section Environmental Team Cumulative Lead will identify what projects or plans will be used in the analysis. If the analysis is to use a project list approach, the Section Environmental Team Cumulative Lead will provide the Resource Specialist with the database of information for those projects. In some cases the Section Environmental Team Cumulative Lead will coordinate with the Resource Specialists to determine what assumptions will be made in the cumulative impact analysis to account for unknown impacts of future projects (such as for projects in the early planning stages or without a certified environmental document).

5. Describe the current health and the historical context of each resource (see http://www.dot.ca.gov/ser/cumulative_guidance/approach.htm).

6. Identify cumulative impacts
   - Identify if there is a significant cumulative impact without the project.
   - Identify the direct and indirect impacts of the proposed HST project that might contribute to a cumulative impact on the identified resources (this is information that should come from the impact analysis of the proposed HST project). The Resource Specialist will determine if the project contributes to an existing significant cumulative impact – or – result in a new cumulative impact when the project's impacts are added to the previously less than significant impacts of the other projects (i.e., one that tips the scales from less than significant to significant cumulative impact).
   - Based on the list of past, present, and reasonably foreseeable projects and the impacts of those projects and the direct and indirect impacts described above for the proposed HST project, or on analysis of the project in relation to existing plans, assess the potential

cumulative impacts and state whether the project's contribution to a cumulative impact is "cumulatively considerable" as defined in Guidelines 15065(a)(3).

7. Identify mitigation for significant cumulative impacts.
   - Coordinate with the Section Environmental Team Cumulative Lead (also see http://www.dot.ca.gov/ser/cumulative_guidance/approach.htm).
8. Document results.
   - Summarize the results of the cumulative impact analysis for EMI/EMF. This summary should include the identification of resources considered in the analysis, the RSA(s) for each resource, the conclusions concerning the health and historical context of understanding the resource; the proposed project impacts that might contribute to a cumulative impact, and the conclusions of the analysis. The Section Environmental Team Cumulative Lead will describe the other reasonably foreseeable actions considered in the cumulative impact analysis as part of the Cumulative Impacts section of the EIR/EIS.

3.5.4 Products

A. PROJECT EIR/EIS

1. Section: EMI/EMF
2. Cumulative Impacts Section
3. Summary for EIR/EIS Executive Summary

3.6 Public Utilities and Energy

3.6.1 Laws, Regulations, and Orders

Key public utilities and energy regulations that are most relevant to the proposed project are summarized below.

A. FEDERAL

National Environmental Policy Act (NEPA) [42 U.S.C. Section 4321 et seq.]

NEPA requires the consideration of potential environmental effects, including potential effects to public utilities and energy, in the evaluation of any proposed Federal agency action. NEPA also obligates federal agencies to consider the environmental consequences and costs in their projects and programs as part of the planning process. General NEPA procedures are set forth in the Council on Environmental Quality (CEQ) regulations 23 CFR 771.

Section 403(b) of the Power Plant and Industrial Fuel Use Act (Public Law 95-620)

This act encourages conservation of petroleum and natural gas by recipients of federal financial assistance.

Conservation of Petroleum and Natural Gas [Executive Order 12185, 44 F.R. Section 75093]

This executive order encourages additional conservation of petroleum and natural gas by recipients of federal financial assistance.

Norman Y. Mineta Research and Special Programs Improvement Act (P.L. 108-426)

This act established the U.S. Department of Transportation, Pipeline and Hazardous Materials Safety Administration (PHMSA). PHMSA regulates safe movement of hazardous materials to industry and consumers by all modes of transportation, including pipelines. The regulations require pipeline owners and operators to meet specific standards and qualifications, including participating in public safety programs that "notify an operator of proposed demolition, excavation, tunneling, or construction near or affecting a pipeline". This includes identifying pipelines that may be affected by such activities, and identifying any hazards that may affect a pipeline. In California, pipeline safety is administered by the Office of the Fire Marshal.

B. STATE

California Environmental Quality Act (CEQA) [Section 21000 et seq.] and CEQA Guidelines [Section 15000 et seq.]

CEQA requires state and local agencies to identify the significant environmental impacts of their actions, including potential significant impacts to public utilities and energy, and to avoid or mitigate those impacts, when feasible.

Energy Efficiency Standards for Residential and Nonresidential Buildings [California Code of Regulations, Title 24, Part 6]

The Energy Efficiency Standards promotes efficient energy use in new buildings constructed in California. The standards regulate energy consumed for heating, cooling, ventilation, water heating, and lighting. The standards are enforced through the local building permit process. These standards are applicable to structures, such as High-Speed Train stations, maintenance, and other facilities.

Integrated Waste Management Act [Assembly Bill 939]

This act mandates a reduction of waste being disposed and establishes an integrated framework for program implementation, solid waste planning, and solid waste facility and landfill compliance. The California Integrated Waste Management Board (CIWMB) in the California Environmental Protection Agency (CalEPA) was established to oversee a disposal reporting system, and facility and program planning. On January 1, 2010, all CIWMB duties and responsibilities along with the Division of Recycling of the Department of Conservation were transferred to the new Department of Resources Recycling and Recovery (CalRecycle), which is housed within the Natural Resources Agency.

Local Government Construction and Demolition Guide [Senate Bill 1374]

Senate Bill 1374 (SB 1374) Seeks to assist jurisdictions with diverting their construction and demolition (C&D) waste material with a primary focus on the CIWMB developing and adopting a model C&D diversion ordinance for voluntary use by California jurisdictions .

C. REGIONAL AND LOCAL REGULATORY FRAMEWORK

General Plan Policies and Local Ordinances

- Public Utilities and Energy elements of General Plans.

3.6.2 Affected Environment

A. DEFINITION OF RESOURCE STUDY AREA (RSA)

Sources of Information	Resource Study Area
▪ Utilities– Project plans/profiles (including existing wet and dry utility plans) ▪ Energy– Conceptual design and project plans and profiles and project description (supply transmission lines, commercial grid connections, substations, and power demands and loads at connection points) ▪ Project right-of-way (ROW) information ▪ Existing utility easements	▪ Utilities– In the proposed High-Speed Train (HST) right-of-way and adjacent to the project, at the surface, overhead, and subsurface levels ▪ Existing utility easements ▪ Utility providers for HST service area ▪ Energy – Same as travel demand forecast (see Traffic)

B. PUBLIC UTILITIES

As part of the technical report, the study will identify major and/or critical utilities that may need to be relocated or avoided. Each HST section team will identify such utilities specific to its RSA.

Electrical Facilities

Key Steps	Sources of Information
▪ Describe the existing electrical substations and major transmission lines (66 kV and above) and electrical utility providers in and adjacent to alignment corridor. ▪ Include maps of transmission lines. ▪ Identify existing easements. ▪ Identify planned improvements, upgrades or other capital improvement projects planned in the study area. Determine timing of these projects. ▪ Describe the existing facilities that would provide power to the HST system (consult with project engineers), including electrical power to substations. ▪ Define the existing capacity and existing demand servicing the grid.	▪ Utility providers ▪ Each section's engineering team(reports and information) ▪ Field review

Natural Gas Lines (high pressure)

Key Steps	Sources of Information
▪ Identify major and/or critical (high pressure) natural gas facilities and major (high pressure) natural gas distribution lines in or adjacent to the HST right-of-way. ▪ Identify existing easements. ▪ Identify planned improvements, upgrades or other capital improvement projects planned in the study area. Determine timing of these projects.	▪ Natural gas providers ▪ State Fire Marshall or Office of Emergency Services (OES) ▪ Each section's engineering information (conceptual design, project plans and profiles, utility plans and reports, and other relevant information) ▪ Field review

Petroleum and Fuel Pipelines

Key Steps	Sources of Information
▪ Identify petroleum and fuel facilities and major pipelines within 100 feet of the HST right-of-way. ▪ Identify existing easements. ▪ Identify planned improvements, upgrades or other capital improvement projects planned in the study area. Determine timing of these projects.	▪ Petroleum and fuel providers (may be security issue) ▪ Each section's engineering information (conceptual design, project plans and profiles, utility plans and reports, and other relevant information) ▪ Field review

Communications Facilities

Key Steps	Sources of Information
▪ Describe what type of communication facilities (relay stations, antennae farms, etc.) and services (cable, telephone, fiber optics, cellular, etc.) are in or adjacent to the HST right-of-way. ▪ Identify existing easements. ▪ Identify planned improvements, upgrades or other capital improvement projects in the study area. Determine timing of these projects.	▪ Utility providers ▪ Each section's engineering information (conceptual design, project plans and profiles, utility plans and reports, and other relevant information) ▪ Field review

Water Infrastructure and Facilities

Key Steps	Sources of Information
▪ Describe what type of major water supply facilities (treatment, reservoirs, pump plants, major pipelines [transmitting water from one region to another], canals, and aqueducts) are in or adjacent to the HST right-of-way, including facilities where relocation would be difficult or infeasible. ▪ As applicable, describe what type of farming irrigation water facilities, including aqueducts, channels, etc. are in or adjacent to the HST right-of-way, including facilities where relocation would be difficult or infeasible. ▪ Identify existing easements. ▪ Identify planned improvements, upgrades or other capital improvement projects planned in the study area. Determine timing of these projects.	▪ Local utility providers ▪ Field review ▪ Each section's engineering information (conceptual design, project plans and profiles, utility plans and reports, and other relevant information) ▪ Water Districts

Waste Water Infrastructure

Key Steps	Sources of Information
▪ Describe what type of major waste water facilities (treatment plants, major pipelines [trunk lines], sewer drains) are in or adjacent to the HST right-of-way, including facilities where relocation would be difficult or infeasible. ▪ Identify existing easements. ▪ Identify planned improvements, upgrades or other capital improvement projects planned in the study area. Determine timing of these projects.	▪ Local utility providers ▪ Each section's engineering information (conceptual design, project plans and profiles, utility plans and reports, and other relevant information) ▪ Field review

Storm Drains

Key Steps	Sources of Information
▪ Describe what type of major stormwater facilities are in or adjacent to the HST right-of-way, including facilities where relocation would be difficult or infeasible. ▪ Describe any Caltrans storm drain facilities. Caltrans maintains a variety of storm drain facilities and conveyances (catch basis and drain inlets, curbs, gutters, ditches, channels, and storm drains) within interstate freeway corridors in accordance with its regulations. ▪ Identify existing easements. ▪ Identify planned improvements, upgrades or other capital improvement projects planned in the study area. Determine timing of these projects.	▪ Local utility providers ▪ Public Works departments ▪ Caltrans ▪ Flood control agencies ▪ Each section's engineering information (conceptual design, project plans and profiles, utility plans and reports, and other relevant information) ▪ Field review

Solid Waste Facilities

Key Steps	Sources of Information
▪ Describe waste recycling operations and identify landfills within project communities. ▪ Identify any planned improvements, upgrades or other capital improvement solid waste facilities projects planned in the study area. Determine timing of these projects.	▪ Local providers, local and county general plans, and other local agency sources as appropriate

Energy

Key Steps	Sources of Information
▪ Summarize the overall state findings for existing energy and reference Statewide Program EIR/EIS and Bay Area to Central Valley EIR/EIS (most current). ▪ Identify any changes in the existing conditions for HST section area energy resources, electricity demand, electricity generation capacity, electricity transmission capacity, electricity outlook, and transportation energy consumption. ▪ Identify locations for electrical grid connections and supply transmission lines. ▪ Describe existing power demands and loads at connection points.	▪ Statewide Program EIR/EIS ▪ Bay Area to Central Valley EIR/EIS ▪ Conceptual engineering design information for HST electric power system (supply transmission lines, commercial grid connections, substations, and power demands and loads at connection points)

3.6.3 Impact Analysis and Mitigation Strategies

A. METHODOLOGY FOR IMPACT ANALYSIS

The Section Environmental Teams will review information on public utilities, HST electricity demand, and construction energy use contained in the Program EIR/EIS, Record of Decision (ROD) (November 18, 2005) and CEQA Findings of Fact (November 2005).

Impacts to public utility services will be determined by analyzing direct impacts to utility lines (overhead and underground). This includes conflicts between HST alignments or facilities and existing utilities (see list above) including natural gas, petroleum, and fuel pipelines and facilities or major distribution lines. Information about utility line locations should be obtained from the service providers, field review, project plans and profiles, and as-built drawings. Although every effort should be made to obtain available documentation (such as as-built drawings) for all known utilities and to map existing utility lines and facilities, other unidentified utilities may be located on project sites. Other conflicts that should be identified are those between HST electric traction power facilities and power provider electrical substations and major transmission lines. Analysis of utilities should be focused on the proposed project's potential to result in disruption of services, loss of access to utilities, the need for construction of new or expanded utility services or facilities, or effects to solid waste landfill capacity. A discussion of impacts should include not only the identification of which utilities may need to be relocated but also the analysis of the environmental impacts associated with the relocations. Coordination with all providers should continue through final design and construction of the project.

The energy analysis will focus on the project's demand on regional energy supply, need for additional capacity, peak period electricity demand, and transportation energy demand. The Program Management Team with the Section Engineering Teams will provide design standards and information regarding energy supply and distribution for the HST system. For the HST alternatives, peak-period electricity demand will be provided by the Section Engineering Teams as part of the preliminary design for the traction power supply systems. Data will be compared with energy consumption information presented in the Program EIR/EIS. The demand will be calculated in terms of megawatts and compared to current estimates of peak demand and supply capacity within the grid controlled by the California Independent State Operator (Cal-ISO). In addition to the energy demand of the HST, the energy impacts in terms of fuel usage resulting from other modes of transportation affected by the project such as automobiles, planes and trains will be calculated in terms of BTUs and gallons of fuel.

Permits and approvals required from utility providers should also be specified, including coordination with the California Public Utilities Commission (CPUC).

The Authority will consult with the various utility providers during the detailed project-level analysis to minimize potential conflicts. During final design, the Authority will consult with each utility provider/owner to avoid or reduce potential impacts on existing and planned utilities through design refinements. The technical reports will address consistency with the general programmatic mitigation strategies identified in the Program EIR/EIS prepared for the HST Program. Impact analysis will identify potential conflicts that are unavoidable and focus on reducing and minimizing the potential impact.

B. SIGNIFICANCE CRITERIA

According to the State CEQA Guidelines Appendix G, a project would result in a significant impact on utilities and service systems if it would:

- Require or result in the construction of new water or wastewater treatment facilities or expansion of existing facilities, the construction of which could cause significant environmental effects
- Need new or expanded entitlements to supply water to the project
- Result in a determination by the wastewater treatment provider that serves or may serve the project that it does not have adequate capacity to serve the project's projected demand in addition to its existing commitments
- Require or result in the construction of new stormwater drainage facilities or expansion of existing facilities, the construction of which could cause significant environmental effects
- Be served by a landfill with insufficient permitted capacity to accommodate the project's solid waste disposal needs
- Not comply with federal, state, and local statutes and regulations related to solid waste

In addition, the project would be considered to result in a significant effect on utilities and service systems if it would result in a high-impact conflict. A high-impact conflict would occur where the project would cross or conflict with a fixed facility such as an electrical substation or wastewater treatment plant. Low-impact conflicts would occur if the project would cross or conflict with pipelines or transmission lines, which are easier to avoid or relocate. Low-impact conflicts are considered less-than-significant impacts on utilities and service systems.

Energy

According to Appendix F of the CEQA Guidelines, the means to achieve the goal of conserving energy include decreasing overall per capita energy consumption, decreasing reliance on natural gas and oil, and increasing reliance on renewable energy sources. The significance criteria discussed herein are used to determine whether the project would have a potentially significant effect on energy use, including energy conservation.

- Significant short-term construction energy impacts would occur if construction of the project were judged likely to consume nonrenewable energy resources in a wasteful, inefficient, or unnecessary manner.
- Significant long-term operational or direct energy impacts would occur if the project would place a substantial demand on regional energy supply or require substantial additional capacity, or substantially increase peak and base period electricity demand.
- By contrast, if the proposed project results in energy savings, alleviates demand on energy resources, or encourages the use of efficient transportation alternatives, it would have a beneficial effect.

C. ENVIRONMENTAL CONSEQUENCES

Topic	Issues to Evaluate
All utilities and energy sources	▪ Impacts to major utilities as a result of construction and operation of HST facilities. ▪ Potential for HST facilities to result in the disruption and/or relocation of utilities that would result in prolonged service disruption (identify extent to which the disruption and/or relocation is assumed). ▪ Extent to which design can be used to avoid potential impacts to utility services and energy sources. ▪ Potential for construction and operation of HST facilities to result in the loss of or reduced access to utility lines/corridors (identify extent of the access impacts). ▪
Water Supply	▪ Potential water needs during construction and operation of the HST and its facilities compared to existing supply. ▪ Extent to which design can be used to reduce impacts to water supply. ▪ Need for new or expanded entitlements to supply water to the project or require new water treatment facilities.
Wastewater	▪ Potential for construction and operation of HST facilities to exceed the capacity of a wastewater treatment facility in addition to its existing commitments (identify extent to of impacts to capacity). ▪ Extent to which design can be used to avoid potential impacts on wastewater treatment providers.
Storm Drains	▪ Potential for construction and operation of HST facilities to result in the need for new or expansion of stormwater drainage facilities (identify of new or expanded facility needs). ▪ Extent to which design can be used to avoid potential impacts to stormwater drainage facilities.
Solid Waste	▪ Potential for construction and operation of HST facilities to_result in the disposal of solid wastes that exceed capacity of local landfills (identify impacts to capacity). ▪ Consideration of how much demand is reduced by recycling. ▪ Potential for construction and operation of the HST and facilities to conflict with regulations related to solid waste. ▪ Extent to which design can be used to avoid potential impacts to stormwater drainage facilities.
Regional Energy Supplies/ Resources	▪ Extent to which design can be used to avoid potential impacts to energy supplies. ▪ Analysis of transportation energy impacts due to HST, including roadway VMT, planes and trains. ▪ Refer to Bay Area to Central Valley Program EIR/EIS Energy analysis.
Peak Demand for Electricity	▪ Substantial increase regional peak and base period electricity demand or require substantial additional capacity. ▪ Analysis based on information developed for preliminary design of the traction power supply systems. Data will be compared with energy consumption factors from the Program EIR/EIS and the operations plan.

Topic	Issues to Evaluate
	The demand will be calculated in terms of megawatts and compared to current estimates of peak demand and supply capacity within the grid controlled by the California Independent State Operator (Cal-ISO) (identify extent of peak electricity demands). ▪ Extent to which design or operations can be used to avoid potential peak period demand.

D. MITIGATION

Programmatic mitigation strategies identified in the Program EIR/EIS should be considered. These include:

- Potential utility conflicts would be avoided to the extent possible. If conflicts are unavoidable, the next strategy focuses on reducing and minimizing the potential impact.
- For large utilities (i.e., wastewater treatment facilities, electrical substations, pipelines) the strategy would be first to avoid crossing or using any of the utility right-of-way or facility footprint. Avoidance opportunities include consideration of modifying both the horizontal and vertical profiles of the proposed transportation improvements.
- If avoidance of potential impacts to existing and planned utilities is not feasible and adjustment of alignments has not removed the potential conflict, relocation/reconstruction/restoration of the utility would be considered, in close consultation and coordination with the utility owner, as a second mitigation strategy. This type of mitigation could include combining several utilities into a single utility corridor, relocation, or reconstruction. Where feasible and cost-effective, consolidating several utilities, primarily underground electrical and communications utilities, into one conduit should be considered during utility relocation planning.
- The co-lead agencies will comply with the requirements of the Uniform Relocation Assistance and Real Property Acquisition Policies Act of 1970 in the acquisition of all property necessary for the proposed HST system.
- Reduce operational energy consumption by locating HST maintenance and storage facilities within proximity to major stations/termini.
- Reduce construction energy by developing and implementing a construction energy conservation plan; using energy efficient construction equipment and vehicles; locating construction material production facilities on-site or in proximity to project construction sites; and developing and implementing a program encouraging construction workers to carpool or use public transportation for travel to and from construction sites.

The Section Environmental Teams will:

- Review mitigation strategies described in the CEQA Findings of Fact (November 2005) and the Record of Decision (November 18, 2005) for the Program EIR/EIS and develop project-level measures consistent with strategies to avoid or minimize impacts. Also the teams will review public utilities and energy technical reports and environmental document sections for the Bay Area to Central Valley EIR/EIS.
- Identify secondary impacts of mitigation.

E. CUMULATIVE

See the *Caltrans Cumulative Impact Assessment Guidance*, which is applicable to non-highway projects: (http://www.dot.ca.gov/ser/cumulative_guidance/approach.htm). The following steps serve as guidelines for identifying and assessing cumulative impacts:

1. Determine if a cumulative impact analysis will be required for public utilities and energy.
   - Prior to conducting the analysis of the project, coordinate with the Program Management Team and Section Environmental Team Cumulative Lead to determine whether public utilities and energy will be considered in the cumulative impact analysis. This process is initiated during project scoping and continues throughout the NEPA/CEQA analysis. Assume cumulative impact analysis will be required for any impacts even if these impacts are small or are mitigated to a less than significant level. Only resources with no or beneficial impacts (before or after mitigation) will not be required to be included in the cumulative impact analysis.
2. Define the geographic boundary or Resource Study Area (RSA) for each resource to be addressed in the cumulative impact analysis. This may result in more than one RSA per resource (e.g., for biology you may have more than one habitat or species RSA; for air quality you may have a CO impact with a small RSA or a basinwide RSA for other impacts). Do not make arbitrary decisions about the boundary of the RSA; you should be able to explain why the boundary was chosen based on environmental characteristics.
   - Submit RSA(s) to the Section Environmental Team Cumulative Lead.
3. Determine method for cumulative impact analysis
   - Coordinate with the Section Environmental Team Cumulative Lead on the method of analysis (project list and/or plan). In general a project list approach will be taken in conducting the cumulative impact analysis; however, for some topics a plan or combined approach may be necessary (e.g., air, transportation, and land use).
4. Determine list of past, present, and reasonably foreseeable projects to include in the cumulative impact analysis (if using project list method) or appropriate plan(s) (if using plan method).
   - The Section Environmental Team Cumulative Lead will identify what projects or plans will be used in the analysis. If the analysis is to use a project list approach, the Section Environmental Team Cumulative Lead will provide the Resource Specialist with the database of information for those projects. In some cases the Section Environmental Team Cumulative Lead will coordinate with the Resource Specialists to determine what assumptions will be made in the cumulative impact analysis to account for unknown impacts of future projects (such as for projects in the early planning stages or without a certified environmental document).
5. Describe the current health and the historical context of each resource. (http://www.dot.ca.gov/ser/cumulative_guidance/approach.htm)
6. Identify cumulative impacts.
   - Identify if there is a significant cumulative impact without the project
   - Identify the direct and indirect impacts of the proposed HST project that might contribute to a cumulative impact on the identified resources (this is information that should come from the impact analysis of the proposed HST project). The Resource Specialist will determine if the project contributes to an existing significant cumulative impact or result in a new cumulative impact when the project's impacts are added to the previously less than

significant impacts of the other projects (i.e., one that tips the scales from less than significant to significant cumulative impact).

- Based on the list of past, present, and reasonably foreseeable projects and the impacts of those projects and the direct and indirect impacts described above for the proposed HST project, or on analysis of the project in relation to existing plans, assess the potential cumulative impacts and state whether the project's contribution to a cumulative impact is "cumulatively considerable" as defined in Guidelines 15065(a)(3).

7. Identify mitigation for significant cumulative impacts. Coordinate with the Section Environmental Team Cumulative Lead. (http://www.dot.ca.gov/ser/cumulative_guidance/approach.htm)
8. Document results
   - Summarize the results of the cumulative impact analysis for public utilities and energy. This summary should include the identification of resources considered in the analysis, the RSA(s) for each resource, the conclusions concerning the health and historical context of understanding the resource; the proposed project impacts that might contribute to a cumulative impact, and the conclusions of the analysis. The Section Environmental Team Cumulative Lead will describe the other reasonably foreseeable actions considered in the cumulative impact analysis as part of the Cumulative Impacts section of the EIR/EIS.

3.6.4 Products

A. PROJECT EIR/EIS

1. Summary/Table for EIR/EIS Executive Summary
2. Section: Public Utilities and Energy
3. Section: Cumulative Impacts

3.7 Biological Resources and Wetlands

3.7.1 Laws, Regulations, and Orders

Key biological resources and wetlands regulations that are most relevant to the proposed project are summarized below.

A. FEDERAL

Endangered Species Act of 1973 [16 U.S.C. Sections 1531 to 1543]

The Endangered Species Act (ESA) and subsequent amendments provide guidance for the conservation of federally listed species and the habitat upon which they depend.

Prohibited Acts [Section 9]

Section 9 prohibits the "take" of any fish or wildlife species listed under FESA as threatened or endangered, unless otherwise authorized by federal regulations. "Take" means to harass, harm, pursue, hunt, shoot, wound, kill, trap, capture, or collect, or to attempt to engage in any such conduct. There are two processes, Section 7 and Section 10, whereby take can be allowed for activities when they are incidental to an otherwise legal activity.

Interagency Consultation and Biological Assessments [Section 7]

Section 7 provides a means for authorizing take of threatened or endangered species by federal agencies and applies to actions that are conducted, permitted, or funded by a federal agency. Requires federal agencies to consult with the US Fish and Wildlife Service (USFWS) or National Marine Fisheries Service (NMFS), as appropriate, to ensure that actions they authorize, fund, or carry out are not likely to jeopardize the continued existence of threatened or endangered species or result in the destruction or adverse modification of critical habitat for these species. If a proposed project "may affect" a listed species or destroy or modify critical habitat, the lead agency is required to prepare a biological assessment (BA) evaluating the nature and severity of the potential effect.

Habitat Conservation Plans [Section 10]

Section 10 requires obtaining an Incidental Take Permit from the U.S. Fish and Wildlife Service, for non-federal activities that might incidentally harm (or "take") endangered or threatened wildlife. In order to obtain a permit, a Habitat Conservation Plan (HCP) must be developed designed to offset any harmful effects the proposed activity might have on the species.

Section 404 of the Clean Water Act [33 U.S.C. Sections 1251 to 1376]

The Clean Water Act (CWA) serves as the primary federal law protecting the quality of the nation's surface waters, including wetlands. Under Section 404, the USACE and the EPA regulate the discharge of dredged and fill materials into the waters of the U.S. These waters are primarily defined as navigable waterways or water features (including wetlands) that have a significant nexus to navigable waters. Project sponsors must obtain authorization from USACE for all discharges of dredged or fill materials into waters of the U.S. before proceeding with a proposed activity. Section 404 permits may only be issued for a least environmentally damaging practicable alternative. Compliance with CWA Section 404 requires compliance with several other environmental laws and regulations. The USACE cannot issue an individual permit or verify the use of a general permit until the requirements of NEPA, ESA, the Coastal Zone Management Act (CZM) and the National Historic Preservation Act have been met. Additionally, no permit can be issued or verified until a water quality certification, or waiver of certification, has been issued pursuant to CWA Section 401.

Protection of Wetlands [Executive Order 11990]

This executive order aims to avoid direct or indirect support of new construction in wetlands when a practicable alternative is available. If wetland effects cannot be avoided, all practicable measures to minimize harm must be included.

Coastal Zone Management Act

The Act encourages states to preserve, protect, develop, and where possible, restore or enhance valuable natural coastal resources such as wetlands, floodplains, estuaries, beaches, dunes, barrier islands, and coral reefs, as well as the fish and wildlife using those habitats. Participation in the Act is voluntary, however, the Act makes federal financial assistance available to any coastal state, tribe, or territory that is willing to develop and implement a comprehensive coastal management program.

Fish and Wildlife Coordination Act [16 U.S.C. Sections 661 to 667e et seq.]

The Fish and Wildlife Coordination Act applies to any federal project where any body of water is impounded, diverted, deepened, or otherwise modified. Project proponents are required to consult with USFWS and the appropriate state wildlife agency.

Migratory Bird Treaty Act (MBTA) [16 U.S.C. Sections 703 to 712]

The Migratory Bird Treaty Act protects migratory birds and their parts (including eggs, nests, and feathers). The MBTA prohibits killing, possessing, or trading in migratory birds, except in accordance with regulations prescribed by the Secretary of the Interior. Projects that are likely to result in the taking of birds protected under the MBTA will require the issuance of take permits from the USFWS. Activities that would require such a permit would include, but not be limited to, removal of nests, eggs, and feathers.

Protection of Migratory Bird Populations [Executive Order 13186]

This executive order directs each federal agency taking actions that have or may have adverse impact on migratory bird populations to work with USFWS to develop a memorandum of understanding that will promote the conservation of migratory bird populations. This includes avoiding and minimizing adverse impacts on migratory bird resources when conducting agency actions; restoring and enhancing migratory bird habitats, and preventing or abating the pollution or detrimental alteration of the environment for the benefit of migratory birds.

Bald and Golden Eagle Protection Act [16 U.S.C. Sections 668 to 668d, 54 Statute 250]

This Act prohibits the destruction of bald and golden eagles and their occupied and unoccupied nests.

Magnuson-Stevens Fishery Conservation and Management Act [16 U.S.C. Section 1801 et seq.] ***(as applicable to a given section)***

The Act requires all federal agencies to consult with NMFS on all actions or proposed actions (permitted, funded, or undertaken by the agency) that may adversely affect fish habitats, and requires cooperation among NMFS, the councils, fishing participants, and federal and state agencies to protect, conserve, and enhance Essential Fish Habitat (EFH). EFH is defined as those waters and substrates necessary to fish for spawning, breeding, feeding, and growth to maturity.

Invasive Species [Executive Order 13112]

This executive order requires federal agencies to work cooperatively to prevent and control the introduction and spread of invasive plants and animals.

B. STATE

California Coastal Act (CCA)

The CCA is the State's Coastal Zone Management Program, as referenced under the federal regulations above. The CCA defines the "coastal zone" of California as extending generally 1,000 feet inland from the coast and 3 miles seaward. In certain areas, the inland boundary can extend up to 5 miles. The CCA requires a coastal development permit from either the Coastal Commission or a local government that has a certified Local Coastal Program.

Porter-Cologne Water Quality Act

The Act established nine Regional Water Quality Control Boards (RWQCB) to oversee water quality on a day-to-day basis at the local and/or regional level, which includes preparing and updating water quality control plans. The RWQCB also issues Section 401 water quality certifications. The Act also grants ultimate authority to the State Water Resources Control Board over State water rights and water quality policy.

California Fish and Game Code

California Endangered Species Act (CESA) [Sections 2050 to 2085]

CESA establishes the policy of the State to conserve, protect, restore, and enhance threatened or endangered species and their habitats, by protecting "all native species of fishes, amphibians, reptiles, birds, mammals, invertebrates, and plants, and their habitats, threatened with extinction and those experiencing a significant decline which, if not halted, would lead to a threatened or endangered designation". It mandates that state agencies do not approve a project that would jeopardize the continued existence of these species if reasonable and prudent alternatives are available that would avoid a jeopardy finding. There are no state agency consultation procedures under CESA. For projects that would affect species that is federally and state-listed, compliance with the federal ESA satisfies CESA if the California Department of Fish and Game (CDFG) determines that the federal incidental take authorization is consistent with CESA under Section 2080.1. For projects that would result in take of a species that is state-listed only, the project sponsor must apply for a take permit in accordance with Section 2081(b).

California Native Plant Protection Act [Sections 1900 to 1913]

The Act requires all state agencies to utilize their authority to carry out programs to conserve endangered and rare native plants. It prohibits importation, take, and sale of such plants. The CESA defers to the California Native Plant Protection Act, which ensures that state-listed plant species are protected.

Lake and Streambed Alteration [Section 1600 et seq.]

Requires notifying the CDFG prior to any project activity that would substantially divert or obstruct the natural flow of any river, stream or lake; substantially change or use any material from the bed, channel, or bank of, any river, stream, or lake; or deposit or dispose of debris, waste, or other material containing crumbled, flaked, or ground pavement where it may pass into any river, stream, or lake. This includes ephemeral streams, desert washes, and watercourses with a subsurface flow. It may also apply to work undertaken within the flood plain of a body of water.

Natural Communities Conservation Planning Act [Sections 2800 to 2835]

This Act was enacted to encourage broad-based planning to provide for effective protection and conservation of the state's wildlife resources while continuing to allow appropriate development and growth. Natural Community Conservation Plans (NCCP) may be implemented, which identifies measures necessary to conserve and manage natural biological diversity within the

planning area, while allowing compatible and appropriate economic development, growth, and other human uses.

Bird Nesting Protections [Sections 3503 and 3503.5]

States that it is unlawful to take, possess, or needlessly destroy the nest or eggs of any bird, except as otherwise provided by this code or any regulation made pursuant thereto. To avoid violation of the take provisions, it is generally required that project-related disturbance at active nesting territories be reduced or eliminated during the nesting cycle.

Fully Protected Species [Sections 3511, 4700, 5050, 5515]

Four sections of the CFGC list 37 fully protected species (CFGC Sections 3511, 4700, 5050, and 5515,. and prohibits take or possession "at any time" of the species listed, with few exceptions; states that "no provision of this code or any other law shall be construed to authorize the issuance of permits or licenses to 'take' the species," and (3) states that no previously issued permits or licenses for take of the species "shall have any force or effect" for authorizing take or possession.

C. REGIONAL AND LOCAL REGULATORY FRAMEWORK

- McAteer Petris Act (*applicable to areas within the San Francisco Bay Conservation and Development Commission [BCDC] jurisdiction*)
- Habitat Conservation Plans
- Local Coastal Programs (*as applicable to a given section*)
- General Plan Policies
  - Land Use, Biology, Vegetation, Open Space, and/or other relevant elements
- Noise Ordinances and Codes related to species and their habitats
- Tree Preservation Ordinances

3.7.2 Studies to be Conducted for EIR/EIS

The methods used to identify biological resources in the project region should include pre-field investigation, coordination with the resource agencies, and field surveys. A habitat assessment and vegetation mapping will identify areas for conducting field surveys. In addition, a *Wetlands Delineation Report* will be prepared.

A. PRE-FIELD INVESTIGATION AND CONSULTATION WITH RESOURCE AGENCIES

Pre-field investigations generally consist of reviewing the existing background information to prepare for the field surveys, including developing survey plans for special status species, wetlands, and other waters of the U.S., and initial consultations with resources specialists. Biologists will review existing resource information related to the project region and consult with Resource Specialists (U.S. Fish and Wildlife Service [USFWS], California Department of Fish and Game [CDFG], Bureau of Land Management [BLM], U.S. Forest Service [USFS], U.S. Army Corps of Engineers [USACE],Regional Water Quality Control Board [RWQCB], and/or other agencies as appropriate, and species experts) to evaluate whether special-status species or their habitats, sensitive natural communities, and wetlands and other waters of the U.S and waters of the State could occur or are known to occur in the project area. Pertinent sources to review include the following:

- Final Statewide Program Environmental Impact Report/Environmental Impact Statement (EIR/EIS) for the Proposed California High-Speed Train System (California High-Speed Rail Authority and Federal Railroad Administration, 2005)

- Final Bay Area to Central Valley HST EIR/EIS (California High-Speed Rail Authority and Federal Railroad Administration, 2008)
- California Natural Diversity Database (CNDDB) records search for the associated quads including surrounding quads and the CNDDB Quickviewer (California Natural Diversity Database)
- California Native Plant Society (CNPS) Inventory of Rare and Endangered Plants of California (online at CNPS web site)
- USFWS species list for applicable counties
- Applicable City and County General Plans
- Soil Survey for appropriate area, California (Huntington 1971)
- Relevant California Environmental Quality Act/National Environmental Policy Act (CEQA/NEPA) documents
- Natural Community Conservation Plans
- Habitat Conservation Plans (HCP)
- All pertinent scientific literature available for special-status species that may be present in the Resource Study Area (RSA)

Wetlands and Other Waters

The pre-field investigations should include determining the watersheds associated the project using the Natural Resources Conservation Service basins data sets (USDA and NRCS) and other sources as appropriate. To determine the location, type, and potential extent of the known and potentially present jurisdictional waters, the existing data from the USFWS, USGS, CDFG and other sources as appropriate should be reviewed. An investigation area appropriate for each regional section will be determined (for example, project alignments plus 0.5-mile buffer on either side of the alignments). The investigation area needs to encompass wetlands, other waters, and vernal pool complexes that may be present next to the alignments and the general nature of the habitat surrounding the alignments. As appropriate, a GIS compilation of data layers from relevant sources, including the National Wetlands Inventory (USFWS); National Hydrology Dataset (USGS, EPA), Vernal Pool Habitat datasets (CDFG) and/or other sources, will be used.

Pre-field investigations will also consider and initially determine the potential for the Lake and Streambed Alteration (LSA) Agreement requirement, in initial informal consultations with CDFG in appropriate CDFG regions. The investigations should use maps and aerial images to identify locations where the project can be reasonably assumed to require the LSA Agreement. This information should be presented to the CDFG during early consultations to facilitate the Agreement process to the extent possible.

Sensitive Natural Communities, Critical Habitats, and Special Status Plants and Wildlife

The pre-field investigations include developing a list of sensitive natural communities and all federally-designated critical habitats; and a list of all special status wildlife and special status plants that have some potential to occur in the project area using existing databases and resource agency information.

Sensitive natural communities include jurisdictional wetlands, waters of the U.S., areas that include sensitive plant species, habitats such as those listed as sensitive by the California Department of Fish and Game (CDFG), and habitats listed as sensitive by local and regional agencies or planning documents.

Special-status species are plants, animals, and fish species that are protected under the federal Endangered Species Act (ESA), California Endangered Species Act (CESA), or other regulations, as well as species considered sufficiently rare by the scientific community to qualify for such listing. The table below lists the types of plants, animals, and fish species that qualify as special-status species.

Special-Status Species	Sources of Information
▪ Species listed or proposed for listing as threatened or endangered under ESA	▪ Listed plants, [50 C.F.R. Section 17.12] ▪ Listed animals, [50 C.F.R. Section 17.11] ▪ Proposed species, [various notices in the Federal Register (FR)]
▪ Species that are candidates for possible future listing as threatened or endangered under ESA	▪ 69 F.R. Section 24876 (May 4, 2004)
▪ Species listed or proposed for listing by the State of California as threatened or endangered under CESA	▪ 14 C.C.R. Section 670.5
▪ Species that meet the definitions of rare or endangered under CEQA	▪ CEQA Guidelines Section 15380
▪ Plants listed as rare under the California Native Plant Protection Act (NPPA)	▪ California Fish and Game Code Section 1900 et seq.
▪ Plants considered by CNPS to be "rare, threatened, or endangered in California"	▪ Lists 1B and 2 (2001)
▪ Plants listed by CNPS as plants about which more information is needed to determine their status, and plants of limited distribution, which may be included as special-status species on the basis of local significance or recent biological information	▪ Lists 3 and 4 (2001)
▪ Animal species of special concern to the CDFG	▪ Birds (Remsen, 1978) ▪ Mammals (Williams, 1986) ▪ Amphibians and Reptiles (Jennings and Hayes, 1994)
▪ Animals fully protected in California	▪ Birds [California Fish and Game Code Section 3511] ▪ Mammals [California Fish and Game Code Section 4700] ▪ Amphibians and Reptiles [California Fish and Game Code Section 5050]

Database queries should include all reported occurrences and those potentially found within appropriate USGS quads. An appropriate investigation area will be determined (for example a 10-mile radius for database queries and a 9-quad search area), based on regional and area-specific characteristics of each regional section.

A preliminary review of important wildlife movement corridors will be conducted using the available information, such as the Missing Linkages reports (ex. reports by Penrod at al.), habitat and linkage corridor data made available by Endangered Species Recovery Programs, information provided by resources agencies, and other available sources.

This information will be used to develop lists of special-status species and other sensitive biological resources that could be present in the Resource Study Areas (RSAs) for each resource (biological, wetlands, and wildlife movement RSAs), which are discussed in Section 3.6.3-A. Species will be included in these lists if they were known to occur in the project region and if their habitats could be located in the RSAs. Early informal consultations with USFWS and CDFG in appropriate CDFG regions will be conducted for initial guidance and to obtain relevant datasets which may not be otherwise available without directly contacting the appropriate agency office.

Tables will be prepared, listing special-status plant and wildlife species that have been identified as having the potential to occur in the project RSAs.

B. HABITAT ASSESSMENT AND VEGETATION MAPPING

Habitat Assessment

A habitat assessment is conducted to determine the potential presence of special-status species. The habitat assessment area will be based on a comparison of the habitats in the project's regional setting with reported occupied habitats and/or comparisons with reported occupied habitats. The habitat assessment will be the proposed project's physical ground disturbance footprint (e.g., stations, track, maintenance and equipment storage areas, access roads, temporary construction easements, etc.) plus a 500-foot boundary for indirect impacts, to the maximum extent practical.

The habitat assessment will include consideration of habitat connectivity, i.e. potentially important landscape linkages that could support and facilitate the movement and dispersal of substantial numbers of species between blocks of open space essential for long-term wildlife viability.

Vegetation Mapping

The habitat assessment will include vegetation mapping. Vegetation mapping describes and maps the vegetation communities in the biological RSA. Vegetation classifications of the plant communities will be derived from the current version of the *List of Terrestrial Natural Communities of California* prepared by CDFG or other classifications determined to be acceptable to CDFG and/or USFWS.

For the vegetation mapping, identify, evaluate, and map in GIS all vegetation communities, including potentially important landscape linkages that could support and facilitate the movement and dispersal of substantial numbers of species between blocks of open space essential for long-term plant viability.

The detail and scale of habitat mapping will include consideration of input received from CDFG and other resource agencies, as appropriate.

C. FIELD SURVEYS

Biological Surveys

The purpose of the biological field surveys is to characterize biological communities and their associated wildlife habitat uses, determine whether the biological RSA contains suitable habitat for common and special-status wildlife and plant species, and identify areas that may qualify as potential waters of the United States and delineate potential waters of the United States to determine the extent of USACE jurisdiction. As appropriate, a survey plan, which includes surveys for early-and late-blooming special-status plants, will be developed and presented for review by CDFG, USFWS, USACE, and/or other agencies, prior to conducting the surveys.

In general, the *Biological Resources and Wetlands Technical Report* should detail the biological surveys to support project-level analysis, including:

- Description of the team that conducted the surveys, consisting of a wildlife biologist and a botanist and wetlands ecologist, as necessary
- Exact dates and times the surveys were conducted and length of times spent performing the surveys
- Weather conditions
- Description of whether the survey was conducted by driving or walking
- Description of the area that was surveyed, including habitat types and vegetation communities
- Species observed
- Photographs taken during the survey
- Record any deviations from the methods outlined in the survey plan and/or this document, as appropriate

Special-Status Wildlife and Plant Species Protocol/Focused Surveys

Potential for special-status species, and the level of effort to comply with the ESA and CESA, will ultimately be predicated on the presence or absence of potentially suitable habitat within and adjacent to the biological, wildlife movement, and wetlands RSA. In the case that proposed, threatened or endangered species are present or habitat is present in the biological or wildlife movement RSAs, the Authority (with regional teams input) will initiate consultation with the USFWS under Section 7 of the ESA and will prepare a *Biological Assessment* (BA) to support a Biological Opinion.

If determined to be necessary through early consultations with appropriate resource agencies, experts and previous preliminary biological work, the Section Environmental Teams will conduct protocol-level field surveys for special-status species pursuant to USFWS, USFS, CDFG, and/or other appropriate regulatory agency approved methodologies. For permitting purposes it may be necessary to assume presence of special-status species in identified areas with suitable habitat that are inaccessible, as well as areas that cannot be effectively surveyed due to other factors, such as time of year or the amount of rainfall.

Protocol-level surveys for special-status plants will be conducted according to the guidelines established by CDFG and/or USFWS. The guidelines require that surveys be conducted at the appropriate time of year by qualified individuals, and require that all species encountered be identified to the lowest taxonomic level possible.

Protocol-level surveys for special-status wildlife species will be conducted according to the guidelines established by CDFG and/or USFWS. These guidelines are often specific to individual species and often require that the surveyors possess or obtain the necessary permits to conduct the surveys.

The technical report that is prepared will evaluate if special aquatic resources or habitat for proposed, state or federally listed species is present or absent within the biological RSA or wildlife movement RSA. In general, the report will include the following:

- Names of field investigator(s)
- Exact dates and times the surveys were conducted and length of times spent performing the surveys
- Weather conditions
- Species observed
- Description of the area that was surveyed, including habitat types and vegetation communities
- Map and location data for any special-status species observations (including GPS coordinates)

- Representative photos (if possible) and disturbance regime/land use within the RSA(s)
- Complete *CDFG California Natural Diversity Database* forms for each special-status species found
- Record any deviations from the methods outlined in the survey plan and/or this document,

If necessary, this information will be used to support preparation of the Biological Assessment (BA), formal consultation with USFWS, and a consistency determination by CDFG. The BA will identify the action area (the action area can be different from the biological RSA and wildlife movement RSA), describe the project effects on listed species, and identify measures to avoid, minimize, and compensate for those effects. The BA will be suitable for submittal to the CDFG, USFS, and/or USFWS and inclusion in a technical appendix in the EIR/EIS.

D. WATERS OF THE UNITED STATES, INCLUDING WETLANDS

A *Wetlands Delineation Report* will be prepared presenting the results of the Clean Water Act (CWA) and California Fish and Game Code Section 1600 (et seq.) jurisdictional delineation. The report will be suitable for submittal to the USACE, Regional Water Quality Control Board (RWQCB), and CDFG for purposes of CWA Section 401, Section 402, Section 404, and Streambed Alteration Agreement permit applications, and inclusion in the EIR/EIS document. Accordingly, the report will quantify jurisdictional areas and include a breakdown of wetlands, non-wetland waters of the U.S., waters of the State, and other special aquatic resources within the RSA(s).

The *Wetland Delineation Report* will include the following:

- Description of study methodologies
- Background information on the CWA (e.g., USACE, RWQCB) and CDFG permitting
- A description of vegetation, soils, and hydrology in the project region pursuant to the USACE *Wetland Delineation Manual* (Environmental Laboratory, 1987) and the guidance detailed in *A Field Guide to Lake and Streambed Alteration Agreements Sections 1600-1607* (Environmental Services Division, January 1994).
- Map depicting the field survey results
- USACE field data sheets from sampling locations

3.7.3 Affected Environment

A. DEFINITION OF RESOURCE STUDY AREA (RSA)

Key Steps	Resource Study Area
The Section Environmental Teams will assess and describe the following existing resources in the RSAs: ▪ *Biological resources* are the plants, wildlife, and habitats that occur, or have the potential to occur, within the biological RSA. This includes biological resources associated with aquatic resources related to waters of the U.S., waters of the state, isolated water features, and other water bodies. ▪ *Special-status species* are defined as any species that has been afforded special recognition by federal, state, or local resources agencies (e.g., USFWS, USFS, CDFG, county and city Habitat Conservation Plans (HCPs), and conservation organizations (e.g., California Native Plant	▪ *Biological RSA* – the proposed project's physical ground disturbance footprint (e.g., stations, track, maintenance and equipment storage areas, temporary access roads, and so forth) plus a 300-foot adjacent area on either side to address both direct and indirect impacts. Where access to the entire study area will not be possible as a result of private property or physical barriers, observations will be made from nearest appropriate vantage points with binoculars and/or via aerial photographs to attempt to document and verify the presence or absence of resources. ▪ *Wetland RSA* – the wetland delineation will be conducted for the proposed project's physical ground disturbance footprint (e.g., stations, track,

Key Steps	Resource Study Area
Society [CNPS]) ▪ *Special aquatic resources* (e.g., seasonal wetlands, vernal pools) are jurisdictional features under CWA Section 404 and Section 401 or California Fish and Game Code Section 1600 et seq. This includes special aquatic resources determined to be important by water boards, such as waters of the state. ▪ *Critical habitats* are areas designated by the USFWS that are either occupied by species that are federally listed as threatened or endangered or that provide them with suitable habitat and within which are found the geographical and physical features that are essential to the conservation of the species. As defined under the ESA, conservation is defined as "any and all methods and procedures used to bring a species to recovery; the point at the protections of the ESA are no longer needed."	equipment maintenance and storage areas, temporary construction easements and so forth) within or immediately adjacent to a wetland area. The delineation will occur after the pre-field investigations are complete. The wetland RSA is different than the pre-field investigation study area. ▪ *Wildlife movement RSA* – for wildlife movement corridors, proposed project's physical ground disturbance footprint (e.g., stations, track, equipment maintenance and storage areas, and so forth) plus a larger area based on the species likely to be present and determined in consultation with appropriate regulatory agencies

Regional Setting

Key Steps	Sources of Information
▪ This will be a discussion of the project's regional setting, which may vary by topical section, encompassing areas appropriate to the topic of analysis: The RSA(s) used for regional analysis within each section will be defined and discussed here.	▪ CNDDB records search for the associated quads, including surrounding USGS 7.5-minute quadrangles and the CNDDC Quickviewer ▪ CNPS Inventory of Rare and Endangered Plants of California (most current) ▪ USFWS species list for applicable counties ▪ Applicable City and County General Plans ▪ Soil Survey for appropriate area, California ▪ Relevant CEQA/NEPA documents ▪ HCPs

Biological Communities (land cover types)

Key Steps	Sources of Information
▪ Describe biological communities (assemblages of species, both plant and wildlife, forming communities) and wildlife habitats that occur in the study area	▪ Results of pre-field review of aerial photographs and habitat assessment survey, using List of Terrestrial Natural Communities of California prepared by CDFG or other classifications determined to be acceptable to CDFG and/or USFWS

Special-Status Species

Key Steps	Sources of Information

Key Steps	Sources of Information
▪ Identify, evaluate, and map in GIS all habitat conditions, including potentially important landscape linkages that could support and facilitate the movement and dispersal of substantial numbers of species between blocks of open space essential for long-term plant/wildlife viability.	▪ Results of habitat assessment and special-status plant and wildlife surveys ▪ Results of agency and species expert contacts ▪ Describe any USFWS recovery plans, including core areas for recovery ▪ Results of previous environmental and planning documents

Critical Habitats

Key Steps	Sources of Information
▪ Include a description of critical habitat in the project area (as defined by the USFWS)	▪ Obtain information from USFWS website and recovery plans and use GIS if necessary to determine if critical habitat is present in the project area

Wildlife Movement/Migration Corridors

Wildlife movement/migration corridors link together areas of wildlife habitat that are otherwise separated by rugged terrain, changes in vegetation, or human disturbance. The fragmentation of open space areas by urbanization tends to create isolated islands of wildlife habitat. The fragmentation of wildlife habitat into isolated islands is especially detrimental to threatened or endangered species that are subject to localized extirpations due to natural or human-induced causes. Wildlife movement and migration corridors allow for the recolonization of areas that may have experienced greatly reduced populations or localized extirpations. Wildlife movement and migration corridors also allow for genetic mixing and flow between otherwise segregated populations of a species.

Key Steps	Sources of Information
▪ Include a description of the location and type of movement or migration corridors and the species it would apply to ▪ Identify, evaluate, and map in GIS all habitat conditions (including potentially important landscape linkages that could support and facilitate the movement and dispersal of substantial numbers of species between blocks of open space essential for long-term plant/wildlife viability	▪ USFWS and CDFG and specific species contacts ▪ Review literature on movement and migration corridors and habitat linkages ▪ Review of aerial photographs and field surveys to determine potential for movement or migration corridors

Wetlands and Other Waters of the United States

Wetlands and other waters of the United States, including lakes, rivers, and streams, are afforded protection under federal and state laws. Special aquatic resources, which include seasonal wetlands and vernal pools, are considered an important subset of these waters because of their importance to plant and wildlife species.

Key Steps	Sources of Information
▪ Description of study methodologies. ▪ Background information on the CWA (e.g., USACE and RWQCB) and CDFG permitting ▪ Description of vegetation, soils, and hydrology in the project study area pursuant to the USACE Wetland Delineation Manual (Environmental Laboratory, 1987) and the guidance detailed in A Field Guide to Lake and Streambed Alteration Agreements Sections 1600-1607 (Environmental Services Division, January 1994) ▪ Map depicting the field survey results ▪ Prepare wetland delineation report	▪ Results of wetland delineation survey ▪ Wetland Delineation Manual (Environmental Laboratory, most current) ▪ A Field Guide to Lake and Streambed Alteration Agreements Sections 1600-1607 (Environmental Services Division, most current

3.7.4 Impact Analysis and Mitigation Strategies

A. METHODOLOGY FOR IMPACT ANALYSIS

The purpose of this methodology is to assess potential project-level impacts as defined by the significance criteria listed below. The analysis will follow the steps summarized in the table below.

B. SIGNIFICANCE CRITERIA

According to State CEQA Guidelines Appendix G, the project would result in a significant impact on biological resources if it would:

- Have a substantial adverse effect, either directly or through habitat modification, on any species identified as a candidate, sensitive, or special-status species in local or regional plans, policies, or regulations, or by CDFG or USFWS;
- Have a substantial adverse effect on any riparian habitat or other sensitive natural community identified in local or regional plans, policies, regulation or by the CDFG or USFWS;
- Have a substantial adverse effect on federally protected wetlands, as defined by CWA Section 404 (including but not limited to marsh, vernal pool, and coastal wetlands) through direct removal, filling, hydrological interruption, or other means;
- Interfere substantially with the movement of any native resident or migratory fish or wildlife species, or with established native resident or migratory wildlife corridors, or substantially impede the use of native wildlife nursery sites;
- Conflict with the provisions of an adopted habitat conservation plan (HCP), natural communities conservation plan (NCCP), or other approved local, regional, or state conservation plans; or
- Conflict with any local policies or ordinances protecting biological resources, such as a tree preservation policy or ordinance.

General indicators of significance, based on guidelines or criteria in NEPA, CEQA, CWA, CESA, ESA, and California Fish and Game Code, include:

- Potential modification or destruction of habitat, movement/migration corridors, or breeding areas for endangered, threatened, rare, or other special-status species.

- Potential measurable degradation of protected habitats, sensitive natural vegetation communities, wetlands, or other habitat areas plans, policies, or regulations.
- Potential loss of a substantial number of any species that could affect the abundance or diversity of that species beyond the level of normal variability.

C. ENVIRONMENTAL CONSEQUENCES

Topic	Issues to Evaluate
▪ Disturbance or Loss of Special-Status Wildlife species or their habitat	▪ Identify species and habitat affected ▪ Type of impact, including loss of habitat, effects on breeding, movement, seasonality ▪ Direct or indirect impact ▪ Temporary or permanent impact ▪ Construction and operation impacts ▪ Analyze if the impact can be avoided through the use of timing constraints ▪ Determine if impacts will result in fragmentation or isolation of important wildlife habitats or the disruption of movement corridors ▪ Will this conflict with any local policies or ordinances protecting biological resources, such as a tree preservation policy or ordinance? ▪ Is this a substantial adverse effect, either directly or through habitat modification, on any species identified as a candidate, sensitive, or special-status species in local or regional plans, policies, or regulations, or by CDFG or USFWS? ▪ Will it interfere substantially with the movement of any native resident or migratory fish or wildlife species, or with established native resident or migratory wildlife corridors, or impede the use of native wildlife nursery sites? ▪ Will it conflict with the provisions of an adopted HCP, NCCP, or other approved local, regional, or state conservation plan?
▪ Protected wetlands as defined by CWA Section 404 (marsh, vernal pool, and coastal wetlands)	▪ Determine the type and amount of habitat and potential impacts by direct removal, filling, hydrological interruption, or other means ▪ Determine if impacts will result in fragmentation or isolation of important wildlife habitats or the disruption of movement corridors ▪ Will there be a substantial adverse effect on federally protected wetlands, as defined by CWA Section 404, through direct removal, filling, hydrological interruption, or other means?
▪ Loss of Habitat (e.g., oak woodlands, riparian)	▪ Type and amount of habitat and any local or regional plans, policies or regulations. Indirect or direct effects? Permanent or temporary? Does it result in fragmentation or isolation of important wildlife habitats or the disruption of movement corridors? ▪ Will it conflict with any local policies or ordinances protecting biological resources, such as a tree preservation policy or ordinance? ▪ Will it conflict with the provisions of an adopted habitat conservation plan (HCP), natural communities conservation plan (NCCP), or other approved local, regional, or state habitat conservation plan?

D. MITIGATION

The Section Environmental Teams will:

Review mitigation strategies described in the CEQA Findings of Fact (November 2005) and the Record of Decision (November 18, 2005) for the statewide EIR/EIS and develop project-level measures consistent with strategies to avoid or minimize impacts. Also the teams will review the biological resources and wetlands technical reports and environmental document sections for the Bay Area to Central Valley EIR/EIS.

- Identify specific measures and/or strategies to avoid, minimize, and compensate for potential adverse effects and impacts to biological resources, including wetlands. These may include site-specific measures, off-site compensation, and/or area-wide or regional mitigation strategies.
- Describe implementation of specific measures and/or strategies to avoid, minimize, and compensate for adverse project related impacts to these species and their habitats for special-status plant and wildlife species with potential to occur in the RSA.
- Identify specific strategies (e.g., on-site modified project features [e.g., bridge instead of a culvert], off-site compensation, mitigation banking, etc.) to avoid, minimize, and compensate for potential adverse effects and impacts to special aquatic resources and important landscape linkages that support and facilitate the movement and dispersal of substantial numbers of common and special-status species that connect blocks of open space essential for long-term plant/wildlife viability regionally.
- Identify strategies to mitigate direct and indirect impacts to biological resources conservation and mitigation land, if applicable.

E. CUMULATIVE

See *Caltrans Cumulative Impact Assessment Guidance*, which is applicable to non-highway projects: (http://www.dot.ca.gov/ser/cumulative_guidance/approach.htm). The following steps serve as guidelines for identifying and assessing cumulative impacts:

1. Determine if a cumulative impact analysis will be required for biological resources and wetlands.
   - Prior to conducting the analysis of the project, coordinate with the Program Management Team and Section Environmental Team Cumulative Lead to determine whether biological resources and wetlands will be considered in the cumulative impact analysis. This process is initiated during project scoping and continues throughout the NEPA/CEQA analysis. Assume cumulative impact analysis will be required for any impacts even if these impacts are small or are mitigated to a less than significant level. Only resources with no or beneficial impacts (before or after mitigation) will not be required to be included in the cumulative impact analysis.
2. Define the geographic boundary or Resource Study Area for each resource to be addressed in the cumulative impact analysis. This may result in more than one RSA per resource (e.g., for biology you may have more than one habitat or species RSA;). Do not make arbitrary decisions about the boundary of the RSA; you should be able to explain why the boundary was chosen based on environmental characteristics.
   - Submit RSA(s) to the Section Environmental Team Cumulative Lead.
3. Determine method for cumulative impact analysis.

- Coordinate with the Section Environmental Team Cumulative Lead on the method of analysis (project list and/or plan). In general a project list approach will be taken in conducting the cumulative impact analysis; however, for some topics a plan or combined approach may be necessary (e.g., air, transportation, and land use).

4. Determine list of past, present, and reasonably foreseeable projects to include in the cumulative impact analysis (if using project list method), appropriate plan(s) (if using plan method), or appropriate projects and plans (if using combined project/plan method).
   - The Section Environmental Team Cumulative Lead will identify what projects and/or plans will be used in the analysis. If the analysis is to use a project list approach, the Section Environmental Team Cumulative Lead will provide the Resource Specialist with the database of information for those projects. In some cases the Section Environmental Team Cumulative Lead will coordinate with the Resource Specialists to determine what assumptions will be made in the cumulative impact analysis to account for unknown impacts of future projects (such as for projects in the early planning stages or without a certified environmental document).
5. Describe the current health and the historical context of each resource. (http://www.dot.ca.gov/ser/cumulative_guidance/approach.htm)
6. Identify cumulative impacts.
   - Identify if there is a significant cumulative impact without the project.
   - Identify the direct and indirect impacts of the proposed HST project that might contribute to a cumulative impact on the identified resources (this is information that should come from the impact analysis of the proposed HST project). The Resource Specialist will determine if the project contributes to an existing significant cumulative impact or result in a new cumulative impact when the project's impacts are added to the previously less than significant impacts of the other projects (i.e., one that tips the scales from less than significant to significant cumulative impact).
   - Based on the list of past, present, and reasonably foreseeable projects and the impacts of those projects and the direct and indirect impacts described above for the proposed HST project, or on analysis of the project in relation to existing plans, assess the potential cumulative impacts and state whether the project's contribution to a cumulative impact is "cumulatively considerable" as defined in Guidelines 15065(a)(3).
7. Identify mitigation for significant cumulative impacts. Coordinate with the Section Environmental Team Cumulative Lead. (http://www.dot.ca.gov/ser/cumulative_guidance/approach.htm)
8. Document results.
   - Summarize the results of the cumulative impact analysis for biological resources and wetlands. This summary should include the identification of resources considered in the analysis, the RSA(s) for each resource, the conclusions concerning the health and historical context of understanding the resource, the proposed project impacts that might contribute to a cumulative impact, and the conclusions of the analysis. Describe the other reasonably foreseeable actions and/or plans considered in the cumulative impact analysis as part of the Cumulative Impacts section of the EIR/EIS.

3.7.5 Products

A. TECHNICAL REPORT

1. Wetland Delineation report

2. Biological Resources and Wetlands report
3. Biological Assessment (if needed)

B. PROJECT EIR/EIS

1. Summary/table for EIR/EIS Executive Summary
2. Section: Biological Resources and Wetlands
3. Section: Cumulative Impacts

3.8 Hydrology and Water Resources

3.8.1 Laws, Regulations, and Orders

Key regulations for hydrology and water resources that are most relevant to the proposed project are summarized below.

A. FEDERAL

National Environmental Policy Act (NEPA) [42 U.S.C. Section 4321 et seq.]

NEPA requires the consideration of potential environmental effects, including potential effects to hydrology and water resources, in the evaluation of any proposed Federal agency action. NEPA also obligates federal agencies to consider the environmental consequences and costs in their projects and programs as part of the planning process. General NEPA procedures are set forth in the Council on Environmental Quality (CEQ) regulations 23 CFR 771.

Clean Water Act [33 U.S.C. Section 1251 et seq.]

The Clean Water Act (CWA) is the primary Federal law that protects the quality of the nation's surface waters, including lakes, rivers, and coastal wetlands. The primary principle is that any discharge of pollutants into the nation's waters is prohibited unless specifically authorized by a permit; permit review is the CWA's primary regulatory tool. The applicable sections of the CWA are further discussed below.

- Permit for Dredge and Fill Material in Waters and Wetlands [Section 404]

  Section 404 establishes a permit program administered by the United States Army Corps of Engineers (USACE), which regulates the discharge of dredged or fill material into waters of the United States (including wetlands)

- National Pollutant Discharge Elimination System [Section 402]

  Section 402 Establishes a permitting system for the discharge of any pollutant (except dredge or fill material) into waters of the United States. A National Pollutant Discharge Elimination System (NPDES) permit is required for discharges subject to Section 402 of the CWA

- Water Quality Certification [Section 401]

  Section 401 requires that an applicant for a federal license or permit allowing activities that would result in a discharge to waters of the United States obtain a state certification that the discharge complies with other provisions of the CWA. The Regional Water Quality Control Boards (RWQCBs) administer the certification program in California.

- Water Quality Impairments [Section 303(d)]

  This section requires each state to provide a list of impaired waters that do not meet or are expected not to meet state water quality standards as defined by Section 303(d), and to develop total maximum daily loads from all pollution sources (TMDLs) for such impaired water bodies

Section 10 of Rivers and Harbors Act [33 U.S.C. Section 401 et seq.]

Section 10 of the Rivers and Harbors Act requires a permit for creating obstructions (including excavation and fill activities) to the navigable waters of the United States. Navigable waters are defined as those water bodies subject to the ebb and flow of the tide and/or that are utilized, in their natural condition or by reasonable improvements, as means to transport interstate or foreign commerce.

Section 14 of Rivers and Harbors Act [33 U.S.C. Section 408]

Section 14 of the Rivers and Harbors Act requires permission for the use, including modifications or alterations, of any flood control facility work built by the United States to ensure that the usefulness of the federal facility is not impaired. The permission for occupation or use is to be granted by "appropriate real estate instrument in accordance with existing real estate regulations". For the USACE facilities, the Section 408 approval, known as Section 408 permit, is required.

Floodplain Management [Executive Order 11988]

Executive Order 11988 requires that Federal agency construction, permitting, or funding of a project must avoid incompatible floodplain development, be consistent with the standards and criteria of the National Flood Insurance Program, and restore and preserve natural and beneficial floodplain values.

National Flood Insurance Act [42 U.S.C. Section 4001 et seq.]

The National Flood Insurance Act addresses both the need for flood insurance and the need to lessen the devastating consequences of flooding.

Floodplain Management and Protection [U.S. DOT Order 5650.2] and Flood Disaster Protection Act [42 U.S.C. Sections 4001 to 4128]

The purpose of these acts is to identify flood-prone areas and provide insurance. The act requires purchase of insurance for buildings in special flood-hazard areas.

B. STATE

California Environmental Quality Act (CEQA) [Section 21000 et seq.] and CEQA Guidelines [Section 15000 et seq.]

CEQA requires state and local agencies to identify the significant environmental impacts of their actions, including potential significant impacts to hydrology and water resources, and to avoid or mitigate those impacts, when feasible

Porter-Cologne Water Quality Act [California Water Code Section 13000 et seq.]

The Porter-Cologne Water Quality Act requires projects that are discharging or proposing to discharge wastes that could affect the quality of the state's water, to file a Report of Waste Discharge with the appropriate RWQCBs. The act also provides for the development and periodic reviews of basin plans that designate beneficial uses of California's major rivers and groundwater basins and establish water quality objectives for those waters. Basin plans are primarily implemented by using the NPDES permitting system to regulate waste discharges so that water quality objectives are met.

State Water Resources Control Board (SWRCB)

The SWRCB allocates water rights; adjudicates water rights disputes; develops statewide water protection plans; establishes water quality standards, and guides the nine regional RWQCBs in the major watersheds of the state.

Streambed Alteration Agreement [Sections 1601 to 1603] of the California Fish and Game Code

California Fish and Game Code Sections 1601 to 1603 requires agencies to notify the California Department of Fish and Game (CDFG) prior to implementing any project that would divert, obstruct, or change the natural flow or bed, channel, or bank of any river, stream, or lake

Cobey-Alquist Flood Plain Management Act [California Water Code Section 8400 et seq.]

This act documents the State's intent to support local governments in their use of land use regulations to accomplish floodplain management and to provide assistance and guidance as appropriate.

C. REGIONAL AND LOCAL REGULATORY FRAMEWORK

- Regional Water Quality Control Boards
  - Basin Plans and Water Quality Objectives
  - Construction Activities, National Pollutant Discharge Elimination System (NPDES) General Construction Permit
  - Dewatering Activities (permit varies by region)
- Local Jurisdiction Stormwater Management Programs
- General Plan Policies and Ordinances
  - Stream setbacks, flood management
- Local Jurisdiction Grading Codes

3.8.2 Affected Environment

A. DEFINITION OF RESOURCE STUDY AREA (RSA)

Affected environment should reflect the baseline conditions, which are defined by the California Environmental Quality Act (CEQA) as the conditions that exist at the time that the Notice of Preparation was filed.

Sources of Information	Resource Study Area
▪ Conceptual design and project plans and profiles ▪ Project description ▪ Drainage report (if available) ▪ Hydraulics study report (if available) ▪ Floodplain Risk Assessment report (if available)	▪ *Surface hydrology and water quality RSA* - proposed project's physical ground disturbance footprint (e.g., stations, track, equipment storage areas, temporary construction easements and so forth) and receiving waters of project runoff o Use this to evaluate indirect impacts o Particular attention should be given to any areas where facilities would be located within or cross surface water bodies ▪ *Hydrogeology and groundwater quality RSA* - aquifer(s) underlying the proposed project's physical ground disturbance footprint o Particular attention should be given to areas of high groundwater which could be encountered during excavation and grading activities o Consider connectivity to underlying aquifers, which may be used as a water supply ▪ *Flooding RSA* - FEMA-designated flood hazard areas located within the proposed project's physical ground disturbance footprint, as well as any areas where flood frequency, extent, and duration could be affected by the project o Consider the volume of runoff and project-related structures which could impede or

Sources of Information	Resource Study Area
	redirect flood flows

Climate, Precipitation, and Topography

Key Steps	Sources of Information
▪ Regional average, minimum and maximum temperature in region ▪ Regional annual average precipitation, type (rain or snow), seasonality (months of greatest/least rainfall) ▪ Major topographic features, range of elevations, slope steepness, etc.	▪ Climate and Precipitation o Statewide Program (Program) Environmental Impact Statement/Environmental Impact Report (EIS/EIR) o California Data Exchange Center (http://cdec.water.ca.gov/) o Western Regional Climate Center (http://www.wrcc.dri.edu/) o California Irrigation Management Information System (CIMIS) (http://www.cimis.water.ca.gov/cimis/welcome.jsp) o California Climate Data Archive (http://www.calclim.dri.edu/) ▪ Topography (cross reference *Geology, Soils, and Seismicity* technical report and Program EIS/EIR) o U.S. Geologic Survey (USGS) Topographic Maps and Digital Elevation Model (DEM) (GIS data) ▪ Conceptual design and project plans and profiles ▪ Project description

Regional Hydrology and Water Quality

Key Steps	Sources of Information
▪ Broad-scale surface water hydrology o major lakes, reservoirs, rivers, streams, canals, floodplains o refer to GIS maps showing and labeling each of these ▪ Surface water quality o major water quality impairments ▪ Groundwater basins o major aquifers, volume, depths, quality, overdraft conditions if any	▪ Program EIS/EIR and Program technical reports prepared by regions for statewide system ▪ Water features o USGS Topographic Maps o Hydro 24 blueline o Layer 610 ▪ Floodplains o Federal Emergency Management Agency (FEMA) maps; Flood Insurance Rate Map (FIRM) ▪ Water quality o Clean Water Act Section 303(d) list of water quality impaired segments; maintained by SWRCB and RWQCBs ▪ Groundwater o California Department of Water Resources (DWR) Bulletin 118 (http://www.groundwater.water.ca.gov/bulletin118/) o USGS Ground Water Atlas of United States

Local Hydrology and Water Quality

Key Steps	Sources of Information
▪ Floodplain o Identify 100-year floodplains within RSA(s) using FEMA maps and FIRMS to show Special Flood Hazard Areas (SFHAs) o Map as overlay using GIS and SPOT imagery o Provide narrative summary of floodplains in RSA(s), referencing appendix containing mapping ▪ Surface Waters (includes impaired bodies) o Identify surface waters (lakes, rivers, streams, creeks) within RSA(s) o Obtain available hydrology data pertaining to the identified lakes, rivers, streams or creeks. If the available information is not sufficient, determine if and what additional hydrology data is to be generated by the regional team o Map as overlay using GIS and SPOT imagery o Provide narrative summary of surface waters	▪ Program EIS/EIR and Program technical reports prepared by regions for statewide system ▪ Water features o USGS Topographic Maps o Hydro 24 blueline o Layer 610 ▪ Floodplains o Federal Emergency Management Agency (FEMA) maps; Flood Insurance Rate Map (FIRM) ▪ Water quality o Clean Water Act Section 303(d) list of water quality impaired segments; maintained by SWRCB and RWQCBs ▪ Groundwater o DWR Bulletin 118 (http://www.groundwater.water.ca.gov/bulletin118/)

Key Steps	Sources of Information
within RSA(s), referencing appendix containing mapping o Identify CWA 303 (d) listed water bodies ▪ Erosion o Identify soils susceptible to erosion within RSA(s) o Map as overlay using GIS and SPOT imagery o Provide narrative summary of soil erosion potential within RSA(s), referencing appendix containing mapping ▪ Groundwater o Identify site-specific conditions with respect to aquifers and areas with shallow groundwater o Map as overlay using GIS and SPOT imagery o Narrative summary of any known groundwater quality impairments or threats	▪ USGS Ground Water Atlas of United States ▪ Highly erodible soils o STATSGO GIS databases

3.8.3 Impact Analysis and Mitigation Strategies

A. METHODOLOGY FOR IMPACT ANALYSIS

Analyze direct and indirect impacts related to hydrology and water resources through quantitative analysis, and where necessary, with qualitative analysis. The analysis should consider both construction and operation of the High-Speed Train (HST) system. Where possible, the analysis should be based on a review of available reports and data, discussions with agency representatives in the region, field investigation, hydrology and hydraulic modeling (prepared by the Section Engineering Teams) and professional judgment. Analysis should focus on the proposed project's potential to alter drainage patterns, the volume or characteristics of site runoff, and the risk of personal injury, loss of life, and damage to property resulting from hydrologic and flooding conditions in the RSA(s).

For all impacts, determine significance of impacts and where permit applications will be needed and provide analysis to support future permit review. GIS databases will be developed for each project alignment segment. All GIS data should be developed: (a) as part of project design; or (b) from available federal, state and local sources (specific source would depend on the layer in question).

Types of Impacts	Description of Impacts
▪ Construction activities with potential for impacts to hydrology and water	▪ Soil-disturbing activity (e.g., excavation and grading), which can lead to erosion and sedimentation ▪ Use of construction-related hazardous materials, which could result in spills that would impact surface waters ▪ Excavation in areas of high groundwater, which could result in impacts to groundwater quality or quantity from dewatering activities and direct exposure of groundwater to sediment and other

Types of Impacts	Description of Impacts
	contaminants ▪ Construction within a designated flood zone, which could pose a risk to workers
▪ Operational impacts result from either ongoing activities of the HST system or the physical impact on the landscape by project facilities such as the stations, parking structures/lots, support facilities, and columns supporting elevated structures	▪ Increases in impervious surfaces as a result of the project, leading to increases in the timing and volume of water runoff ▪ Changes to or interruptions in the local drainage infrastructure as a result of the proposed project design, potentially leading to localized or regional drainage impacts (e.g., flooding) ▪ Creation of significant new sources of pollutants (e.g., parking lots and maintenance facilities), leading to new sources of contaminated runoff ▪ Location of project facilities below the naturally occurring water table, with potential impacts related to flooding of project facilities and changes in groundwater quality and/or quantity ▪ Location of project facilities within a designated floodplain, exposing the project to risks related to flooding, as well as subjecting other areas to impacts resulting from changes in the location and or direction of flood flows

The following methods should be used to analyze impacts to floodplains, surface water hydrology, surface water quality, and groundwater for the *Hydrology and Water Quality* technical report.

Floodplains

- Identify the potential impacts to 100-year floodplains, using the GIS database layers for the proposed alternative alignments and the database layer for floodplains.
- Quantify impacts and present in tabular form.
- Qualitatively discuss the potential of each alternative alignment to increase flood height.
- Qualitatively address incompatibility with floodplain development and preservation of floodplain values.
  - Prepare *Floodplain Risk Assessment* for alternatives, as appropriate for a given section.

Surface Water Hydrology

- Identify the potential impacts to surface waters, using the GIS database layers for the proposed alternatives and the database layer for surface waters.
- Quantify potential impacts and present in tabular form.
  - Linear impact for streams
  - Area impacts for other water bodies
- Identify and incorporate design practices to avoid or minimize project impacts.

Surface Water Quality

- Describe impacts to surface water quality from discharges associated with HST construction.
  - Consider accidental releases of construction-related hazardous materials, ground disturbance and associated erosion and sedimentation, stormwater discharges, and dewatering discharges (where applicable).
  - Provide particular attention and detail in areas where work would be conducted within a surface water body, due to direct mechanism for contaminants to enter surface waters.
- Describe practices from Stormwater Pollution Prevention Plan (SWPPP), including a spill prevention plan, that will avoid or minimize construction impacts.
- Describe impacts to surface water quality from discharges associated with operation and maintenance activities, focusing on stormwater runoff from facilities.
- Describe Best Management Practices (BMPs) for stormwater. Identify the BMPs for each of the following categories: pollution prevention, treatment, construction, and maintenance.

Groundwater

- Identify the potential impacts to groundwater, using the GIS database layers for the proposed alternatives and the database layer for groundwater.
- Consider the following for construction-related impacts:
  - Potential for contaminated site runoff to percolate to aquifer, particularly the case where there is shallow groundwater
  - Areas where excavation activities would result in excursions below the groundwater table, and direct mechanism for contaminants to enter groundwater
  - Volumes of dewatering and potential depletion of groundwater supplies
- Consider the following for operational impacts:
  - Effects on groundwater recharge, with particular attention given to identified recharge areas
  - Potential for contaminated stormwater runoff to percolate to aquifer, particularly the case where there is shallow groundwater
- Describe potential significance of area impacts and present in tabular form and on GIS maps, and relate these to CEQA significance criteria

Beneficial Impacts

- Describe potential benefits for reducing non-point source pollutants from reduced vehicle miles traveled (VMT) (mode shift from automobile)
  - Refer to the *Traffic, Transit, Circulation, Parking, and Freight Rail Report* for VMT data

B. SIGNIFICANCE CRITERIA

According to the State CEQA Guidelines Appendix G, a project would result in a significant impact on hydrology and water resources if it would:

- Violate of any water quality standards or waste discharge requirements.
- Substantially deplete groundwater supplies or interfere substantially with groundwater recharge such that there would be a net deficit in aquifer volume or a lowering of the local groundwater

table level (e.g., the production rate of pre-existing nearby wells would drop to a level which would not support existing land uses or planned uses for which permits have been granted).

- Substantially alter the existing drainage pattern of the site or area, including through the alteration of the course of a stream or river, in a manner which would result in substantial erosion or siltation on- or off-site.
- Substantially alter the existing drainage pattern of the site or area, including through the alteration of the course of a stream or river, or substantially increase the rate or amount of surface runoff in a manner which would result in flooding on- or off-site.
- Create or contribute runoff water which would exceed the capacity of existing or planned stormwater drainage systems or provide substantial additional sources of polluted runoff
- Otherwise substantially degrade water quality.
- Place housing within a 100-year flood hazard area as mapped on a federal Flood Hazard Boundary or Flood Insurance Rate Map or other flood hazard delineation map.
- Place structures within a 100-year flood hazard area which would impede or redirect flood flows.
- Expose people or structures to loss, injury, or death involving flooding, including flooding as a result of the failure of a levee or dam.

C. ENVIRONMENTAL CONSEQUENCES

Topic	Issues to Evaluate
Floodplains	▪ Extent that the project is within 100-year floodplains. ▪ Potential for the project to increase flood height. ▪ Potential for the project to result in incompatibility with floodplain development. ▪ Are there design practices to avoid or minimize project impacts?
Surface Water Hydrology	▪ Extent that the project may affect surface waters. ▪ Are there design practices to avoid or minimize project impacts?
Surface Water Quality	▪ Potential for the project to affect surface water quality from discharges associated with HST construction. ▪ Potential for the project to affect surface water quality from discharges associated with operation and maintenance activities
Groundwater	▪ Extent that the project may affect groundwater during construction and operation of the HST.
Beneficial Impacts	▪ Potential benefits for reducing non-point source pollutants from reduced VMTs (mode shift from automobile).

D. MITIGATION

The Section Environmental Teams will:

- Review mitigation strategies described in the CEQA Findings of Fact (November 2005) and the Record of Decision (November 18, 2005) for the Program EIR/EIS and develop project-level measures consistent with strategies to avoid or minimize impacts. Also the teams will review the hydrology and water quality technical reports and environmental document sections for the Bay Area to Central Valley EIR/EIS.

- Identify mitigation measures for avoidance and minimization of impacts to be incorporated into project designs to reduce impacts related to hydrology and water quality

- Coordinate with design engineers to incorporate avoidance and minimization measures, and include BMP measures/practices for pollution prevention, treatment, construction, and maintenance. Identify BMPs, and to the extent possible, provide information which BMPs would be most appropriate and effective. Avoidance and minimization measures can be accomplished through these practices.

- Resources for design approaches, mitigation measures, and BMPs include the following:

Types of Impacts	Description of Impacts
▪ Caltrans stormwater program	▪ http://www.dot.ca.gov/hq/env/stormwater/index.htm
▪ Caltrans stormwater design guidance	▪ http://www.dot.ca.gov/hq/oppd/stormwtr
▪ Caltrans construction stormwater control	▪ http://www.dot.ca.gov/hq/construc/stormwater/stormwater1.htm
▪ Caltrans maintenance manual (including a section on water quality)	▪ http://www.dot.ca.gov/hq/maint/manual/maintman.htm

E. CUMULATIVE

See the *Caltrans Cumulative Impact Assessment Guidance*, which is applicable to non-highway projects: (http://www.dot.ca.gov/ser/cumulative_guidance/approach.htm). The following steps serve as guidelines for identifying and assessing cumulative impacts:

1. Determine whether a cumulative impact analysis will be required for hydrology and water resources
   - Prior to conducting the analysis of the project, coordinate with the Program Management Team and Section Environmental Team Cumulative Lead to determine whether hydrology and water resources will be considered in the cumulative impact analysis. This process is initiated during project scoping and continues throughout the NEPA/CEQA analysis. Assume cumulative impact analysis will be required for any impacts even if these impacts are small or are mitigated to a less than significant level. Only resources with no or beneficial impacts (before or after mitigation) will not be required to be included in the cumulative impact analysis.

2. Define the geographic boundary or Resource Study Area for each resource to be addressed in the cumulative impact analysis. This may result in more than one RSA per resource (e.g., for biology you may have more than one habitat or species RSA; for air quality you may have a CO impact with a small RSA or a basinwide RSA for other impacts). Do not make arbitrary decisions about the boundary of the RSA; you should be able to explain why the boundary was chosen based on environmental characteristics.
   - Submit RSA(s) to the Section Environmental Team Cumulative Lead

3. Determine method for cumulative impact analysis.
   - Coordinate with the Section Environmental Team Cumulative Lead on the method of analysis (project list and/or plan). In general a project list approach will be taken in conducting the cumulative impact analysis, however for some topics a plan or combined approach may be necessary (e.g., air, transportation, and land use)

4. Determine list of past, present, and reasonably foreseeable projects to include in the cumulative impact analysis (if using project list method), appropriate plan(s) (if using plan method), or major projects and appropriate plans if using combined list and plan method
   - The Section Environmental Team Cumulative Lead will identify what projects or plans will be used in the analysis. If the analysis is to use a project list approach, the Section Environmental Team Cumulative Lead will provide the Resource Specialist with the database of information for those projects. In some cases the Section Environmental Team Cumulative Lead will coordinate with the Resource Specialists to determine what assumptions will be made in the cumulative impact analysis to account for unknown impacts of future projects (such as for projects in the early planning stages or without a certified environmental document).
5. Describe the current health and the historical context of each resource (http://www.dot.ca.gov/ser/cumulative_guidance/approach.htm)
6. Identify cumulative impacts
   - Identify if there is a significant cumulative impact without the project
   - Identify the direct and indirect impacts of the proposed HST project that might contribute to a cumulative impact on the identified resources (this is information that should come from the impact analysis of the proposed HST project). The Resource Specialist will determine if the project contributes to an existing significant cumulative impact or result in a new cumulative impact when the project's impacts are added to the previously less than significant impacts of the other projects (i.e., one that tips the scales from less than significant to significant cumulative impact).
   - Based on the list of past, present, and reasonably foreseeable projects and the impacts of those projects and the direct and indirect impacts described above for the proposed HST project, or on analysis of the project in relation to existing plans, assess the potential cumulative impacts and state whether the project's contribution to a cumulative impact is "cumulatively considerable" as defined in Guidelines 15065(a)(3).
7. Identify mitigation for significant cumulative impacts. Coordinate with the Section Environmental Team Cumulative Lead (http://www.dot.ca.gov/ser/cumulative_guidance/approach.htm)
8. Document results
   - Summarize the results of the cumulative impact analysis for hydrology and water resources. This summary should include the identification of resources considered in the analysis, the RSA(s) for each resource, the conclusions concerning the health and historical context of understanding the resource; the proposed project impacts that might contribute to a cumulative impact, and the conclusions of the analysis. The Section Environmental Team Cumulative Lead will describe the other reasonably foreseeable actions considered in the cumulative impact analysis as part of the Cumulative Impacts section of the EIR/EIS.

3.8.4 Products

A. TECHNICAL REPORT

1. Hydrology and Water Quality report
2. Floodplain Risk Assessment, as appropriate

B. PROJECT EIR/EIS

1. Summary/table for EIR/EIS Executive Summary

2. Section: Hydrology and Water Quality
3. Section: Cumulative Impacts

3.9 Geology, Soils, and Seismicity

3.9.1 Laws, Regulations, and Orders

Key regulations pertaining to geology, soils, and geologic resources that are most relevant to the proposed project are summarized below.

A. FEDERAL

National Environmental Policy Act (NEPA) [42 U.S.C. Section 4321 et seq.]

NEPA requires the consideration of potential environmental effects, including potential effects to geology, soils, and geologic resources, in the evaluation of any proposed Federal agency action. NEPA also obligates federal agencies to consider the environmental consequences and costs in their projects and programs as part of the planning process. General NEPA procedures are set forth in the Council on Environmental Quality (CEQ) regulations 23 CFR 771.

B. STATE

California Environmental Quality Act (CEQA) [Section 21000 et seq.] and CEQA Guidelines [Section 15000 et seq.]

CEQA requires state and local agencies to identify the significant environmental impacts of their actions, including potential significant impacts to geology, soils, and geologic resources, and to avoid or mitigate those impacts, when feasible.

Alquist-Priolo Earthquake Fault Zoning Act [California Code of Regulations Section 2621 et seq.]

This act provides policies and criteria to assist cities, counties, and state agencies in the exercise of their responsibility to prohibit the location of developments and structures for human occupancy across the trace of active faults.

Seismic Hazards Mapping Act [Public Resources Code Sections 2690 to 2699.6]

The Seismic Hazards Mapping Act requires that site-specific geotechnical investigations be performed prior to permitting development within the seismic hazard zones.

Surface Mining and Reclamation Act [Public Resources Code, Division 2, Chapter 9, Section 2710 et seq.]

This act was enacted to address the need for a continuing supply of mineral resources, and to prevent or minimize the adverse impacts of surface mining to public health, property and the environment.

California Building Standards Code [California Code of Regulations Title 24]

The California Building Standards Code governs the design and construction of buildings, associated facilities and equipment and applies to buildings in California.

C. REGIONAL AND LOCAL REGULATORY FRAMEWORK

- General Plan Policies and Ordinances
  - Geology-related regulations as a basis for land use planning decisions, including geologic hazards policies, hillside ordinances, etc.
- Local Jurisdiction Grading Codes

3.9.2 Affected Environment

A. DEFINITION OF RESOURCE STUDY AREA (RSA)

Sources of Information	Resource Study Area
▪ Conceptual engineering plans and profiles ▪ Project description ▪ Other available geotechnical information	▪ The RSA for the *Geology, Soils, and Seismicity* technical report considers many elements related to the geology and soil. The RSA for each is described briefly below: o Topography ▪ Regional setting: geomorphic province level ▪ More detailed information along project alignment o Geology ▪ Regional setting: geomorphic province/2-degree sheet scale ▪ More detailed information along project's alignment o Soils ▪ Project alignment o Landslide hazards ▪ Areas at risk within and adjacent to project alignment o Surface fault rupture ▪ Faults intersecting with and adjacent to project alignment o Ground shaking ▪ All faults sufficiently close to pose strong ground shaking risk, depending on fault MCE, substrate, and modeled peak ground acceleration [PGA] at site o Liquefaction, other ground failure, seismically induced landslides ▪ Hazard zones within and adjacent to project alignment o Tsunami, seiche, dam failure inundation ▪ Features located such that they pose a risk to alignment (the distance will vary depending on type of hazard, topography, etc.) o Subsurface gas hazard ▪ Half-mile radius around proposed project alignments, stations, and maintenance facilities o Mineral resources

Sources of Information	Resource Study Area
	▪ Half-mile radius around proposed project alignments ▪ Two mile radius around proposed stations o Oil and natural gas resources ▪ Half-mile radius around proposed project alignments ▪ Two mile radius around proposed stations ▪ The general RSA around project features are as follows: o At-grade sections ▪ 150-foot radius around proposed project right-of-way o Tunnel and cut-and-cover sections ▪ 200-foot radius around proposed project right-of-way o Cut and fill sections ▪ 150–foot radius around proposed project right-of-way o Aerial sections ▪ 150-foot radius around proposed project right-of-way

Physiography and Regional Geologic Setting

Key Steps	Sources of Information
▪ Identify geomorphic province in which alignment is located. ▪ Describe topographic setting in region and along alignment, including typical, maximum and minimum elevations, slope steepness, etc. ▪ Describe alignment's regional geologic and tectonic setting; structural framework and key structural elements; bedrock units; Quaternary stratigraphy.	▪ Geomorphic province (Norris and Webb 1990, Harden 2004) ▪ Topography o U.S. Geologic Survey [USGS] topographic maps o Digital Elevation Model [DEM] (see project GIS) o Conceptual engineering plans and profiles o Project description o Use at minimum of 5 data points per alignment

Geology of Proposed Alignment

Key Steps	Sources of Information
▪ Provide focused information on geology along proposed project alignment and any alternative alignments. Identify and briefly describe the geologic units present, along with any key structural features. ▪ Include information about state Mineral Resource Zone (MRZ) designations and site stratigraphy that is sufficient enough to provide the background for later discussions of geologic hazards and geological resources.	▪ Most recent available mapping published by USGS ▪ Most recent California Geologic Survey (CGS) maps o The new 30 x 60 compilation quads are a good regional source ▪ Existing GIS layers from Program-level analysis and technical reports ▪ Published geologic literature

Site Soils

Key Steps	Sources of Information
o Identify geologic soil units present along the proposed alignment. ▪ Descriptions should include erosion potential, expansion (shrink-swell) potential, and corrosivity to concrete and uncoated steel. Map units may be required for some attributes, including expansion potential.	▪ SCS County survey ▪ SSURGO data ▪ NRCS WebSoilSurvey ▪ Other as appropriate

B. GEOLOGIC HAZARDS

Landslide Hazards

Key Steps	Sources of Information
▪ Identify and describe any areas of potential slope instability and landsliding. ▪ This section will require a cross-reference to the section on seismically induced landslide hazards, but is intended to cover non-seismic landslide hazards.	▪ Project geotechnical studies, when available ▪ USGS landslide hazards information ▪ CGS landslide information ▪ Where available, CGS Seismic Hazards Zones Maps will provide additional information o If these are used, be careful about overlap/redundancy with focused section on seismically induced landslide hazards.

C. PRIMARY SEISMIC HAZARDS

Surface Fault Rupture

Key Steps	Sources of Information
▪ Identify any State-delineated Earthquake Fault Zones within or adjacent to the proposed alignment alignments. ▪ Identify any other faults that may pose a risk of surface rupture (i.e., other faults known or believed to be Holocene-active based on credible evidence). ▪ To the extent feasible, data review and discussion should include recurrence interval, magnitude of anticipated rupture displacement, and type of slip/separation. ▪ Identify Pleistocene-active structures as a rupture risk.	▪ CGS Official Maps of Alquist-Priolo Earthquake Fault Zones of California o Faults zoned by State of California ▪ CGS Digital Database of Quaternary and Younger Faults (W.A. Bryant, compiler, Ver.2, 2005) ▪ UBC Maps of Known Active Fault Near-Source Zones in California and Adjacent Portions of Nevada o Faults not zoned by State but recognized as active seismic sources by UBC o IBC maps should also be consulted as they are supersede UBC maps ▪ Local jurisdiction zoning o Additional faults not zoned by state but treated as active in local permitting process o Examples of areas where this will likely be needed include Santa Clara County and Los Angeles County ▪ Current geologic literature o Faults with substantial evidence suggesting Holocene activity/surface rupture hazard, but not yet zoned or included in UBC maps o Southern California Earthquake Center web site: www.data.scec.org o Northern California Earthquake Data Center web site: www.ncedc.org

Ground shaking

Key Steps	Sources of Information
▪ Identify faults that pose a strong ground shaking hazard in the vicinity of the proposed alignment and alternatives. ▪ Discussion should include MCE (Maximum Considered Earthquake) and recurrence interval, as well as maximum anticipated ground shaking intensity. ▪ Include a table showing length/location of the proposed alignment and the sites of proposed stations vs. anticipated ground shaking intensity. ▪ Identify high ground motion areas based on a probabilistic PGA having a 2% probability of exceedance in 50 years (CBC standard).	▪ For seismogenic faults in project vicinity—same sources as listed under the Surface Fault Rupture section ▪ For ground shaking intensity, use CGS and USGS ground shaking maps. ▪ For MCE and other earthquake definitions see PMT Technical Memoranda, and the most current Caltrans definition (of approximately Nov. 2009).

D. SECONDARY SEISMIC HAZARDS

Liquefaction and Other Types of Ground Failure

Key Steps	Sources of Information
▪ Identify areas at risk of liquefaction and other types of seismically induced ground failure (differential settlement, ridgetop shattering, etc.). ▪ Discussion should include any State-delineated zones of liquefaction hazard, along with any other relevant information. Other sources will be especially important in areas where State seismic hazards mapping have not been completed yet.	▪ Where CGS Seismic Hazards Zones Maps are available, these should be the primary source to identify areas of liquefaction hazard. ▪ Where CGS Seismic Hazards Zones Maps are not available, use local jurisdiction hazard zoning if judged reliable, or Statewide geologic map unit susceptibility in conjunction with probabilistic seismic hazard maps that provide the PGA having a 2% probability of exceedance in 50 years (CBC standard). ▪ Where published groundwater information is not available, assume shallow groundwater and saturated conditions. ▪ For other types of ground failure, use geologic context based on published geologic mapping, plus PGA with 2% probability of exceedance in 50 years (CBC standard).

Seismically Induced Landslide Hazards

Key Steps	Sources Information
▪ Identify areas at risk of seismically induced landsliding, including (but not necessarily limited to) State-delineated zones of seismically induced landslide hazard. ▪ Any area at risk of landslides and strong ground shaking is likely to be at risk of seismically induced landslides, even if the State has not (yet) delineated a seismic hazard zone; in many cases, this section will need to cross-reference the Landslide Hazards Section.	▪ Where available, use CGS Seismic Hazards Zones Maps published by the CGS to identify landslide hazard zones. ▪ Where these maps are not available characterize the potential for slope instability based on statewide geologic map unit susceptibility in conjunction with slope gradients derived from DEMs; compare results to any available existing landslide mapping, to verify use of appropriate unit strength/slope gradient criteria.

Seismically Induced Flood Hazards

Key Steps	Sources of Information
▪ Identify areas at risk of tsunami or seiche-related flooding. ▪ Identify any areas at risk of dam failure inundation.	▪ CGS and USGS tsunami and seiche hazard assessments ▪ Tsunami and Seiche o NOAA Center for Tsunami Research http://nctr.pmel.noaa.gov/inundation_mapping.html o Seiche mapping generally not available, but potentially available through CGS ▪ Dam Inundation o California Office of Emergency Services maintains maps o County General Plan Background Reports frequently contain this information as well ▪ Local jurisdiction general plans ▪ Geologic and land use context information

Areas of Difficult Excavation

Key Steps	Sources of Information
▪ Identify any portions of the alignment and alternatives where project tunneling or excavation is likely to be difficult. ▪ Identify any potential hazards associated with tunneling and/or excavation in gassy grounds.	▪ If available, use Program geotechnical report. ▪ If a Program geotechnical report is not available, evaluation should be based on geologic conditions as identified from published geologic mapping. ▪ For gassy grounds, use oil field maps, geologic maps, local maps and information, and other published sources for a given area.

E. GEOLOGICAL RESOURCES

Geological Resources

Key Steps	Sources of Information
▪ Identify any active mining operations in the regional setting. ▪ Identify borrow and spoil areas for the proposed project, which may be regulated under Surface Mining and Reclamation Act of 1975 (SMARA). ▪ Estimate amount of construction aggregate required for the project, and determine if demand will exceed local supply.	▪ USGS online mineral commodity producers database

Mineral Resources

Key Steps	Sources of Information
▪ Characterize any mineral resources within or adjacent to the project alignment. ▪ Identify any applicable MRZ zoning under SMARA.	▪ State of California Mineral Land Classification reports ▪ Local jurisdiction general plan, specific/area plans, and ordinances

Fossil Fuel Resources

Key Steps	Sources of Information
▪ Identify the location and extent of any oil and/or natural gas fields intersected by the project alignment. ▪ Identify any related subsurface gas hazards.	▪ Geologic mapping and literature ▪ California Department of Conservation, Division of Oil, Gas, and Geothermal Resources website www.consrv.ca.gov/DOG/index.htm

Geothermal Resources

Key Steps	Sources of Information
▪ Identify any known geothermal resources along the project alignment.	▪ Geologic mapping and literature ▪ California Department of Conservation, Division of Oil, Gas, and Geothermal Resources website www.consrv.ca.gov/DOG/index.htm

3.9.3 Impact Analysis and Mitigation Strategies

A. METHODOLOGY FOR IMPACT ANALYSIS

Geology, Soils, Geologic Hazards, Mineral and Energy Resources Methods

Impacts related to geology, soils, and geologic resources should be analyzed qualitatively, based on a review of published soils and geologic information for the proposed alignment and on professional judgment, in accordance with the current standard of care for geotechnical engineering and engineering geology. Analysis should focus on the proposed project's potential to increase the risk of personal injury, loss of life, and damage to property, including new facilities, as a result of existing geologic conditions in the project area.

3.9.4 Assumptions

Consistent with the general programwide mitigation strategies identified in the Program EIR/EIS (PEIR/PEIS) prepared for the HST Program, analysis should assume the following:

- A site-specific geotechnical and engineering geologic study would be conducted for the proposed project, covering the entire project alignment, performed by appropriately state-licensed personnel with appropriate experience and skills.
- Earthwork will be designed and conducted in accordance with all relevant requirements of Section 19 of the most current Caltrans Standard Specifications.
- All structures will be designed consistent with Caltrans Seismic Design Criteria (reference) or equivalent standards.
- Passive or active gas venting systems and gas collection systems will be installed in areas of subsurface gas hazard, consistent per section engineer's standard.
- Expansive soil hazards can be addressed through over-excavation and replacement with nonexpansive fill, or other measures consistent with Caltrans Standard Specifications.
- Corrosive soil hazards can be address by over-excavation and replacement with noncorrosive fill, by use of corrosion-protected materials, or by other measures consistent with Caltrans Standard Specifications.
- Construction will proceed in accordance with requirements of a Stormwater Pollution Prevention Plan (SWPPP), as discussed in hydrology/water resources.
- Post-construction soil erosion hazard will be addressed by over-excavation and replacement with nonerosive engineered fill, or by the use of geosynthetics, vegetation, rip rap, or other suitable measures consistent with Caltrans Standard Specifications.
- Where appropriate, more detailed mitigation, or alternate methods more applicable to the proposed alignment should be discussed.

A. SIGNIFICANCE CRITERIA

Based on the State CEQA Guidelines, including Appendix G, a project would result in a significant impact if it would:

- Expose people or structures to potential substantial adverse effects, including the risk of loss, injury, or death involving:

- Rupture of a known earthquake fault, as delineated on the most recent Alquist-Priolo Earthquake Fault Zoning Map issued by the State Geologist for the area or based on other substantial evidence of a known fault
- Strong seismic ground shaking
- Seismically-related ground failure, including but not limited to liquefaction
- Seiche or tsunami hazard
- Dam failure inundation hazard
- Landslides, including seismically induced landslides

- Result in substantial soil erosion or the loss of topsoil
- Be located on a geologic unit or soil that is unstable, or that would become unstable as a result of the project, with the potential to result in on- or offsite landslide, lateral spreading, subsidence, liquefaction, or collapse
- Be located on expansive soil, as defined in Table 18-1-B of the current Uniform Building Code, creating substantial risks to life or property
- Construction on corrosive soils, creating substantial risks to life or property
- Result in the loss of availability of a known mineral, petroleum, or natural gas resource of regional or statewide value
- Result in the loss of availability of a locally important mineral resource recovery site
- Be located in an area of subsurface gas hazard, creating substantial risks to life or property

B. ENVIRONMENTAL CONSEQUENCES

Topic	Issues to Evaluate
Surface fault rupture	▪ Potential for facilities damage as a result of surface fault rupture ▪ Potential for financial losses related to facilities damage ▪ Potential life and safety hazards as a result of damage and/or failure related to surface fault rupture ▪ Extent to which risks are addressed by assumptions referenced in the PEIR/EIS ▪ Extent to which design can be used to avoid and minimize property and safety risks ▪ Analysis should consider creep (where applicable) as well as seismogenic rupture.
Seismic ground shaking hazard	▪ Potential for facilities damage as a result of seismic ground shaking ▪ Potential for financial losses related to facilities damage ▪ Potential life and safety hazards as a result of damage and/or failure related to seismic ground shaking ▪ Extent to which risks are addressed by assumptions referenced in the PEIR/EIS ▪ Extent to which design can be used to avoid and minimize property and safety risks ▪ Faults at a substantial distance from the project alignment may have

Topic	Issues to Evaluate
	potential to generate damaging levels of ground shaking.
Liquefaction and other types of seismically induced ground failure	▪ Potential for facilities damage as a result of seismically induced ground failure, including but not limited to liquefaction ▪ Potential for financial losses related to facilities damage ▪ Potential life and safety hazards as a result of damage and/or failure related to liquefaction or other seismically induced ground failure. ▪ Extent to which risks are addressed by assumptions referenced in the programmatic mitigation ▪ Extent to which design can be used to avoid and minimize property and safety risks
Slope failure hazards associated with cut or fill slopes during and following construction, (including consideration of seismically-induced ground motion hazard for cut or fill slopes)	▪ Potential for construction of cut or fill slopes to create or exacerbate slope instability ▪ Associated potential for facilities damage, and corollary financial impacts ▪ Associated risks to life and property ▪ Extent to which risks are addressed by assumptions referenced in the programmatic mitigation ▪ Extent to which design can be used to avoid and minimize property and safety risks
Slope failure hazards associated with pre-existing landslide hazard, including seismically induced landslides	▪ Potential for landslides to affect project facilities; corollary risks to property, finances, life, and safety ▪ Extent to which design can be used to mitigate property and safety risks ▪ Extent to which risks are addressed by assumptions referenced in the programmatic mitigation ▪ Extent to which design can be used to avoid and minimize property and safety risks
Tsunami and seiche hazards	▪ Potential for tsunami to affect project facilities; corollary risks to property, finances, life, and safety ▪ Potential for seiches to affect project facilities; corollary risks to property, finances, life, and safety ▪ Extent to which risks are addressed by assumptions referenced in the programmatic mitigation ▪ Extent to which design can be used to avoid and minimize property and safety risks
Seismically induced dam failure hazards	▪ Potential for inundation related to seismically induced failure of dam or other impoundment to affect project facilities; corollary risks to property, finances, life, and safety ▪ Extent to which risks are addressed by assumptions referenced in the programmatic mitigation ▪ Extent to which design can be used to avoid and minimize property and safety risks
Expansive soils	▪ Is the project alignment located on expansive soils? If so, discuss potential for facilities damage, and any corollary risks to property, project operation, finances, or life and safety.

Topic	Issues to Evaluate
	▪ Extent to which risks are addressed by assumptions referenced in the programmatic mitigation ▪ Extent to which design can be used to avoid and minimize property and safety risks
Corrosive soils	▪ Is the project alignment located on corrosive soils? If so, discuss potential for facilities damage, and any corollary risks to property, project operation, finances, or life and safety ▪ Extent to which risks are addressed by assumptions referenced in the programmatic mitigation ▪ Extent to which design can be used to avoid and minimize property and safety risks
Soil erosion	▪ Potential for project construction to result in accelerated erosion ▪ Extent of mitigation required by project Storm Water Pollution Prevention Plan (SWPPP) ▪ Potential for accelerated erosion on project site during operation. ▪ Loss of topsoil resources—would the project occupy an undeveloped or minimally developed footprint with a fairly intact soil profile, including intact topsoil resource ▪ Extent to which erosion issues are addressed by assumptions referenced in the programmatic mitigation ▪ Extent to which design can be used to avoid and minimize post-construction changes in erosion rate ▪ Discussion may cross-reference to analyses in hydrology/water quality chapter.
Subsurface gas hazards	▪ Is any part of the project alignment (particularly subsurface segments) within an area of known or likely subsurface gas hazard? If so, discuss extent to which risks are addressed by assumptions referenced in PEIR/EIS.
Mineral resources	▪ Potential for project operation to affect availability of mineral, petroleum, or natural gas resources ▪ Demand for and available supply of construction aggregate ▪ Effects may be direct (e.g., alignment crosses known resource), or indirect (e.g., project would result in changed land use patterns, such that mineral resource extraction becomes an incompatible land use and is discontinued).

C. MITIGATION

The Section and Program Management Environmental Teams will:

- Review mitigation strategies described in the CEQA Findings of Fact (November 2005) and the Record of Decision (November 18, 2005) for the Program EIR/EIS and develop project-level measures consistent with strategies to avoid or minimize impacts. Also the teams will review the geologic and soil technical reports and environmental document sections for the Bay Area to Central Valley EIR/EIS.

D. CUMULATIVE

See the *Caltrans Cumulative Impact Assessment Guidance*, which is applicable to non-highway projects: (http://www.dot.ca.gov/ser/cumulative_guidance/approach.htm). The following steps serve as guidelines for identifying and assessing cumulative impacts:

1. Determine if a cumulative impact analysis will be required for geology, soils, and geologic resources
   - Prior to conducting the analysis of the project, coordinate with the Program Management Team and Section Environmental Team Cumulative Lead to determine whether geology, soils, and geologic resources will be considered in the cumulative impact analysis. This process is initiated during project scoping and continues throughout the NEPA/CEQA analysis. Assume cumulative impact analysis will be required for any impacts even if these impacts are small or are mitigated to a less than significant level. Only resources with no or beneficial impacts (before or after mitigation) will not be required to be included in the cumulative impact analysis.
2. Define the geographic boundary or Resource Study Area (RSA) for each resource to be addressed in the cumulative impact analysis. This may result in more than one RSA per resource (e.g., for biology you may have more than one habitat or species RSA; for air quality you may have a CO impact with a small RSA or a basin-wide RSA for other impacts). Do not make arbitrary decisions about the boundary of the RSA; you should be able to explain why the boundary was chosen based on environmental characteristics.
   - Submit RSA(s) to the Section Environmental Team Cumulative Lead
3. Determine method for cumulative impact analysis
   - Coordinate with the Section Environmental Team Cumulative Lead on the method of analysis (project list and/or plan). In general a project list approach will be taken in conducting the cumulative impact analysis; however, for some topics a plan or combined approach may be necessary (e.g., air, transportation, and land use).
4. Determine list of past, present, and reasonably foreseeable projects to include in the cumulative impact analysis (if using project list method), appropriate plan(s) (if using plan method), or a combination of both (if using a combined method)
   - The Section Environmental Team Cumulative Lead will identify what projects or plans will be used in the analysis. If the analysis is to use a project list approach, the Section Environmental Team Cumulative Lead will provide the Resource Specialist with the database of information for those projects. In some cases the Section Environmental Team Cumulative Lead will coordinate with the Resource Specialists to determine what assumptions will be made in the cumulative impact analysis to account for unknown impacts of future projects (such as for projects in the early planning stages or without a certified environmental document).
5. Describe the current health and the historical context of each resource (http://www.dot.ca.gov/ser/cumulative_guidance/approach.htm)
6. Identify cumulative impacts
   - Identify if there is a significant cumulative impact without the project

- Identify the direct and indirect impacts of the proposed HST project that might contribute to a cumulative impact on the identified resources (this is information that should come from the impact analysis of the proposed HST project). The Resource Specialist will determine if the project contributes to an existing significant cumulative impact or result in a new cumulative impact when the project's impacts are added to the previously less than significant impacts of the other projects (i.e., one that tips the scales from less than significant to significant cumulative impact).
- Based on the list of past, present, and reasonably foreseeable projects and the impacts of those projects and the direct and indirect impacts described above for the proposed HST project, or on analysis of the project in relation to existing plans, assess the potential cumulative impacts and state whether the project's contribution to a cumulative impact is "cumulatively considerable" as defined in Guidelines 15065(a)(3)

7. Identify mitigation for significant cumulative impacts. Coordinate with the Section Environmental Team Cumulative Lead (http://www.dot.ca.gov/ser/cumulative_guidance/approach.htm)
8. Document results
   - Summarize the results of the cumulative impact analysis for geology, soils, and geologic resources. This summary should include the identification of resources considered in the analysis, the RSA(s) for each resource, the conclusions concerning the health and historical context of understanding the resource; the proposed project impacts that might contribute to a cumulative impact, and the conclusions of the analysis. The Section Environmental Team Cumulative Lead will describe the other reasonably foreseeable actions considered in the cumulative impact analysis as part of the Cumulative Impacts section of the EIR/EIS.

3.9.5 Products

A. TECHNICAL REPORT

1. Geology, Soils, and Seismicity Report

B. PROJECT EIR/EIS

1. Section: Geology, Soils, Seismicity
2. Cumulative Impacts Section
3. Summary for EIR/EIS Executive Summary

3.10 Hazardous Materials and Wastes

3.10.1 Laws, Regulations, and Orders

Key regulations for hazardous wastes and materials that are most relevant to the proposed project are summarized below.

A. FEDERAL

National Environmental Policy Act (NEPA) [42 U.S.C. Section 4321 et seq.]

NEPA requires the consideration of potential environmental effects, including potential hazardous wastes and materials effects, in the evaluation of any proposed Federal agency action. NEPA also obligates federal agencies to consider the environmental consequences and costs in their projects and programs as part of the planning process. General NEPA procedures are set forth in the Council on Environmental Quality (CEQ) regulations 23 CFR 771.

Resource Conservation and Recovery Act (RCRA) [42 U.S.C. Section 6901 et seq.]

RCRA regulates the identification, generation, transportation, storage, treatment, and disposal of solid and hazardous materials and hazardous wastes.

Comprehensive Environmental Response, Compensation and Liability Act (CERCLA) [42 U.S.C. Section 9601 et seq.]

CERCLA regulates former and newly discovered uncontrolled waste disposal and spill sites. Established the National Priorities List of contaminated sites, and the “Superfund” cleanup program.

Clean Air Act

The Clean Air Act protects the general public from exposure to airborne contaminants that are known to be hazardous to human health. Under the Clean Air Act, the U.S. Environmental Protection Agency established National Emissions Standards for Hazardous Air Pollutants, which are emissions standards for air pollutants, including asbestos.

Clean Water Act

The Clean Water Act regulates discharges and spills of pollutants, including hazardous materials, to surface waters and groundwater.

Safe Drinking Water Act [42 U.S.C. Section 300(f) et seq.]

The Safe Drinking Water Act regulates discharges of pollutants to underground aquifers.

Toxic Substances Control Act [15 U.S.C. Section 2601 et seq.]

The Toxic Substances Control Act regulates manufacturing, inventory, and disposition of industrial chemicals including hazardous materials.

Federal Insecticide, Fungicide and Rodenticide Act [7 U.S.C. Section 136 and 40 C.F.R. Parts 152 to 171]

The Federal Insecticide, Fungicide and Rodenticide Act regulates the manufacturing, distribution, sale, and use of pesticides.

Hazardous Materials Transportation Act [49 U.S.C. Section 1801-1819 and 49 C.F.R. Parts 101, 106, 107, and 171-180]

The Hazardous Materials Transportation Act regulates the transport of hazardous materials by motor vehicles, marine vessels, and aircraft.

Emergency Planning and Community Right To Know Act [40 C.F.R. Parts 350 to 372]

The Emergency Planning and Community Right to Know Act regulates facilities that use hazardous materials in quantities that require reporting to emergency response officials.

Federal Compliance with Pollution Control [Executive Order 12088]

Executive Order 12088 requires federal agencies to take necessary actions to prevent, control, and abate environmental pollution from federal facilities and activities under control by federal agencies.

B. STATE

California Environmental Quality Act (CEQA) [Section 21000 et seq.] and CEQA Guidelines [Section 15000 et seq.]

CEQA requires state and local agencies to identify the significant environmental impacts of their actions, including potential significant impacts associates with hazardous wastes and materials, and to avoid or mitigate those impacts, when feasible.

Porter-Cologne Water Quality Act [California Water Code Section 13000 et seq.]

The Porter-Cologne Water Quality Act regulates water quality through the State Water Resources Control Board (SWRCB) and Regional Water Quality Control Boards (RWQCB), including oversight of water monitoring and contamination cleanup and abatement.

Hazardous Materials Release Response Plans and Inventory Law [California Health and Safety Code Section 25500 et seq.]

This section of the California Health and Safety Code requires facilities using hazardous materials to prepare Hazardous Materials Business Plans.

Hazardous Waste Control Act [California Health and Safety Code Section 25100 et seq.]

This act is similar to Resource Conservation and Recovery Act on the federal level in regulating the identification, generation, transportation, storage and disposal of materials deemed hazardous by the State of California.

Safe Drinking Water and Toxic Enforcement Act [Proposition 65]

The Safe Drinking Water and Toxic Enforcement Act is similar to the Safe Drinking Water Act and Clean Water Act on the federal level in regulating the discharge of contaminants to groundwater.

California Government Code Section 65962.5

This regulation requires the Department of Toxic Substances Control (DTSC) to compile and maintain lists of potentially contaminated sites located throughout the State of California (includes the Hazardous Waste and Substances Sites [Cortese] List).

3.10.2 Affected Environment

A. DEFINITION OF RESOURCE STUDY AREA (RSA)

Sources of Information	Resource Study Area
▪ Conceptual engineering plans and profiles ▪ Project description ▪ Borrow areas	▪ Alignment o Existing conditions and locations where right-of-way may need to be acquired o Laydown and/or staging areas o Proximity to hazardous materials sites of potential concerns ▪ Vertical construction profile o Potential areas requiring excavation, trenching, or other subsurface work that would require assessment of potential hazardous materials contamination ▪ Structures, roadways, borrow areas o Similar lateral and vertical considerations as rail alignment, assessing proximity to hazards and potential for hazardous materials contamination ▪ Borrow areas o Large potential sources of fill material that would require assessment of potential hazardous materials contamination

Information regarding historic development, historic land use, past use, storage, release, and disposal of hazardous materials, and government records of hazardous materials storage, use, release, disposal, and potential contamination will be obtained, at a minimum, using a records search through Environmental Data Resources, Inc. (EDR) or an equivalent source. The following information, at a minimum, will be procured and reviewed by each regional team for each section:

- Corridor-based search of government databases, using search distances listed in Section 8.2.1 of American Society for Testing and Materials (ASTM) Standard E1527-05, from the anticipated centerline of the High-Speed Train (HST) alignment, generally 0.5 to 1.0 mile from alignment centerline
- Current U.S. Geographic Survey (USGS) 7.5 Minute Topographic Maps or the equivalent
- Historic USGS Topographic Maps, preferably 7.5 minute maps
- Historic aerial photos via decade service (minimum one photo for each 10 year period) beginning with earliest readily available aerial photo, through aerial photos representing current development

Geology, Hydrogeology, Topography, Surface Water, Ground Water

Key Steps	Sources of Information
▪ Summarize regional geology, soils, and hydrogeology, with descriptions of how these conditions change across the study area. Focus on major changes that would affect hazards and hazardous materials. ▪ Describe historic and current topography and surface water bodies within RSA, in proximity to alignment and other project improvements. ▪ Describe representative groundwater conditions (such as depth, extent, water quality) within RSA.	▪ Regional and RSA geology, hydrogeology, soils: *Geology Study* ▪ Surface water bodies and groundwater: *Hydrology and Water Quality Study* ▪ Historic and current topographic maps

Historic and current state of development and use

Key Steps	Sources of Information
▪ Describe general type(s) of land use, from either the first developed use or 1940 (whichever is earlier) to the present use within the RSA. ▪ Discuss past and current uses of representative areas within the RSA, such as areas that are predominantly industrial, commercial, agricultural, residential, railroads, highway, etc. ▪ Identify readily identifiable hazardous materials associated with the past and current uses of the representative areas within the RSA. ▪ Briefly describe uses in the surrounding area, to the extent this information is revealed by current or historic documents in the course of researching.	▪ Historic and current aerial photographs, minimum of decade service from date of first readily available ▪ Historic and current topographic maps ▪ Current land use maps from General Plans within RSA ▪ Site Reconnaissance o Visual survey of current development and uses obtained by viewing RSA from publicly accessible locations. Entrance of private property and interior surveys of buildings, systems, and structures are not included.

Potential Environmental Concerns

For purposes of this study, Potential Environmental Concerns (PEC) are defined using the definition provided in the *Caltrans Initial Site Assessment Guidance Document* dated 2006, referencing back to ASTM Standard Practice E1528-06 (Transaction Screens):

> "the possible presence of any hazardous substances or petroleum products on a property under conditions that indicate the possibility of an existing release, a past release, or a threat of a release of any hazardous substances or petroleum products into structures on the property or into the ground, ground water, or surface water of the property. The term includes hazardous substances or petroleum products even under conditions in compliance with laws."

Key Steps	Sources of Information
▪ Identify of sites with Potential Environmental Concerns (PECs) within the RSA, include: o Site name o Address/location ▪ Summarize of conditions representing concern (database results, files findings, visual observations, etc). ▪ Summarize of current regulatory status of the PEC site. ▪ Describe current conditions related to routine transport, use, and disposal of hazardous materials within the RSA. ▪ Summarize of past upsets or accidents within the RSA, resulting in release of hazardous materials into the environment. ▪ Identify existing or proposed schools within one-quarter mile of the project area.	▪ Government database search results ▪ Review of readily available regulatory agency files and consultation with agency personnel as needed to determine current conditions and regulatory status ▪ Review of historic aerial photographs and topographic maps ▪ Site reconnaissance from publicly accessible areas, documented with photographs of observed PEC ▪ Federal Railroad Administration (FRA) Railroad Property Special Waste Screening Form ▪ Caltrans Transaction Screen Form, Appendix A of Caltrans Initial Site Assessment (ISA) Guidance Document, 2006 ▪ Department of Conservation's Division of Oil, Gas and Geothermal Resources lists of old and abandoned facilities. ▪ Observation or records of commercial vehicle traffic for indications of vehicles transporting hazardous materials (fuel trucks, supply trucks, rail tanker cars, etc) ▪ Accident records or statistics related to incidents of hazardous materials spills or releases within the project area, such as review of emergency response or fire department records or databases and California Highway Patrol (CHP) accident records ▪ Schools: locations and proximity; local school districts maps/websites or other sources as appropriate

3.10.3 Impact Analysis and Mitigation Strategies

A. METHODOLOGY FOR IMPACT ANALYSIS

The purpose of this methodology is to assess potential project-level hazards and hazardous materials impacts as defined by the significance criteria listed below. Specific to hazardous materials, this assessment would be accomplished by applying a screening-level assessment of Potential Environmental Concerns based on a government records database search and historical records review, regulatory agency files review, and site reconnaissance as described in Section 3.11.6, Subsequent Analysis, of the Program Statewide Program Environmental Impact Report/Environmental Impact Statement (EIR/EIS) and further defined below. This methodology also incorporates hazardous materials site screening protocols and forms from the FRA *CREATE Railroad Property Special Waste Procedures* (2006) and the California Department of Transportation *(Caltrans) Initial Site Assessment Guidance Document* (2006).

This methodology is not intended to be a parcel-level due diligence assessment for the purpose of property acquisition or transfer. While this methodology incorporates some of the investigation methods, it is not intended to represent or satisfy the requirements of a Phase I Environmental Site Assessment (ESA) as defined by ASTM Standard Practice E1527-05, nor is it intended to satisfy the

requirements of All Appropriate Inquiry (AAI) as defined in Title 40 CFR Part 312. This methodology does not include field sampling or analysis or investigation of individual buildings or structures. Detailed hazardous materials assessment of individual parcels potentially subject to property transfer or acquisition would occur after completion of the NEPA/CEQA environmental review process, as part of final design and project implementation.

Impacts related to hazardous materials and wastes are generally analyzed qualitatively, by considering the proximity of features such as PEC sites and operations such as routine and upset hazardous materials transport, use, and disposal, in relation to the project alternatives. The analysis considers how proximity and conditions of these features would potentially affect the construction and operation of project alternatives. The analysis is generally divided into two subject areas: potential impacts associated with hazardous materials (PEC) sites, and potential impacts associated with other hazards as described in the significance criteria. The impact analysis involves the evaluation of potential hazardous materials and wastes concerns in relation to the significance criteria, which are based on the CEQA Guidelines, Appendix G, Section VII, Hazards and Hazardous Materials. Impact analysis is qualitative, using terms such as “create a significant hazard”, “result in a safety hazard” and “impair implementation”. The proximity to schools, which are considered to be sensitive uses, must be considered in the impact assessment.

Consistent with the Program EIS/EIR mitigation strategies prepared for the Statewide High-Speed Train Program, this analysis assumes the commitment to use design practices to minimize impacts, and to use best practices and mitigation strategies to substantially lessen or avoid impacts associated with hazardous materials. Program-level mitigation strategies from the Program EIS/EIR include:

- Investigate soils for contamination and prepare ESAs when necessary.
- Prior to demolition of buildings for project construction, survey for lead-based paint and asbestos containing materials.
- Acquire necessary permits if ground dewatering is required.
- When indicated by project-level ESA’s, perform a Phase II ESA (e.g., hydrogeologic investigation) to identify specific mitigation measures. Perform Phase II ESA’s in conformance with the ASTM Standards Related to the Phase II Environmental Site Assessment Process (E1903-01).
- Prepare a Site Management Program/Contingency Plan (SMP/CP) prior to construction to address known and potential hazardous material issues SMP/CP including:
    - Measures to address management of contaminated soil and groundwater
    - Site-specific Health and Safety Plan (HASP) including measures to protect construction workers and general public
    - Procedures to protect workers and the general public in the event that unknown contamination or buried hazards are encountered
- Where appropriate, more detailed mitigation, or alternate methods more applicable to the proposed alignment, would be identified based on project-level analysis.

B. SIGNIFICANCE CRITERIA

Based on the State CEQA Guidelines, including Appendix G, a project would result in a significant impact if it would:

- Create a significant hazard to the public or the environment through the routine transport, use, or disposal of hazardous materials.
- Create a significant hazard to the public or the environment through reasonably foreseeable upset and accident conditions involving the release of hazardous materials into the environment.
- Emit hazardous emissions or handle hazardous or acutely hazardous materials, substances, or waste within one-quarter mile of an existing or proposed school.
- Be located on a site which is included on a list of hazardous materials sites compiled pursuant to Government Code Section 65962.5 and, as a result, would create a significant hazard to the public or the environment.

C. ENVIRONMENTAL CONSEQUENCES

For all impacts, determine significance of impacts based on the significance criteria listed above and whether impacts can be avoided by modification of project alternative or use of best practices. Review the approach to hazardous materials and wastes evaluation described in the Program EIR/EIS. Also the teams should review the hazardous materials and waste technical documents and environmental document sections for the Bay Area to Central Valley EIR/EIS.

Topic	Issues to Evaluate
Impacts associated with PEC sites	▪ Identify proximity of project alternatives to PEC sites. ▪ Identify potential impacts associated with PEC sites based on the following: o Anticipated construction methods (particularly methods with extensive subsurface construction such as trenching, tunneling, cuts) compared against PEC site conditions o Geology, hydrogeology, surface and ground waters in the vicinity of the alternative o Regulatory and response status of PEC sites ▪ Evaluate likelihood that construction or operation would encounter, cause, or worsen hazardous materials contamination.
Hazardous materials transport, use, disposal; routine operations and upsets/accidents	▪ Identify whether project alternatives would involve the generation, use, transport, or disposal of substantial new quantities of hazardous materials. ▪ Identify whether project alternatives would likely result in increased transportation of hazardous materials or relocation of hazardous materials transport such that it creates increased hazard to the public or the environment. ▪ Identify whether project alternatives would potentially increase the likelihood of upsets or accidents that would result in the release of hazardous materials. ▪ Conversely, identify whether the project alternatives would reduce the likelihood of upsets or accidents through features such as new grade separations.
Emissions or handling of hazardous materials near schools	▪ Identify proximity of project alternatives to nearby existing or proposed schools. ▪ Identify whether project alternatives would result in new emissions of hazardous materials or handling of hazardous or acutely hazardous materials within one-quarter mile of existing or proposed schools.

D. MITIGATION

The Section Environmental Teams will:

- Review mitigation strategies described in the CEQA Findings of Fact (November 2005) and the Record of Decision (November 18, 2005) for the Program EIR/EIS and develop project-level measures consistent with strategies to avoid or minimize impacts. Also the teams will review the hazardous materials and waste technical documents and environmental document sections for the Bay Area to Central Valley EIR/EIS.
- Identify mitigation measures for avoidance and minimization of impacts to be incorporated into project designs to reduce impacts.
- Develop a Mitigation Monitoring and Reporting Plan (MMRP) for both construction and operation of the HST project that addresses identification of hazardous materials and mitigation measures.

E. CUMULATIVE

See the *Caltrans Cumulative Impact Assessment Guidance*, which is applicable to non-highway projects: (http://www.dot.ca.gov/ser/cumulative_guidance/approach.htm). The following steps serve as guidelines for identifying and assessing cumulative impacts:

1. Determine if a cumulative impact analysis will be required for hazards and hazardous materials.
   - Prior to conducting the analysis of the project, coordinate with the Program Management Team and Section Environmental Team Cumulative Lead to determine whether hazards and hazardous materials will be considered in the cumulative impact analysis. This process is initiated during project scoping and continues throughout the NEPA/CEQA analysis. Assume cumulative impact analysis will be required for any impacts even if these impacts are small or are mitigated to a less than significant level. Only resources with no or beneficial impacts (before or after mitigation) will not be required to be included in the cumulative impact analysis.
2. Define the geographic boundary or Resource Study Area for each resource to be addressed in the cumulative impact analysis. This may result in more than one RSA per resource (e.g., for biology you may have more than one habitat or species RSA; for air quality you may have a CO impact with a small RSA or a basinwide RSA for other impacts). Do not make arbitrary decisions about the boundary of the RSA; you should be able to explain why the boundary was chosen based on environmental characteristics.
   - Submit RSA(s) to the Section Environmental Team Cumulative Lead.
3. Determine method for cumulative impact analysis.
   - Coordinate with the Section Environmental Team Cumulative Lead on the method of analysis (project list and/or plan). In general a project list approach will be taken in conducting the cumulative impact analysis, however for some topics a plan or combined approach may be necessary (e.g., air, transportation, and land use).
4. Determine list of past, present, and reasonably foreseeable projects to include in the cumulative impact analysis (if using project list method) or appropriate plan(s) (if using plan method).
   - The Section Environmental Team Cumulative Lead will identify what projects or plans will be used in the analysis. If the analysis is to use a project list approach, the Section Environmental Team Cumulative Lead will provide the Resource Specialist with the database of information for those projects. In some cases the Section Environmental Team Cumulative Lead will coordinate with the Resource Specialists to determine what assumptions will be

made in the cumulative impact analysis to account for unknown impacts of future projects (such as for projects in the early planning stages or without a certified environmental document).

5. Describe the current health and the historical context of each resource. (http://www.dot.ca.gov/ser/cumulative_guidance/approach.htm)
6. Identify cumulative impacts.
   - Identify if there is a significant cumulative impact without the project.
   - Identify the direct and indirect impacts of the proposed HST project that might contribute to a cumulative impact on the identified resources (this is information that should come from the impact analysis of the proposed HST project). The Resource Specialist will determine if the project contributes to an existing significant cumulative impact or result in a new cumulative impact when the project's impacts are added to the previously less than significant impacts of the other projects (i.e., one that tips the scales from less than significant to significant cumulative impact).
   - Based on the list of past, present, and reasonably foreseeable projects and the impacts of those projects and the direct and indirect impacts described above for the proposed HST project, or on analysis of the project in relation to existing plans, assess the potential cumulative impacts and state whether the project's contribution to a cumulative impact is "cumulatively considerable" as defined in Guidelines 15065(a)(3).
7. Identify mitigation for significant cumulative impacts. Coordinate with the Section Environmental Team Cumulative Lead (http://www.dot.ca.gov/ser/cumulative_guidance/approach.htm)
8. Document Results.
   - Summarize the results of the cumulative impact analysis for hazards and hazardous materials. This summary should include the identification of resources considered in the analysis, the RSA(s) for each resource, the conclusions concerning the health and historical context of understanding the resource; the proposed project impacts that might contribute to a cumulative impact, and the conclusions of the analysis. The Section Environmental Team Cumulative Lead will describe the other reasonably foreseeable actions considered in the cumulative impact analysis as part of the Cumulative Impacts section of the EIR/EIS.

3.10.4 Products

Reports should be based on relevant aspects of the hazardous materials site screening protocols and forms from the FRA *CREATE Railroad Property Special Waste Procedures* (2006) and the *Caltrans Initial Site Assessment Guidance Document* (2006).

A. TECHNICAL REPORT:
   1. Hazards and Hazardous Materials

B. PROJECT EIR/EIS
   1. Summary/Table for Executive Summary
   2. Section: Hazards and Hazardous Materials
   3. Section: Cumulative Impacts

3.11 Safety and Security

3.11.1 Laws, Regulations, and Orders

A. FEDERAL

Rail Safety Improvement Act of 2008 [P.L. 110 to 432]

The Rail Safety Improvement Act authorizes the Federal Railroad Administration (FRA) to oversee the nation's rail safety program between 2009 and 2013. The act aims to improve conditions of rail bridges and tunnels.

Federal Railroad Administration [49 C.F.R. Volume 4, Chapter 2, Part 200 to 299]

Code of Federal Regulations Title 49 Volume 4, Chapter 2, Parts 200-299 lists FRA regulations for railroad transportation safety standards, rules, and practices.

Federal Rail Safety Act [49 U.S.C. §20109]

The Federal Rail Safety Act protects the reporting of safety concerns and injuries, and prohibits railroads from disciplining, discharging, or retaliating in any form against employees who engage in protected activities. This act also prohibits the delay or interference of an injured employee's treatment.

Department of Homeland Security/Transportation Security Administration (TSA) [49 CFR Part 1580]

Part 1580, Rail Transportation Security, codifies TSA's inspection program. It also includes security requirements for freight railroad carriers; intercity, commuter, and short-haul passenger train service providers; rail transit systems; and rail operations at certain, fixed-site facilities that ship or receive specified hazardous materials by rail.

TSA –Security Directives for Passenger Rail

Security Directives RAILPAX-04-01 and RAILPAX-04-02 require rail transportation operators to implement certain protective measures, to report potential threats and security concerns to TSA, and to designate a primary and alternate security coordinator.

Emergency Planning and Community Right-to-Know Act [42 CFR 116]

The objectives of the Emergency Planning and Community Right-to Know Act are to: (1) allow state and local planning for chemical emergencies, (2) provide for notification of emergency releases of chemicals, and (3) address communities' right-to-know about toxic and hazardous chemicals.

B. STATE

California Environmental Quality Act [Article 9, §15126.2(a)]

CEQA requires state and local agencies to identify the significant environmental impacts of their actions, including potential significant impacts of locating development in other areas susceptible to hazardous conditions (e.g. wildfire risk areas) as identified in authoritative hazard maps, risk assessments or in land use plans addressing such hazards areas.

California Public Utilities Code [Section 7710 to 7727]

The California Public Utilities Code Sections 7710-7727 cover railroad safety and emergency planning and response. Under this code, the Public Utilities Commission is required to adopt safety regulations, report sites on railroad lines that are deemed hazardous within California. The

Rail Accident Prevention and Response Fund was created to in an effort to financially support prevention regulations through fees paid by surface transporters of hazardous materials. In addition, the Railroad Accident Prevention and Immediate Deployment Force was created to provide immediate onside response in the event of a large-scale unauthorized release.

Emergency Services Act

The Emergency Services Act supports the state's responsibility to mitigate adverse effects of natural, manmade, or war-caused emergencies that threaten human life, property, and environmental resources of the state. The act aims to protect human health and safety and preserve lives and property of the people of the state. The Office of Emergency Services is provided under the act to prescribe powers and duties supportive of the act's goals. In addition, the act authorizes the establishment of local organizations to carry out the provisions through necessary and proper actions.

National Fire Protection Association Codes and Standards

The National Fire Protection Association develops, publishes, and disseminates more than 300 consensus codes and standards intended to minimize the possibility and effects of fire and other risks.

C. REGIONAL AND LOCAL REGULATORY FRAMEWORK

- Local fire and police jurisdictions
- General Plan Policies and Ordinances
    - Safety and security elements

3.11.2 Affected Environment

A. DEFINITION OF RESOURCE STUDY AREA (RSA)

Sources of Information	Resource Study Area
▪ Conceptual engineering plans and profiles ▪ Project description ▪ Safety and Security plans and analysis developed by Program Management Team (PMT) ▪ Security Plans developed during preliminary and final engineering by Program Management Team in conjunction with local law enforcement	▪ Areas within the right-of-way and immediately adjacent to the right-of-way ▪ Station grounds and platforms ▪ Tunnels ▪ Half-mile radius around stations

Pedestrian Safety

Key Steps	Sources of Information
▪ Identify existing pedestrian traffic conditions around proposed stations and facilities, including problems, patterns, and accessibility concerns (cross-reference *Traffic, Transit, Circulation, Parking, and Freight Rail Report*) ▪ Identify if pedestrian accidents are a concern in the RSA and determine factors contributing to pedestrian accidents ▪ Identify present and future local pedestrian safety initiatives within RSA ▪ Identify existing and proposed Americans with Disabilities Act (ADA) conditions around proposed stations and facilities, including problems, patterns, and accessibility concerns	▪ Interviews with local jurisdiction planning agencies ▪ California State Office of Traffic Safety ▪ Local schools and area school districts including safe routes to schools, plans, and policies ▪ Local and regional pedestrian and disability advocacy groups ▪ Crash analysis and crash statistics from the *Traffic, Transit, Circulation, Parking, and Freight Rail Report*

Cyclist Safety

Key Steps	Sources of Information
▪ Identify existing bicycle traffic conditions around proposed stations and facilities, including problems, patterns, and accessibility concerns. Identify designated bike routes and lanes in area surrounding station locations (cross-reference *Traffic, Transit, Circulation, Parking, and Freight Rail Report*). ▪ Identify if cyclist accidents are a concern in the RSA and determine factors contributing to cyclist accidents. ▪ Identify present and future local cyclist safety initiatives within the RSA.	▪ Interviews with local jurisdiction planning agencies ▪ California State Office of Traffic Safety ▪ Local schools and area school districts ▪ Local and regional cycling advocacy and commuter groups ▪ Preliminary hazard analysis and accident statistics from the preliminary and final design phase from *Traffic, Transit, Circulation, Parking, and Freight Rail Report*

Highway Vehicular Safety

Key Steps	Sources of Information
▪ Identify existing vehicular traffic conditions around proposed stations and facilities, including congestion, accident patterns, and station accessibility concerns (cross-reference *Traffic, Transit, Circulation, Parking, and Freight Rail Report*). ▪ Identify if vehicular accidents are a concern in the RSA and determine common factors contributing to vehicular accidents. ▪ Describe traffic accident and congestion statistics within the cities in the RSA.	▪ Interviews with local jurisdiction planning agencies ▪ California Highway Patrol (CHP) Statewide Integrated Traffic Records System

Train Passenger/Employee Safety

Key Steps	Sources of Information
▪ Identify major passenger safety issues in rail cars and known safety hazards. ▪ Identify major system safety risks. ▪ Identify emergency equipment access provisions (i.e. fire truck access) and any special emergency equipment needs. ▪ Identify any issues with the construction of the Rail Vehicle.	▪ Accident statistics reports and rail car maintenance reports ▪ System Safety Program Plan (SSPP) developed during the final design and construction phases ▪ Safety and Security Certification Program (SSCP) developed during preliminary engineering and updated throughout the project phases as necessary ▪ Preliminary Hazard Analysis (PHA) to be developed during the preliminary engineering phase of the project ▪ Threat and Vulnerability Assessment (TVA) to be developed during the preliminary engineering phase of the project ▪ Rail Vehicle PHA developed during the preliminary phase ▪ Collision Hazard Analysis developed during the preliminary and final engineering phase of the project ▪ Interviews of local fire, police jurisdictions, hospitals, and other emergency service providers

Platform/Station Safety

Key Steps	Sources of Information
▪ Identify any platform or station safety issues, including accident or injury risks and identified safety hazards. ▪ Identify criminal behavior risks at station locations and parking facilities. ▪ Identify emergency equipment access provisions (i.e. fire truck access) and any special emergency equipment needs.	▪ System Safety Program Plan (SSPP) developed during the final design and construction phases ▪ Preliminary Hazard Analysis (PHA) to be developed during the preliminary engineering phase of the project ▪ Safety and Security Certification Program (SSCP) developed during preliminary engineering and updated throughout the project phases as necessary ▪ Crime statistics for surrounding area (National Uniform Crime Reporting Program) ▪ Interviews of local fire, police jurisdictions, hospitals, and other emergency service providers

Airports

Key Steps	Sources of Information
▪ Identify public airports, public use airports, and private airstrips within the RSA and the project vicinity. ▪ Identify major passenger safety issues in airport (including flight and landing paths, and control tower and terminals, and hangar buildings) and known safety hazards. ▪ Identify major system safety risks. ▪ Identify emergency equipment access provisions (i.e. fire truck access) and any special emergency equipment needs. ▪ Identify any issues with the construction of the HST.	▪ Airport Master Plans ▪ Accident statistics reports and maintenance reports for airports ▪ System Safety Program Plan (SSPP) developed during the final design and construction phases ▪ Safety and Security Certification Program (SSCP) developed during preliminary engineering and updated throughout the project phases as necessary ▪ Preliminary Hazard Analysis (PHA) to be developed during the preliminary engineering phase of the project ▪ Threat and Vulnerability Assessment (TVA) to be developed during the preliminary engineering phase of the project ▪ Rail Vehicle PHA developed during the preliminary phase ▪ Collision Hazard Analysis developed during the preliminary and final engineering phase of the project ▪ Interviews of local fire, police jurisdictions, hospitals, and other emergency service providers

Emergency Services

Key Steps	Sources of Information
▪ Identify location and service area of fire and police emergency services. ▪ Identify location of hospitals and other emergency service providers. ▪ Identify emergency equipment access provisions (i.e. fire truck access) and any special emergency equipment needs. ▪ Discuss emergency and safety plans and local policies regarding ambulance, fire, police, and rescue services dispatching procedures and ideal response times.	▪ Interviews of local fire, police jurisdictions, hospitals, and other emergency service providers ▪ Security Plans developed during preliminary and final engineering by Program Management Team in conjunction with local law enforcement ▪ Local transit providers emergency and safety plans

Wildland Fires

Key Steps	Sources of Information
▪ Identify location of wildlands within the regional setting. ▪ Discuss the history of or potential for wildland fires within the RSA.	▪ Wildlands and fire records/potential ▪ Biological Resources and Wetlands Report ▪ Consultation with Fire departments ▪ California Department of Forestry and Fire Protection (CalFire) records

Security

Key Steps	Sources of Information
▪ General description of security and law enforcement services in areas planned for high-speed train (HST) service, stations, parking areas, and facilities ▪ Identify and describe emergency lockdown and/or evacuation and emergency communication plans ▪ Airports and private airstrips within 2 miles of the project area o Summary of adopted airport land use plans, with focus on potential hazards to people residing or working within the project area o Identification and summary of emergency response plans and emergency evacuation plans within the project area ▪ Identify likely high concentrations of population and/or important federal and state centers in the project area ▪ High-risk facilities (e.g. refineries, chemical plants) within 2 miles of the project footprint ▪ Access points to Right-of-Way HST infrastructure and equipment, particularly in remote areas ▪ Crime statistics in areas planned for HST service corridors, corridors, stations and facilities ▪ High profile terrorist targets and critical infrastructure adjacent to HST service corridors, stations and facilities ▪ Existing criminal laws that would pertain to criminal acts on HST property (i.e. trespass, criminal mischief/vandalism, sabotage, etc.)	▪ Interviews with county and local law enforcement services o This may include services already provided at stations where the HST will coexist with other transit agencies ▪ System Safety Program Plan (SSPP) developed during the final design and construction phases ▪ Threat and Vulnerability Assessment (TVA) to be developed during the preliminary engineering phase of the project ▪ Safety and Security Certification Program (SSCP) to be developed during the preliminary engineering phase of the project ▪ FBI Data Base ▪ Department of Homeland Security preparedness information ▪ Local transit providers emergency and safety plans o Airport and airstrip locations: maps of project area o Airport Land Use Plans: airport operators or authorities; municipal airport or aviation departments o Emergency plans: fire departments; county or municipal emergency planning departments

3.11.3 Impact Analysis and Mitigation Strategies

A. METHODOLOGY FOR IMPACT ANALYSIS

Seismic safety is discussed in the *Geology, Soils, and Seismicity Report*. For safety issues related to hazardous materials, see the *Hazardous Materials and Waste Report*.

Safety relates to protection from accidents, including protection of people and property. For this analysis, it includes:

- the safety of passengers and employees on board HST vehicles, on HST platforms, and in stations
- the safety of HST workers, both those operating vehicles and those maintaining the vehicles and HST Right-of-Way
- the safety of motorists, pedestrians and cyclists in locations or access points where they would or could cross HST Right-of-Way, enter HST stations, or encounter other HST facilities

Security relates to protection from intentional acts, including protection of people and property from such deliberate acts and the foreseeable effects of these acts. Topics include crime prevention, emergency response, law enforcement, and protection against terrorism.

Many safety and security elements would be designed into the HST project to protect people and property against accidental or intentional injury and to comply with safety regulations. In several ways, the safety of the motorists at HST crossings would be ensured through the project design (i.e., HST grade-separation from automobile traffic). In some areas, the HST would be located in an exclusive Right-of-Way, eliminating potential conflict with trains or other vehicles. Other street improvements included in the project may improve vehicular safety, including street widening, intersection improvements, traffic restrictions, and/or new traffic signals. Some elements of the HST project may also improve pedestrian and cyclist safety. New traffic lights may be introduced at intersections, including traffic lights used by pedestrians. In other locations, widened sidewalks may also improve pedestrian safety.

Potential impacts should be evaluated by comparing similar systems including other HST systems (where information is available), intercity rail (Amtrak), commuter rail, heavy rail (Metro Red Line, BART), and light rail. In addition, previous studies and reports related to public transit safety and security issues should be reviewed.

The Program Management Team will:

- Develop a System Safety Program plan (SSPP) during the final design and construction phases in accordance with American Public Transportation Association (APTA) guidelines that addresses safety, security, and emergency response as it relates to the day-to-day operation of the system
- Develop a Threat and Vulnerability Assessment (TVA) for security and a Preliminary Hazard Analysis (PHA) for safety during the preliminary engineering phase to produce comprehensive design criteria for safety and security requirements mandated by local, state or federal regulations and industry best practices
- Develop a Fire Life Safety Program and a System Security Plan. Under guidelines and criteria set forth in the Federal Rail Safety Act, The Fire Life Safety Plan would address the safety of passengers and employees as it relates to emergency response. The System Security Plan would address design features of the project intended to maintain security at stations, within the trackwork right-of-way, and aboard trains. Compliance with these measures would maximize the safety and security of passengers and employees of the HST project so that adverse safety and security impacts would be less than significant.
- Coordinate with local agencies and local and regional transit providers (at intermodal stations) as well as provide guidance for considering their plans for safety, security and emergency response

B. SIGNIFICANCE CRITERIA

Based on State CEQA Guidelines, the project would have a significant impact if it would:

- Conflict with adopted policies, plans, or programs regarding public transit, bicycle, or pedestrian facilities, or otherwise decrease the safety of such facilities.
- Substantially increase hazards due to a design feature (e.g., sharp curves or dangerous intersections) or incompatible uses
- Result in a safety hazard for people residing or working in the project area (for a project located within an airport land use plan or, where such a plan has not been adopted, within two miles of a public airport or public use airport and/or within the vicinity of a private airstrip)
- Result in substantial adverse physical impacts associated with the provision of new or physically altered governmental facilities, need for new or physically altered governmental facilities, the construction of which could cause significant environmental impacts, in order to maintain acceptable service ratios, response times or other performance objectives for any of the public services, including fire protection, police protection, and emergency services
- Result in inadequate emergency access
- Impair implementation of or physically interfere with an adopted emergency response plan or emergency evacuation plan
- Expose people or structures to a significant risk of loss, injury or death involving wildland fires, including where wildlands are adjacent to urbanized areas or where residences are intermixed with wildlands

C. ENVIRONMENTAL CONSEQUENCES

Topic	Issues to Evaluate
Construction safety	▪ Exposure of workers and others to hazards not addressed in standard safety procedures ▪ Potential for dangerous crossings (conflict with vehicle or rail traffic resulting from project) or inadequate non-motorized connections ▪ Potential for temporary or permanent removal of established safety features
Operational safety	▪ Exposure of workers and passengers to hazards not addressed in standard safety procedures ▪ Potential for dangerous crossings or incidents (conflict between HST and highway vehicle or other rail traffic) or inadequate non-motorized connections
Motor vehicle, pedestrian and cyclist accidents	▪ Potential for dangerous conditions around the HST alignment, stations, and facilities that could lead to an increase in vehicle, pedestrian or cyclist accidents
Security	▪ Potential for threats and vulnerabilities related to terrorist acts ▪ Potential for criminal activities at or near stations and platforms ▪ Issues identified in the TVA
Emergency Response	▪ Emergency access and response to fires and threats ▪ Emergency right-of-way access by outside medical personnel

Topic	Issues to Evaluate
	▪ Increase in demand for emergency response that could result in a need for new or altered facilities in order to maintain acceptable service ratios, response times or other performance objectives for any of the public services, including fire protection, police protection, and emergency services.
Hazards associated within airports or airstrips	▪ Proximity of project alternatives to public airports, public use airports, and private airstrips ▪ Airports with airport land use plans: Review project alternatives design and operation characteristics against adopted airport land use plans to determine whether hazards would be created such as proximity and/or height of proposed facilities in relation to airport surfaces and airspace. Also consider characteristics such as lighting hazardous to aircraft operations and hazardous materials use by airports or in proximity to airports. ▪ Airports and airstrips without airport land use plans: Review project alternatives design and operation characteristics against Federal Aviation Administration (FAA) airport planning criteria and Caltrans Division of Aeronautics land use guidance to determine whether hazards would be created such as proximity and/or height of proposed facilities in relation to airport surfaces and airspace. Also consider characteristics such as lighting hazardous to aircraft operations and hazardous materials use by airports or in proximity to airports and airstrips. ▪ Potential safety hazard for people residing or working in the RSA where a project located within an airport land use plan or, where such a plan has not been adopted, within two miles of a public airport or public use airport ▪ Potential safety hazard for people residing or working in the RSA where a project is within the vicinity of a private airstrip
Wildland fire hazards	▪ Potential to increase in wildland fire hazards due to project alternative features such as power lines and facilities, or storage and maintenance facilities ▪ Exposure of potential hazard to people or structures from wildland fires due to changes in proximity, construction, and operations of project alternatives ▪ Exposure of people or structures to a significant risk of loss, injury, or death involving wildland fires, including where wildlands are adjacent to urbanized areas or where residences are intermixed with wildlands

D. MITIGATION

The Section and Program Management Environmental Teams will:

- Review mitigation strategies described in the CEQA Findings of Fact (November 2005) and the Record of Decision (November 18, 2005) for the Statewide Program (Program) Environmental Impact Report/Environmental Impact Statement (EIR/EIS) and develop specific project-level measures consistent with strategies that avoid or minimize impacts. Also the teams will review the safety and security technical documents and environmental document sections for the Bay Area to Central Valley High-Speed Train Program Environmental Impact Report/Environmental Impact Statement, May 2008.
- Suggest modifications to conceptual design of track Right-of-Way, stations, and parking facilities to avoid potential safety and security impacts

E. CUMULATIVE

See the *Caltrans Cumulative Impact Assessment Guidance*, which is applicable to non-highway projects: (http://www.dot.ca.gov/ser/cumulative_guidance/approach.htm). The following steps serve as guidelines for identifying and assessing cumulative impacts:

1. Determine if a cumulative impact analysis will be required for safety and security
   - Prior to conducting the analysis of the project, coordinate with the Program Management Team and Section Environmental Team Cumulative Lead to determine whether safety and security will be considered in the cumulative impact analysis. This process is initiated during project scoping and continues throughout the NEPA/CEQA analysis. Assume cumulative impact analysis will be required for any impacts even if these impacts are small or are mitigated to a less than significant level. Only resources with no or beneficial impacts (before or after mitigation) will not be required to be included in the cumulative impact analysis.
2. Define the geographic boundary or Resource Study Area for each resource to be addressed in the cumulative impact analysis. This may result in more than one RSA per resource (e.g., for biology you may have more than one habitat or species RSA; for air quality you may have a CO impact with a small RSA or a basinwide RSA for other impacts). Do not make arbitrary decisions about the boundary of the RSA; you should be able to explain why the boundary was chosen based on environmental characteristics.
   - Submit RSA(s) to the Section Environmental Team Cumulative Lead
3. Determine method for cumulative impact analysis
   - Coordinate with the Section Environmental Team Cumulative Lead on the method of analysis (project list and/or plan). In general a project list approach will be taken in conducting the cumulative impact analysis, however for some topics a plan or combined approach may be necessary (e.g., air, transportation, and land use).
4. Determine list of past, present, and reasonably foreseeable projects to include in the cumulative impact analysis (if using project list method) or appropriate plan(s) (if using plan method)
   - The Section Environmental Team Cumulative Lead will identify what projects or plans will be used in the analysis. If the analysis is to use a project list approach, the Section Environmental Team Cumulative Lead will provide the Resource Specialist with the database of information for those projects. In some cases the Section Environmental Team Cumulative Lead will coordinate with the Resource Specialists to determine what assumptions will be made in the cumulative impact analysis to account for unknown impacts of future projects (such as for projects in the early planning stages or without a certified environmental document).
5. Describe the current health and the historical context of each resource (http://www.dot.ca.gov/ser/cumulative_guidance/approach.htm)
6. Identify cumulative impacts
   - Identify if there is a significant cumulative impact under the no-project alternative
   - Identify the direct and indirect impacts of the proposed HST project that might contribute to a cumulative impact on the identified resources (this is information that should come from the impact analysis of the proposed HST project). The Resource Specialist will determine if the project contributes to an existing significant cumulative impact or result in a new cumulative impact when the project's impacts are added to the previously less than

significant impacts of the other projects (i.e., one that tips the scales from less than significant to significant cumulative impact).

- Based on the list of past, present, and reasonably foreseeable projects and the impacts of those projects and the direct and indirect impacts described above for the proposed HST project, or on analysis of the project in relation to existing plans, assess the potential cumulative impacts and state whether the project's contribution to a cumulative impact is "cumulatively considerable" as defined in Guidelines 15065(a)(3).

7. Identify mitigation for significant cumulative impacts. Coordinate with the Section Environmental Team Cumulative Lead (http://www.dot.ca.gov/ser/cumulative_guidance/approach.htm).
8. Document results
   - Summarize the results of the cumulative impact analysis for safety and security. This summary should include the identification of resources considered in the analysis, the RSA(s) for each resource, the conclusions concerning the health and historical context of understanding the resource; the proposed project impacts that might contribute to a cumulative impact, and the conclusions of the analysis. The Section Environmental Team Cumulative Lead will describe the other reasonably foreseeable actions considered in the cumulative impact analysis as part of the Cumulative Impacts section of the EIR/EIS.

3.11.4 Products

A. PROJECT EIR/EIS

1. Summary/Table for EIR/EIS Executive Summary
2. Section: Safety and Security
3. Section: Cumulative Impacts

3.12 Socioeconomics, Communities, and Environmental Justice

3.12.1 Laws, Regulations, and Orders

Key regulations for socioeconomics, communities, and environmental justice that are most relevant to the proposed project are summarized below.

A. FEDERAL

Title VI of the Civil Rights Act [42 U.S.C. Section 2000(d) et seq.]

Title VI of the Civil Rights Act prohibits discrimination on the basis of race, color, national origin, age, sex, or disability in programs and activities receiving federal financial assistance.

Executive Order 12898

The Executive Order 12898, known as the federal environmental justice policy, requires federal agencies to address to the greatest extent practicable and permitted by law the disproportionately high adverse human health and environmental effects of their programs, policies, and activities, on minority and low income populations in the United States. Federal agency responsibilities under this EO also apply to Native American programs. Department of Transportation (DOT) Order 5610.2 on environmental justice defines “disproportionately high and adverse effect on minority and low-income populations” to mean an adverse effect that is predominately borne by a minority population and/or a low-income population or that would be suffered by the minority population and/or low-income population and that is appreciably more severe or greater in magnitude than the adverse effect that would be suffered by the nonminority population and/or non-low-income population (Department of Transportation Order 5610.2, Appendix Definitions, sub.[g]).

Executive Order 13166

The Executive Order 13166 requires each federal agency to ensure that recipients of federal financial assistance provide meaningful access to their programs and activities by Limited English Proficiency (LEP) applicants and beneficiaries.

Americans with Disabilities Act [42 U.S.C. Sections 12101 to 12213]

The Americans with Disabilities Act prohibits discrimination based on disability.

Uniform Relocation Assistance and Real Property Acquisition Policies Act [42 U.S.C. Chapter 61]

The purpose of the Relocation Assistance Program is to ensure that persons displaced as a result of a federal action or an undertaking involving federal funds, are treated fairly, consistently, and equitably so that such persons will not suffer disproportionate injuries as a result of projects designed for the benefit of the public as a whole.

B. STATE

California Environmental Quality Act (CEQA) [Section 21000 et seq.] and CEQA Guidelines [Section 15000 et seq.]

CEQA requires state and local agencies to identify the significant environmental impacts of their actions, including potential significant impacts on established communities, and to avoid or mitigate those impacts, when feasible.

Pursuant to CEQA Guidelines Section 15131(b), economic and social effects of a project that are not related to physical changes in the environment are not treated as significant effects on the

environment, but may be used to determine the significance of physical changes caused by the project.

California Government Code Section 65040.12(e)

Government Code Section 65040.12(e) defines environmental justice as "the fair treatment of people of all races, cultures, and incomes with respect to the development, adoption, implementation, and enforcement of environmental laws, regulations, and policies".

California Relocation Act [Government Code Section 7260 et seq.]

In parallel with the federal law, the act requires state and local governments to provide relocation assistance and benefits to displaced persons due to projects undertaken by state and local which do not involve federal funds.

C. REGIONAL AND LOCAL REGULATORY FRAMEWORK

- General Plan Policies
- Population, Land Use, Infrastructure, Parks and Recreation, or Open Space elements
- Other Regional and Local Jurisdiction Policies
- Specific Plans, Redevelopment Plans, etc.
- Other Regional and Local Jurisdiction Ordinances and Codes
- Development and design standards, etc.

3.12.2 Affected Environment

A. DEFINITION OF RESOURCE STUDY AREA (RSA)

Required Engineering Information	Resource Study Area
▪ Project description ▪ Conceptual engineering plans and profiles ▪ Aerial maps ▪ GIS base if possible ▪ Right-of-way data showing potential parcel acquisitions for high-speed train (HST) alignments, accessory structures and related facilities, including cleaning, storage, parking, and maintenance areas	▪ RSAs vary depending on topic being analyzed, which should be informed by the scoping process, but should generally cover the following: o 1/2-mile radius around station locations or access points, and maintenance and other support facilities o 1/2-mile radius on either side of the alignment's right-of-way ▪ For socioeconomic issues, the RSA may also include: o Affected Traffic Analysis Zone (TAZ) or Census Tracts/Block Groups ▪ Include areas identified to have low income and/or minority populations o Buildings ▪ Residences, businesses, schools, government offices, and other buildings that would be made more or less accessible, or otherwise affected by the proposed project ▪ Include structures that may be subject to removal or relocation. o Transportation Facilities ▪ Streets, railroad lines, bikeways, and parking facilities that may be closed or otherwise affected ▪ Also consider pedestrian overcrossings and sidewalks o Neighborhood and Community Features ▪ Communities, neighborhoods, parks and recreation areas, and business centers that may be affected

B. Community Profile

Social Setting

Key Information	Sources
▪ Describe demographic characteristics o Existing and projected population and the relevant demographic characteristics of the RSA and the associated city, county, and region o Demographic characteristics include ethnic	▪ Federal Highway Administration guidance on environmental justice with specific definitions for low-income and minority populations: http://www.fhwa.dot.gov/environment/ej2000.htm ▪ Caltrans Environmental Handbook Volume 4: Community Impacts Assessment, Sections 3-4

Key Information	Sources
group, age, income, and low mobility status (elderly and/or disabled) ▪ Household Size and Composition o Existing number of households and average household size should be discussed in the context of how these have changed in recent years o Discuss the composition of households in terms of number of single heads of households, female heads of households, and families ▪ Ethnic Mix o Ethnic composition of the existing population, as well as recent trends or changes in ethnic composition should be identified ▪ Age Distribution o Discuss distribution of the population by general age groups ▪ Income o Identify median income of the RSA (compared to the city, county, and region) o List number of households with incomes below the officially-defined poverty level ▪ When using the 2000 Census data, low-income refers to a person whose median household income is at or below the Census poverty threshold (percentage of individuals identified in 2000 Census as below the poverty level) o Include a short discussion of poverty thresholds, addressing other thresholds, including the U.S. Department of Health and Human Services (HHS) poverty guidelines, State of California poverty guidelines, and if applicable, county poverty guidelines, definitions, or thresholds. ▪ Environmental Justice census tracts/block groups o Examine the census tracts/block groups within a 1/2-mile radius of the alignment, stations/access points, and maintenance and support facilities o If data does not allow for effective use of block groups, census tracts may be used ▪ Minority Populations o Populations where the minority population either exceeds 50 percent or the minority	http://www.dot.ca.gov/ser/envhand.htm ▪ Program EIR/EIS ▪ U.S. Census data ▪ U.S. Department of Commerce ▪ General and regional plans ▪ Field surveys, as appropriate ▪ Aerial and ground photography ▪ GIS Data ▪ Regional Transportation Plans socioeconomic forecasts ▪ U.S. Department of Housing and Urban Development (HUD) ▪ American Community Survey (ACS) ▪ California Employment Development Department ▪ California Department of Finance ▪ Regional Associations of Governments, and other sources available to provide most current regional and local data ▪ Local Planning and Redevelopment agencies, ▪ Public service providers ▪ Scoping comments ▪ Outreach efforts to low-income and minority populations, which should be detailed in the EJ Outreach Plan

Key Information	Sources
population percentage is meaningfully greater than the majority population percentage in the general population or other appropriate unit of geographic analysis o A minority population also exists if there is more than one minority group present and the minority percentage, as calculated by aggregating all minority persons, meets one of the above-stated thresholds o Census tracts/block groups are considered to have substantial minority populations if the percent of minority residents within them is either greater than 50 percent or is more than 10 percentage points higher than the County average *(Note:* When using 2000 Census, respondents that did not identify themselves as white in the racial identity question of the Census and persons who identified themselves as Hispanic or Latino are considered part of a minority population.) ▪ Low-Income Populations o Census tracts/block groups are considered low-income populations if the percent of low-income residents within them is either greater than 25 percent or is more than 10 percentage points higher than the County average ▪ Describe community/neighborhood characteristics and trends ▪ Describe population growth policies and trends ▪ Use maps, tables, and charts to help describe the setting	

Note about Census 2000 Data

When using 2000 Census data, the data must be validated with current information to ensure that no environmental justice (EJ) group or cluster is overlooked. Validation sources could include scoping comments, information from outreach to low-income and minority populations, public service providers (including schools), community groups, churches, local chambers of commerce, planning departments, redevelopment agencies, and similar agencies/organizations.

All 2000 Census data must be updated to the greatest extent possible. Other sources to update the 2000 Census information include the American Community Survey (ACS), which is part of the census and is updated annually for all counties; unemployment characteristics must be described and the data can be obtained from the California Employment Development Department; California Department of Finance that provides population and housing estimates for cities, counties, and the state; and regional Associations of Governments (SCAG, SANBAG, etc.).

All validating information must be documented.

Housing and Business Setting

Key Information	Sources
▪ Describe residential characteristics o This is of particular concern if there is the potential for displacements and the need for subsequent relocations o Characteristics include types of housing in RSA and associated City or County, including single family, multifamily, apartments, mobile homes, owner occupied/rented, sizes, range of prices, and general age ▪ Discuss projections and trends of housing stock ▪ Describe local housing policies and programs ▪ Describe business characteristics if they are likely to be affected by the project, including number, general size, types of businesses ▪ Use maps and tables to help describe the setting. ▪ Describe public services/facilities including schools, parks and recreation, trails and bikeways, religious institutions, hospitals, police and fire protection, hospitals, etc. ▪ Describe circulation and access within the RSA	▪ Caltrans Environmental Handbook Volume 4: Community Impacts Assessment; Section 4-5 http://www.dot.ca.gov/ser/envhand.htm ▪ Program EIR/EIS ▪ U.S. Department of Commerce ▪ General and Regional Plans ▪ Field surveys, as appropriate ▪ Local realtors; electronic real estate services (e.g., DataQuick) ▪ U.S. Census Data ▪ Aerial and ground photography ▪ GIS Data ▪ California Housing and Community Development ▪ Local Planning and Redevelopment agencies ▪ Scoping comments ▪ Outreach efforts which should be defined in the Public Involvement Plans

Economic Setting

Key Information	Sources
▪ Describe population and employment in the region, County, local jurisdictions, and RSA for the baseline year and projected year ▪ Describe employment by industry in the region, County, and local jurisdictions ▪ Describe employment and unemployment for the local jurisdictions located in the RSA, as well as the state and county ▪ Describe revenue generated from property tax and sales tax for the local jurisdictions located in the RSA, as well as the County ▪ Use maps and tables to help describe the setting	▪ Caltrans Environmental Handbook Volume 4: Community Impacts Assessment, Section 3-6 http://www.dot.ca.gov/ser/envhand.htm ▪ Program EIR/EIS ▪ California Employment Development Department ▪ California State Board of Equalization ▪ U.S. Census data ▪ General and regional plans ▪ Aerial and ground photography ▪ GIS Data ▪ Planning and Redevelopment agencies ▪ Outreach efforts which should be defined in the Public Involvement Plans

3.12.3 Impact Analysis, Evaluation Criteria and Mitigation Strategies

A. METHODOLOGY FOR IMPACT ANALYSIS

This methodology is generally based on *the Caltrans Environmental Handbook Volume 4: Community Impacts Assessment*. For the impact analysis methods also see Sections 4-6, 4-7, and 4-8 in the Caltrans guidance (http://www.dot.ca.gov/ser/envhand.htm). The impact analyses should be conducted, based upon the existing data gathered, as noted above. Both construction-related and operational impacts need to be discussed, as well as direct impacts and indirect impacts. The EJ analysis is also generally based on Caltrans guidance. (http://www.dot.ca.gov/ser/vol1/sec3/community/ch25ej/chap25ej.htm)

Social Impacts

Identify and discuss the direct and indirect impacts of the proposed project, including:

- Changes in neighborhoods or community cohesion for various social groups as a result of the proposed project, including displacements of residents and/or businesses, as well as past actions and reasonably foreseeable future actions
- Effects on community setting, character, physical boundaries, and land uses
- Any physical or perceived barriers the project would create in neighborhoods, resulting in an isolated portion of a neighborhood or ethnic group, or separating residents from community facilities. Account for new connections created by the project including new grade-separated crossings of railroad lines
- Changes in access and parking for businesses, residences, and community facilities
- Impacts on school districts, recreation areas, religious institutions, businesses, and police and fire protection, including direct and indirect impacts resulting from displacement of households and businesses
- Effects on the density and distribution of people throughout the RSA, the location of employers in relationship to employees, and the characteristics of population groups in relation to opportunities for access to transportation options and systems
- Conflicts with existing and future non-motorized access and circulation as identified by the number and location of potential major conflicts with existing and future facilities (For instance, would the alternative prevent the continued use of an existing non-motorized transportation facility, by requiring the removal of an existing bicycle facility over a roadway or highway?)
- Impacts on recreational facilities regarding the amount of land to be used, facilities and functions affected, noise, visual, etc. (cross-reference other technical reports)
- Long-term impacts and short-term interruptions of use of the recreational resource
- Any project-related increase in the use of existing neighborhood and regional parks or other recreational facilities such that substantial physical deterioration of the facility would occur or be accelerated
- Where an alternative(s) uses land from more than one park or recreational resource, prepare a summary table comparing the park and recreation impacts of the alternatives. Those impacts that can be quantified should be quantified while others should be described (see also Section 4.0 Section 4[f] Methods).

Identify the construction impacts of the proposed project.

- Changes to access of businesses, residences, and community facilities

- Disruption of commercial, community, emergency services (e.g. police, fire protection, etc.), and other services during construction
- Disruption of businesses, residents, and community activities due to temporary construction easements
- Construction impacts upon community facilities

Property

The displacement and relocation methodology is generally based on the *Caltrans Right-of-Way Manual* for relocation impact documents. (http://www.dot.ca.gov/hq/row/rowman/manual/ch10.pdf)

- Identify residential and non-residential properties, or the portions thereof, that would need to be acquired using aerial photographs, conceptual engineering plans and profiles and right-of-way data showing potential parcel acquisitions (based on agreed upon corridor study width). Verify by conducting field surveys and tabulate the types of land uses (e.g., residential, commercial, and institutional) and numbers of units to be acquired. Use assessor parcel data and street addresses for this analysis. Suggest obtaining assessor parcel data in GIS for ease of calculation (and recalculation). Use a property data service to obtain specific property information (e.g., DataQuick or other vendor). Take photographs of potential acquisitions for future use in the analysis. Use the aerial photographs to identify and map the potential acquisitions.
- In general, potential full non-residential property acquisition should be evaluated if the project would physically intrude on existing buildings, or remove enough of a portion of available use of the site (such as parking) so that the business would be unable to operate. Full residential acquisition should be evaluated if the project facilities would physically interrupt existing residential structures, or take a substantial portion of the front yard or other important residential amenities (e.g., driveway or garage) that would affect the continued use of the property.
- Estimate the number of households to be displaced including information such as owner/tenant status, estimated value and rental rates of properties to be acquired, family characteristics, and special consideration of the impacts on minorities, the elderly, large families, and the handicapped when applicable
- Estimate resident displacements based on the number of units and a factor for persons per household based on the average for the U.S. Census block group (the smallest unit of information available) for the city (or county if in unincorporated area).
- Estimate the number, type, and size of the businesses, farms, and nonprofit organizations to be displaced and the approximate number of employees that may be affected (number of employees can be based on square footage for the respective land uses [i.e., retail, industrial, and office]).
- Identify residential and non-residential relocation resources within the study area (consider using the city as the relocation area). Sources of information include local Real Estate professionals, newspapers, or data services.
- Estimate the number of comparable replacement dwellings in the area (including price ranges and rental rates) that are expected to be available to fulfill the needs of those households displaced. Identify if an adequate supply of comparable housing will be available at the time of relocation.
- Estimate the availability of replacement business sites. Identify if an adequate supply of replacement business sites is expected to be available at the time of relocation; the impacts of displacing the businesses should be considered and addressed. Planning for displaced businesses which are reasonably expected to involve complex or lengthy moving processes or small businesses with limited financial resources and/or few alternative relocation sites should include an analysis of business moving problems.

Environmental Justice

- Identify temporary and permanent, direct and indirect adverse effects to minority and/or low-income populations from the HST project alternatives in the corridor section. Examples of potential topics: air, noise, water pollution, hazardous waste, aesthetic values, community cohesion, economic vitality, employment effects, displacements/relocations, farmland impacts, accessibility, traffic congestion, safety and construction impacts. Also consider potential effects associated with critical neighborhood amenities as appropriate (for example a removal of the only supermarket, community clinic or hospital, job training center, major employer, or similar amenity that is critical to a neighborhood) even if that amenity may be located outside the low-income and/or minority populations area that was identified by using census tracts/census blocks. See other sections/technical reports for information.

  Also identify any direct and indirect beneficial effects (e.g provision of employment, etc.) as applicable.
- Identify mitigation and enhancements measures and potential offsetting benefits to the affected communities from the HST alternatives as well as the design, comparative impacts, and the relevant number of similar existing system elements in non-minority and non-low-income areas.
- Summarize the effectiveness and feasibility of the mitigation measures to reduce impacts to a less than significant level.
- If the preferred alternative will cause disproportionately high and adverse impacts to the minority and/or low-income populations, identify additional avoidance alternatives and impact minimization strategies.
- Determine CEQA Level of Significance after Mitigation taking into account mitigation and enhancements measures and all offsetting benefits as well as the design, comparative impacts, and the relevant similar existing system elements in non-minority and non-low-income areas.

Economic and Fiscal

- Fiscal transactions potentially associated with the project that would result in direct revenue to a jurisdiction should be calculated. The majority of these funds are produced from taxable transactions (i.e., sales taxes) and property taxes. A smaller amount of revenue is generated by jurisdictions through business fees, fuel taxes, licenses, fees, and fines. These lesser taxes are not included in the analysis because they cannot be precisely estimated and represent a very small portion of total revenue. For property tax, calculate revenues lost from full property acquisitions. For sales tax calculations, only those businesses that collect sales tax for products, goods, or services should be included in the analysis.
  - Identify the level of long-term/permanent employment generated by the project and short-term/temporary employment generated by project construction. Address construction employment in relation to current unemployment levels.

B. SIGNIFICANCE CRITERIA

Based on State CEQA Guidelines, the project would have a significant impact if it would:

- Physically divide an established community
- Displace substantial numbers of existing housing, necessitating the construction of replacement housing elsewhere
- Displace substantial numbers of people, necessitating the construction of replacement housing elsewhere

- Result in substantial adverse physical impacts associated with the provision of new or physically altered governmental facilities, need for new or physically altered governmental facilities, the construction of which could cause significant environmental impacts, in order to maintain acceptable service ratios, response times or other performance objectives for any of the public services, including fire protection, police protection, schools, parks, other public facilities

  For criteria of significance for indirect impacts to community facilities, such as visual quality and aesthetics and noise/vibration, see those sections; for treatment of 4(f) and 6(f) resources see that section.

In evaluating potential impacts consider the following:

Social

- Conflict with established recreational, educational, religious, or scientific uses of the area
- Adverse changes in the character and cohesion of an established neighborhood, such as increased noise, traffic, access restrictions, parking loss or intrusion, or pedestrian safety hazards, so that the integrity of the neighborhood as a whole is changed (but not necessarily individual properties)
- Disrupt or adversely affect a property of cultural significance to a community or ethnic or social group
- Displace substantial numbers of residents and/or businesses
- Disrupt or divide the physical arrangement of an established community, or remove major/ critical neighborhood amenities
- An social impact resulting in a physical impact

Public Services and Facilities

- Acquisition of a recreational resource that would result in a diminished capacity to use the resource for specific and defined recreational activities. The acquisition of a portion of a recreational facility that is oriented toward passive use would not constitute a significant impact, unless the passive nature of the resource is the primary reason that the resource is valued and the amount being acquired would substantially diminish that value. In such a case, a significant impact would occur.

Property

- Displacement of existing housing where adequate, comparable, or better (when applicable) replacement housing is not available within the vicinity
- Displacement of businesses or employees without adequate replacement within the same or similar market, thereby causing deterioration of the physical environment either directly or indirectly
- Temporary or permanent disruption of local businesses that results in the loss of those businesses resulting in direct or indirect physical deterioration of the environment

Environmental Justice

  - Is the impact predominantly borne by a minority and/or low-income population?
  - Will it be suffered by the minority and/or low income population and is appreciably more severe or in greater magnitude than the adverse effect that will be suffered by non-minority and/or non-low income population. Typically, impacts that may be disproportionate are

relocations whereby their type and/or number is such that they substantially change the cohesion of a minority and/or low income neighborhood/community, and temporary/partial takings for construction easements that substantially change the cohesion of these neighborhoods/communities. In some instances, relocation of critical neighborhood amenities (ex. removal of an only supermarket, community clinic or hospital, or similar amenity that is critical to serving a neighborhood, etc.) may also result in such impact.

Economic

- Direct or indirect elimination of employment, thereby causing physical deterioration of the environment either directly or indirectly
- Result in loss of local tax revenue that would reduce government spending on or provision of local community and social services, thereby indirectly causing physical deterioration of the environment
- Also address beneficial effects such as provision of employment, and/or gain in local tax revenues, etc.

Where the analysis uses economic effects to determine that a physical effect is significant, explain the reason for determining the effect is significant. [CEQA Guidelines 15131]

C. MITIGATION

The Section Environmental Teams will:

- Review mitigation strategies described in the CEQA Findings of Fact (November 2005) and the Record of Decision (November 18, 2005) for the Statewide Program (Program) Environmental Impact Report/Environmental Impact Statement (EIR/EIS), and the Bay Area to Central Valley Program EIR Findings of Fact, July 9, 2008, and when available, the related Record of Decision, and develop project-level measures consistent with strategies to avoid or minimize harm from air quality impacts, noise impacts, visual and aesthetic impacts and others where applicable. Assess need for additional mitigation, including design variations.
- Consider and integrate input from the affected communities of concern and community leaders
- Describe requirements of the Uniform Relocation and Assistance Program (include as an appendix). This is not considered mitigation, but a requirement

D. CUMULATIVE

See the *Caltrans Cumulative Impact Assessment Guidance*, which is applicable to non-highway projects: (http://www.dot.ca.gov/ser/cumulative_guidance/approach.htm). The following steps serve as guidelines for identifying and assessing cumulative impacts:

1. Determine if a cumulative impact analysis will be required for community impacts
   - Prior to conducting the analysis of the project, coordinate with the Program Management Team and Section Environmental Team Cumulative Lead to determine whether community impacts will be considered in the cumulative impact analysis. This process is initiated during project scoping and continues throughout the NEPA/CEQA analysis. Assume cumulative impact analysis will be required for any impacts even if these impacts are small or are mitigated to a less than significant level. Only resources with no or beneficial impacts (before or after mitigation) will not be required to be included in the cumulative impact analysis.

2. Define the geographic boundary or Resource Study Area for each resource to be addressed in the cumulative impact analysis. This may result in more than one RSA per resource (e.g., for biology you may have more than one habitat or species RSA; for air quality you may have a CO impact with a small RSA or a basin wide RSA for other impacts). Do not make arbitrary decisions about the boundary of the RSA; you should be able to explain why the boundary was chosen based on environmental characteristics.
   - Submit RSA(s) to the Section Environmental Team Cumulative Lead
3. Determine method for cumulative impact analysis
   - Coordinate with the Section Environmental Team Cumulative Lead on the method of analysis (project list and/or plan). In general a project list approach will be taken in conducting the cumulative impact analysis, however for some topics a plan or combined approach may be necessary (e.g., air, transportation, and land use).
4. Determine list of past, present, and reasonably foreseeable projects to include in the cumulative impact analysis (if using project list method), appropriate plan(s) (if using plan method), or major projects and appropriate plans if using combined list and plan method
   - The Section Environmental Team Cumulative Lead will identify what projects and/or plans will be used in the analysis. If the analysis is to use a project list approach, the Section Environmental Team Cumulative Lead will provide the Resource Specialist with the database of information for those projects. In some cases the Section Environmental Team Cumulative Lead will coordinate with the Resource Specialists to determine what assumptions will be made in the cumulative impact analysis to account for unknown impacts of future projects (such as for projects in the early planning stages or without a certified environmental document). The analysis may use a combined list and plan approach, with planning departments in all affected local jurisdictions, plus service providers and Caltrans to be contacted for information/verification.
5. Describe the current health and the historical context of each resource (http://www.dot.ca.gov/ser/cumulative_guidance/approach.htm)
6. Identify cumulative impacts
   - Identify if there is a significant cumulative impact without the project
   - Identify the direct and indirect impacts of the proposed HST project that might contribute to a cumulative impact on the identified resources (this is information that should come from the impact analysis of the proposed HST project). The Resource Specialist will determine if the project contributes to an existing significant cumulative impact or result in a new cumulative impact when the project's impacts are added to the previously less than significant impacts of the other projects (i.e., one that tips the scales from less than significant to significant cumulative impact).
   - Based on the list of past, present, and reasonably foreseeable projects and the impacts of those projects and the direct and indirect impacts described above for the proposed HST project, or on analysis of the project in relation to existing plans, assess the potential cumulative impacts and state whether the project's contribution to a cumulative impact is "cumulatively considerable" as defined in Guidelines 15065(a)(3)
7. Identify mitigation for significant cumulative impacts. Coordinate with the Section Environmental Team Cumulative Lead (http://www.dot.ca.gov/ser/cumulative_guidance/approach.htm).
8. Document results

- Summarize the results of the cumulative impact analysis for community impacts. This summary should include the identification of resources considered in the analysis, the RSA(s) for each resource, the conclusions concerning the health and historical context of understanding the resource; the proposed project impacts that might contribute to a cumulative impact, and the conclusions of the analysis. The Section Environmental Team Cumulative Lead will describe the other reasonably foreseeable actions considered in the cumulative impact analysis as part of the Cumulative Impacts section of the EIR/EIS.

3.12.4 Products

A. TECHNICAL REPORT

1. Community Impact Assessment Report

The *Community Impact Assessment Report* (CIA) will generally follow the guidance provided in *Caltrans Standard Environmental Reference Volume 4*. The CIA will describe the relevant existing conditions, the potential impacts of the project on the community and its neighborhoods, the significance of the identified impacts, and potential mitigation measures to best avoid significant adverse impacts resulting from the project. The CIA will also describe the public involvement activities, focusing on how the communities are outreached to and how the public input is considered, including outreach to EJ communities, i.e. outreach activities that have been accomplished to date and future planned outreach activities; the EJ Outreach Plan will be described and referenced. The CIA will include assessment of social impacts, economic impacts, relocation impacts, public service and facility impacts, and non-motorized transportation impacts. Land use data will be described in the land use technical report (or EIR/EIS).

B. PROJECT EIR/EIS

1. Summary for EIR/EIS Executive Summary
2. Section: Socioeconomics, Communities, and Environmental Justice
3. Section: Cumulative Impacts

3.13 Station Planning, Land Use, and Development

3.13.1 Laws, Regulations, and Orders

Key regulations for local growth, station planning, and land use that are most relevant to the proposed project are summarized below.

A. FEDERAL

National Environmental Policy Act (NEPA) [42 U.S.C. Section 4321 et seq.]

NEPA requires the consideration of potential environmental effects, including potential local growth, station planning, and land use effects, in the evaluation of any proposed Federal agency action. NEPA also obligates federal agencies to consider the environmental consequences and costs in their projects and programs as part of the planning process. General NEPA procedures are set forth in the Council on Environmental Quality (CEQ) regulations 23 CFR 771.

Wilderness Act [16 U.S.C. Sections 1131 to 1136] ***(as applicable to a given section)***

The Wilderness Act preserves and protects wilderness areas in their natural condition for use and enjoyment by present and future generations. This law applies to all lands designated by Congress as part of the wilderness system and provides criteria for determining suitability and establishes restrictions on activities that can be undertaken in a designated area.

Farmland Protection Policy Act [7 U.S.C. Sections 4201 to 4209 and 7 C.F.R. Part 658] ***(as applicable to a given section)***

The Act requires that before taking or approving any federal action that would result in conversion of farmland, the agency must examine the effects of the action using the criteria set forth in the Act, and, if there are adverse effects, must consider the following alternatives to lessen them: (1) early coordination with the NRCS; (2) land evaluation and site assessment; and (3) determination of whether to proceed with farmland conversion, based on severity of impacts and other environmental considerations.

Coastal Zone Management Act [16 U.S.C. 1451 to1464; 15 CFR Parts 923, 930] ***(as applicable to a given section)***

The Coastal Zone Management Act applies to all projects significantly affecting areas under the control of the State Coastal Zone Management Agency (CZMA). Before federal approval is granted, a consistency determination with the approved Coastal Zone Management Plan (CZMP) from the State would be required.

Wild and Scenic Rivers Act [16 U.S.C. Sections 1271 to 1287] ***(as applicable to a given section)***

This Act preserves certain rivers with outstanding natural, cultural, and recreational values in a free-flowing condition for the enjoyment of present and future generations.

Federal Land Policy and Management Act [43 U.S.C. Sections 1701 to 1782] ***(as applicable to a given section)***

This Act directs how the Bureau of Land Management (BLM) manages public lands. The BLM set forth guidelines for public land use planning and management which includes preservation and protection of certain lands in their natural condition where appropriate.

B. STATE

California Environmental Quality Act (CEQA) [Section 21000 et seq.] and CEQA Guidelines [Section 15000 et seq.]

CEQA requires state and local agencies to identify the significant environmental impacts of their actions, including potential significant local growth, station planning, and land use impacts, and to avoid or mitigate those impacts, when feasible.

California Land Conservation Act [California Government Code Sections 51200 to 51295]

The California Land Conservation Act provides incentives, through reduced property taxes, to deter the early conversion of agricultural and open-space lands.

California Coastal Act [California Public Resources Code Sections 30000 to 39000] ***(as applicable for a given section)***

The California CoastalAct defines coastal zone and establishes land development controls for the zone, including requirements for a coastal development permit.

California Coastal Commission implementing regulations [California Code of Regulations, Title 14, Division 5.5] ***(as applicable for a given section)***

The regulations define the permitting process including restrictions, appeals, and enforcement, as well as, permits issued by local governments and public agencies.

Senate Bill No. 375, Chapter 728

The SB 375 requires certain transportation planning projects to comply with sustainable community strategies in order to receive state funding, and allows projects that meet regional sustainable community strategies to qualify for CEQA exemption or streamlining.

California State Planning and Zoning Law [California Government Code Sections 65000 to 66037]

The law delegates most of the state's local land use and development decisions to cities and counties and describes laws pertaining to the regulation of land uses by local governments including: the general plan requirement, specific plans, subdivisions, and zoning.

C. REGIONAL AND LOCAL REGULATORY FRAMEWORK

General Plan Policies and Ordinances

- Land Use, Community Character, Transportation/Circulation, Housing, Growth Management, or similar elements

Specific Plans, Redevelopment Plans

Regional and Local Jurisdiction Ordinances and Codes

- Zoning, development, and design standards

Local Coastal Program Regulations (applicable to sections within or affecting coastal zone)

3.13.2 Affected Environment

A. DEFINITION OF RESOURCE STUDY AREA (RSA)

Required Information	Resource Study Area
▪ Aerial maps	▪ Half-mile around station locations or access

Required Information	Resource Study Area
▪ GIS base if possible ▪ Project description, conceptual engineering plans and profiles ▪ Right-of-way data showing parcel acquisitions ▪ Local and regional land use plans and other relevant land use documents ▪ Regional planning documents (RTIP, Coastal Zone Management Plan, habitat conservation plans, etc.) ▪ Community impact assessment technical report	points, and maintenance and other support facilities ▪ High-speed train (HST) study corridor (adjacent parcels/properties)

Study Area Setting

Key Information	Sources
▪ Applicable policy and plans (including coastal zone management plans and programs) ▪ Existing and planned land uses ▪ Local growth (historic and projected) ▪ Environmental constraints to future development ▪ Land use density and character ▪ Parcels available for development ▪ Parking supply ▪ Planned, approved, and reasonably foreseeable (project opening date/project description) development projects in study area	▪ General and regional plans ▪ Field surveys ▪ Socioeconomic data ▪ Aerial and ground photography ▪ Topographic maps ▪ GIS ▪ Planning and development agencies ▪ Chambers of Commerce ▪ California Coastal Commission (CCC) (as applicable to the section) ▪ NAVTEQ Parcel Boundaries ▪ Others (e.g. airport land use commissions)

3.13.3 Impact Analysis and Mitigation Strategies

A. METHODOLOGY FOR IMPACT ANALYSIS

In discussing development around potential HST stations, regional teams will use information provided by the Cambridge Systematics Inc. The evaluation should include potential future station-oriented development as well as development around maintenance and other support facilities. For highly urbanized areas, a TOD-type of development around stations should be addressed. The relationship between such development and (1) regional objectives and policies for such development, and (2) local objectives, policies, and plans should be addressed.

B. SIGNIFICANCE CRITERIA

Based on State CEQA Guidelines the project would result in a significant land use impact if it would:

- Conflict with any applicable land use plan, policy, or regulation of an agency with jurisdiction over the project (including, but not limited to the general plan, specific plan, local coastal program, or zoning ordinance) adopted for the purpose of avoiding or mitigating an environmental effect
- Cause a substantial change in pattern or intensity of land use incompatible with adjacent land uses

C. ENVIRONMENTAL CONSEQUENCES

Topic	Issues to Evaluate
Local Land Use Development	▪ Consideration of the proposed project in relationship to other planned projects and whether the project would facilitate planned development or induce unplanned development ▪ Consideration of whether the project would cause changes in travel patterns and accessibility ▪ Consideration of direct and indirect land use and development impacts associated with increased density of development around stations ▪ The regional growth and project's potential to induce growth will be evaluated in Section 3.17, Regional Growth.
Station Planning	▪ Evaluation of existing station area development and character (e.g., long-established single-family neighborhood, industrial area, retail area, historic district) ▪ Evaluation of existing station area parking supply and existing regional parking policies (see also, Transportation Section) ▪ Evaluation of plans and policies to increase station area development ▪ Evaluation of plans and policies to enhance transit-friendly character of station area development ▪ Evaluation of supportive zoning regulations near transit stations ▪ Evaluation of zoning ordinances that enhance transit-oriented character of station area development ▪ Evaluation of conceptual transit-oriented and/or station-oriented joint development opportunities that have been defined by the Authority working with engineering and design teams and local authorities
Land Use	▪ Consistency with land use plans and policies will be assessed through review and comparison of the project alternatives to the adopted plans and policies of local cities and regional jurisdictions within the study area that have authorities for land use, transportation and other relevant infrastructure, and consideration of densities in and around stations ▪ Land use compatibility will be assessed by identifying existing and planned land uses to proximate locations affected by project alternatives, and analyzing the relative sensitivity of these land uses to conditions arising from construction, operation or maintenance of the HST project alternatives ▪ Each project alternative will be evaluated for the effects on future development

D. MITIGATION

The Section Environmental Teams will:

- Review mitigation strategies described in the CEQA Findings of Fact (November 2005) and the Record of Decision (November 18, 2005) for the statewide EIR/EIS Program EIR/EIS and develop project-level measures consistent with strategies to avoid or minimize harm from land use impacts. Also review the same documents for the Bay Area to Central Valley Final Program EIR/EIS. Identify potential mitigation measures that government agencies could take to reduce negative land use impacts and to enhance positive land use development in support of transit.
- Identify other land use circumstances, conditions, or constraints under which the Authority operates that influence local and regional land use policies, plans, and implementation
- Consider land use planning conducted in the study area, as well as other relevant planning and development studies and reports

E. CUMULATIVE

See the *Caltrans Cumulative Impact Assessment Guidance*, which is applicable to non-highway projects: (http://www.dot.ca.gov/ser/cumulative_guidance/approach.htm). The following steps serve as guidelines for identifying and assessing cumulative impacts:

1. Determine if a cumulative impact analysis will be required for local growth, station planning, and land use
   - Prior to conducting the analysis of the project, coordinate with the Program Management Team and Section Environmental Team Cumulative Lead to determine whether local growth, station planning, and land use will be considered in the cumulative impact analysis. This process is initiated during project scoping and continues throughout the NEPA/CEQA analysis. Assume cumulative impact analysis will be required for any impacts even if these impacts are small or are mitigated to a less than significant level. Only resources with no or beneficial impacts (before or after mitigation) will not be required to be included in the cumulative impact analysis.

2. Define the geographic boundary or Resource Study Area for each resource to be addressed in the cumulative impact analysis. This may result in more than one RSA per resource (e.g., for biology you may have more than one habitat or species RSA; for air quality you may have a CO impact with a small RSA or a basinwide RSA for other impacts). Do not make arbitrary decisions about the boundary of the RSA; you should be able to explain why the boundary was chosen based on environmental characteristics.
   - Submit RSA(s) to the Section Environmental Team Cumulative Lead

3. Determine method for cumulative impact analysis
   - Coordinate with the Section Environmental Team Cumulative Lead on the method of analysis (project list and/or plan). In general a project list approach will be taken in conducting the cumulative impact analysis, however for some topics a plan or combined approach may be necessary (e.g., air, transportation, and land use).

4. Determine list of past, present, and reasonably foreseeable projects to include in the cumulative impact analysis (if using project list method), or appropriate plan(s) (if using plan method), or use a combined project list and plan approach.
   - The Section Environmental Team Cumulative Lead will identify what projects or/and plans will be used in the analysis. If the analysis is to use a project list approach, the Section Environmental Team Cumulative Lead will provide the Resource Specialist with the database of information for those projects. In some cases the Section Environmental Team Cumulative

Lead will coordinate with the Resource Specialists to determine what assumptions will be made in the cumulative impact analysis to account for unknown impacts of future projects (such as for projects in the early planning stages or without a certified environmental document).

5. Describe the current health and the historical context of each resource (see http://www.dot.ca.gov/ser/cumulative_guidance/approach.htm)
6. Identify cumulative impacts
   - Identify if there is a significant cumulative impact without the project
   - Identify the direct and indirect impacts of the proposed HST project that might contribute to a cumulative impact on the identified resources (this is information that should come from the impact analysis of the proposed HST project). The Resource Specialist will determine if the project contributes to an existing significant cumulative impact – or – result in a new cumulative impact when the project's impacts are added to the previously less than significant impacts of the other projects (i.e., one that tips the scales from less than significant to significant cumulative impact).
   - Based on the list of past, present, and reasonably foreseeable projects and the impacts of those projects and the direct and indirect impacts described above for the proposed HST project, or on analysis of the project in relation to existing plans, or combined project list and existing plans, assess the potential cumulative impacts and state whether the project's contribution to a cumulative impact is "cumulatively considerable" as defined in Guidelines 15065(a)(3)
7. Identify mitigation for significant cumulative impacts. Coordinate with the Section Environmental Team Cumulative Lead (also see http://www.dot.ca.gov/ser/cumulative_guidance/approach.htm).
8. Document results
   - Summarize the results of the cumulative impact analysis for local growth, station planning, and land use. This summary should include the identification of resources considered in the analysis, the RSA(s) for each resource, the conclusions concerning the health and historical context of understanding the resource; the proposed project impacts that might contribute to a cumulative impact, and the conclusions of the analysis. The Section Environmental Team Cumulative Lead will describe the other reasonably foreseeable actions considered in the cumulative impact analysis as part of the Cumulative Impacts section of the EIR/EIS.

3.13.4 Products

A. PROJECT EIR/EIS

1. Summary/Table for EIR/EIS Executive Summary
2. Section: Local Growth, Station Planning and Land Use
3. Section: Cumulative Impacts

3.14 Agricultural Land

Evaluation of impacts on agricultural lands is a requirement of the Farmland Protection Policy Act and the California Environmental Quality Act. The Program EIR/EIS included an evaluation that was broad and general for the Statewide System. Each project EIR/EIS will list all the farmlands in the corridor as known (based on the Agricultural Resources/ Farmlands and Land Use of the environmental document and the Farmland Mapping and Monitoring Program (FMMP)). In addition, the analysis will describe prior and on-going efforts to avoid conversion of agricultural land.

3.14.1 Laws, Regulations, and Orders

Key regulations for agricultural land that are most relevant to the proposed project are summarized below.

A. FEDERAL

National Environmental Policy Act (NEPA) [42 U.S.C. Section 4321 et seq.]

NEPA requires the consideration of potential environmental effects, including potential effects on farmlands and grazing lands, in the evaluation of any proposed Federal agency action. NEPA also obligates federal agencies to consider the environmental consequences and costs in their projects and programs as part of the planning process. General NEPA procedures are set forth in the Council on Environmental Quality (CEQ) regulations 23 CFR 771.

Farmland Protection Policy Act [7 U.S.C. Sections 4201 to 4209 and 7 C.F.R. Part 658]

The Farmland Protection Policy Act requires that before taking or approving any federal action that would result in conversion of farmland either directly or indirectly, the federal agency must examine the effects of the action using the criteria set forth in the Act, and, if there are adverse effects, must consider alternatives that could lessen such effects. To do so, the Act requires federal agencies to coordinate with Natural Resource Conservation Service (NRCS) if their activities may irreversibly convert farmland to nonagricultural use.

B. STATE

California Environmental Quality Act (CEQA) [Section 21000 et seq.] and CEQA Guidelines [Section 15000 et seq.]

CEQA requires state and local agencies to identify the significant environmental impacts of their actions, including potential significant impacts on agricultural land, and to avoid or mitigate those impacts, when feasible.

California Land Conservation Act [California Government Code Sections 51200 to 51295]

This Act, commonly known as Williamson Act, provides tax incentives for the voluntary enrollment of agricultural and open space lands in contracts between local government and landowners to deter the early conversion of agricultural and open-space lands.

C. REGIONAL AND LOCAL REGULATORY FRAMEWORK

Using the following regulatory documents, (1) Briefly describe local and regional policies related to possible effects on agricultural lands, and (2) Consider whether the project conflicts with adopted policies, plans, or programs supporting agricultural lands.

- City and County General Plans, Comprehensive Plans, Specific Plans, documents and maps provided by City and County planning departments, etc. applicable to the Study Area
- Local agricultural protection zoning ordinances (APZ)
- Relevant regional and local forest land plans, policies, and protection regulations
- Local Coastal Plans (LCP) (as applicable to a given section)
- Conservation Easement Programs
- Resource Management Plans, including those for forest lands

3.14.2 Affected Environment

A. DEFINITION OF RESOURCE STUDY AREA (RSA)

Required Information	Resource Study Area
▪ Conceptual design and project plans and profiles ▪ Right of way requirements ▪ Potential temporary construction easements ▪ Data for prime farmland, farmland of statewide importance, unique farmland, farmland of local importance, and Williamson Act contract land	▪ Same as for right-of-way and temporary easements for the alternatives ▪ Refer to other sections of the EIR/EIS as appropriate.

Key Information	Sources
▪ Resource Conservation Districts	▪ Local jurisdiction general plans ▪ U.S. Bureau of the Census (agricultural census data) ▪ Farmland Mapping and Monitoring Program (FMMP) database ▪ County Farm Bureaus ▪ University of California Cooperative Extension Service (farm advisors) ▪ Natural Resource Conservation Service (NRCS) ▪ American Farmland Trust

B. METHODOLOGY

- Identify Prime Farmlands, Farmlands of Statewide Importance, and Unique Farmlands as established by the Department of Conservation and Williamson Act contract lands, using the FMMP database
- Identify other lands subject to FPPA requirements including forest land, pastureland, cropland, or other land
- Identify Resource Conservation Districts, as established by the Department of Conservation, using California's Resource Conservation Districts Table

- Contact local agencies to determine if there are any established policies concerning farmland conversion to other land uses
- Document local policies for farmland conversion
- Describe existing farmlands and consultation done to identify them
- Submit NCRS-CPA-106 (used to assess impacts of corridor projects) to the NRCS office which handles that particular county and requests a determination as to whether the project location has farmland that is subject to the Farmland Protection Policy Act Consult with PMT about submittals of Forms AD-1006 (LESA point system accounting). Summarize appropriate parts of Farmland Conversion Impact Rating for Corridor-Type Projects Form NRCS-CPA-106 farmland determination
- Cross-reference all sections of the EIR/EIS that describe the resources

The following information should be provided in the environmental document:

- A detailed map or drawing of sufficient scale to identify the relationship of the alternatives to the agricultural properties
- Size (acres or square feet) and location (maps or other exhibits such as photographs, etc.) of the affected agricultural property
- Function of or type of agricultural activities on the property (etc.)
- Applicable clauses affecting the ownership, such as lease, easement, covenants, restrictions, or conditions, including forfeiture and Williamson Act contracts
- Early coordination with the NRCS

3.14.3 Impact Analysis and Mitigation Strategies

A. METHODOLOGY FOR IMPACT ANALYSIS

Government Code Section 51291(b) requires an agency to notify the Director of the California Department of Conservation and the planning department of the local governing body responsible for the administration of the preserve of Williamson Act contracted land proposed for acquisition for a public improvement project (regardless of whether it is a state or federally funded project, or the amount of total acreage involved).

- Discuss the impacts on prime farmlands and agricultural resources for each alternative: amount of land to be used, facilities and functions affected, noise, visual, etc
- Where an alternative (or alternatives) uses land from more than one agricultural property, prepare a summary table comparing the impacts of the alternatives. Those impacts that can be quantified should be quantified while other should be described.
- Determine the number of acres/hectares of Prime Farmland that would be converted for project use or severed by the proposed improvement based on an overlay of the GIS Prime Farmland database and the conceptual design and project plans and profiles
- Determine the number of acres/hectares of Farmlands of Statewide Importance that would be converted for project use or severed by the proposed improvement based on an overlay of the GIS Farmlands of Statewide Importance database and the conceptual design and project plans and profiles
- Determine the number of acres/hectares of Farmlands of Local Importance and Williamson Act lands that would be converted for project use or severed by the proposed improvement

based on an overlay of the GIS Farmlands of Local Importance database and the conceptual design and project plans and profiles

- Coordinate with NRCS and prepare Farmland Conversion Impact Rating (provide data to NRCS)

- Discuss the results of preliminary consultation with the NRCS and California Department of Conservation. Generally, the consultation should include discussion of avoidance alternatives, impacts to the property, and measures to minimize harm. In addition, the consultation should include, where necessary, a discussion of significance and primary use of the property.

Also consider consultations with the California Farm Bureau, as appropriate for a given section.

- Discuss impacts of project on existing agriculture and/or forest zoning

The following information should be provided in the environmental document:

- Provide a map showing the location of all farmlands and/or forest land in the project area
- Discuss the effects of the various alternatives
- Identify measures to avoid or reduce the impacts
- Provide the rationale for decisions made during the farmland and/or forest land evaluation
- Total Prime, of Statewide Importance, and Unique Farmlands Area Acquired/Converted
- Total of Local Importance and Williamson Act Farmlands Area Acquired/Converted
- Identification of Areas of Concern and Comparison of Impacts on Agricultural Land (Displacement, Severance, and Associated Costs)
- Farmland Conversion Impact Rating (per National Resource Conservation Service Coordination)

- Total acres of forest land affected (acquired or converted)

B. SIGNIFICANCE CRITERIA

According to State CEQA Guidelines Appendix G, the project would result in a significant impact on agricultural lands and forest resources if it would:

- Convert Prime Farmland, Unique Farmland, Farmland of Statewide Importance (Farmland) as shown on the maps prepared pursuant to the Farmland Monitoring and Mapping Program of the California Resources Agency, to a non-agricultural use
- Conflict with existing zoning for agricultural use, or a Williamson Act contract
- Conflict with existing zoning for, or cause rezoning of, forest land (as defined in Public Resources Code section 12220(g)), timberland (as defined by Public Resources Code section 4526), or timberland zoned Timberland Production (as defined by Government Code section 51104(g))

- Result in the loss of forest land or conversion of forest land to non-forest use

- Involve other changes in the existing environment which, due to their location or nature, could result in conversion of Farmland, to non-agricultural use or conversion of forest land to non-forest use
-

C. ENVIRONMENTAL CONSEQUENCES

Topic	Issues to Evaluate
• Impact on Agricultural Land	. ▪ Conversion of Prime Farmland, Unique Farmland, Farmland of Statewide Importance (Farmland). *NOTE:* The conversion of farmland requires approval of the NRCS. No permits are required. ▪ Conflict with existing zoning for agricultural use, or a Williamson Act contract ▪ Other direct and indirect effects which could result in conversion of Farmland, to non-agricultural use ▪ Areas of concern and comparison of impacts on agricultural land (displacement, severance, and associated costs). *NOTE:* Consult with PMT with regards to these social and economic issues associated with conversion of agricultural land. ▪ Identify mitigation approaches/needs
• Impact on Forest Land	▪ Loss of forest land or conversion of forest land to non-forest use ▪ Conflict with existing zoning for, or cause rezoning of, forest land, timberland, or timberland zoned Timberland Production ▪ Other direct and indirect effects which could result in conversion of forest land to non-forest use ▪ Identify mitigation approaches/needs

D. MITIGATION

- Review mitigation strategies described in the CEQA Findings of Fact (November 2005) and the Record of Decision (November 18, 2005) for the statewide EIR/EIS and develop project-level measures consistent with strategies to avoid or minimize impacts. Also review the same documents for the Bay Area to Central Valley Final Program EIR/EIS.

E. CUMULATIVE

See the *Caltrans Cumulative Impact Assessment Guidance*, which is applicable to non-highway projects: (http://www.dot.ca.gov/ser/cumulative_guidance/approach.htm). The following steps serve as guidelines for identifying and assessing cumulative impacts:

1. Determine if a cumulative impact analysis will be required for agricultural or forest land
   - Prior to conducting the analysis of the project, coordinate with the Program Management Team and Section Environmental Team Cumulative Lead to determine whether agricultural land and forest will be considered in the cumulative impact analysis. This

process is initiated during project scoping and continues throughout the NEPA/CEQA analysis. Assume cumulative impact analysis will be required for any impacts even if these impacts are small or are mitigated to a less than significant level. Only resources with no impact or with beneficial impacts (before or after mitigation) will not be required to be included in the cumulative impact analysis.

2. Define the geographic boundary or Resource Study Area (RSA) for agricultural land and/or forest land resource to be addressed in the cumulative impact analysis. Do not make arbitrary decisions about the boundary of the RSA; you should be able to explain why the boundary was chosen based on environmental characteristics.
   - Submit RSA(s) to the Section Environmental Team Cumulative Lead
   - Determine method for cumulative impact analysis
   - Coordinate with the Section Environmental Team Cumulative Lead on the method of analysis. In general a plan or projections approach will be taken in conducting the cumulative impact analysis.
3. Determine the appropriate plan(s) and/or projections to be used in the cumulative impact analysis
   - The Section Environmental Team Cumulative Lead will identify what plans and/or projections will be used in the analysis. This is expected to include the FMMP for past and present conditions and the applicable city and county general plans for projections of future agricultural land conversions.
4. Describe the current state and context of the agricultural land resource and/or forest land resource (seehttp://www.dot.ca.gov/ser/cumulative_guidance/approach.htm)
5. Identify cumulative impacts
   - Identify if there is a significant cumulative impact without the project
   - Identify the direct and indirect impacts of the proposed HST project that might contribute to a cumulative impact on agricultural land and/or forest land (this is information that should come from the impact analysis of the proposed HST project). The Resource Specialist will determine if the project contributes to an existing significant cumulative impact or result in a new cumulative impact when the project's impacts are added to the previously less than significant impacts of the other projects (i.e., one that tips the scales from less than significant to significant cumulative impact).
   - Based on the analysis of the project in relation to existing plans and/or projections, assess the potential cumulative impacts and state whether the project's contribution to a cumulative impact is "cumulatively considerable" as defined in CEQA Guidelines 15065(a)(3)
6. Identify mitigation for significant cumulative impacts, if feasible. Coordinate with the Section Environmental Team Cumulative Lead (also see http://www.dot.ca.gov/ser/cumulative_guidance/approach.htm).
7. Document results
   - Summarize the results of the cumulative impact analysis for agricultural land and/or forest land This summary should include the identification of resources considered in the analysis, the RSA(s) for each resource, the conclusions concerning the health and historical context of understanding the resource; the proposed project impacts that might contribute to a cumulative impact, and the conclusions of the analysis. The Section

Environmental Team Cumulative Lead will describe the other reasonably foreseeable actions considered in the cumulative impact analysis as part of the Cumulative Impacts section of the EIR/EIS.

3.14.4 Products

A. PROJECT EIR/EIS

1. Summary/Table for EIR/EIS Executive Summary
2. Section: Agricultural Land
3. Section: Cumulative Impacts
4. Consultation

3.15 Parks, Recreation, and Open Space

3.15.1 Laws, Regulations, and Orders

Key regulations for parks, recreation, and open space resources that are most relevant to the proposed project are summarized below.

A. FEDERAL

National Environmental Policy Act (NEPA) [42 U.S.C. Section 4321 et seq.]

NEPA requires the consideration of potential environmental effects, including potential effects to parks, recreation, and open space resources, in the evaluation of any proposed Federal agency action. NEPA also obligates federal agencies to consider the environmental consequences and costs in their projects and programs as part of the planning process. General NEPA procedures are set forth in the Council on Environmental Quality (CEQ) regulations 23 CFR 771.

National Park Service Organic Act [16 U.S.C.]

The Act created the National Park Service (NPS), and agency within the Department of the Interior, to administer the nation's national parks, which are areas of national significance afforded special recognition and protection in accordance with various acts of Congress. The Act, which created the Park Service, also set the purpose of the park system: "The fundamental purpose of the parks is to conserve the scenery and the natural and historic objects and the wildlife therein and to provide for the enjoyment of the same in such manner and by such means as will leave them unimpaired for the enjoyment of future generations." The NPS is required to keep park units in an unimpaired state in perpetuity, and to provide the highest quality of use and enjoyment of the entire system by visitors today and in the future. Areas in parks designated as natural zones must be managed to ensure that natural ecological processes operate unimpaired unless otherwise specifically provided for in the law creating them, and the NPS is required to manage native animal life for its essential role in natural ecosystems. Historic zones must be managed to provide full protection for cultural resources.

Wilderness Act [16 U.S.C. Sections 1131 to 1136]

The Wilderness Act established a National Wilderness Preservation System to be comprised of federally owned areas designated by Congress as "wilderness areas". The system is to be administered for the use and enjoyment of the American people in such manner as will leave those areas unimpaired for future use as wilderness, and so as to provide for the protection of these areas, the preservation of their wilderness character, and for the gathering and dissemination of information regarding their use and enjoyment as wilderness.

National Trails System Act [Public Law 90-543, as amended through Public Law 109-418]

The Act instituted a national system of recreation, scenic, and historic trails by designating the Appalachian Trail and the Pacific Crest Trail as the initial components of that system, and by prescribing the methods and standards according to which additional components may be added to the system.

B. STATE

California Environmental Quality Act (CEQA) [Section 21000 et seq.] and CEQA Guidelines [Section 15000 et seq.]

CEQA requires state and local agencies to identify the significant environmental impacts of their actions, including potential significant impacts to parks, recreation, and open space resources, and to avoid or mitigate those impacts, when feasible.

California Public Park Preservation Act [California Public Resources Code Sections 5400 to 5409]

The Act provides that a public agency that acquires public parkland for non-park use must either pay compensation that is sufficient to acquire substantially equivalent substitute parkland or provide substitute parkland of comparable characteristics.

California Coastal Act [California Public Resources Code Sections 30000 to 39000] ***(only applicable to sections within or affecting coastal zone)***

The California Coastal Act applies to all projects significantly affecting areas under the control of the State Coastal Zone Management Agency (CZMA). Before approval is granted, a consistency determination with the approved Coastal Zone Management Plan (CZMP) or Local Coastal Program (LCP) is required.

C. REGIONAL AND LOCAL REGULATORY FRAMEWORK

- Local and Regional General Plans: Open Space, Land Use, Conservation, or other similar elements
- Local and Regional parks master plans
- Zoning Ordinances and Codes
- Comprehensive Plans, Specific Plans, Redevelopment Plans
- Documents and maps provided by City and County planning departments, etc. applicable to the section
- Local Coastal Programs and Local Coastal Programs regulations (only applicable to sections within or affecting coastal zone)
- State parks, wilderness areas, and other open space/recreation-related plans, regulations, and documents as applicable to the section

3.15.2 Affected Environment

A. DEFNITION OF RESOURCE STUDY AREA (RSA)

Sources of Information	Resource Study Area
▪ Project description ▪ Conceptual engineering plans and profiles ▪ Aerial maps, GIS base ▪ Right-of-way data showing parcel acquisitions ▪ Local and regional plans, in particular open space, land use, and conservation elements of local general plans ▪ Local and regional parks master plans ▪ Regional planning documents (RTIP, Coastal Zone Management Plan, etc.)	▪ Resource study area may vary depending on topic being analyzed, which should be informed by the scoping process, but should generally cover the following: ▪ ½- mile around station locations, maintenance and other support facilities, and access points ▪ HST study corridor (adjacent parcels/properties) ▪ National, regional, and local open space, parks, recreation areas and facilities (including schools if available to public for recreational use), that may be affected ▪ Scoping comments ▪ Cross-reference to section listing 4(f) resources which defines the study area as 1,000 feet on either side of the right-of way and radius around the station, and to other appropriate section where the study area is different for parks, recreation areas, or recreation facilities

B. Study Area Setting

Key Steps	Sources of Information
▪ Describe existing regional and local study area open space, parks, and recreation areas (including trails and bikeways), and recreation facilities. Include schools to the extent they are available for public recreation purposes. ▪ Describe planned, approved, and reasonably foreseeable open space, parks, and recreation facilities in study area ▪ Describe vehicular and pedestrian access to public open space areas, parks, and recreation areas and facilities ▪ Use maps and tables to help describe the setting ▪ Cross-reference all sections of the EIR/EIS that describe open space, parks, and recreation resources	▪ EIR/EIS sections: Local Growth, Station Planning, and Land Use; Socioeconomics, Communities and Environmental Justice; Section 4(f) and (6f) Evaluations; and Aesthetics and Visual Resources ▪ Program EIR/EIS ▪ General and regional plans ▪ Field surveys ▪ Aerial and ground photography ▪ GIS data

3.15.3 Impact Analysis and Mitigation Strategies

A. METHODOLOGY FOR IMPACT ANALYSIS

This section of the EIR/EIS is closely related to the Local Growth, Station Planning, and Land Use; and Socioeconomics, Communities and Environmental Justice sections, and to the Section 4(f) and (6f) Evaluations with regards to the 4(f) public park and recreation area properties. The Parks, Recreation, and Open Space section together with the Local Growth, Station Planning, and Land Use; and Socioeconomics, Communities and Environmental Justice sections will jointly provide information constituting the Community Impacts Assessment (CIA). Therefore, as with those related sections, methodology is generally based on the *Caltrans Environmental Handbook Volumes 4: Community Impacts Assessment* and the Caltrans guidance impact analysis methods (see Sections 4-6, 4-7, and 4-8 in the Caltrans guidance at http://www.dot.ca.gov/ser/envhand.htm). Also refer to each related section methodologies as appropriate for cross-referencing. The impact analyses should be conducted, based upon the existing data gathered, as noted above. Both construction-related and operational impacts need to be discussed, as well as direct impacts and indirect impacts. Those impacts that can be quantified should be quantified while others should be described.

Identify and discuss the direct and indirect impacts of the proposed project, including:

- Any physical barriers the project would create (or perceived barriers) separating users and visitors from recreation areas or facilities, including hiking, biking, and equestrian trails
- Changes in access and parking for recreation facilities
- Impacts on recreational areas and facilities: amount of land to be used, facilities and functions affected, noise, visual, etc. (see other sections for impacts)
- Long-term impacts and short-term interruptions of use of the open space or recreational resource
- Any project-related increase in the use of existing neighborhood and regional parks or other recreational facilities such that substantial physical deterioration of the facility would occur or be accelerated
- Identify the construction impacts of the proposed project
- Changes to access and reduction in parking capacity for parks, recreation areas, and recreation facilities
- Disruption of established community and visitor use of open space, parks, recreation areas and facilities due to temporary construction easements and general construction activity
- Construction impacts on parks and recreation areas and facilities, including air pollutant emissions, noise and vibration, traffic and pedestrian circulation and access, traffic and pedestrian safety, visual (including shade and shadow effects), etc

B. SIGNIFICANCE CRITERIA

Based on State CEQA Guidelines the project would result in a significant impact on parks, recreation, and open space if it would:

- Increase the use of existing neighborhood and regional parks or other recreation facilities such that substantial physical deterioration of the facility would occur or be accelerated
- Result in the physical alteration of the existing parks or other recreation facilities or result in a need to provide new parks or other recreation facilities, the construction of which could cause significant environmental impacts, in order to maintain acceptable service ratios or other performance objectives

- Conflict with established or planned open space, parks, or recreational use of the area

The project would also result in a significant impact if it would:

- Create a physical barrier (or a perceived barrier) to an established use of open space, park, recreation area (including trails) or recreation facility, or to the access to these areas or facilities
- Result in acquisition of a recreational resource that would result in a substantially diminished capacity to use the resource for specific and defined recreational activities. The acquisition of a portion of a recreational facility that is oriented toward passive use would not constitute a significant impact, unless the passive nature of the resource is the primary reason that the resource is valued and the amount being acquired would substantially diminish that value. In such a case, a significant impact would occur.

C. ENVIRONMENTAL CONSEQUENCES

Topic	Issues to Evaluate
Parks, Recreation, and Open Space Resources	▪ Identify proximity of project alternatives to nearby existing or proposed parks, recreation, and open space resources ▪ Identify whether project alternatives would conflict with established or planned open space, parks, or recreational use of the area ▪ Identify potential for a physical barrier (or a perceived barrier) to access to or use of open space, park, recreation area, or recreation facility ▪ Conflict with established or planned open space, parks, or recreational use of the area ▪ Create a physical barrier (or a perceived barrier) to the access to or established use of open space, park, recreation area (including trails), or recreation facility ▪ Identify mitigation approaches/needs
Open Space Resources	▪ Identify construction impacts that would result in temporary lack of access, barrier to, or closure of an open space resource ▪ Result in acquisition of an open space resource (including hiking, biking, and equestrian trails), that would result in a diminished capacity to use that resource or in a substantially reduced value of that resource, including its passive nature value ▪ Identify mitigation approaches/needs
Parks and Recreational Resources	▪ Identify whether project alternatives would result in diminished capacity to use the resource for specific and defined recreational activities ▪ Identify whether project alternatives diminish the passive nature of the resource, which is its primary value ▪ Indirect impacts to community facilities identified in other sections of the environmental document ▪ Identify parks, recreation, and open space resources in the vicinity of proposed HST stations that may potentially experience increased use, including existing neighborhood and regional or other recreation facilities such that substantial physical deterioration of the facility would occur or be accelerated ▪ Result in the physical alteration of the existing or a need to provide new parks or other recreation facilities the construction of which could cause

Topic	Issues to Evaluate
	significant environmental impacts, in order to maintain acceptable service ratios or other performance objectives ▪ Identify indirect impacts to parks, recreation, and opens space resources/facilities as defined in other sections such as noise/vibration, diminished access, visual quality and aesthetics (including shade and shadows), and treatment of 4(f) resources. ▪ Identify mitigation approaches/needs

D. MITIGATION

The Section Environmental Teams will:

- Review mitigation strategies described in the CEQA Findings of Fact (November 2005) and the Record of Decision (November 18, 2005) for the statewide Program EIR/EIS, and the Bay Area to Central Valley Program EIR/EIS Findings of Fact, July 9, 2008, and when available, the related Record of Decision, and develop project-level measures consistent with strategies to avoid or minimize parks, recreation, and open space impacts.
- Address obligations to replace or fund a replacement for certain park properties, payment of fees, and other similar requirements. These mandatory requirements need to be addressed to provide context for the identification of mitigation measures for both project-specific and cumulative impacts.
- Identify all feasible mitigation measures to reduce the impacts, and assess need for additional mitigation, including design variations
- Identify needed permits and approvals, including permits or determinations from CCC or a local jurisdiction, as applicable
- Consider and integrate input from the affected agencies, communities, and organizations

E. CUMULATIVE

See the *Caltrans Cumulative Impact Assessment Guidance*, which is applicable to non-highway projects: (http://www.dot.ca.gov/ser/cumulative_guidance/approach.htm). The following steps serve as guidelines for identifying and assessing cumulative impacts:

1. Determine if a cumulative impact analysis will be required for parks, recreation, open space impacts
   - Prior to conducting the analysis of the project, coordinate with the Program Management Team and Section Environmental Team Cumulative Lead to determine whether parks, recreation, and open space impacts will be considered in the cumulative impact analysis. This process is initiated during project scoping and continues throughout the NEPA/CEQA analysis. Assume cumulative impact analysis will be required for any impacts even if these impacts are small or are mitigated to a less than significant level. Only resources with no or beneficial impacts (before or after mitigation) will not be required to be included in the cumulative impact analysis.
2. Define the geographic boundary or Resource Study Area (RSA) for each resource to be addressed in the cumulative impact analysis. This may result in more than one RSA per resource (e.g., for open space you may have different RSA than for that for local parks or recreation facilities). Do not make arbitrary decisions about the boundary of the RSA; you should be able to explain why the boundary was chosen based on environmental characteristics.

- Submit RSA(s) to the Section Environmental Team Cumulative Lead

3. Determine method for cumulative impact analysis
   - Coordinate with the Section Environmental Team Cumulative Lead on the method of analysis (project list, plan, or list and plan). A combined plan and project list approach may be necessary for the parks, recreation, and open space cumulative impact analysis.

4. Determine list of past, present, and reasonably foreseeable projects to include in the cumulative impact analysis (if using project list method), appropriate plan(s) (if using plan method), or major projects and appropriate plans (if using combined list and plan method).
   - The Section Environmental Team Cumulative Lead will identify what projects and/or plans will be used in the analysis. If the analysis is to use a project list approach, the Section Environmental Team Cumulative Lead will provide the Resource Specialist with the database of information for those projects. In some cases the Section Environmental Team Cumulative Lead will coordinate with the Resource Specialists to determine what assumptions will be made in the cumulative impact analysis to account for unknown impacts of future projects (such as for projects in the early planning stages or without a certified environmental document). The analysis may use a combined list and plan approach.

5. Describe the current health and the historical context of each resource (see http://www.dot.ca.gov/ser/cumulative_guidance/approach.htm)

6. Identify cumulative impacts
   - Identify if there is a significant cumulative impact without the project
   - Identify the direct and indirect impacts of the proposed HST project that might contribute to a cumulative impact on the identified resources (this is information that should come from the impact analysis of the proposed HST project). The Resource Specialist will determine if the project contributes to an existing significant cumulative impact or results in a new cumulative impact when the project's impacts are added to the previously less than significant impacts of the other projects (i.e., one that tips the scales from less than significant to significant cumulative impact).
   - Assess the potential cumulative impacts and state whether the project's contribution to a cumulative impact is "cumulatively considerable" as defined in Guidelines 15065(a)(3), based on the list of past, present, and reasonably foreseeable projects and the impacts of those projects and the direct and indirect impacts described above for the proposed HST project; or on analysis of the project in relation to existing plans; or on analysis of combined project list and existing plans approach.
   - Identify mitigation for significant cumulative impacts. Address obligations to replace or fund a replacement for certain park properties, payment of fees, and other similar requirements. These mandatory requirements are not mitigation measures, but need to be addressed to provide context for the identification of mitigation measures for both project-specific and cumulative impacts. Coordinate with the Section Environmental Team Cumulative Lead, also see http://www.dot.ca.gov/ser/cumulative_guidance/approach.htm).

7. Document results
   - Summarize the results of the cumulative impact analysis for community impacts. This summary should include the identification of resources considered in the analysis, the RSA(s) for each resource, the conclusions concerning the health and historical context of understanding the resource; the proposed project impacts that might contribute to a cumulative impact, and the conclusions of the analysis. The Section Environmental Team

Cumulative Lead will describe the other reasonably foreseeable actions considered in the cumulative impact analysis as part of the Cumulative Impacts section of the EIR/EIS.

3.15.4 Products

A. PROJECT EIR/EIS

1. Summary/Table for EIR/EIS Executive Summary
2. Section: Parks, Recreation, and Open Space
3. Section: Cumulative Impacts

3.16 Aesthetics and Visual Quality

3.16.1 Laws, Regulations, and Orders

Key regulations for aesthetics and visual quality that are most relevant to the proposed project are summarized below.

A. FEDERAL

National Environmental Policy Act (NEPA) [42 U.S.C. Section 4321 et seq.]

NEPA requires the consideration of potential environmental effects, including potential aesthetic and visual effects, in the evaluation of any proposed Federal agency action. NEPA also obligates federal agencies to consider the environmental consequences and costs in their projects and programs as part of the planning process. General NEPA procedures are set forth in the Council on Environmental Quality (CEQ) regulations 23 CFR 771.

Department of Transportation Act, Section 4(f) [DOT Act 49 U.S.C.]

The DOT Act is aimed to preserve the natural beauty of the countryside, public park and recreation lands, wildlife and waterfowl refuges, and historic sites.

Federal Railroad Administration (FRA) [64 FR Part 28545]

The FRA's *Procedures for Considering Environmental Impacts* states that "the EIS should identify any significant changes likely to occur in the natural environment and in the developed environment. The EIS should also discuss the consideration given to design quality, art, and architecture in project planning and development as required by DOT Order 5610.4".

B. STATE

California Environmental Quality Act (CEQA) [Section 21000 et seq.] and CEQA Guidelines [Section 15000 et seq.]

CEQA requires state and local agencies to identify the significant environmental impacts of their actions, including potential significant aesthetic and visual impacts, and to avoid or mitigate those impacts, when feasible.

State Scenic Highways [Streets and Highway Code Sections 260 to 263]

State Scenic Highways lists highways that are either eligible for designation as a scenic highway or already are designated as a scenic highway.

C. REGIONAL AND LOCAL REGULATORY FRAMEWORK

- General Plan policies
  - Cultural Resources, Historic Preservation, Land Use, or similar elements
- Local and regional policies related to possible aesthetic and visual resource effects
- Adopted policies, plans, programs, supporting preservation of local aesthetic and visual resources

3.16.2 Affected Environment

A. DEFINITION OF RESOURCE STUDY AREA (RSA)

Sources of Information	Resource Study Area
▪ ▪ Project description (conceptual design and project plans and profiles and massing diagrams for stations and maintenance facilities) ▪ Proposed station locations and designs, plans and profiles ▪ Structures: Large cuts, fills, tunnels, bridges/over-crossings, aerial structures, retaining or sound walls; substations, catenaries, project-related transmission lines or other ancillary infrastructure ▪ Other visible project-related components ▪ Information about potential relocations of visible utilities (power lines, etc.) ▪ Street modifications ▪ Construction easements and staging areas ▪ Proposed project appurtenances ▪ Proposed conceptual landscaping and landscape buffers	▪ Identify viewshed of project (using GIS and/or other appropriate tools) ▪ Map viewshed within up to 3 miles of any project feature, representing approximate limits of human eyesight to see project features of this type (for large visible changes such as aerial structures, tunnel portals, or large cuts/fills that could be seen from a long distance, consider expanding viewshed as appropriate) ▪ Identify limiting factors, such as distance, climate, air quality, topography, vegetation, existing development blocking views, etc

Inventory of Visual Resources

Key Steps	Sources of Information
▪ Identify landscape components (landform, water, vegetation and manmade development) that are characteristic of the regional landscape and the immediate project area ▪ Identify, inventory, and map the visual resources within the RSA. o Identify if any roadways in the viewshed are scenic highways or corridors o Address any district, sites and features that are regionally or nationally recognized for their cultural significance o Inventory important visual or scenic resources within the viewshed o Identify any astronomical observatories or viewing locations that may be affected by changes in illumination levels related to the project o Identify any existing development specifically oriented to views within the viewshed (restaurants, hotels, residences, offices, etc.) o Identify public parks, recreation areas, wildlife and waterfowl refuges and historic sites potentially subject to Section 4(f) or Section 106 effects	▪ Aerial and satellite photography ▪ Site visits (take color photos and map resources showing viewpoint and angle of view) ▪ Program EIR/EIS; review GIS mapping for scenic resource areas along corridor ▪ Federal Highway Administration (FHWA) Visual Impact Assessment for Highway Projects (FHWA-HI-88-054) (currently not available from FHWA website, but available from Caltrans at http://www.dot.ca.gov/ser/downloads/visual/FHWA Visual ImpactAssmt.pdf) ▪ Caltrans Standard Environmental Reference, Environmental Handbook Volume 1, Chapter 27 – Visual and Aesthetic Review was also referred to in the preparation of this methodology (available at http://www.dot.ca.gov/ser/vol1/sec3/community/ch27via/chap27via.htm) ▪ General plans, specific plans, redevelopment plans, public lands plans, etc. for references to important visual or scenic resources ▪ Local policy documents and Caltrans list of Eligible and Officially Designated Routes (http://www.dot.ca.gov/hq/LandArch/scenic/cahisys.htm) ▪ Coordinate with cultural resources, biological resources, and other resources teams as appropriate

Identify Viewer Groups

Key Steps	Sources of Information
▪ Identify viewer groups with the view FROM and TO the future HST (roadway/highway users, resident, other development occupants, parks/trail users, and other special interest groups) Include a viewer group for the future HST rider ▪ Evaluate the viewer groups' relative exposure to the view and relative sensitivity to visual change, by considering such factors as distance from view, position of viewers, direction of view, number of viewers, duration of view, viewer activity and awareness, local values, cultural or natural significance of the view, and uniqueness of the view ▪ Document the viewer group evaluation	▪ Same as above

Landscape Units and Key Viewpoints

Key Steps	Sources of Information
▪ Divide the study area into appropriate landscape units that are spatially enclosed and/or visually bounded, having distinct landscape character and interrelated visual elements ▪ Select key viewpoints representative of each landscape unit. Select additional viewpoints to represent scenic resources, parks, historical districts/ structures, and any viewer groups not otherwise represented. ▪ Map landscape units and key viewpoints ▪ Take color photos FROM key viewpoints, and OF key viewpoints	▪ Same as above

Evaluate Existing (Baseline) Visual Character

Key Steps	Sources of Information
▪ Define existing visual character of each viewpoint's view, including natural and man-made features that dominate the landscape (foreground, middle ground, and background), in terms of visual pattern elements of form, line, color, texture, and pattern character (dominance, scale, diversity, and continuity) ▪ Describe this character analysis qualitatively	▪ Same as above

Evaluate Existing (Baseline) Visual Quality

Key Steps	Sources of Information
▪ Evaluate the existing visual quality of each viewpoint's view in terms of vividness, intactness, and unity.Document the existing visual quality in matrix form (such as described in the FHWA guidance), and score each view as a numeric score (1 to 7 with 7 being the highest) or using qualitative "very high, high, moderate, low, very low" method	▪ Same as above

3.16.3 Impact Analysis and Mitigation Strategies

A. METHODOLOGY AND THRESHOLDS OF SIGNIFICANCE

The aesthetics and visual quality analysis will generally follow the methodology described in U.S. Department of Transportation (USDOT) Federal Highway Administration (FHWA) Visual Impact Assessment of Highway Projects (FHWA-HI-88-054) (currently not available from FHWA website, but available from Caltrans at HTTP://WWW.DOT.CA.GOV/SER/DOWNLOADS/VISUAL/ FHWA Visual ImpactAssmt.pdf). Also see the Caltrans Standard Environmental Reference, Environmental Handbook Volume 1, Chapter 27 – Visual and Aesthetic Review (available at HTTP://WWW.DOT.CA.GOV/SER/VOL1/SEC3/COMMUNITY/CH27VIA/CHAP27VIA.HTM).

Additional analyses may be required at specific locations, such as, but not limited to,:

- Illumination studies in areas that potentially affect observatories
- Light and glare studies
- Oak tree surveys (see Biological Resources and Cultural Resources)
- Shade and shadow studies in areas sensitive to such changes
- Special analyses required by affected public land agencies
- Assess aesthetics and visual quality impact, considering short-term, construction-period-only impacts, impacts shortly after construction (before and after revegetation), and at full landscape maturity and during operation of the project

Inventory of Visible Physical Changes

- Referring to the project description, briefly describe the visual characteristics of the project alternatives, including the rail line, support structures; stations; landform alterations; auxiliary facilities, parking areas; lighting and signage, roadway realignments, removal of vegetation, removal of existing structures, new landscaping and revegetation, as well as but not limited to short-term construction-related components such as construction staging areas, temporary structures, construction equipment, lighting, detours, etc. Also consider the visual characteristics of other mitigation measures, such as noise walls, hazardous materials remediation, or traffic improvements (coordinate with other Section Environmental Team specialists).
- For any visible physical changes that have not been designed yet, work with Section Engineering Team to make logical assumptions; document assumptions
- Create photo simulations supported by any additional graphic illustrations, as appropriate of the proposed project alternatives at key viewpoints, including massing studies, sketches, photographs of similar facilities, and/or photo-simulations. If necessary in highly sensitive areas, include graphic representations at various stages of the project implementation, during construction, just after construction without landscape, with landscape at half maturity, and at full maturity.

Changes in Visual Character

- Describe changes to the visual character of each viewpoint with each alternative, in terms of changes to natural and man-made features that dominate the landscape (foreground, middle ground, and background); and changes in visual pattern elements of form, line, color, texture, and pattern character (dominance, scale, diversity, and continuity)
- Compare qualitatively to existing visual character

Changes in Visual Quality

- Evaluate changes in the visual quality in terms of vividness, intactness, and unity, as described in the FHWA Visual Impact Assessment of Highway Projects, and compare these to the existing visual quality
- Document the proposed visual quality in matrix form (such as described in the FHWA guidance), and score each view as a numeric score or using qualitative “very high, high, moderate, low, very low” method
- Compare existing and proposed visual quality at each viewpoint for each alternative, and determine the level of visual quality change (expressed as a numeric score or using qualitative “low, medium, high” score)

Viewer Group Responses

- Evaluate viewer response based on viewer exposure and sensitivity, visual character changes, and visual quality changes
- Document the proposed visual quality in matrix form (such as described in the FHWA guidance), and score each view as a numeric score or using qualitative "very high, high, moderate, low, very low" method
- Compare existing and proposed visual quality at each viewpoint for each alternative, and determine the level of visual quality change (expressed as a numeric score or using qualitative "low, medium, high" score)

Aesthetics and Visual Quality Impact

- Based on the analysis above, evaluate whether visual quality impacts would occur, considering changes in visual character, changes in visual quality, and viewer group response at each viewpoint for each project alternative
- Determine the significance of the impacts (expressed as no impact, less-than-significant impact, or significant impact) when considering the thresholds of significance

Additional Studies as Necessary

- Conduct additional special studies to address specific locations, such as illumination studies in areas that affect observatories, oak tree surveys (coordinated with Section Environmental Team Biological Specialist), shade and shadow studies in areas sensitive to such changes, or special analyses required by affected public land agencies
- Determine the significance of the impacts (expressed as no impact, less-than-significant impact, or significant impact) when considering the thresholds of significance for special studies

B. SIGNIFICANCE CRITERIA

Based on State CEQA Guidelines, Appendix G, the project would result in a significant impact on aesthetics and visual quality if it would:

- Have a substantial adverse effect on a scenic vista
- Substantially damage scenic resources, including, but not limited to, trees, rock outcroppings, and historic buildings within a state scenic highway
- Substantially degrade the existing visual character or quality of the site and its surroundings
- Create a new source of substantial light or glare which would adversely affect day or nighttime views in the area

A significant impact would also occur of the project would introduce elements that would conflict with the visual character of a historic district, state or federally-listed or eligible historic property, and/or substantially affect a feature or area identified as an important visual resource.

By contrast, the project would be considered to result in a beneficial visual impact if it eliminates a dominant feature in the landscape that currently detracts from scenic qualities or blocks scenic vistas.

C. ENVIRONMENTAL CONSEQUENCES

Topic	Issues to Evaluate
Construction period visual impacts	▪ Potential for the construction or construction area to be visible to sensitive

Topic	Issues to Evaluate
	viewers ▪ Potential for the construction or construction area lighting to spill over into adjacent sensitive land uses ▪ Potential for construction area dust to result in substantial impacts related to visibility (airborne dust) or cleanup (i.e., after dust settles) for sensitive viewers ▪ Introduction of an incompatible visual element resulting in a substantial decline in visual quality as seen from high-sensitivity viewing locations ▪ Introduction of elements that would be inconsistent with the surrounding visual character in a historic district, or other area that is designated in a policy document or is otherwise identified as being important visually; <u>or adversely affect the integrity of a state or federally-listed or eligible historic property</u> ▪ Alteration of lighting, shade, or shadow conditions in areas sensitive to such changes ▪ Substantial alteration of views from a scenic highway or roadway
Introduce incompatible visual elements	▪ Potential for the project to introduce land form changes, structures, lighting, etc., that are incompatible with land uses within the viewshed for sensitive viewers ▪ Introduction of an incompatible visual element visible from a sensitive viewing location ▪ Introduction of elements that would be inconsistent with the surrounding visual character in a historic district, specific plan area, or other area that is designated in a policy document or is otherwise identified as being important visually ▪ Alteration of lighting, shade, or shadow conditions in areas sensitive to such changes ▪ Substantial alterarion of views from a scenic highway or roadway
Remove important visual elements	▪ Potential for the project to remove important features, such as important buildings, land forms, vegetation, or other scenic resources ▪ Removal of visual elements such as landscaping, hardscaping, or other features that are included in a specific plan, design guidelines, streetscape plan, or other policy document, would preclude similar planned elements from being installed, or would fail to include such elements in its design
Block important views	▪ Potential for the project elements, such as land form changes and structures to block important features, such as important buildings, land forms, vegetation, or other scenic resources ▪ Block, screen, obstruct, or otherwise interfere with views of an important visual landmark, including properties on or eligible for the National Register of Historic Places, properties that contribute to a historic district or cited in local historic registers, general plans, or other policy documents, or properties specifically designed to take advantage of existing views ▪ Substantially screen or block views of commercial land uses (or their signage) from the adjacent roadways, when that land use is dependent upon their visibility for customers

D. MITIGATION

The Section and Program Management Environmental Teams will:

- Review mitigation strategies described in the CEQA Findings of Fact (November 2005) and the Record of Decision (November 18, 2005) for the Statewide Program EIR/EIS and develop project-level measures consistent with strategies to avoid or minimize impacts. Also review the same documents for the Bay Area to Central Valley EIR/EIS.
- Identify and evaluate site-specific feasible and practicable mitigation measures to be incorporated into project design to avoid or reduce significant impacts to aesthetics and visual quality (state which alternative requires mitigation or if the measures are applicable to all) (consult with PM Team about feasibility of mitigation)
- Consider such mitigation as changes in the project (location, construction method, or surface treatments), additional or changed landscaping, screening of views, enhancement of views, shielding of lights (in accordance with the International Dark Sky Association standards), noise wall treatments, rock aging techniques, artwork, special design features, temporary screening of construction areas and/or staging areas, etc.
- Using the same methodology as for project impacts, evaluate whether visual quality impacts with mitigation would occur, considering changes in visual character, changes in visual quality, and viewer group response at each viewpoint for each project alternative when compared to the existing (baseline) condition
- Determine the significance of the impacts after mitigation (expressed as no impact, less-than-significant impact, or significant impact) when considering the thresholds of significance

E. CUMULATIVE

See the Caltrans Cumulative Impact Assessment Guidance, which is applicable to non-highway projects: (http://www.dot.ca.gov/ser/cumulative_guidance/approach.htm). The following steps serve as guidelines for identifying and assessing cumulative impacts:

1. Determine if a cumulative impact analysis will be required for aesthetics and visual quality
   - Prior to conducting the analysis of the project, coordinate with the Program Management Team and Section Environmental Team Cumulative Lead to determine whether aesthetics and visual quality will be considered in the cumulative impact analysis. This process is initiated during project scoping and continues throughout the NEPA/CEQA analysis. Assume cumulative impact analysis will be required for any impacts even if these impacts are small or are mitigated to a less than significant level. Only resources with no or beneficial impacts (before or after mitigation) will not be required to be included in the cumulative impact analysis.
2. Define the geographic boundary or Resource Study Area (RSA) for each resource to be addressed in the cumulative impact analysis. This may result in more than one RSA per resource (e.g., for biology you may have more than one habitat or species RSA; for air quality you may have a CO impact with a small RSA or a basinwide RSA for other impacts). Do not make arbitrary decisions about the boundary of the RSA; you should be able to explain why the boundary was chosen based on environmental characteristics.
   - Submit RSA(s) to the Section Environmental Team Cumulative Lead
3. Determine method for cumulative impact analysis
   - Coordinate with the Section Environmental Team Cumulative Lead on the method of analysis (project list and/or plan). In general a project list approach will be taken in conducting the

cumulative impact analysis, however for some topics a plan or combined approach may be necessary (e.g., air, transportation, and land use).

4. Determine list of past, present, and reasonably foreseeable projects to include in the cumulative impact analysis (if using project list method) or appropriate plan(s) (if using plan method)
   - The Section Environmental Team Cumulative Lead will identify what projects or plans will be used in the analysis. If the analysis is to use a project list approach, the Section Environmental Team Cumulative Lead will provide the Resource Specialist with the database of information for those projects. In some cases the Section Environmental Team Cumulative Lead will coordinate with the Resource Specialists to determine what assumptions will be made in the cumulative impact analysis to account for unknown impacts of future projects (such as for projects in the early planning stages or without a certified environmental document).
5. Describe the current health and the historical context of each resource (http://www.dot.ca.gov/ser/cumulative_guidance/approach.htm)
6. Identify cumulative impacts
   - Identify if there is a significant cumulative impact without the project
   - Identify the direct and indirect impacts of the proposed HST project that might contribute to a cumulative impact on the identified resources (this is information that should come from the impact analysis of the proposed HST project). The Resource Specialist will determine if the project contributes to an existing significant cumulative impact or result in a new cumulative impact when the project's impacts are added to the previously less than significant impacts of the other projects (i.e., one that tips the scales from less than significant to significant cumulative impact).
   - Based on the list of past, present, and reasonably foreseeable projects and the impacts of those projects and the direct and indirect impacts described above for the proposed HST project, or on analysis of the project in relation to existing plans, assess the potential cumulative impacts and state whether the project's contribution to a cumulative impact is "cumulatively considerable" as defined in Guidelines 15065(a)(3).
   - Identify mitigation for significant cumulative impacts. Coordinate with the Section Environmental Team Cumulative Lead (http://www.dot.ca.gov/ser/cumulative_guidance/approach.htm)
7. Document results
   - Summarize the results of the cumulative impact analysis for aesthetics and visual quality. This summary should include the identification of resources considered in the analysis, the RSA(s) for each resource, the conclusions concerning the health and historical context of understanding the resource; the proposed project impacts that might contribute to a cumulative impact, and the conclusions of the analysis. The Section Environmental Team Cumulative Lead will describe the other reasonably foreseeable actions considered in the cumulative impact analysis as part of the Cumulative Impacts section of the EIR/EIS.

3.16.4 Products

A. TECHNICAL REPORT

1. Aesthetics and Visual Quality Report

B. PROJECT EIR/EIS

1. Summary/Table for EIR/EIS Executive Summary
2. Section: Aesthetics and Visual Quality
3. Section: Cumulative Impacts

3.17 Cultural Resources

Cultural resources to be evaluated include archaeological, historic, and paleontological resources.

3.17.1 Laws, Regulations, and Orders

Key cultural resources regulations that are most relevant to the proposed project are summarized below.

A. FEDERAL

National Environmental Policy Act (NEPA) [42 U.S.C. Section 4321 et seq.]

NEPA requires the consideration of potential environmental effects, including potential effects to cultural resources, in the evaluation of any proposed federal agency action. This includes consideration of unique characteristics of the geographic area such as proximity to cultural resources and the degree to which the action may adversely affect buildings, structures, districts, sites, or objects listed in or eligible for listing in the National Register of Historic Places (NRHP).

The NEPA regulations also require that to the fullest extent possible, agencies prepare draft environmental impact statements concurrently with and integrated with environmental impact analyses and related surveys and studies required by the National Historic Preservation Act (NHPA), which under Section 106 requires federal agencies to consider the effects of their actions on historic properties.

While NEPA does not provide specific guidance regarding paleontological resources, the requirements that the federal agencies take all practicable measures to "preserve important historic, cultural, and natural aspects of our national heritage" is interpreted to apply to paleontological materials, and paleontological resources are treated in a manner similar to that used for cultural resources, but are not subject to Section 106 of the National Historic Preservation Act.

National Historic Preservation Act (NHPA) [16 U.S.C. Section 470 et seq.]

NHPA establishes the federal government policy on historic preservation and the programs – including the National Register of Historic Places (NRHP) – through which this policy is implemented. Under NHPA, significant cultural resources, referred to as historic properties, include any prehistoric or historic district, site, building, structure, or object included in, or eligible for inclusion in, the NRHP. A property is considered historically significant if it meets one of the NRHP criteria and is associated with an important context and retains sufficient historic integrity to convey its significance. This act also established the Advisory Council on Historic Preservation (SCHP), an independent agency that is responsible for implementing Section 106 of NHPA through the development of procedures to protect cultural resources included in, or eligible for inclusion in, the NRHP. Regulations are published in 36 CFR Part 60 and 63, and 36 CFR Park 800.

36 CFR Part 800 Implementing Regulations Section 106 National Historic Preservation Act

Section 106 requires that impacts on historic properties be taken in to consideration in any federal undertaking. The process contains five steps: (1) initiating Section 106 process; (2) identifying historic properties; (3) assessing adverse effects; (4) resolving adverse effects, and (5) implementing the project and any stipulations in an agreement document

Section 106 affords the Advisory Council on Historic Preservation (ACHP) and the State Historic Preservation Officer (SHPO) a reasonable opportunity to comment on any undertaking that would adversely affect historic properties eligible for listing in the NRHP. In addition, Section

101(d)(6)(A) of the NHPA allows properties of traditional religious and cultural importance to a Native American tribe to be determined eligible for inclusions in the NRHP.

U.S. Department of Transportation Act [49 U.S.C. Section 303 Section 4(f)]

The Department of Transportation Act declares that special efforts should be made to preserve the natural beauty of the countryside and public park and recreation lands, wildlife and waterfowl refuges, and historic sites

Section 4(f) of the Department of Transportation Act

Section 4(f) of the Department of Transportation Act stipulates that the Secretary of Transportation shall not approve any federally assisted project that would take land from a historic site of national, state, or local significance unless there is no feasible and prudent alternative, and unless the proposed use includes all possible planning to minimize harm to historic sites resulting from that use. Regulations developed by the Advisory Council on Historic Preservation provide for the coordination of Section 4(f) and NHPA compliance, under 36 Code of Federal Regulations 800. 14.

Archaeological and Historic Preservation Act [16 U.S.C. Sections 469 to 469(c)-2]

The Archaeological and Historic Preservation Act provides for preservation of significant historic or archaeological data, including relics and specimens which may otherwise be irreparably lost or destroyed by construction of a project by a federal agency or under federally licensed activity or program

Archaeological Resources Protection Act (ARPA) [16 U.S.C. Section 470(a)-11]

This act provides for the protection of archaeological resources and sites on public lands and Indian lands, establishes a procedure for the issuance of permits for conducting cultural resources research, and prescribes penalties for unauthorized excavation, removal, damage, alteration, or defacement of archaeological resources

American Indian Religious Freedom Act [42 U.S.C. Section 1996]

American Indian Religious Freedom Act protects and preserves the traditional religious rights and cultural practices of American Indians, Eskimos, Aleuts, and Native Hawaiians. The act requires policies of all governmental agencies to respect the free exercise of Native religion and to accommodate access to and use of religious sites to the extent that the use is practicable and is not inconsistent with an agency's essential functions.

Native American Graves Protection and Repatriation Act [25 U.S.C. Sections 3001 to 3013]

The Native American Graves Protection and Repatriation Act sets provisions for the removal and inadvertent discovery of human remains and other cultural items on federal and tribal lands. The act clarifies the ownership of human remains and sets forth a process for repatriation of human remains and associated funerary objects and sacred religious objects to the Native American tribes or tribes likely to be lineal descendants or culturally affiliated with the discovered remains or objects.

American Antiquities Act [16 U.S.C. Sections 431 to 433]

The American Antiquities Act prohibits appropriation, excavation, injury, or destruction of “any historic or prehistoric ruin or monument, or any object of antiquity” located on lands owned or controlled by federal government. The act also establishes penalties for such actions and sets forth a permit requirement for collection of antiquities on federally owned lands. Objects of antiquity are considered by a number of federal agencies as including fossils.

Paleontological Resources Conservation Act [S. 546, 108th Congress, 1st Session (2003)]

This act protects paleontological resources on federal lands and limits collecting vertebrate fossils and other rare and scientifically significant fossils on those lands to qualified researches with a permit from the appropriate state or federal agency.

Paleontological Resources Preservation Act [16 U.S.C. Sections 6301]

This act aims to manage and protect paleontological resources on federal land, using scientific principles and expertise; and to develop plans for inventorying, monitoring, and deriving the scientific and educational use of such resources.

National Natural Landmarks (NNL) Program

This program encourages the preservation of sites that illustrate the nation's geological and ecological character. Under the NNL Program, sites that represent "best" examples of various types of biological communities or geologic features are listed on the National Registry of National Landmark. The National Park Service administers this program.

B. STATE

California Environmental Quality Act (CEQA) Section 21083.2 and CEQA Guidelines Section 15064.5

CEQA Guidelines Section 15064.5 provides specific guidance for determining the significance of impacts on historic and unique archaeological resources. Under CEQA these resources are called *historical resources* whether they are of historic or prehistoric age. Historical resources are resources that are listed, or eligible for listing, in the California Register of Historical Resources (CRHR), or which are listed in the historical register of a local jurisdiction (county or city). NRHP historic properties located in California are considered historical resources for the purposes of CEQA and are also listed in the CRHR. The CRHR criteria for listing such resources are based on, and are very similar to, the NRHP criteria. CEQA (Public Resources Code) Section 21084.1 requires a finding of significance for substantial adverse changes to historical resources and defines the term "historical resources." CEQA (Public Resources Code) Section 21083.2 and CEQA Guidelines Section 15064.5(c) provide further definitions and guidance for archaeological sites and their treatment.

Section 15064.5 also prescribes a process and procedures for addressing the existence of, or probable likelihood, of Native American human remains, as well as the accidental discovery of any human remains within the project, including consultations with the appropriate Native Americans.

California Register of Historical Resources (PRC Section 5024.1)

Public Resources Code Section 5024.1 establishes the California Register of Historical Resources (CRHR). The register lists all properties considered to be significant historical resources in the state. The CRHR includes all properties listed or determined eligible for listing on the NRHP, including properties evaluated under Section 106. The criteria for listing are similar as those of the NRHP.

California Register of Historical Resources (14 CCR Section 4850)

The California Register of Historical Resources (CRHR) regulations govern the nomination of resources to the CRHR. The regulations set forth the criteria for eligibility, as well as guidelines for assessing historical integrity and resources that have special considerations.

California Native American Graves Protection and Repatriation Act [California Health & Safety Code Section 8010 et seq.]

The California Native American Graves Protection and Repatriation Act establishes a state repatriation policy intent that is consistent with and facilitates implementation of the federal Native American Graves Protection and Repatriation Act. The act strives to ensure that all California Indian human remains and cultural items are treated with dignity and respect, and states an intent for the state to provide mechanisms for aiding California Indian tribes, including non-federally recognized tribes.

C. REGIONAL AND LOCAL REGULATORY FRAMEWORK

- General Plan Policies
- Historic Preservation, Land Use, or similar elements (these would be part of the General Plan)
- Zoning Ordinances and Codes
- Comprehensive Plans, Specific Plans
  - Documents, landmark registers, historic resources survey documents, and maps provided by City and County planning departments

3.17.2 Affected Environment

A. DEFINITION OF ARCHAEOLOGY AND HISTORIC PROPERTIES STUDY AREAS

Sources of Information	Resource Study Area
▪ Conceptual engineering plans and profiles ▪ Project description	▪ Archaeological Area of Potential Effects (APE) will be established in consultation with the SHPO and will be consistent with the Programmatic Agreement (PA) for the entire High Speed Train Project o Proposed project's delineated limits of disturbance with the widest or largest alternative footprint within the alignment corridor (horizontal APE) and 100 feet below grade in areas where boring will occur for the installation of aerial platform columns and the tunnel options (vertical APE). ▪ Built environmental Area of Potential Effects (APE) for historic architectural resources will be established in consultation with the SHPO and consistent with the Programmatic Agreement (PA) for the entire High Speed Train Project. o The APE study area will include all buildings, structures, objects, and districts within the limits of disturbance and the first tier of parcels adjacent to the alignment rights-of-way, stations, open cut construction areas, grade separations, tunnel segments, and areas proposed for acquisition, as well as within a reasonable view shed of project-related aerial structures. ▪ An APE showing the most current engineering available for the project and the APE boundary will be delineated on an aerial base map at a scale of 1"=250' in urban areas and 1"=400' in rural areas with at-grade, elevated, or in tunnel configurations noted. ▪ APA will also include location of cultural

Sources of Information	Resource Study Area
	significance (e.g., traditional herb-gathering location), if any within its boundary

Archaeological Properties, including Ethnographic and Multi-Component Cultural Resources

Key Steps	Sources of Information
▪ Assess project's potential to affect cultural resources including: o Archaeology - prehistoric and historical archaeological sites, historic architectural properties (including adjacent properties along alignment alternatives and around facilities) and isolated artifacts and features o Traditional Cultural Properties (TCPs) – resources of importance to Native Americans and other ethnic groups ▪ Determine site-specific regulatory requirements based on land ownership, local or regional regulatory requirements, federal or state permits, and requirements for other agreements, such as easements or land acquisition ▪ Identify all potential parties (signatories and interested parties) to the Section 106 process including federal and state land owning or permitting agencies and Native American tribes ▪ Consult federal agencies with jurisdiction, for example: U.S. Forest Service, BLM, or FHWA (Caltrans), to determine special requirements and permits, as needed. Consider if any federal or state Programmatic Agreements (PAs) and Memoranda of Agreement/Understanding (MOA/MOUs) exist between agencies that may affect historic properties. Agency consultation efforts will be consistent to the California High Speed Train Agency Involvement Plan. ▪ Review the regulatory requirements of Section 106 of the National Historic Preservation Act (NHPA) and the California Public Resources Code Sections 5024.1 and 21084.1 ▪ Review all maps, drawings, photographs, and related materials outlining the extent of the project including stations, track, equipment storage areas, temporary construction easements and so forth ▪ Review Program EIR/EIS for known culturally sensitive areas, project-specific identification and evaluation requirements, and mitigation strategies that were previously identified ▪ Review existing studies, documentation, and consultation records from the Program EIR/EIS	▪ Conceptual engineering plans and profiles at an appropriate scale to show project alignment, ancillary facilities, and temporary construction easements ▪ Contextual photographs, maps and related materials. ▪ Information contained at the Regional Centers of the California Historical Resources Information System, as well as local historical societies, libraries, and other historic resources repositories. ▪ Section 106 of the National Historic Preservation Act (NHPA) and the California Public Resources Code Sections 5024.1 and 21084.1 ▪ Native American Heritage Commission (NAHC), Sacred Lands Files ▪ Program EIR/EIS ▪ Environmental documents within study area ▪ National Register of Historic Places ▪ California Register of Historic Resources ▪ City and/or County historic registers or landmark lists ▪ Local jurisdiction General Plans, Preservation Elements, Specific Plans, Ordinances, and other preservation policies and regulations

Key Steps	Sources of Information
and decision documents or Programmatic Agreements or Memorandum of Agreements between the Authority/FRA and the State Historic Preservation Officer (SHPO) and any applicable technical studies related to the project ▪ Review previous technical documents and recent environmental documents for other projects in the study area (APE) to determine previous levels of study; agency involvement and individuals/groups contacted; applicable laws, ordinances, and regulations; methodologies; historic themes and contexts; data results; affected resources; types of impacts; and proposed mitigation measures. ▪ ▪ In compliance with Section 106 of the NHPA [36 CFR 800], initiate consultation with the California SHPO to define the area of potential effect (APE) and obtain agreement on level of effort for resource identification and evaluation ▪ Initiate consultation with potentially interested parties including Native American tribes and groups, other ethnic groups, historical societies, local landmarks boards, as appropriate for each project ▪ If the project crosses land owned by federally recognized Native American tribes, the FRA will consult with these tribes as outlined by Section 106. If the federally recognized tribes have a Tribal Historic Preservation Officer (THPO) the FRA will initiate consultation with the THPO. ▪ For federally recognized tribes with an interest in the project but where there is no tribal land, FRA will consult with Native tribes regarding the locations or concerns about archaeological resources and traditional cultural properties ▪ To identify non-federally recognized Native American groups and individuals who might have knowledge or concerns about resources that could be affected by the project, contact the Native American Heritage Commission (NAHC) to request a search of their Sacred Lands Files and to obtain a list of Native American contacts for each project	

Historic Architectural Properties

Key Steps	Sources of Information
▪ Review the regulatory requirements of Section 106 of the National Historic Preservation Act (NHPA) and the California Public Resources Code Sections 5024.1 and 21084.1 ▪ Review all maps, drawings, photographs, and	▪ Conceptual engineering plans and profiles at an appropriate scale to show project alignment, ancillary facilities, temporary construction easements, etc ▪ Contextual photographs, maps and related

Key Steps	Sources of Information
related materials showing the extent of the project including stations, track, equipment storage areas, temporary construction easements and so forth ▪ Review Program EIR/EIS for known historic architectural sensitive areas, project-specific identification and evaluation requirements, and mitigation strategies that were previously identified ▪ Review existing studies, documentation, and consultation records from the Program EIR/EIS and decision documents or Programmatic Agreements or Memorandum of Agreements between the Authority/FRA and the State Historic Preservation Officer (SHPO) and any applicable technical studies related to the project ▪ Review previous technical documents and recent environmental documents for other projects in the study area (APE) to determine previous levels of study; agency involvement and individuals/groups contacted; applicable laws, ordinances, and regulations; methodologies; historic themes and contexts; data results; affected resources; types of impacts; and proposed mitigation measures. ▪ Assess project's potential to affect historic architectural properties including: o Buildings, structures, objects, sites, and districts. ▪ Determine project-specific regulatory requirements based on land ownership, local or regional regulatory requirements, federal or state permits, and requirements for other agreements, such as easements or land acquisition ▪ Identify all potential parties (signatories and interested parties) to the Section 106 process including federal and state land owning or permitting agencies and local landmarks boards or commissions ▪ Initiate consultation with potentially interested parties including historical societies, preservation groups, local landmark boards and commissions, as appropriate for each project ▪ Consult with federal agencies, including U.S. Forest Service, BLM, and FHWA (Caltrans) to determine special requirements and permits, as needed. Consider if any federal or state Programmatic Agreements (PAs) and Memoranda of Agreement/Understanding (MOA/MOUs) exist between agencies that may affect historic properties. Agency consultation efforts will be consistent to the California High Speed Train Agency Involvement Plan. ▪ In compliance with Section 106 of the NHPA, initiate consultation with the California SHPO to	materials ▪ Information contained at the Regional Centers of the California Historical Resources Information System as well as local historical societies, libraries, and other historic resources repositories ▪ Section 106 of the National Historic Preservation Act (NHPA) and the California Public Resources Code Sections 5024.1 and 21084.1 ▪ Program EIR/EIS ▪ Environmental documents within study area ▪ County Assessor building construction data ▪ City and/or County building permit records ▪ City and/or County historic registers or landmark lists ▪ Caltrans Historic Bridge Inventory ▪ Information available from the railroad historian/historic files ▪ National Register of Historic Places ▪ California Register of Historical Resources ▪ Local jurisdiction General Plans, Preservation Elements, Specific Plans, Ordinances, and other preservation policies and regulations

Key Steps	Sources of Information
define the area of potential effects (APE) and obtain agreement on level of effort for resource identification and evaluation	

The following methodology is to identify and evaluate historic properties pursuant to the Programmatic Agreement (PA):

In consultation with the SHPO and other interested parties to the Section 106 process, implement the resource identification and evaluation process outlined by Section 106 of the NHPA [36 CFR Part 800] following guidance developed by the National Park Service and in conformance with the Secretary of the Interior's Standards and Guidelines for Archaeology and Historic Preservation 1983 (48 FR 44716, as amended).

- Conduct Background Research
  - To identify known locations of archaeological and historic properties as defined by NHPA within the APE, review the records for previously recorded archaeological sites and historic buildings at the local Information Center (IC) of the California Historical Resources Information System (CHRIS). While at the IC, collect information on recorded sites within the APE, for the range of alternative HST project alignments, right-of-ways, dumping and borrow pits, access roads and staging areas. Review previous survey technical reports conducted within APE for historic contexts, bibliography, and determinations of significance of sites. Review historic USGS maps. Review forms and records of properties listed in the National Register of Historic Places and the California Register of Historical Resources, the California Historical Landmarks and Points of Historical Interest lists, Land Grant maps, Online Archive of California, Government Land Office Plat Maps, local landmarks lists and/or historic registers, and Sanborn Fire Insurance Maps for urban areas as appropriate.
  - Review survey findings conducted by local governments, historical societies, or historic preservation organizations, local historical landmark or monument designations, and any other inventories that may help identify or establish the significance of historic properties
  - Review subdivision maps, assessor maps, county/city directories, utility records, building permits, photographs, newspapers, diaries/journals, architectural drawings, Agency Records, Residential- and Commercial-Building Records, oral histories, thesis/dissertations, and preferred local and credible history studies. Research should be conducted with the appropriate agencies, knowledgeable individuals, local and regional historical societies, archives, and libraries
  - Develop relevant historic themes and contexts for the identification and evaluation efforts within the APE. Use National Register Bulletin No. 15 for guidance.
- Prepare Archaeological Property Inventory and Evaluation Methodology
  - Based on the background research and previous studies, prepare an inventory and evaluation plan including a research design. Consult with SHPO and other appropriate parties regarding the proposed methodology to identify archaeological properties.
- Implement Archaeological Property Inventory and Evaluation Methodology
  - Employ standard archaeological inventory methods as outlined in the methodology. Conduct presence/absence testing, if necessary, in areas where subsurface remains may be present. For resources that cannot be avoided conduct test excavations to determine resource significance in accordance with the research design.

  - Following the methods outlined in the National Register Bulletin 38, identify and evaluate any potential TCPs and cultural landscapes that could be affected by the project

- Prepare Historic Architectural Property Inventory and Evaluation Methodology
  - This methodology will outline the relevant historic themes and contexts for the identification and evaluation efforts within the APE. Understanding the themes and context of an area or resource-type will aid in determining the eligibility of a property. National Register Bulletin No. 15 provides guidance on the development of historic themes and contexts for historical property research. This methodology will be used to consult with SHPO and other appropriate parties regarding the strategy to identify historic architectural properties in the APE.

- Implement Historic Architectural Property Inventory and Evaluation Methodology
  - Perform an intensive survey to identify, record, and evaluate architectural properties adjacent to the proposed alignment, stations and support facilities built within the time period identified in the plan to document and inventory all historic buildings, structures, objects, districts, and cultural landscapes in sufficient detail to permit evaluation for the NRHP (per Section 106 of the NHPA) and the California Register of Historic Resources (CRHR) (per California Public Resources Code Section 5024.1 and 21084.1). Use field maps at 1" = 250' scale that have delineated parcel boundaries, APE boundaries, Assessor Parcel Numbers (APNs), street names, prominent natural and man-made features, and previously recorded sites. Based on the number of historic properties within the APE, a field database may be required. Documentation and evaluation efforts will follow the guidelines of National Register Bulletin No. 15 and the California Office of Historic Preservation (OHP) Instructions for Recording Historic Properties (DPR 523 series forms). Private spaces (i.e., building interiors), suburban backyards, and restricted areas will not be surveyed. Surveys will occur from public vantage points, and if access is infeasible, then the property will be evaluated solely on available information or right-of-entry will be coordinated by the Agency.

- Prepare Historic Property Inventory and Evaluation Technical Reports (Historic Property Survey Report (HPSR), Archeological Survey Report (ASR), and Historic Architectural Property Report (HASR))
  - After completion of the archaeological and historic architectural research, inventories and evaluations, prepare reports to document the findings and identification efforts, and if any historic properties are identified for the project pursuant to the format stipulated in the programmatic agreement

- Obtain Concurrence from SHPO and Other Parties on Significance of Properties
  - Submit the technical reports to the SHPO and other reviewing agencies and interested parties to obtain concurrence of the significance of identified historic properties in accordance with Section 106 (36 CFR 800.2(c)(3) through (5) and 800.3(f)

  - Assess Adverse Effects of the Project on Identified Historic Properties

  - Using Section 106 criteria of adverse effects and CEQA impact criteria as well as considering local impacts criteria, if any, assess the direct or indirect effects of the project to archaeological and historic architectural properties located within the APE, including those properties reported in the HPSR. Pursuant to the PA, for Section 106 compliance prepare a Findings of Effect (FOE) report that describes the assessment of project-related potential adverse effects to NRHP listed or eligible historic properties and includes mitigation measures that would eliminate or minimize effects of the projects to those properties. The lead agency shall distribute the FOE report to the SHPO and other reviewing agencies and interested

parties for their review and comment. The final FOE report will be submitted to SHPO for final review and concurrence by the lead agency.

- Discuss consultation efforts about effects and mitigation with federal, state, and local government agencies, and other interested parties. Identify any parties who would be consulting parties in the subsequent memorandum of agreement (MOA).

- Develop Project-level Memorandum of Agreement document to Resolve Adverse Effects
  - In consultation with the SHPO and other reviewing agencies and interested parties, utilize the mitigation measures presented in the FOE report to form the basis for the stipulations in the MOA. A draft and final MOA will be prepared and submitted to the SHPO, other reviewing agencies and interested parties for their comment and concurrence.

3.17.3 Impact Analysis and Mitigation Strategies Methodology for for Archaeology and Historic Properties

A. Pursuant to the PA:

- Assess Adverse Effects of the Project on Identified Historic Properties

- Using Section 106 criteria of adverse effects and CEQA impact criteria as well as considering local impacts criteria, if any, assess the direct or indirect effects of the project to archaeological and historic architectural properties located within the APE, including those properties reported in the HPSR. Pursuant to the PA, for Section 106 compliance prepare a Findings of Effect (FOE) report that describes the assessment of project-related potential adverse effects to NRHP listed or eligible historic properties and includes mitigation measures that would eliminate or minimize effects of the projects to those properties. The lead agency shall distribute the FOE report to the SHPO and other reviewing agencies and interested parties for their review and comment. The final FOE report will be submitted to SHPO for final review and concurrence by the lead agency.

- Coordinate Section 106 Findings

  Upon review, concurrence, and execution of the MOA with the SHPO and other parties or simultaneously with final SHPO and other parties consultation on the MOA, incorporate the results of the Section 106 efforts with the NEPA/CEQA process so that the EIR/EIS is consistent with the stipulated mitigation measures outlined in the executed MOA and those measures are included in the NEPA Record of Decision (ROD).

- Prepare and Implement Historic Properties Treatment Plan for Adversely Affected Properties
  - Upon completion of the identification and evaluation of historic properties, a treatment plan will be prepared pursuant to the PA to address adversely affected historic property(ies) and set forth applicable mitigate measures in consultation with the SHPO, appropriate agencies and other MOA signatories. The concerns of the consulting parties shall also be considered in determining the measures to be implemented.

  - The treatment plan will include, but not be limited to, the content and format outlined in the PA.

B. SIGNIFICANCE CRITERIA

Pursuant to NEPA, in considering whether an action may "significantly affect the quality of the human environment," an agency must consider, among other things the unique characteristics of the geographic

area such as proximity to historic or cultural resources (40 CFR 1508.27(b)(3)), and the degree to which the action may adversely affect districts, sites, highways, structures, or objects listed in or eligible for listing in the National Register of Historic Places or may cause loss or destruction of significant scientific, cultural, or historical resources (40 CFR 1508.27(b)(8)).

Under Section 106 of the National Historic Preservation Act, an adverse effect occurs when a project may alter, directly or indirectly, the characteristics of a historic property that qualify it for inclusion in or eligibility for the National Register of Historic Places. This includes effects that diminish the integrity of a historic property's location, design, setting, materials, workmanship, feeling, or association.

Based on State CEQA Guidelines, the project would result in a significant impact on cultural and paleontological resources if it would:

- Cause a substantial adverse change in the significance of a historical resource as defined in Section 15064.5.
- Cause a substantial adverse change in the significance of an archaeological resource pursuant to Section 15064.5.
- Directly or indirectly destroy a unique paleontological resource or site or unique geologic feature.
- Disturb any human remains, including those interred outside of formal cemeteries.

State CEQA Guidelines use the following definitions to analyze impacts on historical or archaeological resources:

- Substantial adverse change in the significance of a historical resource means physical demolition, destruction, relocation, or alteration of the resource or its immediate surroundings such that the significance of a historical resource would be materially impaired (Section 15064.5[b][1])
- The significance of a historical resource would be materially impaired when a project demolishes or materially alters in an adverse manner those physical characteristics that convey its historic significance or justify its eligibility for inclusion in or eligibility for the National Register of Historic Places, California Register of Historic Places, or local registers (Section 15064.5[b][2][A–C])

C. ENVIRONMENTAL CONSEQUENCES

Topic	Issues to Evaluate
Archaeological Properties	▪ Identify any prehistoric and historic archaeological sites (including impacts to human remains); and determine whether project will adversely affect them using state and federal criteria ▪ Determine if an adverse effect or substantial adverse change occurs
Historic Architectural Properties	▪ Identify any historic structures, buildings, objects, sites, and districts; and determine whether project will adversely affect them using state and federal criteria ▪ Determine if an adverse effect or substantial adverse change occurs
Ethnographic Resources	▪ Identify ethnographic resources and determine whether project will adversely effect them using state and federal criteria ▪ Determine if an adverse effect or substantial adverse change occurs

Topic	Issues to Evaluate
Multi-Component Cultural Resources	▪ Identify multicomponent cultural resources and determine whether project will adversely affect them using state and federal criteria ▪ Determine if an adverse effect or substantial adverse change occurs
Eligibility for NRHP and historical resources under CEQA	All cultural resources evaluated for eligibility for the NRHP and as historical resources under CEQA: If these resources are not eligible for the NRHP or as a historical resource under CEQA, then there will be no need to consider adverse effects or substantial adverse changes (e.g. if there is a historic building that is not eligible for the NRHP and is not a historical resource under CEQA, then the project will not have any effect to the building that need to be considered under NHPA/NEPA/CEQA). ▪ Otherwise, determine if an adverse effect or substantial adverse change occurs

NOTE: As described in the Laws, Regulations, and Orders discussion, the basis for determining impacts under CEQA is different from that of NEPA. Under CEQA, the impacts of a proposed project and alternatives are measured against the "environmental baseline," which is normally the physical conditions that existed at the time the Notice of Preparation was published. As such, the CEQA analysis in this EIS/EIR uses the environmental baseline, or in some cases an adjusted environmental baseline," as the basis by which to measure and evaluate the impacts of each alternative. Under NEPA, the impacts of each action alternative are measured against the conditions that would otherwise occur in the future if no action were to occur. As such, the NEPA analysis in this EIS/EIR uses the No Project Alternative as the basis by which to measure and evaluate the impacts to each build alternative in the future. Based on this fundamental difference in the approach to evaluating impacts, the nature and significance of impacts determined under CEQA are not necessarily representative of, or applicable to, impacts determined under NEPA.

D. PALEONTOLOGICAL RESOURCES

Key Steps	Sources of Information
▪ Identify/discuss paleontological resources within project alignment and laydown areas. Include information for surface-exposed geologic units as well as those present in subsurface and potentially affected by earthwork and/or tunneling. ▪ Evaluate sensitivity of each unit, using SVP methods/criteria (Society of Vertebrate Paleontology Conformable Impact Mitigation Guidelines Committee 1995)	▪ Geologic and paleontologic literature ▪ Published and project-specific geologic mapping ▪ Museum databases o PaleoPortal o UC Berkeley Museum of Paleontology o Los Angeles County Museum of Natural History ▪ SVP methods as presented in SVPCIMGC 1995 ▪ Environmental documents within project region

- Qualitatively analyze impacts on paleontological resources based on professional judgment consistent with the methods recommended by the Society of Vertebrate Paleontology (SVP) (Society of Vertebrate Paleontology Conformable Impact Mitigation Guidelines Committee, 1995)

Because many fossil materials are buried in subsurface geologic units rather than exposed at the ground surface, a lead agency often cannot be certain whether any such resources will actually be encountered until project earthwork has made substantial progress. Thus, impact analysis for paleontological resources operates based on probabilities of impact, with the goal of developing flexible strategies to support adaptive management based on information that may quite literally "come to light" during project construction. Given these uncertainties, the SVP guidelines delineate a two-phase process, as follows:

- Assess the likelihood that the project's RSA contains significant nonrenewable paleontological resources that could be directly or indirectly impacted, damaged, or destroyed as a result of the project. This is referred to as an area's *paleontological sensitivity* or *sensitivity for paleontological resources*.
- Based on the identified degree of sensitivity, formulate and implement measures to mitigate potential adverse impacts

Table below defines the SVP's sensitivity categories for paleontological resources and summarizes recommended treatments to avoid adverse impacts in each sensitivity category.

Society of Vertebrate Paleontology's Recommended Treatment for Paleontological Resources, by Sensitivity Category

Sensitivity Category	Definition	Recommended Treatment
High potential (High sensitivity)	Areas underlain by geologic units from which vertebrate or significant invertebrate fossils or suites of plant fossils have been recovered	▪ Preliminary survey and surface salvage before construction begins ▪ Monitoring and salvage during construction ▪ Specimen preparation; identification, cataloging, curation, and storage of materials recovered ▪ Preparation of final report describing finds and discussing their significance ▪ All work should be supervised by a professional paleontologist who maintains the necessary collecting permits and repository agreements
Undetermined potential (Undetermined sensitivity)	Areas underlain by geologic units for which little information is available	▪ Preliminary field surveys by a qualified vertebrate paleontologist to assess project area's sensitivity ▪ Design and implementation of mitigation if needed, based on results of field survey
Low potential (Low sensitivity)	Areas underlain by geologic units that are not known to have produced a substantial body of significant paleontologic material	▪ Protection and salvage are generally not required. However, a qualified paleontologist should be contacted if fossils are discovered during construction, in order to salvage finds and assess the need for further mitigation
Source: Society of Vertebrate Paleontology Conformable Impact Mitigation Guidelines Committee, 1995.		

As used in this table, the term *significant* refers to paleontological resources that fulfill one or more of the following criteria:

- Provides important information shedding light on evolutionary trends and/or helping to relate living organisms to extinct organisms
- Provides important information regarding the development of biological communities

- Demonstrates unusual circumstances in the history of life
- Represents a rare taxon or a rare or unique occurrence; is in short supply and in danger of being destroyed or depleted
- Has a special and particular quality, such as being the oldest of its type or the best available example of its type
- Provides important information used to correlate strata for which it may be difficult to obtain other types of age dates

In California, paleontological resources that meet these criteria and thus are considered significant include all vertebrate remains as well as some invertebrate and plant fossils.

In the analysis consider whether the impact is a substantial damage to or destruction of significant paleontological resources, as defined by the Society of Vertebrate Paleontology Conformable Impact Mitigation Guidelines Committee (1995).

E. MITIGATION STRATEGIES

The Regional Teams will:

- Review mitigation strategies described in the CEQA Findings of Fact (November 2005) and the Record of Decision (November 18, 2005) for the statewide EIR/EIS Program EIR/EIS and develop project-level measures consistent with strategies to avoid or minimize harm from project-related impacts to historic properties. Also review the same documents for the Bay Area to Central Valley EIR/EIS. Draft a MOA document for the FRA, Authority, SHPO and other signatories parties that identifies site-specific stipulations to mitigate or reduce any adverse impacts to historic properties and incorporate into the project design, as applicable
- Describe/refer to the Historic Properties Treatment Plan for Adversely Affected Properties that will be prepared upon completion of the identification and evaluation of historic properties pursuant to the PA to address adversely affected historic property(ies) and set forth applicable mitigate measures in consultation with the SHPO, appropriate agencies and other MOA signatories. (The concerns of the consulting parties shall also be considered in determining the measures to be implemented. The treatment plan will include, but not be limited to, the content and format outlined in the PA.)
- Identify the CEQA significance level after mitigation [e.g. reduced but still significant/less than significant].

F.CUMULATIVE

See the Caltrans Cumulative Impact Assessment Guidance, which is applicable to non-highway projects: (http://www.dot.ca.gov/ser/cumulative_guidance/approach.htm). The following steps serve as guidelines for identifying and assessing cumulative impacts:

1. Determine if a cumulative impact analysis will be required for Cultural Resources
   - Prior to conducting the analysis of the project, coordinate with the Program Management Team and Section Environmental Team Cumulative Lead to determine if Cultural Resources will be considered in the cumulative impact analysis. This process is initiated during project scoping and continues throughout the NEPA/CEQA analysis. Assume cumulative impact analysis will be required for any impacts even if these impacts are small or are mitigated to a less than significant level. Only resources with no or beneficial impacts (before or after mitigation) will not be required to be included in the cumulative impact analysis.

2. Define the geographic boundary or Resource Study Area (RSA) for each resource to be addressed in the cumulative impact analysis. This may result in more than one RSA per resource (e.g., for biology you may have more than one habitat or species RSA; for air quality you may have a CO impact with a small RSA or a basinwide RSA for other impacts). Do not make arbitrary decisions about the boundary of the RSA; you should be able to explain why the boundary was chosen based on environmental characteristics.
   - Submit RSA(s) to the Section Environmental Team Cumulative Lead

3. Determine method for cumulative impact analysis
   - Coordinate with the Section Environmental Team Cumulative Lead on the method of analysis (project list and/or plan). In general a project list approach will be taken in conducting the cumulative impact analysis, however for some topics a plan or combined approach may be necessary (e.g., air, transportation, and land use).

4. Determine list of past, present, and reasonably foreseeable projects to include in the cumulative impact analysis (if using project list method) or appropriate plan(s) (if using plan method)
   - The Section Environmental Team Cumulative Lead will identify what projects or plans will be used in the analysis. If the analysis is to use a project list approach, the Section Environmental Team Cumulative Lead will provide the Resource Specialist with the database of information for those projects. In some cases the Section Environmental Team Cumulative Lead will coordinate with the Resource Specialists to determine what assumptions will be made in the cumulative impact analysis to account for unknown impacts of future projects (such as for projects in the early planning stages or without a certified environmental document).

5. Describe the current health and the historical context of each resource (see http://www.dot.ca.gov/ser/cumulative_guidance/approach.htm)

6. Identify cumulative impacts
   - Identify if there is a significant cumulative impact without the project
   - Identify the direct and indirect impacts of the proposed HST project that might contribute to a cumulative impact on the identified resources (this is information that should come from the impact analysis of the proposed HST project). The Resource Specialist will determine if the project contributes to an existing significant cumulative impact – or – result in a new cumulative impact when the project's impacts are added to the previously less than significant impacts of the other projects (i.e., one that tips the scales from less than significant to significant cumulative impact).
   - Based on the list of past, present, and reasonably foreseeable projects and the impacts of those projects and the direct and indirect impacts described above for the proposed HST project, or on analysis of the project in relation to existing plans, assess the potential cumulative impacts and state whether the project's contribution to a cumulative impact is "cumulatively considerable" as defined in Guidelines 15065(a)(3).

7. Identify mitigation for significant cumulative impacts. Coordinate with the Section Environmental Team Cumulative Lead (also see http://www.dot.ca.gov/ser/cumulative_guidance/approach.htm)

8. Document results
   - Summarize the results of the cumulative impact analysis for Cultural Resources. This summary should include the identification of resources considered in the analysis, the RSA(s) for each resource, the conclusions concerning the health and historical context of understanding the resource; the proposed project impacts that might contribute to a cumulative impact, and the conclusions of the analysis. The Section Environmental Team Cumulative Lead will describe the other reasonably foreseeable actions considered in the cumulative impact analysis as part of the Cumulative Impacts section of the EIR/EIS.

3.17.4 Products

A. TECHNICAL REPORTS

1. Historic Property Survey Report (HPSR)
2. Archaeological Survey Report (ASR)
3. Historic Architectural Survey Report (HASR)
4. Finding of Effect Report (FOE)
5. Memorandum of Agreement Document (MOA)
6. Historic Property Treatment Plan, if necessary
7. Paleontological Reports

Compile the above technical reports so that they comply with the Section 106 process and are prepared in accordance with the Secretary of the Interior's Standards and Guidelines for Archaeology and Historic Preservation (Standards and Guidelines) (48 CFR 44716-44742) and 36 CFR 800.4. The content and format of each technical report is outlined in Attachment C (HST Program Documentation and Format Guidelines) of the Programmatic Agreement for the larger HST Project. In addition, prepare appropriate maps, figures, database, and DPR 523 forms to help illustrate the survey data results and understand the extent and relevance of the project to historic properties, as stipulated in the PA.

1. PROJECT EIR/EIS

1. Summary for EIR/EIS Executive Summary
2. Section: Cultural Resources
3. Section: Cumulative Impacts

3.18 Regional Growth

3.18.1 Laws, Regulations, and Orders

A. FEDERAL

National Environmental Policy Act (NEPA) [42 U.S.C. Section 4321 et seq.]

NEPA requires the consideration of potential environmental consequences in the evaluation of any proposed Federal agency action. This includes a requirement to examine both direct and indirect consequences, which may occur in the areas beyond the immediate influence of a proposed action and at some time in the future. General NEPA procedures are set forth in the Council on Environmental Quality (CEQ) regulations 23 CFR 771.

Direct growth effects are those caused by the proposed action, occurring at the same time and place (40 CFR 1508.8). Direct growth effects include permanent jobs directly associated with the project as well as any displacement of housing related to the construction and operation of the proposed High- Speed Train project.

Indirect growth effects are those considered to be reasonably forseeable effects caused by the proposed action, typically occurring later in time or further from distance from the project (40 CFR 1502.15(b)). These include beneficial or adverse growth in population numbers and/or patterns, and beneficial or adverse growth in regional economic vitality. Removal of existing obstacles to growth is also considered an indirect growth effect. "Removal of obstacles to growth" includes the extension of public services and utilities to a previously undeveloped area, where the provision of such services could have a forseeable increase in population and/or economic growth.

B. STATE

California Environmental Quality Act Guidelines [Section 15126.2(d)]

CEQA Guidelines Section 15126.2(d) requires a discussion of "ways in which the project could foster economic or population growth, or the construction of additional housing, either directly or indirectly, in the surrounding environment," including the project's potential to remove obstacles to population growth, and encouragement and facilitation of other activities that could significantly affect the environment. For example, the extension of infrastructure may encourage or facilitate other activities resulting in a foreseeable increase in population and/or economic growth.

C. REGIONAL REGULATORY FRAMEWORK

- Regional Growth Forecasts
- Regional Growth Management Plans

3.18.2 Affected Environment

A. DEFINITION OF RESOURCE STUDY AREA (RSA)

Sources of Information	Resource Study Area

Sources of Information	Resource Study Area
▪ Regional Associations of Governments and Councils of Governments	▪ Region as defined by the applicable Metropolitan Planning Organization (MPO) Association of Governments/ Council of Governments, or an equivalent for areas outside of established Associations of Governments/Council of Governments

Key Steps	Sources of Information
▪ Use Cambridge Systematics Inc. population and employment data for year 2009 (source: Department of Finance). ▪ Describe regional population and employment /unemployment characteristics.	▪ California High Speed Rail County-Level Growth Inducement Projections, Cambridge Systematics, Inc., July 2010.

3.18.3 Impact Analysis and Mitigation Strategies

A. METHODOLOGY GUIDELINES FOR IMPACT ANALYSIS

Overall, this section discusses the potential growth-inducing effects that could result from the project.

Long-term regional growth analysis:

1. Use the year 2035 population and employment projections, i.e. California High Speed Rail County-Level Growth Inducement Projections developed by Cambridge Systematics, Inc.

2. Compare these projections to the year 2035 regional population and employment projections. Do not assume that any difference between these projections are necessarily detrimental, beneficial, or of little significance to the environment. As needed, discuss this issue further with PMT.

3. Address the relationship to, including consistency with and/or furthering the goals and objectives of, regional growth management plans and/or programs.

4. Evaluate both direct and indirect beneficial and/or adverse effects of permanent employment, including employment at the maintenance facilities, on your region.

   In the impact discussion, address the provision of permanent employment opportunities in relation to current employment/unemployment levels, and based on this evaluation determine if: (1) the project is anticipated to have a beneficial effect on regional and county-level employment and growth and, (2) the project would be anticipated not to result or to result in significant permanent relocation of people from outside the region and/or county into the region and/or county.

5. Evaluate beneficial and/or adverse effects of the project on the region's economic vitality.

This analysis focuses on the region-wide effects and considers the potential effects of removing existing obstacles to economic growth. The discussion of the effects should focus on the region, but could extend to a county-level as a smallest unit of analysis as appropriate.

6. The Regional Teams will identify factors to be addressed in the analysis for each of their regions. For example, issues that may include discussing:

- Indirect effects on the region's economy that could result from the provision of the new HST mode. Such changes include both the potential for new businesses/services/economic activity in the region, and for other businesses/services/economic activity locating into the region due to the availability of HST. Such changes also It also includes changes to economy with regards to those businesses/services that serve freeway and airport travelers.
- Indirect effects on potential future farmland conversion due to the economic growth that the project may encourage within the region, including within individual counties, as appropriate to the given HST section.
- Indirect effects, on a regional level, of station-oriented development (SOD) potential based on the analysis conducted in Section 3.13, Station Planning, Land Use, and Development, as it applies to population and employment concentrations.
- Indirect effects on a regional level on demand for housing resulting from increased economic vitality in relation to the regional housing growth forecasts.
- Indirect effects on a regional level of potential property acquisitions, based on the analysis conducted in Section 3.12, Socioeconomics, Communities, and Environmental Justice, as appropriate.

<u>Construction-related employment analysis:</u>

1. Develop construction-related employment estimates for both direct and indirect/induced employment. This can be done using RIMS II multipliers based on capital cost estimates, i.e. Standard Cost Category (SCC) format. Construction-related employment can be presented in terms of person years, which is equivalent to the full-time employment of one person for one year.

   Direct employment is construction-related employment in industries which jobs and services are purchased to build the project. Indirect employment benefits are created by secondary demand for goods and services across a broader spectrum of the economy as a result of the economic multiplier effect of construction.

   Construction of the project will occur over certain number of years, so provide the information about the anticipated time frame, i.e. number of years, in your discussion. Also, the anticipated number of workers to be employed directly by HST project will vary depending on the construction phase, so you can also provide information in terms of a range (example: the anticipated number of workers/number of jobs in person years will vary from approximately XXX to XXX per year), based on available capital expenses/expenditure information from your team's engineers.

2. Address beneficial and/or adverse effects of the provision of construction employment for the region.

   The effects include increased construction-related employment opportunities in the region. Since typically a substantial number of construction jobs is filled from the local construction labor force, such effect would be beneficial on the regional level, as well as on the county-level.

In the impact discussion, address the provision of these employment opportunities in relation to current employment/unemployment levels, and based on this evaluation determine if: (1) the project is anticipated to have a beneficial effect on regional and county-level employment and growth and, (2) the project would be anticipated not to result or to result in significant permanent relocation of construction workers from outside the region and/or county into the region and/or county.

Sources of Information

- California High Speed Rail County-Level Growth Inducement Projections, Cambridge Systematics, Inc., July 2010.
- Next Stop: California. The Benefits of High-Speed Rail Around the World and What's in Store for California. CALPRIG, June 2010.
- The Economic Impacts of High-Speed rail on Cities and their Metropolitan Areas. June 2010. www.usmayors.org/highspeedrail
- Regional Economic Studies at http://www.cahighspeedrail.ca.gov/library
- Bay Area to Central Valley Final Program IR/EIS at http://www.cahighspeedrail.ca.gov/library
- Statewide Program Environmental Reports EIR/EIS at http://www.cahighspeedrail.ca.gov/library

3.18.4 Products

A. PROJECT EIR/EIS

1. Summary/Table for EIR/EIS Executive Summary
2. Section: Regional Growth

3.19 Cumulative Impacts

3.19.1 Laws, Regulations, and Orders

Key regulations addressing cumulative impacts that are most relevant to the proposed project are summarized below.

A. FEDERAL

National Environmental Policy Act (NEPA)

Under NEPA, a cumulative impact is the impact on the environment that results from the incremental impact of the action when added to other past, present, and reasonably foreseeable future actions regardless of what agency (federal or nonfederal) or person undertakes such other actions. Cumulative impacts can result from individually minor but collectively significant actions taking place over a period of time (40 CFR § 1508.7).

A cumulative impact includes the total effect on a natural resource, ecosystem, or human community attributable to past, present, or reasonably foreseeable future activities or actions of federal, nonfederal, public, and private entities. Cumulative impacts also may include the effects of natural processes and events, depending on the specific resource in question. Cumulative impacts include the total of all impacts on a particular resource that have occurred, are occurring, and will likely occur as a result of any action or influence, including the direct and indirect impacts of a federal activity. Accordingly, there may be different levels of cumulative impacts on different environmental resources.

B. STATE

California Environmental Quality Act (CEQA)

Under CEQA, cumulative impacts are defined as two or more individual effects that, when considered together, are considerable or compound or increase other environmental impacts. The cumulative impact from several projects is the change in the environment that results from the incremental impact of the project when added to other closely related past, present, and reasonably foreseeable probable future projects. Cumulative impacts can result from individually minor but collectively significant projects taking place over a period of time (State CEQA Guidelines Section 15355).

C. REGIONAL AND LOCAL REGULATORY FRAMEWORK

- General Plan Policies and Ordinances
  - Transportation, Circulation, Land Use, Growth Management, or similar elements
- Comprehensive Plans, Specific Plans
- Documents and maps provided by City and County planning departments
- Regional transportation, growth, and other plans (for example Southern California Association of Governments (SCAG)) and/or other regional planning documents as appropriate

3.19.2 Methods of Cumulative Impact Analysis

1. Determine if a cumulative impact analysis will be required for specific resources

   Section Environmental Resource Specialists will coordinate with the Program Management Team (PMT) and Section Environmental Team Cumulative Lead to determine what resources will be

considered in the cumulative impact analysis. This process is initiated during project scoping and continues throughout the NEPA/CEQA analysis. Assume cumulative impact analysis will be required for any impacts even if these impacts are small or are mitigated to a less than significant level. Only resources with no or beneficial impacts (before or after mitigation) will not be required to be included in the cumulative impact analysis.

2. Determine method for cumulative impact analysis

   Section Environmental Resource Specialists will coordinate with the Section Environmental Team Cumulative Lead on the method of analysis (project list and/or plan). In general a project list approach will be taken in conducting the cumulative impact analysis, however for some topics a plan or combined approach may be necessary (e.g., air, transportation, and land use).

3.19.3 Resource Study Areas and Cumulative Projects/Growth Forecasts

A. DEFINITION OF RESOURCE STUDY AREA(S)

- There will be a separate study area for each resource (i.e. individual Resource Study Areas [RSAs]), rather than a single consolidated study area for all resources combined. Each regional section's Environmental Team will identify the RSA for each resource.
- Depending on the technical issue, the RSA for cumulative impacts analysis may be broader than the boundary used for analyzing the projects direct impacts
- Section Environmental Resource Specialists will identify the RSA(s) as described in individual methods and coordinate with the Section Environmental Team Cumulative Lead in the identification of projects/plans for the RSA(s)

B. DEFINITION OF CUMULATIVE PROJECTS

1. Section Environmental Team Cumulative Lead will determine list of past, present, and reasonably foreseeable projects to include in the cumulative impact analysis (if using project list method) or appropriate plan(s) (if using plan method)
2. The Section Environmental Team Cumulative Lead will identify what projects or plans will be used in the analysis. If the analysis is to use a project list approach, the Section Environmental Team Cumulative Lead will provide the Resource Specialist with the database of information for those projects. In some cases the Section Environmental Team Cumulative Lead will coordinate with the Resource Specialists to determine what assumptions will be made in the cumulative impact analysis to account for unknown impacts of future impacts (such as for projects in the early planning stages or without a certified environmental document).
   - Sources of information: Regional Transportation Plan (RTP); Regional Transportation Improvement Plan (RTIP); local long-range transportation plan or other local land use plans, general plans, specific plans, conversations/ interviews with local and regional planning agencies; and recent environmental documents for other large-scale project near stations and corridor alternatives.
3. Describe projects included in the list for cumulative analysis (major development projects, major infrastructure projects, highway, transit, airport, rail improvements, projects in the RTP, etc.)
   - Project descriptions (location, size, implementation dates, etc.)
   - Reference sources (environmental documents, etc., from which data is obtained to include in cumulative analysis
   - Explain any projects that are not being included and why

4. Following the Council of Environmental Quality (CEQ) Guidelines, identify other current and reasonably foreseeable future actions or projects and their associated environmental impacts. Reasonable foreseeable future projects are those that are likely to occur in the future and will add to the cumulative impact on a particular resource. Generally, projects will be considered "reasonably foreseeable" if they:
   - Have applications pending with a government agency
   - Are included in an agency's budget or capital improvement program
   - Are foreseeable future phases of existing projects
   - Occur within 20 years of operation of the project.
5. Coordinate with local land use agencies and officials, including the review of adopted plans and similar documents to identify reasonable foreseeable project
   - Survey and consult with local landowners, developers, real estate agencies, or other individuals with special expertise within the proximity of the project study area

3.19.4 Analysis of Cumulative Impacts

The Section Environmental Team Cumulative Lead will use the information developed by the Section Environmental Resource Specialists for each resource section: health and historical context of understanding the resource; the proposed project impacts that might contribute to a cumulative impact by alternative, and the conclusions of the analysis. Mitigation measures will be reviewed and developed with the Section Environmental Team Cumulative Lead.

1. Section Environmental Resource Specialists will describe the current health and the historical context of each resource (see http://www.dot.ca.gov/ser/cumulative_guidance/approach.htm). This will be provided to the Section Environmental Team Cumulative Lead.
2. Identify cumulative impacts
   - The Section Environmental Resource Specialist will provide the impact analysis to the Section Environmental Team Cumulative Lead
   - The Section Environmental Resource Specialist will identify if there is a significant cumulative impact without the project for their resource(s)
   - The Section Environmental Resource Specialist will identify the direct and indirect impacts of the proposed HST project that might contribute to a cumulative impact on the identified resources (this is information that should come from the impact analysis of the proposed HST project). The Resource Specialist will determine if the project contributes to an existing significant cumulative impact – or – result in a new cumulative impact when the project's impacts are added to the previously less than significant impacts of the other projects (i.e., one that tips the scales from less than significant to significant cumulative impact).
   - The Section Environmental Resource Specialist will assess the potential cumulative impacts based on the list of past, present, and reasonably foreseeable projects and the impacts of those projects and the direct and indirect impacts for each resource, or on analysis of the project in relation to existing plans. State whether the project's contribution to a cumulative impact is "cumulatively considerable" as defined in Guidelines 15065(a)(3).
3. Identify mitigation measures for cumulative impacts
   - The Section Environmental Resource Specialist will coordinate with the Section Environmental Team Cumulative Lead in identifying mitigation for significant cumulative impacts. Detailed discussions of mitigation measures in the EIR/EIS should be referenced and appropriately summarized.

4.0 Section 4(f) and Section 6(f) Evaluations

Section 4(f) and Section 6(f) evaluations are requirements of the Department of Transportation Act of 1966 and Land and Water Conservation Fund Act of 1965 respectively. The Program EIR/EIS included a broad and general Section 4(f)/6(f) section. Each project EIR/EIS will identify any Section 4(f) and 6(f) resources in the corridor (based on the Cultural Resources, Parks, Biological Resources and Wetlands, and Land Use Sections of the environmental document), and the Section Environmental Teams will complete detailed Section 4(f) evaluations and initiate the process for securing any needed Section 6(f) conversion approvals. In addition, the analysis will describe prior and on-going efforts (i.e. selection of alternatives) to avoid Section 4(f) and Section 6(f) resources.

4.0.1 Laws, Regulations, and Orders

Key regulations for Section 4(f) and Section 6(f) resources that are most relevant to the proposed project are summarized below.

A. FEDERAL

Section 4(f) of the Department of Transportation Act [DOT Act codified at 23 U.S.C Section 138 and 49 U.S.C. Section 303]

Section 4(f) of the Department of Transportation Act Declares that "it is the policy of the United States government that special effort should be made to preserve the natural beauty of the countryside and public park and recreation lands, wildlife and waterfowl refuges, and historic sites." Specifies that the Secretary may approve a transportation program or project (other than any project for a park road or parkway under Section 204 of Title 23) requiring the use of publicly owned land of a public park, recreation area, or wildlife and waterfowl refuge of national, State, or local significance (as determined by the Federal, State, or local officials having jurisdiction over the park, area, refuge, or site) only if: (1) there is no prudent and feasible alternative to using that land; and (2) the program or project includes all possible planning to minimize harm to the Section 4(f) property resulting from the use.

In addition, 49 U.S.C. 303(d) sets standards for concluding potential *de minimis* impacts for Section 4(f) resources. In general, a *de minimis* impact is a minimal impact to a 4(f) resource that is not considered to be adverse. A *de minimis* impact to historic sites means that no historic property is affected or that there is a "no adverse effect" finding under 36 CFR Part 800. For parks, recreation areas, and wildlife and waterfowl refuges, a *de minimis* impact is an impact that will not adversely affect the qualities or activities that give the property protection under Section 4(f).

Section 6(f) of the Land and Water Conservation Fund Act [16 U.S.C. Section 460l-8(f) and 36 C.F.R. Part 59.1]

State and local governments often obtain grants through the Land and Water Conservation Fund Act to acquire or make improvements to parks and recreation areas. Section 6(f) of the Act prohibits the conversion of property acquired or developed with these grants to a non-recreational purpose without the approval of the U.S. Department of the Interior's (DOI's) National Park Service. Section 6(f) directs DOI to ensure that replacement lands of comparable value and function, or monetary compensation (used to enhance the remaining land), location, and usefulness are provided as conditions to such conversions.

Nationwide Programmatic Section 4(f) Evaluations

The U.S. Department of Transportation has developed five nationwide programmatic evaluations for Section 4(f) that may be used only for projects designed to improve operational characteristics, safety and/or the physical condition of an existing highway on essentially the same alignment (i.e. the 4(f) lands must be located adjacent to the existing highway).

B. REGIONAL AND LOCAL REGULATORY FRAMEWORK

Applicable regional and local regulations, plans and programs will be referenced for the project, including:

- General Plan Policies and Ordinances
  - Parks and Recreation, Open Space, or similar elements
- Comprehensive Plans, Specific Plans
- Documents and maps provided by City and County planning departments
- Adopted policies, plans, or programs supporting development of new public park and recreation lands, wildlife and waterfowl refuges, and historic sites

4.0.2 Identify Section 4(f) Properties and Section 6(f) Properties

A. DEFINITION OF RESOURCE STUDY AREA (RSA)

Sources of Information	Resource Study Area
▪ Conceptual engineering plans and profiles ▪ Project description ▪ Cultural resources identification (cross-reference cultural resources technical reports) ▪ Publicly-owned parks and recreation resources (cross-reference parks, recreation, and open space studies) ▪ Wildlife refuges (cross-reference *Biological Resources and Wetlands Technical Report*) ▪ Noise and vibration impacts to parks and historic resources (cross-reference *Noise and Vibration Technical Report*) ▪ Visual impacts (cross-reference *Aesthetics and Visual Quality Report*) ▪ Potential temporary construction easements ▪ Access to stations, maintenance yards, and other support facilities	▪ 1,000-foot radius around the right-of-way ▪ Conceptual engineering plans and profiles and temporary easements for the alternative alignments ▪ Cross-reference Program EIR/EIS and related technical studies ▪ Refer to the Community Facilities and Services, Cultural Resources, Aesthetics and Visual Quality, Biological Resources and Wetlands, and Noise and Vibration technical reports and sections of the Environmental Impact Report/Environmental Impact Statement (EIR/EIS)

B. METHODOLOGY

- Review information on Section 4(f) and Section 6(f) properties contained in the Statewide Program (Program) EIR/EIS, ROD and CEQA Findings.
- Follow U.S. DOT guidance for preparing Section 4(f) and 6(f) analysis and documentation. (http://environment.fhwa.dot.gov/projdev/impTA6640.asp#f4).

- Review the Section 4(f) Policy Paper, Office of Planning, Environment and Realty, Project Development and Environmental Review (March 2005) (http://environment.fhwa.dot.gov/projdev/4fpolicy.asp).
- Review Caltrans SER Volume 1, Chapter 20-Section 4(f) for application and requirements of Section 4(f).
- Identify Section 4(f) resources within the RSA and determine if Section 6(f) of the Land and Water Conservation Fund Act (L&WCF) applies to any resources by checking the list of grants through the National Park Service and through interviews with the park authority/owner having jurisdiction over the property.
- Coordinate with Public Agencies and Property Owners Regarding Section 4(f) Properties.
- Describe the Section 4(f) and Section 6(f) resources within the RSA [include federal, state, regional and local jurisdictions]: publicly-owned public parks, recreation areas, or wildlife and waterfowl refuges, historic properties listed on or eligible for inclusion on the National Register of Historic Places or California Register of Historic Resources (include only archaeological sites that warrant preservation in place). Create a table listing the location, current ownership, L&WCF Application, National/California Register status, current uses and values.
- Summarize all applicable sections of the EIR/EIS and applicable technical studies that describe the resources.
- Identify agencies with jurisdiction over the resources. If resources potentially used[1] by any alternative under consideration are not described in other sections, the following information should be provided:
  - A detailed map or drawing of sufficient scale to identify the relationship of the alternatives to the Section 4(f) and Section 6(f) property
  - Size (acres or square feet) and location (maps or other exhibits such as photographs) of the affected Section 4(f) and Section 6(f) property
  - Ownership (city, county, State, etc.) and type of Section 4(f) and Section 6(f) property (park, recreation, historic, etc.)
  - Function of or available activities on the property (hiking, pedestrian trails, ball playing, swimming, golfing, etc.)
  - Description and location of all existing and planned facilities (ball diamonds, tennis courts, etc.)
  - Access (pedestrian, vehicular) and usage (approximate number of annual users/visitors, etc.)
  - Applicable clauses affecting the ownership, such as lease, easement, covenants, restrictions, or conditions, including forfeiture

4.0.3 Impact Analysis and Mitigation Strategies on Section 4(f)/Section 6(f) Properties

- Determine if any 4(f) or 6(f) resources would be used by each project build alternative.

[1] Use occurs when 1) the property is acquired for a transportation project, 2) there is an occupancy of land that is adverse to the preservationist purpose of Section 4(f), or 3) there is (are) proximity impact(s) that substantially impair the purpose of the land (constructive use). An example of constructive use would be excessive noise near an amphitheater. NOTE: Consult with FRA, early to determine whether constructive use may be an issue. For the purposes of Section 4(f), temporary construction easements do not normally constitute "use." See 23 CFR 774 (p)(7) and http://www.fhwa.dot.gov/environment/4f_apps/22.htm.

- Discuss the use of each Section 4(f)/Section 6(f)[2] property: amount of land to be used, facilities and functions affected, noise, visual, etc.
- Where anticipated proximity effects raise an issue of constructive use of a Section 4(f) property, coordinate with Program Management team and with FRA to determine if Section 4(f) applies. In these cases, the EIR/EIS should contain sufficient analysis and information to demonstrate that the resource(s) is/is not substantially impaired.
- For EIR/EISs where a use of Section 4(f) property is anticipated, prepare a summary table comparing the impacts of the project alternatives. Those impacts that can be quantified should be quantified while others should be qualitatively described.
- Discuss any build alternatives that would not have use of any Section 4(f) or 6(f) resources.
- Discuss the results of preliminary coordination with the public official having jurisdiction over the Section 4(f) property and with regional (or local) offices of DOI and, as appropriate, the Regional Office of National Park Service and the Forest Supervisor of the affected National Forest. Generally, the coordination should include discussion of avoidance alternatives, impacts to the property, and measures to minimize harm. In addition, the coordination with the public official having jurisdiction should include, where necessary, a discussion of significance and primary use of the property.

4.0.4 Avoidance Alternatives

Avoidance Alternatives Analysis will only be conducted for non-*de minimis* Section 4(f) resources.

- When a use of Section 4(f) property by any of the build alternatives is anticipated, identify and evaluate location and design alternatives that would minimize impacts or avoid the Section 4(f)/6(f) resources.
- Where an alternative would use land from more than one Section 4(f) property, the analysis needs to evaluate alternatives which avoid or have reduced use of each Section 4(f) property (23 CFR 771.135(i)).
- The design alternatives should be in the immediate area of the property and consider minor alignment shifts, a reduced facility, retaining structures, noise walls, etc. individually or in combination, as appropriate.
- Reference and summarize the detailed descriptions of project alternatives already described in the EIR/EIS. For alternatives that avoid Section 4(f) resources but have been eliminated from further discussion, a discussion shall be provided as to whether these alternatives are feasible and prudent and, if not, the reasons why.
- Section Environmental Team will need to work with the Section Engineering Team to identify avoidance alternatives and design these to a level that is sufficient for impact analysis; need to describe reasons why some alternatives are not feasible or prudent. Also, if Section 6(f) property is required, identify replacement property, if any, which must be of at least equal value, must be of reasonably equivalent usefulness and location to that being converted, and meet the eligibility requirements for L&WCF assisted acquisition.

[2] Section 6(f) prohibits the conversion of property acquired or developed with these grants to a non-recreational purpose without the approval of the National Park Service. If L&WCF funds were used for acquisition or improvement, certain requirements must be met before the land can be acquired (see Avoidance Alternatives).

4.0.5 Measures to Minimize Harm

A. METHODOLOGY FOR MEASURES TO MINIMIZE HARM

Discuss all feasible measures to minimize the impacts of the proposed action on the Section 4(f) property(ies) if there are no prudent and feasible avoidance alternatives. Detailed discussions of mitigation measures in the EIR/EIS should be referenced and appropriately summarized. If the potential impacts been reduced to a *de minimus* level and the agency with jurisdiction concurs (owner-manager for parkland; SHPO for historic resources), this is reported in the Project EIS/EIR and the Section 4(f) process is complete. No further approval is necessary.

Where Section 6(f) land is involved, summarize the National Park Service's (NPS) position on land transfers and include a copy of the NPS letter.

B. FOR FINAL 4(F)/6(F) EVALUATION

When the preferred alternative uses Section 4(f) land, the final Section 4(f) evaluation must contain (23 CFR 774(i) and (j)):

- Information from the draft evaluation
- A discussion of the basis for concluding that there are no feasible and prudent alternatives to the use of the Section 4(f) land. The supporting information must demonstrate that "there are unique problems or unusual factors involved in the use of alternatives that avoid these properties or that the cost, social, economic, and environmental impacts, or community disruption resulting from such alternatives reach extraordinary magnitudes" (23 CFR 771.135(a)(2)). This language should appear in the document together with the supporting information.
- A discussion of the basis for concluding that the proposed action includes all possible planning to minimize harm to the Section 4(f) property. When there are no feasible and prudent alternatives that avoid the use of Section 4(f) land, the final Section 4(f) evaluation must demonstrate that the preferred alternative is a feasible and prudent alternative with the least harm on the Section 4(f) resources after considering mitigation to the Section 4(f) resources.
- A summary of the appropriate formal coordination with the Headquarters Offices of DOI (and/or appropriate agency under that Department) and, as appropriate, the involved offices of U.S. Department of Agriculture and U.S. Department of Housing and Urban Development.
- Copies of all formal coordination comments and a summary of other relevant Section 4(f) comments received an analysis and response to any questions raised. Where new alternatives or modifications to existing alternatives are identified and will not be given further consideration, the basis for dismissing these alternatives should be provided and supported by factual information. Where Section 6(f) land is involved, the NPS's position on the land transfer should be documented.
- Add concluding statement: "Based upon the above considerations, there is no feasible and prudent alternative to the use of land from the (identify Section 4(f) property) and the proposed action includes all possible planning to minimize harm to the (Section 4(f) property) resulting from such use."
- The Final Section 4(f)/6(f) document should contain the following major sections:
    a. Overview of Section 4(f) and Section 6(f) Processes
    b. Overview of Potential Section 4(f) and Section 6(f) Resources in the Study Area
    c. Description of the Proposed Project (Purpose and Need, Build Alternatives and No Build Alternative)

d. Section 4(f) and Section 6(f) Resources Determined Not to be Used or Constructively Used by the Proposed Alternatives

e. Section 4(f) and Section 6(f) Resources Determined to be Directly Used by the Project Alternatives

f. Evaluation of Potential Construction and Operation Impacts of the Project Alternatives

g. Cooperative and Concurrent Planning

h. Commitment to Avoidance of Section 4(f) and Section 6(f) Resources

i. Commitment to Minimization and Compensation/Mitigation Related to Section 4(f) and Section 6(f) Resources

j. Conclusion

APPENDIX B

2005 STATEWIDE PROGRAM CEQA FINDINGS OF FACT

AVAILABLE ON THE CALIFORNIA HIGH-SPEED RAIL AUTHORITY WEBSITE:
http://www.cahighspeedrail.ca.gov/library.aspx

CALIFORNIA ENVIRONMENTAL QUALITY ACT

FINDINGS OF FACT

and

STATEMENT OF OVERRIDING CONSIDERATIONS

for the

CALIFORNIA HIGH-SPEED TRAIN SYSTEM

California High-Speed Rail Authority

November 2005

Adopted by Resolution No. 05-01

Table of Contents

I. Introduction 3

II. Project Description 4

III. Programmatic EIR/EIS 9

IV. Findings on Specific Impacts and Mitigation Strategies 12
- i. 3.1 Traffic and Circulation 13
- ii. 3.3 Air Quality 15
- iii. 3.4 Noise 17
- iv. 3.5 Energy 18
- v. 3.6 Electromagnetic Fields and Electromagnetic Interference 20
- vi. 3.7 Land Use Impacts 22
- vii. 3.8 Agricultural Lands 24
- viii. 3.9 Aesthetics and Visual Resources 26
- ix. 3.10 Public Utilities 27
- x. 3.11 Hazardous Materials and Wastes 29
- xi. 3.12 Cultural and Paleontological Resources 30
- xii. 3.13 Geology and Soils 33
- xiii. 3.14 Hydrology and Water Quality Impacts 36
- xiv. 3.15 Biological Resources and Wetlands 38
- xv. 3.16 Public Parks and Recreation Resources 43

V. Cumulative Impacts 45

VI. Growth-Inducing Impacts and Indirect Impacts Related to Growth 54

VII. Feasibility of Potential Alternatives 58
- a. Alternatives Considered and Not Taken Forward 58
- b. Comparison of Alternatives Studies in the EIR 64
- c. Benefits of the Preferred Program Alternative 67
- d. Selection of Preferred Corridor Alignments and Station Locations 68

VIII. Statement of Overriding Considerations 70

I.
INTRODUCTION

The California High-Speed Rail Authority (the "Authority") and the Federal Railroad Administration (the "FRA") prepared a joint programmatic environmental impact report/environmental impact statement ("EIR/EIS") to analyze the impacts of approving a high-speed train system ("HST" system) for California. As a joint document, the EIR/EIS was prepared in compliance with both the California Environmental Quality Act ("CEQA") and the National Environmental Policy Act ("NEPA"). The Authority is the State lead agency for purposes of compliance with CEQA and these findings fulfill the Authority's responsibilities in considering the Final EIR/EIS as an EIR for purposes of CEQA.

CEQA provides that no public agency shall approve a project or program as proposed, if it would result in significant environmental effects as identified in an EIR, but must instead adopt and incorporate feasible mitigation to avoid and reduce such effects and adopt appropriate findings. In section 21081 of the Public Resources Code, CEQA provides as follows:

> Pursuant to the policy stated in Sections 21002 and 21002.1, no public agency shall approve or carry out a project for which an environmental impact report has been certified which identifies one or more significant effects on the environment that would occur if the project is approved or carried out unless both of the following occur:
>
> (a) The public agency makes one or more of the following findings with respect to each significant effect:
>
> (1) Changes or alterations have been required in, or incorporated into, the project which mitigate or avoid the significant effects on the environment.
>
> (2) Those changes or alterations are within the responsibility and jurisdiction of another public agency and have been, or can and should be, adopted by that other agency.
>
> (3) Specific economic, legal, social, technological, or other considerations, including considerations for the provision of employment opportunities for highly trained workers, make infeasible the mitigation measures or project alternatives identified in the environmental impact report.
>
> (b) With respect to significant effects which were subject to a finding under paragraph (3) of subdivision (a), the public agency finds that specific overriding economic, legal, social, technological, or other benefits of the project outweigh the significant effects on the environment.

These findings include a description of the proposed HST system being approved, an explanation of the programmatic nature of this EIR/EIS, findings concerning potentially significant

environmental impacts and mitigation strategies to address such impacts, a discussion of cumulative and growth-inducing impacts, and a statement of overriding considerations.

II.
PROJECT DESCRIPTION

Background

A series of planning and feasibility studies, as well as the Authority's Business Plan, which was adopted in 2000, were prepared in California before the Authority and the FRA began the preparation of the Program EIR/EIS for a proposed California high speed train (HST) system. These previous studies and the Authority's Business Plan informed the description of the proposed HST system for study in the Program EIR/EIS. The Authority was authorized and formed in 1996, pursuant to legislation making it responsible for the planning, construction and operation of a high speed passenger train service/network for California which is integrated with the state's existing transit and rail network, and authorizing it to, among other things, select a high speed rail system, as well as proposed routes and proposed station sites. (Pub. Utilities Code, §§ 185030, 185032, 185034.) "High speed rail" is defined by statute to mean "intercity passenger rail service that utilizes and alignment and technology that makes it capable of sustained speeds of 200 miles per hour or greater." (Pub. Utilities Code, § 185012(c).)

The Authority's Business Plan describes an economically viable HST system for California, envisioning a system over 700-miles long with electrically propelled trains capable of speeds in excess of 200 mph (322 kph) on a mostly dedicated system of fully grade-separated, access-controlled tracks and with state-of-the-art safety, signaling, communication and automated train control systems. The system would connect and serve the major metropolitan areas of California, and would significantly increase the state's transportation capacity, carrying a projected minimum of 42 million passengers annually. The Business Plan recommended corridors, comprised of routes, potential alignments and potential station locations for further study. Having examined existing transportation facilities for intercity travel, state and local plans, the state's future intercity transportation needs, and the financial feasibility of a proposed HST system, the Authority's Business Plan concluded that a high speed train system would be a smart investment for California.

Proposed HST System

At the beginning of the EIR/EIS process, in order to describe a proposed HST system and alternatives for analysis in the EIR/EIS, the Authority and FRA reviewed previous studies and considered the purpose and need (for NEPA) and the project objectives (for CEQA). The purpose and primary objective of the proposed HST system is to provide a reliable mode of travel that links the major metropolitan areas of the state and delivers predictable and consistent travel times. A further purpose and objective of the system is to provide an interface with commercial airports, public transit services, and the highway network and relieve capacity constraints of the existing transportation network as increases in intercity travel demand in

California occurs, in a manner sensitive to and protective of California's unique natural resources.

To implement the Legislature's direction that a proposed HST system be coordinated with the state's existing transportation network, and to further describe a proposed HST system that would be economically viable, the Authority adopted policies and objectives for the HST system, which are listed in the Final Program EIR/EIS [1-4] and include among them the following:

- maximize intermodal transportation opportunities
- preserve environmental quality by reducing emission and VMT [vehicle miles traveled] for intercity trips
- maximize use of existing transportation corridors and rights-of-way, as feasible
- meet a portion of intercity travel demand; increase capacity for intercity mobility
- develop a practical and economically viable transportation system that can be implemented in phases by the year 2020

The Authority also set forth performance criteria for the proposed HST system that would meet the time and service quality goals necessary for an economically viable system and consistent with the Legislature's definition of a high speed rail service. To further guide the definition of HST system corridors, additional engineering criteria and parameters were described for the proposed HST system analyzed in the Program EIR/EIS. These criteria include general design parameters and requirements for shared use corridors, that is locations where the proposed HST service may share infrastructure with non-HST services. The Authority also set forth criteria for tunnels within the HST system, which would chiefly be within the northern or southern mountain crossing corridors, and criteria for potential intermediate and terminus station sites.

Preferred Program Alternative - HST System

The following HST system description is programmatic in nature and provides a broad planning and conceptual outline of the proposed train system. These findings provide a brief description of the component parts of the proposed HST system and the corridors for its location, which is based on the detailed information contained in the Final EIR/EIS and other reports included or referenced in the Final EIR/EIS.

The proposed HST system is a system over 700-miles long with electric propulsion and steel-wheeled trains capable of speeds in excess of 200 mph (322 kph) on a mostly dedicated system of fully grade-separated, access-controlled steel tracks and with state-of-the-art safety, signaling, communication and automated train control systems. The preferred corridors of the proposed HST system are largely within or adjacent to existing transportation facilities or rights of way. These corridors connect and serve the state's major metropolitan areas, and provide linkage with public transit services and the state's major commercial airports using multi-modal hub stations. The preferred HST system includes shared use corridors on the San Francisco Peninsula (Caltrain) and in southern California from Union Station in Los Angeles to Anaheim and Irvine. The preferred HST system also includes design practices to minimize impacts to resources, HST station development principles to foster smart growth, increase land use efficiency and minimize impacts to resources, and mitigation strategies to avoid and reduce environmental impacts. These practices, strategies and policies are described below in the discussion of impacts to resources.

The basic physical components of the proposed system include the trains and various structures. The trains are considered to include trainsets, communications, signal and train control systems. The various structures that will make up part of the HST system include tracks and supporting structures, HST stations, and the electrical power system and facilities. These features may be briefly described as follows:

- Tracks and supporting structures include steel tracks for an HST system over 700 miles long, aerial structures and tunnels, grade separation and access-control features (fences, berms, signals, etc.)

- The electric propulsion and distribution system consisting of a 2x25KV overhead catenary system of poles and wires, as well as electric supply and booster stations

- HST multi-modal stations, intermediate and terminus, at thirty identified potential locations, that will generally include platforms, passenger facilities, baggage facilities, connections with public transit services, parking, and landscaping

- Cleaning, maintenance and storage facilities for the trains, at locations generally identified as facilities for light cleaning and maintenance located near termini in northern and southern California and facilities for heavy cleaning and maintenance located in the Central Valley.

The corridors proposed for the location of the preferred HST system are areas containing proposed alignments and identified potential multi-modal station sites. The corridors are conceptually described and represent routes for an over 700-mile long system providing for high-speed intercity passenger rail service between the major metropolitan areas of Sacramento and the San Francisco Bay Area in Northern California, through the Central Valley, to the Los Angeles area and Orange County and to San Diego via the Inland Empire. The preferred

alignment and station locations are described briefly in the Summary in the Final Program EIR/EIS (section S.7) and depicted in the Final Program EIR/EIS.

The preferred alignment and station locations are described in detail in Chapter 6A of the Final Program EIR/EIS and can be briefly described by reference to five regional segments of the HST system as described below. All the potential HST stations would be multi-modal transportation hubs.

Bay Area to Merced:

San Francisco to San Jose: Caltrain Corridor with potential stations at Transbay Terminal as the northern terminus, Millbrae to connect to SFO, and either Redwood City or Palo Alto.

Oakland to San Jose: Hayward Line railroad right-of-way to Interstate Highway I-880 with potential stations at a northern terminus in downtown Oakland, at the Coliseum Bay Area Rapid Transit (BART) station, Union City station in Alameda County, and a downtown San Jose terminus at Diridon Station.

San Jose to Merced (Northern Mountain Crossing): A broad corridor containing a number of feasible route options has been identified for further study. The corridor is roughly bounded by (and includes) the Pacheco Pass (SR 152) to the south, the Altamont Pass (I-580) to the north, the BNSF rail corridor to the east and the Caltrain rail corridor to the west, excluding alignment options through Henry Coe State Park and station options at Los Banos. The future additional study will also further consider the above Bay Area to Merced alignment and station locations.

Sacramento to Bakersfield:

Sacramento to Stockton: Union Pacific or California Traction (CCT) alignment option with potential stations at Downtown Sacramento and Downtown Stockton.

Stockton to Merced: Burlington Northern Santa Fe (BNSF) alignment option with potential stations at Modesto (Amtrak Briggsmore) and Merced (Castle Air Force Base or Downtown Merced.

Merced to Fresno: BNSF alignment with a potential station at Downtown Fresno.

Fresno to Bakersfield: BNSF alignment option with a potential station at Downtown Bakersfield (Truxton), an additional study of an alignment option to serve a potential Visalia station.

Bakersfield to Los Angeles (Southern Mountain Crossing):

Bakersfield to Sylmar: SR 58/Soledad Canyon Corridor (Antelope Valley) with a potential station at Palmdale and at the Sylmar Metrolink station.

Sylmar to Los Angeles: MTA/Metrolink is the preferred option between Sylmar and Los Angeles with a potential station at Burbank Metrolink Media City station in downtown Burbank and at Los Angeles Union Station (LAUS), in downtown Los Angeles. The MTA/Metrolink between Burbank and Los Angeles refers to a relatively wide corridor within which alignment variations will be studied at the project level.

Los Angeles to San Diego via the Inland Empire:

Los Angeles to March Air Reserve Base: UPRR Riverside/UPRR Colton Line alignment with potential stations at East San Gabriel Valley (City of Industry), Ontario Airport, and Riverside (UC Riverside).

March Air Reserve Base to Mira Mesa: I-215/I-15 alignment with potential stations at Temecula Valley (Murrieta) and Escondido.

Mira Mesa to San Diego: Carroll Canyon or Miramar Road alignment option with potential stations at University City and Downtown San Diego (Santa Fe Depot).

Los Angeles to Orange County:

Los Angeles to Anaheim/Irvine: Los Angeles to San Diego rail corridor (LOSSAN) to Anaheim/Irvine with potential stations at Norwalk, Anaheim Transportation Center, and Irvine Transportation Center.

III.
PROGRAMMATIC EIR/EIS

The Programmatic Nature of the Environmental Impact Report for the proposed California High-Speed Train System

In legislation creating the California High-Speed Rail Authority, the Legislature made a finding that it in order to have a comprehensive network of high-speed intercity rail by the year 2020, it was necessary to prepare a high-speed intercity rail plan similar to California's former freeway plan. The Authority, in consultation with the Federal Railroad Administration (FRA), determined that the appropriate initial CEQA document for the proposed HST system would be a programmatic EIR/EIS, considering the comprehensive nature and scope of the HST system, and the conceptual stage of planning and decision-making. The programmatic level of environmental review would allow for the broadest disclosure of impacts, and improve the opportunity for the Authority and the public to consider alternatives to an HST system, and different conceptually defined corridors and station options. Identifying and analyzing a proposed HST system at the very early conceptual planning stage also provides the Authority with the best opportunity to develop design practices and mitigation strategies to avoid and minimize identified impacts. (CEQA Guidelines, § 15168, subd. (b).) This Programmatic EIR/EIS, or "program EIR" as used in CEQA, will be used to tier more detailed environmental documents to assess site-specific impacts of reasonable and foreseeable alignment and station options in segments of the system that are ready for implementation.

The degree of specificity required in an EIR corresponds to the degree of specificity involved in the underlying activity that is described in the EIR. "An EIR on a project such as the adoption or amendment of a comprehensive zoning ordinance or a local general plan should focus on the secondary effects that can be expected to follow from the adoption, or amendment, but the EIR need not be as detailed as an EIR on the specific construction projects that might follow." (CEQA Guidelines, § 15146; see also *Rio Vista Farm Bureau Center v. County of Solano* (1992) 5 Cal.App.4th 351, 371.)

Based on the direction in the CEQA Guidelines, this Program EIR presents information at a broad planning level of detail. The overall and long-term environmental consequences of building and operating the HST system over the next 20-year time span are described. The analysis of environmental effects at a generalized level provides the Authority with sufficient information to make the basic policy decisions being considered:

(1) whether to continue to pursue an HST system (as described in section II)

(2) which of the conceptual corridors, alignments, and stations options evaluated in the EIR/EIS can be eliminated from further consideration, and which will be studied further in tiered EIRs.

In particular, the programmatic EIR/EIS is useful because it allows the Authority to address the broad environmental consequences associated with a determination of whether to proceed with

an HST system or not, prior to engaging in more detailed, and expensive, environmental analysis for segments of the HST system and addressing particular locations with specificity.

The *alternatives* examined in the EIR/EIS represent basic approaches to intercity travel to relieve increasing congestion and capacity constraints. Included within each of these alternatives are a multitude of potential activities for which details are not yet known, and about which individual decisions remain to be made. The detailed impacts analysis necessary to make decisions about future site-specific actions to implement the HST System Alternative will be provided in tiered environmental documents.

The *thresholds of significance* for most of the environmental resources discussed in the EIR/EIS impacts analysis are based on the CEQA Appendix G Environmental Checklist questions and are described in qualitative terms. The thresholds are intended to identify potentially significant impacts at a programmatic level. For future analyses, the measure of significance will vary depending on the nature and type of the proposed action, the site characteristics where the actions take place, and how they affect the existing conditions at the time of the proposed actions.

The programmatic *impacts analysis* focuses on the potential direct and indirect impacts associated with building and operating an HST system along the conceptual corridors discussed in the EIR. The anticipated environmental impacts are identified based on methodologies specific to the particular resource area. Information sources included existing data and studies, such as GIS maps and data bases. No field studies were performed for this program-level analysis beyond limited site visits, and the buffer area used for the analysis was many times larger than the actual right-of-way in most instances. (See EIR, p. 7-2.)

Because this program-level EIR/EIS does not assess the impacts of future actions to implement an HST system at specific locations, it cannot predict with certainty which impacts will occur and which more detailed project-specific mitigation measures will be appropriate for mitigating those impacts. Consequently, the EIR/EIS identifies *mitigation strategies*, which are an array of actions that can be used to avoid or minimize the types of environmental impacts anticipated as a result of implementation of the HST system. These mitigation strategies provide the basis to tailor more specific mitigation measures that can be applied to and refined for specific projects, and for purposes of CEQA, they serve as mitigation measures at a programmatic level. The Authority's expectation is that these mitigation strategies are, and will be, adequate to address the identified environmental impacts. In some areas additional measures were suggested by comments, and although they may not have been adopted at the program level, they will be further considered at the project level. Some mitigation strategies may cause other adverse environmental impacts at the same time that they mitigate impacts addressed in this Program EIR/EIS. At this programmatic level of analysis, it is impractical to analyze the specific impacts of mitigation measures or the measures that may be needed to mitigate those secondary impacts. During review of site-specific project proposals, the additional impacts created by the application of mitigation strategies, if any, will be analyzed, and further measures added as necessary to avoid or reduce those impacts.

This Program EIR/EIS is structured to be used as a tiering document. Individual environmental reviews of second-tier projects to implement the HST system can incorporate by reference and use relevant provisions of the Program EIR/EIS as a basis from which to supplement this analysis and refine the level of detail. Tiering will assist the Authority in focusing on issues that are ripe for decision at each stage of environmental review and to exclude from consideration issues that have already been decided or that are not ready for decision. Second-tier documents will be prepared to concentrate on issues specific to the individual project being implemented and site(s) chosen for the action before construction can be initiated. The environmental review and initial studies for site-specific, second-tier projects can incorporate by reference the discussions in the program EIR, and "concentrate on the environmental effects which (a) are capable of being mitigated, or (b) were not analyzed as significant effects on the environment in the prior environmental impact report." (Pub. Resources Code Section 21068.5)

At the project-level of environmental review, the Authority will assess the site characteristics, size, nature, and timing of proposed actions to determine whether the impacts of the specific projects are potentially significant or can be avoided or mitigated to a less-than significant level. However, since it is not possible to precisely assess the site-specific impacts or precisely measure the potential for mitigation to avoid or reduce project-level impacts as part of this programmatic analysis, and due to this uncertainty the Program EIR/EIS treats some of these impacts as potentially significant at a programmatic level. Where it is anticipated that feasible mitigation measures may not be available to avoid or reduce these impacts to a less-than-significant level, based on currently available information, this Program EIR/EIS document treats these impacts at the programmatic level as potentially significant and unavoidable, even where this conclusion is not certain. Future review in tiered environmental documents will be needed to determine the impacts of specific actions and appropriate mitigation for site-specific actions.

Where a second-tier project involves impacts that are addressed in the Program EIR/EIS, the Authority will use the mitigation strategies adopted in these findings as a basis to formulate project-level mitigation measures and enforcement programs. Because all the potential actions and impacts for tiered projects to implement an HST system cannot be anticipated at a programmatic level, the Authority will select those strategies applicable to the impacts associated with the specific location and type of action and refine them into mitigation measures. In addition, the Authority will add additional mitigation measures as necessary, and will monitor the effectiveness of mitigation used for second-tier projects.

IV.
FINDINGS ON SPECIFIC IMPACTS AND MITIGATION STRATEGIES

Chapter 3 of the Program EIR/EIS sets forth the environmental effects of the HST Alternative that would be potentially significant or significant in the absence of mitigation strategies. These impacts are set forth below, along with mitigation strategies that the Authority adopts, that will avoid or substantially lessen those potentially significant or significant impacts. As environmental studies for actual project implementation go forward, these mitigation strategies will be refined into actual mitigation measures. These findings recognize that the strategies are not an exclusive list of mitigation, and that additional mitigation measures may be added at the project-level. In addition, as mitigation is developed at the project-level, some mitigation included herein as programmatic mitigation strategies may be found to be the responsibility of other public agencies instead of, or in addition to, the Authority.

Also set forth in these findings are those impacts that the Authority finds cannot with certainty be avoided or reduced to a less-than-significant level even with the adoption of all feasible mitigation strategies proposed in this EIR. In adopting these findings and mitigation strategies, the Authority also adopts a Statement of Overriding Considerations setting forth the economic, social, and other benefits of the HST Alternative that will render these impacts acceptable.

The Authority is not required to make findings or adopt mitigation strategies or policies as part of this decision for impacts that are less than significant. For some resource areas, however, the Authority is choosing to include findings to provide context and rationale about the less-than-significant impact conclusion at the programmatic level. In addition, while the Program EIR/EIS includes a discussion of certain issues necessary to satisfy the National Environmental Policy Act, these issues do not necessarily represent environmental impacts for which findings are required under CEQA. The Authority has determined that the following areas discussed in the Program EIR/EIS do not require findings:

- travel considerations
- mineral resources
- movement of goods
- emergency access

Additionally, the following listed areas are discussed in the findings to provide additional information and context, although the Authority has concluded that these impacts will be less than significant even without the adoption of mitigation strategies:

- public transit
- parking
- EMI/EMF
- public utilities
- severance impacts to agricultural lands

3.1 Traffic and Circulation

Impact 1. Traffic and Circulation

The HST system would add capacity to the state's transportation infrastructure which would result in a volume to capacity ratio improvement (V/C) and would relieve congestion on certain intercity highways linking major metropolitan areas of the state to the extent that trips taken by HST would otherwise have used highways. By providing another mode of intercity travel in California the HST would also improve reliability and increase mobility within the state's transportation system as a whole. The HST system would result in traffic improvement in areas where grade separation for the HST system would replace an at-grade crossing which was responsible for periodic local traffic delays.

Despite some expected improvement in highway conditions in areas to be served by the HST system, the level of service (LOS) on local roadways in many of these areas is currently poor (ratios of more than 1.0 on average for each of the five regions) and would remain so even with the HST system. The operation of the HST system would result in increased traffic around HST station locations and increased congestion on highway and roadway segments which would provide access to stations.

The construction of the HST system would result in short-term impacts of increased traffic in areas affected by the construction process for the duration of the construction in that area. In a few areas the HST system would result in closure, either temporary or permanent, of local roadways, that in turn would result in increased traffic on nearby roads and longer travel routes for some travelers.

The Authority finds that the localized increases in traffic and congestion near HST station areas and during construction are significant at the programmatic level of analysis. The following mitigation strategies can be refined and applied at the project-specific level and will reduce this impact:

1. Require that HST system stations serve as multi-modal transportation hubs providing easy connection to local/regional bus, rail and transit services, as well as providing bicycle and pedestrian access.
2. Require the HST system to be grade-separated from all roadways to allow vehicular traffic to flow without impediment from the HST system.
3. Work with local and regional agencies to develop and implement transit-oriented development strategies, as described in chapter 6B, around HST stations.
4. Work with local and regional agencies to identify, plan, coordinate, and implement traffic flow improvements around HST station locations during project-level planning. Such improvements may include:
    a. a construction phasing and traffic management plan for construction periods

b. improving capacity of local streets with upgrades in geometrics such as providing standards roadway lane widths, traffic controls, bicycle lanes, shoulders and sidewalks
c. modifications at intersections, such as signalization and/or capacity improvements (widening for additional left-turn and/or through lanes), and turn prohibitions
d. signal coordination and optimization (including retiming and rephasing)
e. designation of one-way street patterns near some station locations
f. truck route designations
g. coordination with Caltrans regarding nearby highway facilities

5. Work with public transportation providers to coordinate services and to increase service and/or add routes, as necessary, to serve the HST station areas.

6. Avoid parking impacts by developing and coordinating implementation at the project-level of parking improvement strategies consistent with local policies, including shared parking, off-site parking with shuttles, parking and curbside use restrictions, parking permit plans for neighborhoods near HST stations, and other parking management strategies.

The Authority finds that the foregoing strategies will reduce this impact to a less-than-significant level, although the specific measures to be applied at each location are to be determined at the project-level for areas expected to experience traffic congestion due to the HST system and are to be implemented in coordination with local and regional land use and transportation authorities, and in consultation with Caltrans as appropriate.

Impact 2. Transit/Public Transportation

The EIR's treatment of traffic impacts included analysis of public transportation services in the vicinity of proposed HST system station locations and concluded that the proposed HST system would not result in adverse impacts on public transportation services. HST stations would be multi-modal hubs which would provide for connectivity with other services. The HSRA will consult and coordinate with public transit service providers regarding feeder services to HST stations during project-level studies.

The Authority finds this impact less than significant viewed on a system-wide basis. The Authority intends to work with public transportation providers to provide coordination of services so as to enhance use of such services along with use of the HST system.

Impact 3. Parking

The EIR analysis of traffic included consideration of parking near the locations of proposed HST stations. HST stations are assumed to include parking at a level consistent with local plans and policies and adequate for the increment of parking demand attributable to HST service at a multi-modal hub, also taking into account conditions at specific locations during project-level studies.

Coordination and integration of the HST system with public transportation services will reduce demand for parking, and result in shared parking in some areas for public transportation services.

The Authority finds this impact less than significant viewed on a system-wide basis. During project-level studies, environmental analyses will provide more detailed review of parking demand and parking to be included with proposed HST stations, plus identify coordination needed with local/regional public transportation providers. To assure parking impacts will be avoided the Authority will develop and coordinate implementation at the project level of parking improvement strategies consistent with local policies, including share parking, off-site parking with shuttles, and parking and curbside use restrictions parking permit plans for neighborhoods near HST stations. (See Traffic and Circulation, Impact 1, mitigation strategies, 6.).

3.3 Air Quality

Impact 1. Localized Air Quality Impacts due to Congestion/Traffic near HST Stations

The HST system would result in air quality improvement across the state in areas served by the HST system. The use of the HST system by passengers who would otherwise drive results in a reduction of vehicle miles traveled and thus, a reduction in air pollution generated by automobile combustion engines. The HST system would be powered by electricity which is expected to be provided by the state's electrical grid. Taking into account both reductions in vehicle miles and the amount of air pollution generated by producing electricity to power the HST system (considering this pollution as an average based on power plants supplying the state's electrical grid), the HST system would result in a net air quality improvement. Design practices included in the HST system include the use of energy efficient trains and power distribution systems. Air quality improvement would also result from congestion relief afforded by the use of HST to the extent (1) that congested highway traffic would be relieved on intercity highway segments, (2) that grade separations for the HST system improve local traffic flow by removing traffic impediments that cause congestion and delays, and (3) that public transportation use increases. With the HST system, however, around certain HST stations an increase in traffic and congestion is expected along with a related localized increase in vehicle-generated air pollution. At the program level this localized impact is considered significant, because of uncertainty, since it is not possible to know the exact location, extent, and characteristics of increased traffic and congestion that will be generated around various HST station sites.

The Authority finds that the following mitigation strategies can be refined and applied at the project-level and will reduce this impact:

1. Assure that HST stations are multi-modal hubs and include appropriate parking(see the mitigation strategies for Traffic and Circulation, Impact 1.).
2. Coordinate with local and regional public transportation providers to increase opportunities for connection between the HST system and other public transportation services.

3. Work with local and regional agencies to implement local street and roadway improvements, including various traffic flow improvements and congestion management techniques, and parking management strategies to reduce localized pollution from traffic related to the HST system (see the mitigation strategies for Traffic and Circulation, Impact 1.)

The Authority finds the mitigations strategies listed above will reduce this impact to a less than significant level.

Impact 2. Short-term Air Quality Impacts due to Construction

Construction impacts associated with the HST system include emissions from various activities, such as the use of diesel equipment, soil disturbance, and congestion-related traffic and route changes, all of which are expected to generate temporary short-term localized increases in air pollution. This impact is considered significant at the program level.

The Authority finds that the following mitigation strategies can be refined and applied at the project-level and will reduce this impact:

1. Water all active construction areas at least twice daily.
2. Require that all trucks hauling soil, sand, and other loose materials be covered or maintain at least two feet of freeboard.
3. Pave, apply water three times daily, or apply non-toxic soil stabilizers on all unpaved access roads, parking areas and staging areas at active construction sites.
4. Sweep daily (with water sweepers) all paved access roads, parking areas and staging areas at active construction sites.
5. Sweep nearby streets daily (with water sweepers) if visible soil materials from HST system construction are carried onto adjacent public streets.
6. Hydroseed or apply non-toxic soil stabilizers to inactive construction areas (previously graded areas inactive for ten days or more).
7. Enclose, cover, water twice daily or apply non-toxic soil binders to exposed stockpiles of dirt, sand, etc.
8. Limit traffic speeds on unpaved roads to 15 mph
9. Install sand bags or other erosion control measures to prevent silt runoff to public roads.
10. Replant vegetation in disturbed areas as quickly as possible.
11. Use alternative fuels for construction equipment when feasible.
12. Minimize equipment idling time.
13. Maintain properly tuned equipment.

The Authority finds that the above mitigation strategies will reduce this impact to a less than significant level.

3.4 Noise

Impact 1 Increased Noise from Train Operations and Construction

The EIR evaluated noise and vibration impacts in a study area of 1000 feet from the centerline of the alignment options. The HST could create long-term noise impacts along the alignment segments from train operations by creating intermittent increased noise. As a new noise source the HST system would be far quieter than typical passenger and freight trains. The HST segments have noise impact ratings ranked as low, medium, and high. Construction of the HST could also cause short-term construction-related noise impacts. Considering CEQA Appendix G and the FRA's noise impact criteria as a basis for thresholds of significance, this impact is considered significant when viewed on a system-wide basis. The significant noise impact from operations will not occur along the entire HST system alignment. Rather, the impact would be localized, because certain areas along the proposed HST system alignment have no sensitive receptors, and because trains speeds are slower in some places leading to lower noise impact ratings.

The following mitigation strategies can be refined and applied at the project-specific level and will reduce this impact:

1. Grade separations to eliminate grade crossing related noise.
2. Noise barriers, such as sound walls, trenches or earth berms, where there are severe noise impacts.
3. Require noise reduction in HST equipment design and track structures design
4. Use of enclosures or walls to surround noisy construction equipment, and installation of mufflers on engines; substitution of quieter equipment or construction methods, minimizing time of operation and locate equipment farther from sensitive receptors.
5. Where not already included, consider placing alignment sections in tunnel or trenches or behind berms where possible and where other measures are not available to reduce significant noise impacts.
6. Suspend construction between 7:00 pm and 7:00 am and/or on weekends or holidays in residential areas where there are severe noise impacts.
7. In managing construction noise take into account local sound control and noise level rules, regulations and ordinances.
8. Ensure that each internal combustion engine would be equipped with a muffler of a type recommended by the manufacturer.
9. Specify the use of the quietest available construction equipment where appropriate and feasible
10. Turn off construction equipment during prolonged periods of non-use .

11. Require contractors to maintain all equipment and to train their equipment operators.
12. Locate noisy stationary equipment away from noise sensitive receptors.

The Authority finds that the foregoing mitigation strategies will reduce this impact to a less-than-significant level.

Impact 2 Exposure to Ground-borne Vibration

Ground-borne vibration from trains is the fluctuating motion experienced by people on the ground and in buildings near railroad tracks. Vibration can create impacts to adjacent buildings, and therefore adjacent buildings were considered as receptors for the EIR's analysis. The HST system could cause an increase in ground-borne vibrations when the HST passes by an area. The ground-borne vibration impact would not occur along the entire length of the HST system alignment. Rather, the EIR identified 10-60 miles of the HST alignment that could be subject to vibration impacts. Construction activities can also cause some short-term ground-borne vibration. Considering CEQA Guidelines Appendix G as a basis for thresholds of significance, this impact on some adjacent buildings is considered significant when viewed on a system-wide basis.

The following mitigation strategies can be refined and applied at the project-specific level and will reduce this impact:

1. Specify the use of train and track technologies that minimize ground vibration such as state of the art suspensions, resilient track pads, tie pads, ballast mats or floating slabs.
2. Phase construction activity, use low impact construction techniques and avoid use of vibrating construction equipment where possible to avoid vibration construction impacts.

The Authority finds that the foregoing mitigation strategies will reduce this impact to a less-than-significant level.

3.5 Energy

Impact 1. Increased Energy Use and Electricity Demand with the HST System

The HST System would result in decreased vehicle miles traveled (VMT) for intercity trips in the areas served by the HST System and a decrease in overall energy consumed for intercity trips. The energy savings would be larger than those shown in the EIR/EIS to the extent that the HST System would relieve congestion on intercity highway links, since congestion contributes to increases in fuel consumed per mile by vehicles on the highway. The HST would result in an increase in energy consumption by 9% over existing conditions, an increase which would be

smaller and would grow more slowly than the increase in energy consumption that would be associated with either the 2020 No Project Alternative or the Modal Alternative. The HST System would result in decreased overall per capita energy consumption for intercity travel. With the HST System overall direct energy use for intercity travel would be equivalent to 5.2 million barrels of oil less per year than the 2020 No Project Alternative, which would represent a 22 % energy savings. The HST System would have a beneficial effect on overall statewide transportation-related energy use, considering overall energy as a combination of both energy from petroleum fuels and electrical energy.

The HST System would be constructed in phases and is expected to draw power from the statewide electrical grid, which receives power from many sources. The HST system would result in an increase in demand on the statewide electricity supply that could reach 480 MW or 0.6% of projected statewide electricity demand in 2020. With proper planning and design of the power distribution facilities for the HST system in relation to the overall state electrical grid, localized impacts from providing electricity to the HST system can be avoided. At the program level, this impact is considered significant due to the uncertainty of future projections of energy demand and generation capacity to 2020.

The Authority finds that the following mitigation strategies can be refined and applied at the project-level and will reduce this impact:

1. HST stations will be multi-modal hubs providing linkage for various transportation modes, which will contribute to increased efficiency of energy use for intercity trips and by commuters, and the stations will be required to be constructed to meet Title 24 California Code of Regulations energyefficiency standards.
2. Design practices will require that the electrically powered HST technology be energy efficient, include regenerative braking to reduce energy consumption, and minimize grade changes in steep terrain to reduce energy consumption
3. Design practices will require that localized impacts be avoided through planning and design of the power distribution system for the HST System
4. Locate HST maintenance and storage facilities within proximity to major stations/termini.

The Authority finds that the above mitigation strategies will reduce this impact to a less than significant level.

Impact 2. Energy Use During Construction of the HST System

Construction of the HST System would result in one-time non-recoverable energy consumption costs that would be similar in scale to the energy consumption requirements that would be needed for the Modal Alternative, and would be in addition to energy consumed by the planned transportation improvements included in the No Project Alternative. The result of the construction of the HST system would be a new transportation mode that would reduce fuel consumption as compared to the 2020 No Project Alternative. At the program level this impact

is considered significant due to the uncertainty of future projections of energy demand and generation capacity to 2020.

The Authority finds that the following mitigation strategies can be refined and applied at the project-level and will reduce this impact:

1. Develop and implement a construction energy conservation plan.
2. Use energy efficient construction equipment and vehicles.
3. Locate construction material production facilities on-site or in proximity to project construction sites.
4. Develop and implement a program encouraging construction workers to carpool or use public transportation for travel to and from construction sites.

The Authority finds that the above mitigation strategies will reduce this impact to a less than significant level.

3.6 Electromagnetic Fields and Electromagnetic Interference

Impact 1 Exposure of electromagnetic fields to HST system workers, passengers, and nearby residents, schools and other facilities.

Electromagnetic fields (EMFs) are produced by, among other things, the generation, transmission, and use of electric power. The electromagnetic fields result from the flow of current through wires or electrical devices, and the strength of the magnetic fields depends on equipment design and level of current. The health effects of long-term exposure to low frequency magnetic fields remain unresolved, although the California Department of Health Services in a 2002 study found no evidence to substantiate a relationship between extremely low frequency magnetic fields and cancer or other diseases. Neither the federal government nor the State of California has established regulatory limits for EMF exposure, and there are no established standards or levels of exposure that are known to be either safe or harmful.

The operation of the HST system could generate additional levels of exposure to electromagnetic fields. The level of exposure will depend on a number of factors that will vary depending on the alignments and operations, including design of power supply systems and vehicles, to be decided at the project-level of design.

Depending on the configuration of the source, the strength of an EMF decreases in proportion to distance or distance squared, or even more rapidly. EMFs are measured in terms of their frequency. The HST catenary and distribution systems will operate primarily at 60-Hz fields, which is considered an extremely low frequency (ELF). Because of their rapid decrease in strength with distance, EMFs in excess of background levels are likely to be experienced only relatively near sources.

There is no scientific consensus that there are adverse effects of low-level EMF. Numerous studies have addressed but failed to establish any significant adverse health effects, and various industry, government and scientific organizations with expertise in electromagnetic fields technology have produced a range of voluntary standards that represent their best judgment of what levels are considered safe. The extremely low frequency EMF that result from the operation of the HST system is substantially below any of the standards examined by these experts. Consequently, based on the Authority's review of the scientific evidence, and considering the CEQA Appendix G thresholds of significance for effects on human beings, the Authority has determined that that the increased level of EMF as a result of the HST system operation will be less-than-significant at a programmatic, system-wide level.

The following design practices and mitigation strategies can be refined and applied at the project-specific level and will avoid or reduce EMF exposure:

1. Use standard design practices for overhead catenary power supply systems and vehicles, including appropriate materials, location and spacing of facilities and power supply systems to minimize exposure to receptors over distance, and shielding with vegetation and other screening materials.
2. Design overhead catenary system, substations, and transmission lines to reduce the electromagnetic fields to a practical minimum.

The Authority finds that the above avoidance strategies are to be included in the HST system.

Impact 2 Electromagnetic Interference with Electronic and Electrical Devices.

The HST would generate incidental radiofrequency (RF) fields, and would also use wireless communications that generate radiofrequency fields. Radiofrequency fields would also be produced at the right of way by intermittent contact (unintentional arcing) between the pantograph power pickup and catenary wire. The Federal Communications Commission (FCC) has adopted regulations that apply to intentional radiators such as the proposed HST wireless systems. The EMFs may interfere with HST maintenance workers' implanted biomedical devices, but there is little potential to interfere with implanted biomedical devices of other workers, passengers or nearby residents.

The HST Alternative would introduce additional electromagnetic interference at levels for which there are no established adverse impacts. Extensive studies have failed to establish any specific levels of additional EMI/EMF exposures which result in adverse health effects, and considering the Appendix G thresholds of significance for effects on human beings, this EIR does not treat this impact as significant at the programmatic level.

The following design practices and mitigation strategies can be refined and applied at the project-specific level and will avoid or reduce EMF exposure.

1. Design the overhead catenary system, substations, and transmission lines to reduce electromagnetic interference to a practical minimum
2. Design the project component to minimize arcing and radiation of radiofrequency energy.
3. Choose devices generating radiofrequency with a high degree of electromagnetic compatibility.
4. Where appropriate, add electronic filters to attenuate radiofrequency interference.
5. Relocate receiving antennas and use antenna models with greater directional gain where appropriate, particularly for sensitive receptors near the HST system.
6. Comply with the FCC regulations for intentional radiators, such as the proposed HST wireless systems.
7. Establish safety criteria and procedures and personnel practices to avoid exposing employees with implantable medical devices to EMF levels that may cause interference with such implanted biomedical devices.

The Authority finds that the above avoidance strategies are to be included in the HST system.

3.7 Land Use Impacts

Impact 1 Incompatibility with Land Uses and Disruption to Communities

The EIR examined the impact of placing a new HST system next to existing and planned land uses using GIS databases, along with local and regional planning documents. This includes the impacts of laying new track and installing electric power distribution facilities for the HST system and of providing multi-modal transit stations as part of the HST system. Maintenance, storage and cleaning facilities will be part of the HST system, and general potential locations for these facilities were identified in order consider the representative impacts of such facilities in the program analysis. Locations for these facilities will be determined in conjunction with future project-level studies and decisions on implementation phasing. The strategies of placing the proposed HST system in or along existing transportation corridors (existing railroad or highway rights of way) and requiring stations to be multi-modal transit hubs serve to reduce the extent of land acquisition needed for the proposed new HST system, and serve to limit the extent to which adjacent land uses would be inconsistent or incompatible with the HST system. Nearly 70% of the preferred HST system corridor alignments identified in the Final EIR are either within or adjacent to existing transportation corridors.

In the EIR/EIS land use compatibility of the HST system with adjacent uses was ranked low, medium or high, with compatibility being inversely related to the sensitivity of the land use to the HST system (e.g, business, commercial and industrial areas would have high compatibility, while single family residential areas and habitat preservation areas would have low compatibility with the HST system). The HST system would be compatible with policies to support multi-modal transportation and use of public transportation, and the HSRA would work closely with local and regional agencies to implement the system.

In many areas the HST system would improve an existing transportation corridor with grade separation, and thus would improve local access and traffic patterns, and not serve as a community divider or barrier. In other areas, however, the installation of the HST system could affect land uses by creating a new barrier dividing or disrupting existing communities. This is considered a significant impact at the program level.

The following strategies can be refined and applied at the project-specific level and will reduce this impact:

1. Continue to apply design practices to minimize property needed for the HST system and to stay within or adjacent to existing transportation corridors to the extent feasible.
2. Work with local governments to consider local plans and local access needs, and to apply design practices to limit disruption to communities.
3. Work with local governments to establish requirements for station area plans and opportunities for transit oriented development.
4. Work with local governments to enhance multi-modal connections for HST stations.
5. Coordinate with cities and counties to ensure that HST facilities would be consistent with land use planning processes and zoning ordinances.
6. Provide opportunities for community involvement early in project-level studies.
7. Hold design workshops in affected neighborhoods to develop understanding of vehicle, bicycle, and pedestrian linkages in order to preserve those linkages through use of grade-separated crossings and other measures.
8. Ensure that connectivity is maintained across the rail corridor (pedestrian/bicycle and vehicular crossings) where necessary to maintain neighborhood integrity.
9. Develop facility, landscape and public art design standards for HST corridors that reflect the character of adjacent affected neighborhoods.
10. Maintain high level of visual quality of HST facilities in neighborhood areas by implementing such measures as visual buffers, trees and other landscaping, architectural design and public artwork.

The Authority finds that the mitigation strategies described above will substantially lessen or avoid this impact; however, sufficient information is not available at the program-level to conclude with certainty that mitigation will reduce this impact to a less than significant impact in all circumstances. The Authority finds that this impact is also within the purview of local government agencies to address with local planning and additional mitigation measures, but at the program level, such additional measures and the process for their implementation cannot be determined. Therefore, for purposes of this programmatic EIR, the impact is considered significant and unavoidable.

Impact 2 Impacts to Neighborhoods During Construction

In addition to the above noted potential impacts of the HST system resulting in a new barrier or dividing some established communities, short term impacts of the HST system during

construction include potential neighborhood disruption and division. This impact would be reduced by phasing the construction of segments of the system and by the use of in-line construction techniques where appropriate. Due to uncertainty at the program level, this impact is considered significant.

The following mitigation strategies, along with mitigation identified for construction impacts on other resources (e.g., air quality, noise) can be refined and applied at the project-specific level and will reduce this impact:

1. Develop a traffic management plan to reduce barrier effects during construction.
2. To the extent feasible maintain connectivity during construction.

The Authority finds that the mitigation strategies described above will substantially lessen or avoid this impact; however, sufficient information is not available at the program-level to conclude with certainty that mitigation will reduce this impact to a less than significant impact in all circumstances. Therefore, for purposes of this programmatic EIR, the impact is considered significant and unavoidable.

3.8 Agricultural Lands

Impact 1 Conversion of Prime, Statewide Important, and Unique Farmlands, and Farmlands of Local Importance, to Project Uses

The conversion of farmland is the change in the use of important farmland (i.e., farmland listed as prime, statewide important, unique, and farmland of local importance on the Department of Conservation's Farmland Mapping and Monitoring Program (FMMP)) to non-agricultural uses. The HST could convert approximately 2445 acres of important farmland along the proposed alignment under the "least potential impact" scenario to HST uses. This scenario measured alignment combinations that would result in the least potential impact on agricultural lands per region.

The HST could convert approximately 3860 acres of important farmland along the proposed alignment under the "greatest potential impact" scenario to HST uses. This scenario measures alignment combinations that would result in the greatest potential impact on agricultural lands per region. The number of farmland acres anticipated to be converted with the Preferred HST System Alternative would fall between the acreage estimates for the "least" and the "greatest" potential impact scenarios.

Considering CEQA Appendix G as a basis for thresholds of significance, this impact is considered significant when viewed on a system-wide basis.

The following mitigation strategies can be refined and applied at the project-specific level and will reduce this impact:

1. Avoid farmland whenever feasible during the conceptual design stage of the project.
2. Reduce the potential for impacts by sharing existing rail rights-of-way where feasible or by aligning HST features immediately adjacent to existing rail rights-of-way.
3. Reduce the potential for impacts by reducing the HST right-of-way width to 50 feet in constrained areas.
4. Increase protection of existing important farmlands by securing easements or participating in mitigation banks.
5. Coordinate with and support the California Farmland Conservancy Program to secure conservation easements on farmland in geographic areas where the HST project creates impacts.
6. Coordinate with private agricultural land trusts, local programs, mitigation banks, and Resource Conservation Districts to identify additional measures to limit important farmland conversion or provide further protection to existing important farmland.

The Authority finds that while the mitigation strategies described above will substantially lessen this impact, it is unclear absent site-specific information that this impact can be mitigated to a less-than-significant level over the entire HST system. Therefore, for purposes of this programmatic EIR, the impact is considered significant and unavoidable.

Impact 2 Severance of Prime, Statewide Important, and Unique Farmlands, and Farmlands of Local Importance, to Project Uses

Farmland severance is the division of one farmland parcel into two or more areas of operation by the placement of a barrier through the parcel. The HST would cause some farmland severance in the Sacramento to Bakersfield region. It is not possible at the programmatic level of analysis to estimate the number of parcels or acres that could be affected by severance, and will not be possible until the HST system alignments are more refined. This impact could arise where the HST alignment options considered in the EIR would bypass urban areas on new corridors traveling mainly north-northwest to south-southwest, thereby diagonally dividing a number of north-south oriented farming parcels. Considering CEQA Appendix G as a basis for thresholds of significance, the impact is considered significant when viewed on a system-wide basis. The potential for this impact has been reduced because few bypass options have been identified for further study in the preferred alignment and station locations listed in the Final EIR

The following mitigation strategies can be refined and applied at the project-specific level and will reduce this impact:

1. Avoid farmland whenever feasible during the conceptual design stage of the project
2. Minimize severance of agricultural land by constructing underpasses and overpasses at reasonable intervals to provide property access

3. Work with landowners during final design of the system to enable adequate property access
4. Provide appropriate severance payments to landowners.

The Authority finds that the mitigation strategies described above will reduce this impact to a less-than-significant level over the entire HST system. The Authority concludes that these severance impacts are primarily economic rather than environmental. Where severance impacts could lead to significant environmental impacts at the project level of review, they will be analyzed and appropriate mitigation will be considered.

3.9 Aesthetics and Visual Resources

The construction and operation of the HST system would alter existing scenic landscapes and cause impacts on visual resources related to the addition of infrastructure in, or removal of infrastructure from, the existing landscape. The infrastructure may include construction and improvements of the HST system, tunnels, fences, noise walls, elevated guideways, catenaries (support-pole systems for power supply for trains), and stations. Visual impacts will have a higher sensitivity in areas of scenic open space and mountain crossings. The programmatic analysis of the visual impacts included photo simulations of conceptual design of the facilities associated with the HST system for a set of types of representative landscapes for each segment of the proposed corridors, and concentrated on the locations where the plans show elevated structures, tunnel portals, or areas with extensive cut or fill.

Considering the Appendix G thresholds of significance for aesthetics and visual impacts, the impacts as a result of construction and operation of the HST system are considered significant when viewed on a system-wide basis.

The following mitigation strategies can be refined and applied at the project-specific level and will reduce this impact:

1. At the project-level, design proposed facilities that are attractive in their own right and that would integrate well into landscape contexts, so as to reduce potential view blockage, contrast with existing landscape settings, light and shadow effects, and other potential visual impacts.
2. Design bridges and elevated guideways with graceful lines and minimal apparent bulk and shading effects.
3. Design elevated guideways, stations, and parking structures with sensitivity to the context, using exterior materials, colors, textures, and design details that are compatible with patterns in the surrounding natural and built environment, and that minimize the contrast of the structures with their surroundings.
4. Use neutral colors and dulled finishes that minimize reflectivity for catenary support structures, and design them to fit the context of the specific locale.

5. Use aesthetically appropriate fencing along rights-of-way, including decorative fencing, where appropriate, and use dark and non-reflective colors for fencing to reduce visual contrast.
6. Where at-grade or depressed route segments pass through or along the edge of residential areas or heavily traveled roadways, install landscape treatments along the edge of the right-of-way to provide partial screening and to visually integrate the right-of-way into the residential context.
7. Use the minimum amount of night lighting consistent with that necessary for operations and safety.
8. Use shielded and hooded outdoor lighting directed to the area where the lighting is required, and use sensors and timers for lights not required to be on all the time.
9. Design stations to minimize potential shadow impacts on adjacent pedestrian areas, parks, and residential areas, and site all structures in a way that minimizes shadow effects on sensitive portions of the surrounding area.
10. Seed and plant areas outside the operating rail trackbed that are disturbed by cut, fill or grading to blend with surrounding vegetated areas, where the land will support plants. Use native vegetation in appropriate locations and densities.
11. Use strategic plantings of fast-growing trees to provide partial or full screening of elevated guideways where they are close to residential areas, parks, and public open spaces.
12. Where elevated guideways are located down the median strips or along the edge of freeways or major roadways, use appropriate landscaping of the area under the guideway to provide a high level of visual interest. Landscaping in these area should use attractive shrubs and groundcovers, and emphasize the use of low-growing species to minimize any additional shadow effects or blockage of views.
13. Plan hours of construction operations and locate staging sites to minimize impacts to adjacent residents and businesses.

The Authority finds that while the mitigation strategies described above will substantially lessen impacts to aesthetics and visual resources, it is uncertain absent site-specific information that this impact can be mitigated to a less-than-significant level over the entire HST system. This is of greatest concern in areas where changes in scenic open space and mountain crossing areas are anticipated. As part of the site-specific design, many of the impacts on aesthetics and visual resources can be avoided or substantially mitigated. However, because of the size of the project and the variety of types of terrain it affects, the Authority does not have sufficient evidence to make that determination on a program-wide basis at this stage of design. Therefore, for purposes of this programmatic EIR, this impact is considered significant and unavoidable.

3.10 Public Utilities

Improvements associated with the proposed HST system could cause conflicts between a proposed alignment or station for the HST system and a pipeline or facility associated with a utility, including crossings. Because utilities are so prevalent throughout the study area, the

analysis could not practically assess each potential conflict. This evaluation considered three of the most common major facilities that may pose construction challenges as representative utility conflicts: electrical transmission lines, natural gas facilities, and wastewater treatment facilities. For purposes of this programmatic analysis, the alternative alignments and related facilities were overlaid over the available utility maps for the locations of infrastructure for these three utilities. The analysis divided the potential conflicts into two broad categories: those considered high-impact conflicts, which were those with fixed facilities such as electrical substations, power plants, and wastewater treatment facilities; and those considered low-impact conflicts, such as pipelines and transmission lines, which are easier to avoid by modifying the HST system route or by relocating the utility lines.

The HST system could result in up to 21 potential fixed-facility conflicts (high-impact conflicts), and up to 821 conflicts with utility transmission or pipelines (low-impact conflicts). These low-impact conflicts are not considered significant because they could generally be avoided, minimized, or mitigated by routing either the public utility or the HST system around, over, or under the facility. Where necessary, they can be relocated. Using current construction practices, these relocations would not pose significant adverse environmental impacts.

Considering the CEQA Appendix G thresholds of significance for public utilities and service systems, the conflicts of the HST system alternative with fixed facilities are considered significant when viewed on a system-wide basis, and less-than-significant for conflicts with low-impact conflicts.

The following mitigation strategies can be refined and applied at the project-specific level, and will avoid or reduce this impacts.

1. Make adjustments to the HST system alignments and vertical profiles to avoid crossing or using major utility right-of-way or fixed facilities during engineering design.
2. If avoidance is not feasible, in consultation and coordination with the utility owner, relocate or protect in place transmission lines, substations, and any other affected facilities.
3. For acquisition projects which result in utility relocation, follow the uniformity and equitable treatment policies, and comply with the requirements, of the Uniform Relocation Assistance and Real Property Acquisition Policies Act of 1970 for all property necessary for the proposed HST system.

The Authority finds that the mitigation strategies described above will avoid or reduce impacts of the HST system alternative to utilities to a less-than-significant level.

3.11 Hazardous Materials and Wastes

Construction and operation of the HST system could cause impacts to existing hazardous materials or waste sites. For this programmatic analysis, a potential hazardous waste impact is considered wherever the route of a proposed alignment or location of an HST station or maintenance facility conflicts with a known contaminated site. For this analysis of potential impacts, the assessment was limited to hazardous materials sites and hazardous waste sites listed on the federal National Priorities List (Superfund list), the State Priority List, and the California Integrated Waste Management Board's list of solid waste landfills in the State of California. The sites that pose the greatest concern are those with soil or groundwater contamination within or adjacent to the right-of-way for a proposed alignment or a station facility, and those with groundwater contamination near areas where excavation down to groundwater would be necessary.

Considering the Appendix G thresholds of significance for hazardous materials, the impacts to the public or the environment as a result of construction or operation of the HST system are considered significant at the programmatic level.

The following mitigation strategies can be refined and applied at the project-specific level and will avoid or reduce this impact:

1. Investigate soils and groundwater for contamination and prepare environmental site assessments when necessary.
2. Design realignment of the HST corridors to avoid identified sites.
3. Relocate HST associated facilities such as stations to avoid identified sites.
4. Remediate identified hazardous materials and hazardous waste contamination.
5. Prior to demolition of buildings for project construction, survey for lead-based paint and asbestos-containing materials.
6. Follow BMP's for testing, treating, and disposing of water, and acquire necessary permits from the regional water quality control board, if ground dewatering is required.
7. When indicated by project level environmental site assessments, perform Phase II environmental site assessments in conformance with the ASTM Standards related to the Phase II Environmental Site Assessment Process to identify specific mitigation measures.
8. Prepare a Site Management Program/Contingency Plan prior to construction to address known and potential hazardous material issues, including
    a. Measures to address management of contaminated soil and groundwater;
    b. Site-specific Health and Safety Plan (HASP), including measures to protect construction workers and general public; and
    c. Procedures to protect workers and the general public in the event that unknown contamination or buried hazards are encountered.

9. As part of the second-tier environmental review, consider impacts to the environment on sites identified on the Cortese list (Government Code section 65962.4) at that time.

The Authority finds that the mitigation strategies described above will avoid or reduce impacts to the public and the environment as a result of construction or operation of the HST system to a less-than-significant level.

3.12 Cultural and Paleontological Resources

The EIR analyzed the occurrence of cultural and paleontological resources within an "Area of Potential Effect" or "APE." The APE was defined as: (1) 500 feet on each side of the centerline of proposed new rail routes where additional right-of-way could be needed; (2) 100 feet on each side of the centerline for routes along existing highways and railroad rights-of-way; and (1) 100 feet around station locations. For paleontological resources, the APE was defined as 100 feet on each side of the centerline of proposed rail routes and station locations in both urban and nonurban areas. For each resource type, the HST system was ranked as having low, medium, or high occurrence of the resource within the APE.

Impact 1 Impacts to Archaeological Resources and Traditional Cultural Properties

The HST could impact archaeological resources and traditional cultural properties by causing physical destruction or damage during construction. Archaeological resources include both prehistoric and historic sites. The EIR estimated the number of archaeological sites per linear mile identified in the APE for each corridor segment, and divided it by the total length of the corridor segment to reach an average number of sites per mile to obtain a rating of sensitivity for archaeological resources. The HST system has medium to high sensitivity for archaeological sites that have the potential to be impacted, which ranges from .26 to .75 sites per mile (medium) to .76 or more sites per mile (high). Considering CEQA Appendix G as a basis for thresholds of significance, this impact is considered significant when viewed on a system-wide basis.

The following mitigation strategies can be refined and applied at the project-specific level and will reduce this impact:

1. Avoid the impact, or when avoidance cannot be accommodated, minimize the scale of the impact.
2. Incorporate the site into parks or open space.
3. Provide data recovery for the archaeological resources, which may include excavation of an adequate sample of the site contents so that research questions applicable to the site can be addressed.
4. Develop procedures for fieldwork, identification, evaluation, and determination of potential effects to archaeological resources in consultation with SHPO and Native American tribes. Procedures may include on-site monitoring when sites

are known or suspected of containing Native American human remains and be reflected in Memoranda of Agreement with appropriate bodies.

5. Coordinate and consult with tribal representatives.

The Authority finds that the mitigation strategies described above will substantially lessen or avoid this impact; however, sufficient information is not available at the program level to conclude with certainty that mitigation will reduce this impact to a less than significant level in all circumstances. Accordingly, the Authority finds this impact remains significant at the programmatic level.

Impact 2 Impacts to Historic Properties/Resources

The HST could impact historic properties and resources by causing physical destruction or damage. The EIR estimated the linear miles of development that occurred during each historic period to determine the sensitivity of a particular segment for historic resources and properties. The HST system has medium and high sensitivity for historic resources and properties along the various segments, which is defined as 26%-75% of the corridor passing through areas of historic development (medium) and 76% to 100% of the corridor passing through areas of historic development (high). Considering CEQA Appendix G as a basis for thresholds of significance, this impact is considered significant when viewed on a system-wide basis.

The following mitigation strategies can be refined and applied at the project-specific level and will reduce this impact:

1. Avoid the impact through project design. Prepare and utilize a treatment plan for protection of historic properties/resources that would describe methods to preserve, stabilize, shore/underpin, and monitor buildings, structures, and objects.
2. Avoid high vibration construction techniques in sensitive areas.
3. Record and document cultural resources that would be adversely affected by the project to the standards of the Historic American Building Survey or Historic American Engineering Record.
4. Develop design guidelines to ensure sympathetic, compatible, and appropriate designs for new construction.
5. Consult with architectural historians or historical architects to advise on appropriate architectural treatment of the structural design of proposed new structures. Prepare interpretive and/or educational materials and programs regarding the affected historic properties/resources. Materials may include: a popular report, documentary videos, booklets, and interpretive signage.
6. Make interpretive information available to state and local agencies, such as salvage items, historic drawings, interpretive drawings, current and historic photographs, models, and oral histories. Also assist with archiving and digitizing the documentation of the cultural resources affected, and disseminating material to the appropriate repositories.
7. Relocate and rehabilitate historic properties/resources that would otherwise be demolished because of the project.

8. Monitor project construction to ensure it conforms to design guidelines and any other treatment procedures agreed to by the parties consulting pursuant to Section 106 of the National Historic Preservation Act. Repair inadvertent damage to historic properties/resources in accordance with the Secretary of the Interior's Standards for Treatment of Historic Properties.
9. Salvage selected decorative or architectural elements of the adversely affected historic properties/resources, and retain and incorporate salvaged items into new construction where possible. If reuse is not possible, make salvaged items available for use in interpretive displays near the affected resources or in an appropriate museum.
10. Implement an agreement with appropriate bodies specifying procedures for addressing historic resources which may be affected by the HST system.

The Authority finds that the mitigation strategies described above will substantially lessen or avoid this impact; however, sufficient information is not available at the program level to conclude with certainty that mitigation will reduce this impact to a less than significant level in all circumstances. Accordingly, the Authority finds this impact remains significant at the programmatic level after the application of mitigation strategies.

Impact 3 Impacts to Paleontological Resources

The HST could impact paleontogical resources as a result of construction, including grading, cutting, tunneling, erecting pylons for elevated track, and due to station construction. The EIR identified the areas within the paleontological resources APE as having high, low, or undetermined sensitivity for paleontological resources based on the number of recorded resource localities and formations, as well as professional assessments of the significance of recovered resources from exposed rock units and the likelihood of recovering additional resources. The HST segments have both undetermined and high sensitivity. Considering CEQA Appendix G as a basis for thresholds of significance, the impact is considered significant when viewed on a system-wide basis.

The following mitigation strategies can be refined and applied at the project-specific level and will reduce this impact:

1. Educate workers.
2. Recover fossils identified during the field reconnaissance.
3. Monitor construction.
4. Develop protocols for handling fossils discovered during construction, such as temporary diversion of construction equipment so that the fossils could be recovered, identified, and prepared for dating, interpreting, and preserving at an established, permanent, accredited research facility.

The Authority finds that the mitigation strategies described above will substantially lessen or avoid this impact; however, sufficient information is not available at the program level to conclude with certainty that mitigation will reduce this impact to a less than significant level in

all circumstances. Accordingly, the Authority finds this impact remains significant at the programmatic level.

3.13 Geology and Soils

Impact 1 Seismic Hazards

Seismic hazards evaluated for this EIR include ground shaking and ground failure. The HST could cause risks to workers and public safety due to the collapse or toppling of facilities, either during construction or after completion, due to strong earthquakes. The HST also could create risks to public safety from automobile accidents or the interruption of automobile circulation, if strong earthquakes cause a derailment. HST facilities could sustain damage due to secondary hazards (settlement) over soft or filled ground. Considering CEQA Appendix G as a basis for thresholds of significance, this impact is considered significant when viewed on a system-wide basis.

The following mitigation strategies can be refined and applied at the project-specific level and will reduce this impact:

1. Design structures to withstand anticipated ground motion, using design options such as redundancy and ductility.
2. Prevent liquefaction and resulting structural damage and traffic hazards using: (a) ground modification techniques such as soil densification; and (b) structural design, such as deep foundations.
3. Utilize motion sensing instruments to provide ground motion data and a control system to temporarily shut down HST operations during or after an earthquake to reduce risks.
4. Design and engineer all structures for earthquake activity using CalTrans Seismic design Criteria.
5. Design and install foundations resistant to soil liquefaction and settlement.
6. Identify potential serpentinite bedrock disturbance areas and implement a safety plan.
7. Apply Section 19 requirements from the most current CalTrans Standard Specifications to ensure geotechnically stable slopes are planned and created.
8. Install passive or active gas venting systems and gas collection systems in areas where subsurface gases are identified.
9. Remove corrosive soil and use corrosion protected materials in infrastructure.
10. Address erosive soils through soil removal and replacement, geosynthetics, vegetation, and or rip/rap, where warranted.
11. Remove or moisture condition shrink/swell soils.
12. Utilize stone columns, grouting, and deep dynamic compaction in areas of potential liquefaction.
13. Utilize buttress berms, flattened slopes, drains, and/or tie-backs in areas of slope instability.

14. Avoid settlement through preloading, use of stone columns, deep dynamic compaction, grouting, and/or special foundation designs.

The Authority finds that the foregoing mitigation strategies will reduce this impact to a less-than-significant level.

Impact 2 Surface Rupture Hazards

The HST could cause risks to workers and public safety due to ground rupture along active faults, either during construction or after completion. The HST also could create secondary public safety risks caused by damage to highways or airports, or interruption of these transportation services, in the event of train derailment caused by ground rupture along active faults. Considering CEQA Appendix G as a basis for thresholds of significance, this impact is considered significant when viewed on a system-wide basis.

The following mitigation strategies can be refined and applied at the project-specific level and will reduce this impact:

1. Install early warning systems triggered by strong ground motion associated with ground rupture, such as linear monitoring systems (i.e., time domain reflectometers) along major highways and rail lines within the zone of potential rupture to provide early warnings and allow for temporary control of rail and automobile traffic to avoid and reduce risks.
2. Continue to modify alignments to avoid crossing known or mapped active faults within tunnels.
3. Avoid active faults to the extent possible. Where avoidance is not possible, cross active faults at grade and perpendicular to the fault line.

The Authority finds that the foregoing mitigation strategies will reduce this impact to a less-than-significant level.

Impact 3 Slope Instability

The HST could cause risks to workers and public safety due to the failure of natural or construction cut slopes or retention structures. Considering CEQA Appendix G as a basis for thresholds of significance, this impact is considered significant when viewed on a system-wide basis.

The following mitigation strategies can be refined and applied at the project-specific level and will reduce this impact:

1. Install temporary and permanent slope reinforcement and protection, based on geotechnical investigations, and review of proposed earthwork and foundation excavation plans.
2. Conduct geotechnical inspections during construction to verify that no new, unanticipated conditions are encountered

3. Incorporate slope monitoring in final design.

The Authority finds that the foregoing mitigation strategies will reduce this impact to a less-than-significant level.

Impact 4 Difficulty in Excavation

The HST alignment could cross areas with hard, unfractured bedrock that will be difficult to excavate using methods other than blasting, which may pose a safety risk. Faulted materials that may be present can result in instability in the face of a tunnel area, another hazard. Considering CEQA Appendix G as a basis for thresholds of significance, this impact is considered significant when viewed on a system-wide basis.

The following mitigation strategies can be refined and applied at the project-specific level and will reduce this impact:

1. Identify areas of potentially difficult excavation to ensure safe practices.
2. Focus future geotechnical engineering and geologic investigations in areas of potentially difficult excavation.
3. Monitor conditions during and after construction.
4. Employ tunnel excavation and lining techniques to ensure safety.

The Authority finds that the foregoing mitigation strategies will reduce this impact to a less-than-significant level.

Impact 5 Hazards Related to Oil and Gas Fields

The HST could create the potential for migration of potentially explosive and/or toxic gases into subsurface facilities, such as tunnels or underground stations. Considering CEQA Appendix G as a basis for thresholds of significance, this impact is considered significant when viewed on a system-wide basis.

The following mitigation strategies can be refined and applied at the project-specific level and will reduce this impact:

1. Follow federal and state Occupational Safety and Health Administration regulatory requirements for excavations.
2. Consult with other agencies such as the Department of Conservation's Division of Oil and Gas, or the Department of Toxic Substances Control regarding known areas of concern.
3. Use safe and explosion-proof equipment during construction.
4. Test for gases regularly.
5. Install monitoring systems and alarms in underground construction areas and facilities where subsurface gases are present.
6. Install gas barrier systems.

The Authority finds that the foregoing mitigation strategies will reduce this impact to a less-than-significant level.

3.14 Hydrology and Water Quality Impacts

Impact 1 Impacts on Floodplains

The HST system could encroach on floodplains in each segment. For purposes of the EIR analysis, the floodplain area of impact was estimated to include the area within 100 feet on each side of the alignment centerline. Encroachment into the flood plain by the HST system is anticipated to be between 1865 and 3873 acres system wide. Floodplain encroachment may result in increased flood height from earthen berms or linear barriers to surface water flow. Considering CEQA Guidelines Appendix G as a basis for thresholds of significance, the impact is considered significant when viewed on a system-wide basis.

The following mitigation strategies can be refined and applied at the project-specific level and will reduce this impact:

1. Avoid or minimize construction of facilities within floodplains where feasible.
2. Minimize the footprint of facilities within the floodplain, through design changes or the use of aerial structures.
3. Restore the floodplain to be equivalent to its prior function in instances where the floodplain is impacted by construction.

The Authority finds that the mitigation strategies described above will reduce this impact to a less-than-significant level.

Impact 2 Impacts on Surface Waters

The HST system could encroach on surface water resources. For purposes of EIR analysis, the area of impact for streams and lakes was estimated to include an area including the representative facility footprint, defined as within 50 feet on each side of the centerline. For the representative footprint, encroachment onto streams would be approximately in the range of 22,600 to 32,400 linear feet, while encroachment onto lakes would be approximately 7 to 27 acres. The HST would also add impervious surface area, which can reduce water infiltration, contribute to runoff, and negatively affect surface water quality. The HST could cause erosion, which can negatively affect water quality, where the alignment options would extend to or along the coast along highly erodable slopes. Considering CEQA Appendix G as a basis for thresholds of significance, these impacts are considered significant when viewed on a system-wide basis.

The following mitigation strategies can be refined and applied at the project-specific level and will reduce this impact:

1. Use construction methods and facility designs to minimize the potential encroachments onto surface water resources.
2. Minimize sediment transport caused by construction by following best management practices (BMPs) as part of National Pollutant Discharge Elimination System (NPDES) and Storm Water Pollution Prevention Plan requirements that will be included in construction permits. BMPs may include measures such as:
    a. providing permeable surfaces where feasible;
    b. retaining and treating stormwater onsite using catch basins and filtering wet basins;
    c. minimizing the contact of construction materials, equipment, and maintenance supplies with stormwater;
    d. reducing erosion through soil stabilization, watering for dust control, installing perimeter silt fences, placing rice straw bales, and installing sediment basins;
    e. maintaining water quality by using infiltration systems, detention systems, retention systems, constructed wetland systems, filtration systems, biofiltration/bioretention systems, grass buffer strips, ponding areas, organic mulch layers, planting soil beds, sand beds, and vegetated systems such as swales and grass filter strips that are designed to convey and treat either fallow flow (swales) or sheetflow (filter strips) runoff.
3. Use methods such as habitat restoration, reconstruction of [habitat] onsite, and habitat replacement offsite to minimize surface water quality impacts.
4. Comply with mitigation measures included in permits issued under sections 404 and 401 of the federal Clean Water Act.
5. Comply with requirements in the Storm Water Pollution Prevention Plan to reduce pollutants in storm water discharges and the potential for erosion and sedimentation.
6. Comply with requirements of section 10 of the federal Rivers and Harbors Act for work required around a water body designated as navigable and applicable permit requirements.
7. Comply with the requirements of a state Streambed Alteration Agreement for work along the banks of various surface water bodies.
8. Implement a spill prevention and emergency response plan to handle potential fuel or other spills.
9. Where feasible, avoid significant development of facilities in areas that may have substantial erosion risk, including areas with erosive soils or steep slopes.

The Authority finds that the mitigation strategies described above will reduce this impact to a less-than-significant level.

Impact 3 Impacts on Groundwater

The HST system may encounter groundwater during construction of at- and above-grade structures, tunnels and tunnel portals, and dewatering may be necessary. In addition, construction and operation of the HST system components may affect groundwater recharge.

Considering CEQA Guidelines Appendix G as a basis for thresholds of significance, the impact is considered significant when viewed on a system-wide basis.

The following mitigation strategies can be refined and applied at the project-specific level and will reduce this impact:

1. Minimize development of facilities in areas that may have substantial groundwater discharge or affect recharge.
2. Apply for, obtain, and comply with conditions of applicable waste discharge requirements as part of project-level review.
3. Develop facility designs that are elevated, or at a minimum are permeable, and would not affect recharge potential where construction is required in areas of potentially substantial groundwater discharge or recharge.
4. Apply for and obtain a Storm Water Pollution Prevention Plan for grading, with Best Management Practices that would control release of contaminants nears areas of surface water or groundwater recharge. Best Management Practices may include constraining fueling and other sensitive activities to alternative locations, providing drip plans under some equipment, and providing daily checks of vehicle condition.
5. Use and retain native materials with high infiltration potential at the ground surface in areas that are critical to infiltration for groundwater recharge.

The Authority finds that the mitigation strategies described above will reduce this impact to a less-than-significant level.

3.15 Biological Resources and Wetlands

For purposes of assessing the HST system's direct impacts to biological resources, a GIS analysis was completed for the approximate footprint of the facilities, called the representative facility footprint. This was defined to be 50 feet total width along the alignment both at-grade and on aerial structures. To capture the HST system's potential for indirect effects on species and habitats due to noise, light, or shadows, a larger area was evaluated. This larger area varied depending on the nature of the location. Sensitive habitat areas included a study envelope that was .50 mile on either side of the alignment centerline, or a 1-mile wide corridor. In urbanized areas, the study envelope was 1000 feet on either side of the alignment centerline.

Impact 1 Impacts to Sensitive Habitat and Sensitive Vegetation Communities

Sensitive vegetation communities are natural communities and wildlife habitat that are unique, of relatively limited distribution in a region, or of particularly high wildlife value. The HST system could directly impact 1201 to 1568 acres of habitat. The HST system could also fragment existing habitats. The study area for the HST system indicates that there is between 9773 to 17,619 acres of sensitive vegetation, which may be indirectly affected by the HST system. The sensitive vegetation acreage range is based on the buffer areas included in the HST study area,

which were designed to provide context to the impacts analysis, and are likely to be much larger than the actual indirect effect. Considering Appendix G as a basis for thresholds of significance, the impact is considered significant when viewed on a system-wide basis.

The following mitigation strategies can be refined and applied at the project-specific level and will reduce this impact:

1. Utilize existing transportation corridors and rail lines to minimize potential impacts.
2. Use large diameter tunnels as part of the design to limit surface access needs in tunnels for ventilation or evacuation, as a method to avoid or limit impacts to vegetation and habitat above tunnels.
3. Use in-line construction (i.e., use new rail infrastructure as it is built) to transport equipment to/from the construction site and to transport excavated material away from the construction to appropriate re-use or disposal sites to minimize impacts from construction access roads on vegetation/habitat.
4. Accomplish necessary geologic exploration in sensitive areas by using helicopters to transport drilling equipment and for site restoration to minimize surface disruption.
5. Use and reuse excavated materials within the confines of the project.
6. Participate in or contribute to existing or proposed conservation banks or natural management areas, including possible acquisition, preservation, or restoration of habitats.
7. Revegetate/restore impacted areas, with a preference for on-site mitigation over off-site, and with a preference for off-site mitigation within the same watershed or in close proximity to the impact where feasible.
8. Comply with the Biological Resources Management Plan(s) developed or identified during project-level studies, as reviewed by the USFWS, CDFG, and USACE.
9. Conduct pre-construction focused biological surveys.
10. Conduct biological construction monitoring.
11. Undertake plant relocation, seed collection, plant propagation, and outplanting at suitable mitigation sites.
12. Prevent the spread of weeds during construction and operation by identifying areas with existing weed problems and measures to control traffic moving out of those areas such as cleaning construction vehicles or limiting the movement of fill.

The Authority finds that the mitigation strategies described above will substantially lessen or avoid this impact; however, sufficient information is not available at the program level to conclude with certainty that mitigation will reduce this impact to a less than significant level in all circumstances. Accordingly, the Authority finds this impact remains significant at the programmatic level after the application of mitigation strategies.

Impact 2 Impacts to Wildlife Movement Corridors

Wildlife movement/migration corridors link together areas of suitable wildlife habitat that are otherwise separated by rugged terrain, changes in vegetation, or human disturbance. These corridors are important for species survival. The HST system has the potential to affect wildlife

movement/migration corridors where the alignment crosses wildlife movement corridors. In addition, fences that will be required for at-grade tracks will introduce a new barrier to animal movement. The actual impact will depend on the selection of final alignment and the final design of structures for the HST system. Considering CEQA Guidelines Appendix G as a basis for thresholds of significance, the impact is considered significant when viewed on a systemwide basis.

The following mitigation strategies can be refined and applied at the project-specific level and will reduce this impact:

1. Construct wildlife underpasses, bridges, and/or large culverts, to facilitate known wildlife movement corridors.
2. Ensure that wildlife crossings are of a design, shape, and size to be sufficiently attractive to encourage wildlife use.
3. Provide appropriate vegetation to wildlife overcrossings and undercrossings to afford cover and meet other species requirements.
4. Establish functional corridors to provide connectivity to protected land zoned for uses that provide wildlife permeability.
5. Design protective measures for wildlife movement corridors using the following process in consultation with resource agencies:
    a. Identify the habitat areas the corridor is designed to connect
    b. Select several species of interest from the species present in the area
    c. Evaluate the relevant needs of each selected species
    d. For each potential corridor, evaluate how the area will accommodate movement by each species of interest
    e. Draw the corridors on a map
    f. Design a monitoring program
6. Utilize existing transportation corridors and rail lines to minimize potential impacts.
7. Use aerial structures or tunnels to allow for unhindered crossing by wildlife.

The Authority finds that the mitigation strategies described above will substantially lessen or avoid this impact; however, sufficient information is not available at the program level to conclude with certainty that mitigation will reduce this impact to a less than significant level in all circumstances. Accordingly, the Authority finds this impact remains significant at the programmatic level after the application of mitigation strategies.

Impact 3 Impacts to Non-wetland Jurisdictional Waters

Within the larger study envelope for the HST system (1-mile wide corridor in sensitive areas) there are up to 1.2 million linear feet of non-wetland jurisdictional waters (lakes, rivers, streams, and other water bodies). The HST system has the potential to directly or indirectly affect some of these resources. Considering Appendix G as a basis for thresholds of significance, the impact is considered significant when viewed on a systemwide basis.

The following mitigation strategies can be refined and applied at the project level and will reduce this impact:

1. Utilize existing transportation corridors and rail lines to minimize potential impacts.
2. Return degraded habitat to pre-existing conditions.
3. Create new habitat by converting non-wetland habitats into wetland or other aquatic habitat.
4. Enhance existing habitats by increasing one or more functions through activities such as plantings or non-native vegetation eradication.
5. Provide for passive revegetation by allowing a disturbed area to revegetate naturally.
6. Purchase credits in an existing wetlands or aquatic habitat mitigation bank.
7. Provide in-lieu fee payments to an agency or other entity who will provide aquatic habitat conservation or restoration.
8. Prefer on-site mitigation over off-site mitigation, and for off-site mitigation prefer that located within the same watershed or as close in proximity to the area of impact as possible.

The Authority finds that the mitigation strategies described above will substantially lessen or avoid this impact; however, sufficient information is not available at the program level to conclude with certainty that mitigation will reduce this impact to a less than significant level in all circumstances. Accordingly, the Authority finds this impact remains significant at the programmatic level.

Impact 4 Impacts to Wetlands

The HST system could directly impact 30-89 acres of wetlands. The study area for the HST system indicates there is between 3996 and 18,356 acres of wetlands in the study area, which may be indirectly effected by the HST system. Considering Appendix G as a basis for thresholds of significance, the impact is considered significant when viewed on a system-wide basis.

The following mitigation strategies can be refined and applied at the project level and will reduce this impact:

1. Utilize existing transportation corridors and rail lines to minimize potential impacts.
2. Return degraded habitat to pre-existing conditions.
3. Create new habitat by converting non-wetland habitats into wetland or other aquatic habitat.
4. Enhance existing habitats by increasing one or more functions through activities such as plantings or non-native vegetation eradication.
5. Provide for passive revegetation by allowing a disturbed area to revegetate naturally.
6. Purchase credits in an existing wetlands or aquatic habitat mitigation bank.
7. Provide in-lieu fee payments to an agency or other entity who will provide aquatic habitat conservation or restoration.
8. Develop and implement measures to address the “no net loss” policy for wetlands.

9. Prefer on-site mitigation over off-site mitigation, and for off-site mitigation prefer that located within the same watershed or as close in proximity to the area of impact as possible.

The Authority finds that the mitigation strategies described above will substantially lessen or avoid this impact; however, sufficient information is not available at the program level to conclude with certainty that mitigation will reduce this impact to a less than significant level in all circumstances. Accordingly, the Authority finds this impact remains significant at the programmatic level after the application of mitigation strategies.

Impact 5 Impacts to Marine and Anadromous Fishery Resources

The HST system has the potential to affect fishery resources during construction due to the need to cross streams and rivers. Construction activities could increase sediment loads in stormwater during rain, or be a source of chemicals, both of which could be released into creeks and harm aquatic resources. Considering CEQA Guidelines Appendix G as a basis for thresholds of significance, the impact is considered significant when viewed on a system-wide basis.

The following mitigation strategies can be refined and applied at the project-specific level and will reduce this impact:

1. Utilize existing transportation corridors and rail lines to minimize potential impacts.
2. Comply with the terms of a Streambed Alteration Agreement for work along banks of surface water bodies.
3. Implement a spill prevention and emergency response plan to handle potential fule or other spills.
4. Incorporate bio-filtration swales to intercept runoff.
5. Where feasible, avoid significant development of facilities in areas that may have substantial erosion risk, including areas with erosive soils and steep slopes.

The Authority finds that the mitigation strategies described above will substantially lessen or avoid this impact; however sufficient information is not available at the programmatic level to conclude with certainty that mitigation will reduce this impact to a less-than-significant level in all circumstances. Accordingly, the Authority finds this impact remains significant at the programmatic level after the application of mitigation strategies.

Impact 6 Impacts to Special Status Species

The HST system could directly impact 67-84 special status species based on the representative facility footprint. The study area for the HST system indicates the possible presence of 279 to 350 special status species within the area of potential indirect effect from the HST system. Some of these species could be affected by the construction and the operation of the HST system. Considering CEQA Guidelines Appendix G as a basis for thresholds of significance, the impact is considered significant when viewed on a system-wide basis.

The following mitigation strategies can be refined and applied at the project-specific level and will reduce this impact:

1. Utilize existing transportation corridors and rail lines to minimize potential impacts.
2. Relocate sensitive species.
3. Conduct pre-construction focused surveys.
4. Conduct biological construction monitoring.
5. Restore suitable breeding and foraging habitat.
6. Purchase credits from an existing mitigation bank.
7. Participate in an existing Habitat Conservation Plan.
8. Phase construction around the breeding season.

The Authority finds that the mitigation strategies described above will substantially lessen or avoid this impact; however, sufficient information is not available at the program level to conclude with certainty that mitigation will reduce this impact to a less than significant level in all circumstances. Accordingly, the Authority finds this impact remains significant at the programmatic level after the application of mitigation strategies.

3.16 Public Parks and Recreation Resources

To analyze the potential for the HST system to result in impacts to parks and recreation resources, including publicly owned parks, wildlife and waterfowl refuges, historic sites of national, state or local significance, and other recreational resources, the EIR examined the occurrence of these resources within 900 feet from the location of proposed HST facilities and considered both direct and proximity (indirect) impacts. The recreation resources identified in the analysis are covered by either section 4(f) of the federal Transportation Act or section 6(f) of the federal Land and Water Conservation Fund Act. The two referenced federal statutes require special efforts to be made in planning proposed transportation projects to avoid using and limit adverse impacts to publicly owned park and recreation lands and will require findings to be made by FRA in future project-level reviews to address federal statutory requirements. Impacts to historic resources from the HST system are addressed in section 3.12.

Impact 1 Impacts to Parks and Recreational Resources

The HST system could result in direct impacts to lands containing publicly owned parks and recreational resources by causing use of such lands for the placement of HST facilities, and could result in indirect impacts to these resources due to construction activities or HST system operations which adversely affect the use of publicly owned parks and recreational resources. In addition to addressing noise, biology, and air quality impacts in other sections of these Findings, the EIR identifies the park and recreational resources located within 900 feet of the centerline of HST alignments or facilities, and notes that the HST system would affect fewer such facilities than the Modal Alternative. The use of existing transportation corridors for the location of HST facilities and the direction that HST stations serve as multi-modal transportation hubs has

minimized the potential for the HST system impacts to parks and recreational resources. No state parks would be crossed or bisected by the HST system. The EIR, however, identified five state parks that may be within 900 feet of the HST system. Additionally, certain local, regional or federal recreational resources could be affected. At the program level it is not possible to know precisely the location, extent and particular characteristics of impacts to park resources. Due to this uncertainty, for the purposes of system-wide review at the programmatic level, this impact is considered significant.

The following mitigation strategies can be refined and applied at the project-specific level and will reduce this impact:

1. Continue to apply design practices to avoid impacts to park resources, and when avoidance cannot be accommodated, minimize the scale of the impact.
2. Apply measures at the project level to reduce and minimize indirect/proximity impacts as appropriate for the particular sites affected, while avoiding other adverse impacts (e.g., visual), such as noise barriers, visual buffers and landscaping.
3. Apply measures to modify access to/egress from the recreational resource [first paragraph 3.16.8] to reduce impacts to these resources.
4. Design and construct cuts, fill, and aerial structures to avoid and minimize visual impacts to units of the state park system.
5. Incorporate wildlife under or over crossings at appropriate intervals as necessary
6. Where public parklands acquired with public funds would be acquired for non-park use as part of the HST system, commit as required by law to providing funds for the acquisition of substantially equivalent substitute parkland or to acquiring/providing substitute parkland of comparable characteristics.
7. Restore affected parklands to natural state and replace or restore affected park facilities.
8. If park facilities must be relocated, provide planning studies as well as appropriate design and replacement with minimal impact on park use.
9. Use local native plants for revegetation.
10. Develop and implement construction practices, including scheduling, to limit impacts to wildlife, wildlife corridors and visitor use areas within public parks.
11. For temporary unavoidable loss of park and recreation facility uses consider providing compensation.

The Authority finds that the mitigation strategies described above will substantially lessen or avoid this impact; however, sufficient information is not available at the program level to conclude with certainty that mitigation will reduce this impact to a less than significant level in all circumstances. Therefore, at the programmatic level the potential for indirect impacts to parks and recreational facilities is considered significant.

V.
CUMULATIVE IMPACTS

Impact 1 Impacts on Traffic and Circulation and Travel Conditions

Implementation of the HST system could lead to a considerable contribution to the cumulative impact related to surface streets leading to and from the intercity highways and airports.

The following program level mitigation strategies can be developed, in consultation with state, federal, regional, and local governments and affected transit agencies, to improve the flow of intercity travel on the primary routes and access to the proposed stations or airports and will reduce this impact:

1. Regional strategies would include coordination with Regional Transportation planning and Intelligent Transportation System Strategies.
2. Local improvements could employ TSM/Signal Optimization; local spot widening of curves; and major intersection improvements.

Implementation of the HST system could lead to a considerable contribution to the cumulative impact related to localized travel conditions.

The following program level mitigation strategies can be developed, in consultation with state, federal, regional, and local governments and affected transit agencies, to improve the flow of intercity travel on the primary routes and access to the proposed stations or airports and will reduce this impact:

1. Regional strategies would include coordination with Regional Transportation planning and Intelligent Transportation System Strategies.
2. Local improvements could employ TSM/Signal Optimization; local spot widening of curves; and major intersection improvements.

The Authority finds that the foregoing strategies will reduce the HST system's contribution to this impact to less than cumulatively considerable. The specific measures to be applied at each location are to be determined at the project-level for areas expected to experience traffic congestion due to the HST system and are to be implemented in coordination with local and regional land use and transportation authorities, and in consultation with Caltrans as appropriate.

Impact 2 Impacts on Air Quality

Implementation of the HST system, in combination with the air quality impacts of other highway projects or airport improvements identified for the cumulative impact analysis and those projects considered in the state implementation plan for air quality, could lead to a considerable contribution to the cumulative impact related to air quality within the six-basin study area.

The project level mitigation strategies to address localized impacts can consider the following and will reduce this impact:

1. For power plants dedicated to supplying power for the HST system, if any, consider reducing emissions by increasing emission controls.
2. Design the system to utilize energy efficient, state-of-the-art equipment.
3. Promote increased use of public transit, alternative fueled vehicles, and parking for carpools, bicycles, and other alternative transportation methods.
4. Alleviate traffic congestion around passenger station areas.
5. Minimize construction air emissions.

The Authority finds the mitigations strategies listed above will reduce the HST system's contribution to this impact to less than cumulatively considerable.

Impact 3 Impacts on Noise and Vibration

Implementation of the HST system could lead to a considerable contribution to the cumulative impact related to noise and vibration.

The program level mitigation strategies will reduce this impact:

1. design practices emphasizing the use of tunnels or trenches
2. use of electric powered trains, higher quality track interface, and smaller lighter and more aerodynamic trainsets; and
3. full grade separations from all roadways.

The project level mitigation strategies include the following and will reduce this impact:

1. treatments for insulation of buildings affected by noise and vibration;
2. sound barrier walls within the right-of-way;
3. track treatments to minimize train vibrations; and
4. construction mitigation.

The Authority finds the mitigations strategies listed above will reduce the HST system's contribution to these impacts to less than cumulatively considerable.

Impact 4 Land Use Impacts

Implementation of the HST system could lead to a considerable contribution to the cumulative impact related to community and neighborhood cohesion and property loss. Combined with other transit (light rail and commuter rail) and roadway projects considered for this cumulative impact analysis these localized impacts could contribute to cumulative community/neighborhood impacts. These impacts, in combination with other transit extension and roadway projects, could cause a considerable contribution to potential cumulative impacts on various property types, neighborhoods, and communities.

The program level mitigation strategies for HST system contributions to the land use impacts, include the following and will reduce this impact:

1. design practices to maximize use of existing rights-of-way and incorporating strategies for stations to incorporate transit oriented design; and
2. coordination with cities and counties in each region to ensure that project facilities would be consistent with land use planning processes and zoning ordinances.

The Authority finds that the mitigation strategies described above will substantially lessen or avoid this impact; however, sufficient information is not available at the program-level to conclude with certainty that mitigation will reduce the HST system's contribution to this impact to less than cumulatively considerable in all circumstances. The Authority finds that to the extent that other projects contribute to this impact they are within the purview of local government agencies to address with local planning and additional mitigation measures, but at the program level, such additional measures and the process for their implementation cannot be determined. Accordingly, due to this uncertainty, the HST system's contribution to this impact is treated as cumulatively considerable.

Impact 5 Impacts on Agricultural Lands

Implementation of the HST system could lead to a considerable contribution to the cumulative impact related to the conversion of agricultural land to non-agricultural use within the study area for the HST System Alternative.

The program level mitigation strategies include the following and will reduce this impact:

1. design practices to avoid agricultural land conversion through maximizing use of existing rights-of-way to minimize encroachment on additional agricultural lands
2. utilizing aerial structure or tunnel alignments to allow for vehicular and pedestrian traffic access across the alignment; and
3. reducing the new right-of-way to 50 feet in constrained areas.

The project level mitigation strategies include the following and will reduce this impact:

1. securing easements,
2. participating in mitigation banks,
3. increasing permanent protection of farmlands at the local planning level, and
4. coordinating with various local, regional, and state agencies support farmland conservation programs.

The Authority finds that while the mitigation strategies described above will substantially lessen this impact, sufficient information is not available at the program-level to conclude with certainty that mitigation will reduce the HST system's contribution to this impact to less than cumulatively considerable in all circumstances. Therefore, for purposes of this programmatic EIR, the impact is considered cumulatively considerable.

Impact 6 Impacts on Aesthetics and Visual Resources

Implementation of the HST system could lead to a considerable contribution to the short- and long-term cumulative impact related to visual resources.

The program level mitigation strategies include the following and will reduce this impact:

1. design practices that will incorporate local agency and community input during subsequent project level environmental review in order to develop context sensitive aesthetic designs and treatments for infrastructure.

The project level mitigation strategies include the following and will reduce this impact:

1. design of facilities that integrate into landscape contexts, reducing potential view blockage, contrast with existing landscape settings, and light and shadow effects.

The Authority finds that the mitigation strategies described above will avoid or substantially lessen impacts to aesthetics and visual resources. However, because of the size of the project and absence of site-specific information related to the types of terrain affected and facilities design, sufficient information is not available at the program-level to conclude with certainty that mitigation will reduce the HST system's contribution to this impact to less than cumulatively considerable in all circumstances. Therefore, for purposes of this programmatic EIR, this impact is considered cumulatively considerable.

Impact 7 Impacts on Public Utilities

Implementation of the HST system could lead to a considerable contribution to the cumulative impact related to public utilities and future land use opportunities because of right-of-way needs, extensive utility relocation, and property restrictions associated with construction of multiple linear facilities and other reasonably foreseeable future projects in the study area.

The program level mitigation strategies include the following and will reduce this impact:

1. design practices that will avoid potential conflicts, at the project level analysis, to the extent feasible and practical. These practices include: design methods to avoid crossing or using utility rights-of-way include modifying both the horizontal and vertical profiles of proposed transportation improvements. Emphasis would be placed on detailed alignment design to avoid potential contribution to cumulative impacts from linear facilities on land use opportunities and to minimize conflicts with existing major fixed public utilities and supporting infrastructure facilities.

The project level mitigation strategies include the following and will reduce this impact:

1. coordination with utility representatives during construction in the vicinity of critical infrastructure will occur.

The Authority finds that the mitigation strategies described above will avoid or reduce the HST system's contribution to this impact to less than cumulatively considerable.

Impact 8 Impacts on Cultural and Paleontological Resources

Implementation of the HST system could lead to a considerable contribution to the cumulative impact related to cultural and paleontological resources.

The program level mitigation strategies include the following and will reduce this impact:

1. Continued consultation with SHPO would occur to define and describe general procedures to be applied in the future for fieldwork, method of analysis, and the development of specific mitigation measures to address effects and impacts to cultural resources, resulting in a programmatic agreement between the Authority, FRA and SHPO.
2. Consultation with Native American tribes would occur.

The project level mitigation strategies include the following and will reduce this impact:

1. avoidance measures through identification of sensitive resources within the project level analysis and project design refinement and careful selection of alignments.
2. Subsequent project level field studies to verify the location of cultural resources would offer opportunities to avoid or minimize direct impacts on resources, based on the type of project, type of property, and impacts to the resource.

The Authority finds that the mitigation strategies described above will substantially lessen or avoid this impact; however, sufficient information is not available at the program-level to conclude with certainty that mitigation will reduce the HST system's contribution to this impact to less than cumulatively considerable in all circumstances. Therefore, for purposes of this programmatic EIR, this impact is considered cumulatively considerable.

Impact 9 Impacts on Geology and Soils

Implementation of the HST system could lead to a considerable contribution to the cumulative impact to geology and soils related to slope stability in various proposed locations of cut and fill and areas susceptible to slope failure; and subsidence if other projects under construction in the area also needed to dewater from the same drainage basin.

The program level mitigation strategies include the following and will reduce this impact:

1. Design practices will be used while preparing extensive alignment studies to ensure that potential effects related to major geologic hazards such as major fault crossings, oil fields, and landslide areas, will be avoided.
2. Mitigation for potential impacts will be developed on a site-specific basis, based on detailed geotechnical studies to address ground shaking, fault crossings, slope

stability/landslides, areas of difficult excavation, hazards related to oil and gas fields, and mineral resources.

The Authority finds that the foregoing mitigation strategies will reduce the HST system's contribution to this impact to less than cumulatively considerable.

Impact 10 Impacts on Hydrology and Water Resources

Implementation of the HST system could lead to a considerable contribution to the cumulative impact related to hydrologic resources.

The program level mitigation strategies include the following and will reduce this impact:

1. design practices to maximize use of existing rights-of-way to minimize potential impacts on water resources.

The project level mitigation strategies include the following and will reduce this impact:

1. Avoidance and minimization measures would be incorporated into the development, design, and implementation phases.
2. Close coordination will occur with the regulatory agencies to develop specific design and construction standards for stream crossings, infrastructure setbacks, erosion control measures, sediment controlling excavation/fill practices, and other best management practices.
3. Mitigation strategies specific to reconstruction, restoration, or replacement of the resource will occur, in close coordination with state and federal resource agencies, related to flood plains; surface waters, runoff, and erosion; and groundwater.

The Authority finds that the mitigation strategies described above will substantially reduce the HST system's contribution to this impact; however, sufficient information is not available at the program-level to conclude with certainty that mitigation will reduce the HST system's contribution to this impact to less than cumulatively considerable in all circumstances. Therefore, for purposes of this programmatic EIR, this impact is considered cumulatively considerable.

Impact 11 Impacts on Biological Resources and Wetlands

Implementation of the HST Alternative could lead to a considerable contribution to the cumulative impact related to sensitive biological resources and wetlands.

The program level mitigation strategies include the following and will reduce this impact:

1. design practices to maximize use of existing rights-of-way to minimize potential impacts on biological resources and wetlands.

The project level mitigation strategies include the following and will reduce this impact:

1. Avoidance and minimization measures would be incorporated into the development, design, and implementation phases.
2. Close coordination will occur with the regulatory agencies to develop specific design and construction standards for stream crossings, infrastructure setbacks, monitoring during construction, and other best management practices.
3. Mitigation strategies specific to reconstruction, restoration, or replacement of the resource will occur, in close coordination with state and federal resource agencies, related to wetlands.
4. Field studies would be conducted to verify the location, in relation to the HST alignments, of sensitive habitat, wildlife movement corridors, and wetlands. These studies would provide further opportunities to minimize and avoid potential impacts on biological resources through changes to the alignment plan and profile in sensitive areas. For example, the inclusion of design features such as elevated track structures over drainages and wetland areas and wildlife movement corridors would minimize potential impacts to wildlife and sensitive species.

The Authority finds that the mitigation strategies described above will substantially lessen or avoid this impact; however, sufficient information is not available at the program-level to conclude with certainty that mitigation will reduce the HST system's contribution to this impact to less than cumulatively considerable in all circumstances. Therefore, for purposes of this programmatic EIR, this impact is considered cumulatively considerable.

Impact 12 Impacts on Public Parks and Recreation Resources (Section 4(f) and 6(f) Resources)

Implementation of the HST system could lead to a considerable contribution to the cumulative impact of indirect effects related to parklands and recreational resources.

The program level mitigation strategies include the following and will reduce this impact:

1. Incorporation of sound barriers (e.g., walls, berms or trenches), visual buffers/landscaping, and modification of transportation access to/egress from the public lands and recreational resource.

2. Incorporation of design modifications or controls on construction schedules, phasing, and activities.

The project level mitigation strategies include the following and will reduce this impact:

1. Beautification measures.

2. Replacement of land or structures or their equivalents on or near their existing site(s).

3. Tunneling, cut and cover, cut and fill of right-of-ways.

4. Treatment of embankments.

5. Planting, screening, creating wildlife corridors, acquisition of land for preservation, installation of noise barriers.

6. Establishment of pedestrian or bicycle paths.

7. Other potential mitigation strategies could be identified during the public input process.

In the event that HST alignments or facilities are located within or in close proximity to public parks, the following mitigations for natural, cultural, aesthetic and recreational impacts may be considered to offset the contribution to the cumulative impact, including but not limited to:

1. Compensation for temporary and loss of park and recreation use.

2. Recordation of any historic features removed.

3. If necessary, provide alternative shuttle access service to park visitors.

4. Restore directly impacted park lands to a natural state.

5. If any facilities must be relocated, provide planning studies as well as design and appropriate replacement with minimal impact on park use.

6. Inventory and record affected historic structures. Provide appropriate mitigation for adverse effects to historic structures.

7. Require appropriate vehicle cleaning for all construction equipment used near units of the California State Park System to protect against spreading exotic plants or disease.

8. Use local native plants for revegetation.

9. Design and construct cuts, fills, and aerial structures to avoid and minimize visual impact to units of the State Park System.

10. In addressing impacts to wildlife movement corridors and habitat directly related to California State Park System units, consult with the California Department of Parks and recreation.

11. Incorporate wildlife under- or over-crossings as necessary.

12. Adopt construction practices to protect critical wildlife corridors and visitor use areas within public parks.

The Authority finds that the mitigation strategies described above will substantially lessen or avoid this impact; however, sufficient information is not available at the program-level to conclude with certainty that mitigation will reduce the HST system's contribution to this impact

to less than cumulatively considerable in all circumstances. Therefore, for purposes of this programmatic EIR, this impact is considered cumulatively considerable.

Impact 13 Impacts from Indirect Effects Related to Growth

Implementation of the HST system could result in indirect effects related to the increment of growth associated with the HST system which was projected for the period from now until 2035, recognizing that growth related to the HST system would occur in the future after early implementation steps for the HST system have been taken. As noted in Chapter 3, the EIR addressed cumulative impacts related to growth at a landscape level in Chapter 5. Incremental growth associated with the HST system would be distributed across the various communities in which HST stations are located, and would be reflected primarily in increased infill development and increased development densities in areas already slated for development in local general plans. The growth anticipated by local general plans was taken into account in the analysis in Chapter 5. At the program level, given the timeframe proposed for the construction of an HST system and the timelag in growth associated with an HST system, except as indicated in the Program EIR/EIS reasonably foreseeable future projects could not be identified for this program analysis. The incremental growth associated with the HST system is not expected to result in a significant increase in demand for municipal services. The timeframe within which incremental growth associated with the HST system would be expected is within normal planning horizons and within the purview of the local and regional agencies responsible for planning for municipal services to address.

The Authority finds that the implementation of the HST system could lead to a considerable contribution to cumulative impacts to waterways, wetlands, sensitive habitat and sensitive species associated with growth. The extent and location of such potential growth effects cannot be predicted and examined at the program-level of analysis. To assure that such potential effects will be examined in the future, the Authority will incorporate in project level studies analyses of impacts to waterways, wetlands, sensitive habitat and species based on appropriate regional study areas. In order to address cumulative impacts to such resources project level analyses must look beyond the affected project sites. To assure that appropriate planning for HST station areas is undertaken so as to avoid indirect effects associated with growth related to the HST system, the Authority has adopted the station area development strategies described in Chapter 6B of the Final EIR.

VI.
GROWTH-INDUCING IMPACTS AND INDIRECT IMPACTS RELATED TO GROWTH

Transportation investments can lead to reduced travel time or cost, improved accessibility to regions or parts of regions, or reduced accidents or air pollution. These effects contribute to economic growth by allowing time and money previously spent on travel to be used for other purposes, attracting businesses and residents to places with increased accessibility or improved quality of life, and reducing overall costs to society. The population and employment growth that result from economic growth comprise the growth-inducing effects of transportation investments such as the HST system. This growth can contribute to additional impacts beyond those directly attributable to the changes in the transportation system, which the EIR refers to as growth-related indirect impacts.

Growth-Inducing Effects of the HST System Alternative

The EIR's discussion of growth-inducing impacts was based on a multi-phased analytical process that combined the Regional Economic Models, Inc.'s macroeconomic model, with a business attraction model, an employment allocation model, and a residential spatial allocation model. The analytical process considered the potential effects that changes in transportation congestion and delay between existing conditions and future years would have on the state's economic growth, as well as the possible indirect impacts on jobs, population, and land development.

The following summarizes the analysis in the EIR:

Population Effects: Statewide population is expected to grow by about 54% between 2002 and 2035 under the No Project Alternative. Compared to the No Project Alternative, the statewide population growth is projected to be roughly 2% higher under the HST System Alternative. These population differences among alternatives represent the increased accessibility provided by the transportation investments. An investment in HST is projected to lead to greater economic growth within the state than the No Project Alternative. These statewide figures follow the same general pattern at the regional level, with the exception of the Northern Central Valley, where population growth is projected to be about 4% higher under the HST System Alternative than under the No Project Alternative.

Employment Effects: Statewide employment is expected to increase by about 46% between 2002 and 2035 under the No Project Alternative. Compared to the No Project Alternative, statewide employment growth is projected to be roughly 2% higher under the HST System Alternative.

Urbanized and Non-urbanized Areas: Urbanized areas in California are expected to grow by 48% between 2002 and 2035 under the No Project Alternative, representing an increase of about 1.5 million acres over the approximately 3.1 million acres in the existing urbanized areas in the study area of core analysis counties. These are the counties in which HST facilities would be

located, grouped by regions and excluding other California counties. Compared to the No Project Alternative, the HST System Alternative is expected to have about 0.1% less growth in urbanized areas, which is about 2600 fewer acres. The HST System Alternative compared to the Modal Alternative would use 68,100 fewer urbanized acres than the Modal Alternative. The HST System Alternative would therefore be able to accommodate more population and employment growth on less land than the No Project Alternative.

Location of Growth: The EIR provided county-level population growth rates for the No Project Alternative, Modal Alternative, and the HST System Alternative. The results show that both the Modal and HST System Alternatives may reverse the historic trend in California toward dispersed population growth, with portions of the Bay Area and Southern California exhibiting strong population growth rates. At the same time, under the HST System Alternative, Merced, San Francisco, and Sacramento counties are projected to achieve the highest growth rates. These results suggest that additional population growth under the HST System Alternative is driven by internal job growth due to the initiation of HST service, rather than due to long-term population shifts from the Bay Area and Southern California based on long-distance commuting. For the HST System Alternative, population in the Central Valley is expected to experience a small increase in both net growth and distributive effects as compared to the No Project Alternative. Because such growth would occur attendant to or after the initiation of HST service, the locations in which such growth may occur could not be predicted at this time for the programmatic analysis.

Effect of Authority Station Area Development Policies: When making decisions regarding both the final selection of station locations and the timing of station development, the Authority would consider the extent to which appropriate Station Area Plans and development principles have been adopted by local authorities. In addition to potential benefits from minimizing land consumption needs for new growth, dense development near HST stations will concentrate activity in areas conveniently located near stations. This would increase the utilization of the HST system, generating additional HST ridership and revenue to benefit the entire state. Reducing the land needed for new growth should reduce pressure for new development on nearby habitat areas and agricultural lands.

Denser development allowances would also enhance joint development opportunities at and near the station, which in turn could increase the likelihood of private financial participation in construction related to the HST system. A dense development pattern can better support a comprehensive and extensive local transit system that can serve the local communities as well as providing access to and egress from HST stations. The Authority's adopted policies will ensure that implementation of the HST in California would maximize the potential for station area development. HST station area development principles draw upon transit-oriented development (TOD) strategies that have been successfully applied to focus compact growth within walking distance of rail stations and other transit facilities. Applying TOD measures around HST stations is a strategy that works for large, dense urban areas, as well as smaller central cities and suburban areas. TOD can produce a variety of other local and regional benefits by encouraging walkable compact and infill development. Local governments would play a significant role in implementing station area development by adopting plans, policies, zoning provisions, and

incentives for higher densities, and by approving a mix of urban land uses. Almost all TOD measures adopted by public agencies involve some form of overlay zoning that designates a station area for development intensification, mixed land uses, and improvements to the pedestrian environment. TOD measures are generally applied to areas within one-half mile of transit stations and this principal would be followed for HST stations.

Indirect Effects Related to Growth from the HST Alternative

The HST Alternative may have a positive (i.e., result in an increase), but small, statewide effect on population and employment growth compared to the No Project Alternative. Despite the relatively small magnitude of the expected growth, the growth could contribute to indirect impacts on the human and natural environment. Many of these indirect, growth-related impacts derive from increased urbanization needed to accommodate the additional population and employment. However, the additional growth expected from the HST System Alternative over the No Project Alternative in 2035 is expected to be accommodated on a similar amount of land, and the growth of urbanized area in acres would be smaller under the HST System Alternative, than under the Modal Alternative.

The following summarizes the analysis in the EIR:

No indirect, growth-related impacts from implementing the HST system are expected to the following resource areas: noise and vibration; exposure to EMF or EMI; public utilities; exposure to hazardous materials or wastes; cultural resources; geology and soils; and public parks and recreation. Indirect aesthetic impacts from induced growth under the HST System Alternative are considered speculative at the programmatic level.

Overall traffic conditions are expected to improve with the HST system, despite the estimated 2% increase in population and employment under the HST System Alternative. Some increase in local traffic around HST stations, consistent with this increased growth, is expected.

Air quality is expected to improve with the HST system, however, the increased population and employment growth may contribute to increased mobile-source air pollutants due to increased traffic around stations.

There are no significant differences in energy consumption expected statewide between the HST System Alternative and the No Project Alternative when considering growth. However, the HST System Alternative could result in less overall demand for transportation energy, despite the expected small increase in growth under the HST System Alternative.

Socioeconomic changes from growth under the HST System Alternative are expected to be small, and therefore indirect land use compatibility impacts from induced growth are also expected to be small. Growth under the HST System Alternative would be distributed across various communities, would be reflected in infill development and increased development densities, and is not expected to result in a significant increase in demand for municipal services.

Planning for such services is within the purview of local and regional agencies and expected growth in the future would be within typical planning horizons for such services.

Growth under the HST System Alternative is expected to impact 4100 fewer acres of important farmland on a statewide basis than the No project Alternative.

Growth under the HST System Alternative is expected to impact about 270 miles more of waterways than the No Project Alternative, or about 7% more. The largest percentage of this increase is expected to occur in Southern California. The HST System Alternative is expected to affect fewer waterways in the Northern Central Valley region than the No Project Alternative due to induced growth. The Northern Central Valley is projected to experience a decrease in acreage of habitats potentially affected by induced growth.

Growth under the HST System Alternative has the potential to affect up to 8400 acres more of land which may contain some threatened and endangered species habitat on a system-wide basis than the No Project Alternative. The largest percentage increase is expected to occur in the Bay Area, while the largest acreage increase is expected in the Southern Central Valley. Growth under the HST System Alternative has the potential to affect about 330 acres more containing some wetlands on a system-wide basis than the No Project Alternative, or about 1% more. The largest acreage and percentage increase is project to occur in the Northern Central Valley, whereas Southern California is expected to exhibit a reduction in wetland loss due to future urbanization.

At the program level it is not possible to predict the specific location(s) where the increment of future growth related to the HST System Alternative may occur or is likely to occur in order to recommend mitigation strategies to other agencies; nor is it within the purview of the Authority to adopt such strategies. Additionally, the size, scope and attributes of specific projects that may be proposed in the future cannot be predicted, nor can the outcome of public agency approval processes and the ultimate configuration of any approved projects be predicted. However, the general requirements of CEQA, the Endangered Species Act, other measures required by the Department of Fish and Game and the permit requirements of other regulatory agencies can be expected to apply to both public and private projects in the future and to require avoidance and minimization strategies to reduce potentially significant impacts to environmental resources. These strategies can be expected to substantially reduce and avoid adverse environmental impacts to these resources.

VII.
FEASIBILITY OF POTENTIAL ALTERNATIVES

CEQA requires the lead agency, the High Speed Rail Authority, to consider a reasonable range of potentially feasible alternatives to the proposed Program. See Public Resources Code sections 21002 and 21081; see also CEQA Guidelines section 15126.6. "Feasible" means capable of being accomplished in a successful manner within a reasonable time, taking into account economic, environmental, legal, social and technological factors. CEQA Guidelines section 15364. The range of alternatives to be considered is governed by a "rule of reason" that requires the EIR to set forth only those alternatives necessary to permit a reasoned choice. The alternatives shall be limited to ones that would avoid or substantially lessen any of the significant effects of the project. Of those alternatives, the EIR need examine in detail only the ones that the lead agency determines could feasibly attain most of the basic objectives of the project. CEQA Guidelines section 15126.6(f). Additionally, CEQA does not require the consideration of alternatives that are incompatible with the fundamental objectives of the Program or alternatives that would change the basic nature of the Program. See *Save San Francisco Bay Association v. San Francisco Bay Conserv. & Dev. Commission* (1992) 10 Cal.App 4th 908, 919; *Marin Mun. Water Dist. v. KG Land Cal.Corp.*(1991) 235 Cal.App. 3d 1652.

A. Alternatives Considered and Not Taken Forward

1. Evaluation of Alternatives Against the Program Objectives, Purpose and Need

The purpose and objectives of the HST System. With the enactment of the California High Speed Rail Act in 1996, the Legislature recognized, among other things, that the state's existing network of highways and airports is not adequate to meet the mobility needs of the population, and that both the state's population and the travel demands of its citizens are expected to continue to grow at a rapid rate. Noting that an intercity high-speed rail service connected with urban transit and airports could provide an efficient, practical, and less-polluting transportation mode to help meet the gap between existing capacity and future travel demand, the Legislature charged the Authority to develop a proposed HST system that is integrated with the state's existing rail and transit services and uses common station facilities. See Public Utilities Code sections 185010, 185030.

The analysis in the Final Program EIR/EIS confirms that the capacity of California's intercity transportation system is insufficient to meet existing and future demand, and the current and projected future congestion of the system will continue to result in deteriorating air quality, reduced reliability, and increased travel times. The state's intercity transportation system has not kept pace with the tremendous increase in the population and tourism in the state. The interstate highway system, commercial airports, and the conventional passenger rail system serving the intercity travel market are currently operating at or near capacity, and will require large public investments for maintenance and expansion in order to serve existing and future demand. The need for improvements serving intercity travel within California is described further in the Final Program EIR/EIS and summarized in the October 2005 Staff Report on the Final Program EIR/EIS.

As described in the Final Program EIR/EIS the purpose and objectives of the HST System, or program, which is identified as the Preferred System Alternative, is to provide a reliable mode of travel that links the major metropolitan areas of the state and delivers predictable and consistent travel times, while also providing an interface with major commercial airports, public transit services, and the highway network and relieving capacity constraints in the existing transportation system in a manner sensitive to and protective of California's unique natural resources. It is called the Preferred System Alternative to distinguish it from the preferred alignment and station locations which are identified in the Final Program EIR/EIS. Along with the stated purpose and objectives, and to implement the directives of the California High-Speed Rail Act, the Authority adopted the following policies and objectives for the proposed HST System:

- provide intercity travel capacity to supplement critically over-utilized interstate highways and commercial airports

- meet future intercity travel demand that will be unmet by present transportation systems and increase capacity for intercity mobility

- maximize intermodal transportation opportunities by locating stations to connect with local transit, airports, and highways.

- improve the intercity travel experience for Californians by providing comfortable, safe, frequent, and reliable high-speed travel

- provide a sustainable reduction in travel time between major urban centers

- increase the efficiency of the intercity transportation system

- preserve environmental quality and protect California'ss sensitive environmental resources by reducing emissions and vehicle kilometers/vehicle miles traveled for intercity trips

- consult with resource and regulatory agencies during the tier 1 environmental review and use all available information for assessing the alternative that it most likely to yield the least damaging practicable alternative by avoiding sensitive natural resources (wetlands, habitat areas, conservation areas) where feasible

- maximize the use of existing transportation corridors and rights-of-way, to the extent feasible

- develop a practical and economically viable transportation system that can be implemented in phases by 2020, which would generate revenues in excess of operations and maintenance costs

The above policies and objectives were important in the Authority's initial broad consideration of alternatives, in considering train technologies that could provide the desired high-speed service, in framing the alternatives for analysis in the EIR, and also in selecting preferred corridor alignments and station locations, as discussed below. The Final EIR describes this process in detail. The Authority evaluated a wide range of alternative corridor alignments for the proposed system in order to determine which corridors would best meet the program objectives while also minimizing potential adverse environmental impacts. The evaluation of both alternative technologies and alternative corridors for the proposed HST system was considered by the Authority in numerous public meetings which provided extensive opportunities for public participation and input for the Authority to consider. The system alternatives and the design options (corridors/alignments and station locations) for the proposed HST system that are described in the EIR are based on previous feasibility studies, the scoping process, and the HST screening evaluation.

2. Elimination of Alternative Technology, Alternative Systems and Alternative Corridors

a. Initial Considerations

The Authority and the FRA developed a range of potential HST corridors, and alignment and station options within the corridors, informed by previously prepared feasibility studies, as well as comments received from the public and from public agencies during the scoping process for the preparation of the Draft Program EIR/EIS. The Authority reviewed the Los Angeles to Bakersfield Preliminary Engineering Feasibility Study completed by the California Department of Transportation (Caltrans) in 1994; the Corridor Evaluation and Environmental Constraints Analysis completed by the High Speed Rail Commission in 1996; the High Speed Rail Corridor Evaluation completed by the Authority in 1999; and the Authority's Business Plan, completed in 2000. The Final EIR explains in Chapter 2 the consideration of these reports and additional criteria that were applied to evaluate potential HST corridors, technologies, alignments and stations.

For purposes of organizing the information and evaluating the HST options, the state was divided in to five geographic regions or travel markets, as shown in Figure 2.1-1 of the EIR. The previously prepared studies mentioned above were reviewed and reevaluated to develop HST alignment and station options in each of the five regions. Technical studies gathered data to assist in evaluating the range of HST options, as reflected in the Authority's California High Speed Train Screening Report (2002), and provided information to help focus further studies for the Program EIR/EIS HST options to meet the project/program purpose and attain the objectives established by the Authority.

Prior to completing the screening evaluation the Authority directed specific alignment refinement studies in order to gather additional technical information to assist in its review of northern and southern mountain pass crossing options for the proposed HST system. In these mountain areas, due to the vast potential for variation in specific alignments (horizontal and vertical), and with related variation in costs and potential environmental impacts, the Authority undertook further review of tunneling considerations in a two-day technical conference and an alignment refinement and optimization study.

The range of potential HST corridors was reduced during a "screening" process in which the Authority and FRA further considered the potential HST corridors, received additional public comment during public meetings, and eliminated from detailed consideration in the EIR/EIS potential alternatives that were: (i) unable to meet most of the basic project objectives; (ii) infeasible; or (iii) unable to avoid significant environmental impacts.

b. Eliminated technology

Four primary technology groups were considered in the development of the HST System alternative. These groups were classified by their speed (both currently obtainable speeds as well as targeted speeds that may result from further research and development) and by their similar design characteristics. Three groups were eliminated from further consideration for reasons discussed in more detail in the EIR and the Authority's screening evaluation documentation. Magnetic levitation technology was eliminated principally due to the unique guideway it requires, which would not allow it to share track with conventional steel wheel systems and such separation would prevent direct HST service in certain heavily constrained urban terminus sections, e.g., San Francisco and Los Angeles. Shared use within such

constrained urban corridors would help to mitigate the impacts of adding additional tracks and would provide an opportunity for incremental improvement of portions of the existing rail network.

High-speed steel wheel on steel rail electrified technology, which is designed to operate at speeds of 100 to 150 mph (160-240 kph), and non-electrified conventional rail, which is capable of speeds up to 100 to 150 mph with diesel technology, were eliminated because they would not be able to produce the sustained speeds needed for a viable HST system in California. Studies showed that a travel time of three hours or less between San Francisco and Los Angeles would be needed in order to provide a travel time competitive with other modes and to attract riders to the system. The costs to implement the slower train technology would be similar to those for the HST system.

c. Eliminated system alternatives

The modal alternative which is considered in the EIR consists of a combination of highway and airport components, as described below. In developing the modal alternative, the Authority considered both a highway-improvement only system alternative and an airport-improvement only system alternative. These alternatives were rejected because neither would be practical or feasible to serve the range of intercity trip lengths to be served by the HST system, and neither would meet the purpose and need and objectives for the system with regard to predictable and reliable travel times, safety, and protection of natural resources through avoidance of environmental impacts. Consideration was also given to improving the conventional passenger rail system to stand alone or serve as part of the modal alternative. This was rejected because it would not provide or assist in providing a competitive option to satisfy intercity travel demand. Even with the implementation of improvements, travel time between Los Angeles and San Francisco would not be sufficiently improved (time reduced from about ten hours to eight hours and 30 minutes) for conventional to provide a competitive alternative mode and would continue to require transfer to buses for a portion of the trip.

d. Eliminated HST Corridors

The HST corridor options which were evaluated and eliminated from further consideration based on previous studies, the information provided in the screening evaluation studies, and public and agency input, are described in detail in the EIR and are listed in the staff report presented at the Authority's November 1-2, 2005, meeting in Table 2.6-3 which notes the primary reason(s) for elimination of the corridors. The eliminated corridors include a San Francisco to Los Angeles only corridor, which would not meet the objective of linking the major metropolitan areas of the state; coastal corridors generally following Highway 101 and Highway 1, which would result in greater impacts to sensitive natural and cultural resources, higher costs and slower travel due to challenging topography waters; and an Interstate Highway 5 corridor, which failed to meet basic project objectives of maximizing intermodal opportunities, maximizing connectivity and accessibility, and providing transit connections and multi-modal stations, and additionally would result in increased incompatibility with land use planning. Also eliminated were the Capitol Rail Corridor (Sacramento to Oakland) and the Panoche Pass because they would not meet basic project objectives. For additional discussion of these corridors see chapter 2 in the EIR.

Additional HST alignment and station options were evaluated and eliminated from further consideration in the EIR as a result of the Authority's screening process, which consisted of using the objectives and criteria established by the Authority to identify reasonable and practicable options for further investigation in the Program EIR. Briefly described, the criteria used for this evaluation are the following, which are presented and described in more detail in the EIR:

- maximize ridership/revenue potential
- maximize connectivity and accessibility
- minimize operating and capital costs
- maximize compatibility with existing and planned development
- minimize impacts on natural resources
- minimize impacts on social and economic resources
- minimize impacts on cultural and parks/wildlife refuge resources
- maximize avoidance of areas with geologic and soil constraints
- maximize avoidance of areas with potential hazardous materials

In addition the Authority's performance criteria were applied. Using cost and travel time as primary indicators of engineering viability and ridership potential, capital costs and travel times were estimated and quantified for the options considered. Other engineering criteria, such as operational, construction, and right of way issues, and environmental concerns were evaluated qualitatively. The HST alignment and station options eliminated through the screening evaluation are discussed in detail in Section 2.6.9 of the Final Program EIR/EIS, are listed in Table 2.6-6 in the EIR and in the October 2005 Staff Report, and are depicted in maps included in Section 2.6.9 of the EIR.

3. Elimination of Alternatives Recommended in Comments that Would Not Meet One or More Primary Program Objectives

a. Other Technologies

A few comments on the Draft EIR suggested that technologies other than those investigated be used for the HST System. However, these other technologies are, without exception, unproven, largely conceptual technologies which have not been tested in service. These technologies include the suggested "Underground Express" technology (e.g., see comment letter I003 in the Final EIR) and other conceptual concepts for intercity transportation. These technologies cannot be used for the construction of an HST System within an appropriate timeframe to be in service by the year 2020, and are not assured of being able to share infrastructure in the very constrained urban areas within the Preferred HST System Alternative. The Authority finds these technologies are infeasible to meet the purpose and objectives for the program.

b. Other Routes

Some comments suggested other route ideas for the proposed HST System, i.e., additional routes and destinations beyond the major metropolitan areas discussed in the EIR and identified as part of the Preferred HST System Alternative. For example, suggestions included routes to the

Imperial Valley, to areas north of Sacramento, to Mexico, etc. Additional routes could be considered in the future based upon further environmental and economic analyses, but are not proposed at this time as part of the HST System. Such additional routes do not meet the program objectives of serving the state's major metropolitan areas. Further, these routes do not meet the objective of providing economically viable transportation system that would generate revenues in excess of operations and maintenance costs, and they could result in substantial additional environmental impacts. The Authority finds these additional routes are infeasible to meet the purpose and objectives of the initial HST Program.

B. Comparison of Alternatives Studied in the EIR

These findings compare all alternatives considered in the EIR where appropriate in order to provide a basis for selection of the finally approved Preferred System Alternative. In rejecting certain alternatives, the Authority has considered the purpose and need and basic program objectives and weighed the ability of the various alternatives to meet these objectives. While each alternative represents trade-offs, the Preferred HST System Alternative strikes a balance of benefits while considering environmental impacts, uncertainty, and other factors.

The discussion that follows compares the No Project Alternative and the Modal Alternative to the Preferred HST System Alternative on the basis of the relative ability of each alternative to meet program purpose and objectives, to reduce or avoid potential environmental impacts and its practicability. The Preferred HST System Alternative is described more fully in Chapter 2 of the Final Program EIR/EIS, Section II of these Findings, and in Subsection C below. The purpose of this comparison of alternatives is to highlight the changes to the environment that would take place as a result of implementing the different system alternatives.

1. Comparison to No Project Alternative

The No Project Alternative consists of the state's transportation system (highway, air, and conventional rail) in 1999-2000 and as it would be after the implementation of improvements, programs or projects, that are currently projected in regional transportation plans (RTPs), for which implementation funds have been identified, and that are expected to be in place by 2020 in the same general geographic area that would be served by the proposed HST System.

Compared to the No Project Alternative and existing conditions, the Preferred HST System Alternative provides significant improvements in terms of air quality, energy efficiency in transportation uses, reduced overall fuel use, and improving travel conditions (including mobility, reliability, safety, connectivity, travel times, and capacity). Air quality improvements with the HST System Alternative would result from reduced VMT for intercity travel and from reduced congestion. The No Project Alternative would not meet the intercity travel needs projected for the future (2020 and beyond) as population continues to grow. Under the No Project Alternative fuel use and congestion would increase, along with travel delays and air quality impacts, and travel times would be longer and less reliable than under existing conditions. Peak travel time congestion would be significantly extended in some areas of the system under the No Project Alternative. The No Project Alternative would not produce

improvements in connectivity with and access to public transit or otherwise serve to increase integration of the transit system. Under the No Project Alternative intercity travel would remain subject to limited flexibility and reliability related to weather events, congestion and accidents. The No Project Alternative would result in adverse environmental impacts on air quality, energy use, and other resources, but would not offer travel improvements compared to the HST System Alternative.

After full consideration of the No Project Alternative, as discussed in the EIR/EIS, the Authority finds that taking no action under the No Project Alternative would not meet the intercity travel needs projected for the future (2020) as population continues to grow, and would fail to meet purpose and need, and would fail to meet the objectives of a statewide HST system. The No Project Alternative would result in an intercity transportation network that would not be as safe as, would have increased travel times, and would be significantly less reliable than existing conditions. The No Project Alternative would also exacerbate existing transportation system constraints, energy use, and dependence on petroleum as demand for intercity travel in California increases. The No Project Alternative would result in environmental impacts but would not offer travel improvements compared to the Modal and HST Alternatives. The No Project Alternative is neither a viable nor realistic alternative for California's future intercity travel demands. For these reasons the Authority rejects the No Project Alternative.

2. Comparison to Modal Alternative

The Modal Alternative consists of a combination of future transportation improvement options in both the highway and aviation modes of intercity travel. Because the majority of intercity travel is split between aviation and highway modes, the Modal Alternative consists of hypothetical improvements to the highway and aviation system that were identified based on an appropriate forecast of representative demand for each modes and designed to provide a quantifiable capacity improvement equivalent to the capacity that would be provided by the HST System Alternative to meet a representative demand for intercity trips (58 million) and some commuter trips (10 million) as described in Chapter 2 of the Final Program EIR/EIS.

The capacity improvements included in the Modal Alternative are considered hypothetical and have been reviewed at the program-level of the analysis for their potential feasibility in order to provide a comparison of potential environmental impacts from a system of theoretical improvements which could serve the same level of intercity travel demand as could be served by the proposed HST system. Such improvements, however, are not proposed by the Authority, nor are they within the Authority's purview to pursue or to implement.

The Modal Alternative would meet the projected needs for intercity travel in 2020 and would result in reduced highway travel times and congestion as compared to both the No Project and HST Alternatives. However, congestion would still increase on highways and airports compared to existing conditions for both the Modal and HST Alternatives. The Modal Alternative would also create slightly fewer impacts to visual quality resources as compared to the Preferred HST System Alternative.

The Modal Alternative would create somewhat greater impacts on air quality, noise, biology and wetlands, cultural resources, hydrology, water quality, and land uses, both from construction and operations, as compared to the Preferred HST System Alternative. The Modal Alternative would also result in increased energy use, continued reliance on petroleum and would contribute to increases in suburban sprawl. The Modal Alternative would provide an intercity transportation network that would not be as safe or as reliable as the HST System Alternative and would not improve connectivity between exiting modes.

The capital cost of the Modal Alternative would be over two times the estimated capital cost of the HST System Alternative, yet the Modal Alternative would have considerably less sustainable capacity than the HST System Alternative to serve California's intercity travel needs beyond 2020. Improvements within the Modal Alternative represent fixed additional capacity to the transportation system, whereas with the same basic system infrastructure and with little, if any, additional construction, and related impacts, the capacity of the Preferred HST System Alternative can be expanded, e.g., by the addition of trains for more service or longer trains for greater capacity at certain times and locations.

Finally, while the improvements for the Modal Alternative were reviewed for their potential feasibility in order to prepare an appropriate comparative impact analysis at the program level, there is no assurance that these improvements would be proposed, implemented or funded by the agencies responsible for the affected facilities within the time frame for the implementation of the Preferred HST System Alternative.

The Authority has fully considered the Modal Alternative discussed in the Final Program EIR/EIS. The Authority finds that while the Modal Alternative would meet the projected intercity travel needs for 2020, it would be much less effective that the Preferred HST System Alternative in doing so and it would result in significant environmental impacts. The Modal Alternative would not meet objectives related to interconnecting transit services and increasing the efficiency of the transportation system, would not meet objectives related to reducing VMT and improving air quality, and would not improve energy efficiency in transportation use.

For the above reasons the Authority rejects the Modal Alternative.

3. Conclusion

For the above stated reasons the Authority rejected the No Project Alternative and the Modal Alternative. The Authority finds that the Preferred HST System Program Alternative is more effective in meeting the program objectives within the time frame needed and would result in fewer adverse impacts than the Modal Alternative. The Preferred HST System Alternative is also more effective in meeting the program objectives than the No Project Alternative and would result in energy savings, air quality improvement and transportation capacity improvements, as compared to the No Project Alternative. In addition to meeting the program objectives the Preferred HST System Alternative would also provide environmental benefits in the form of increased efficiency in energy use for transportation, decreased energy consumption [e.g., oil fuels consumption], improved air quality, improved travel conditions (including mobility, safety, reliability, travel times, and connectivity and accessibility) and reduced vehicle-miles-traveled

for intercity trips. Given the environmental benefits it would provide, the Preferred HST System Program Alternative is the environmentally superior alternative among all of the alternatives considered, including the No Project Alternative.

C. Benefits of the Preferred Program Alternative

As noted above, expected increases in population and intercity travel demand in California will result in increased travel times, increased vehicle-related air pollution emissions, increased congestion and delays, while transportation flexibility, reliability and safety will likely decline in the future. The proposed HST system is the Preferred Program Alternative and is most effective in meeting the program purpose and objectives in order to provide a new mode of transportation to help meet increasing demand for intercity travel while connecting with public transit and other travel modes and protecting sensitive environmental resources.

The Preferred HST System Alternative consists of a system over 700-miles long capable of sustained speeds of 200 mph with electric-powered steel-wheeled trains on a mostly dedicated system of fully grade-separated, access-controlled steel tracks with state-of-the-art safety, signaling, communication and train control systems which would connect the major metropolitan areas of the state and connect with other transportation modes at multi-modal stations. The Preferred HST System Alternative meets the multiple objectives set forth for the program, reduces adverse environmental effects, and provides multiple benefits, including the following:

- New safe, reliable mode of intercity travel with competitive travel times.
- Improved connectivity and accessibility to other travel modes.
- Air quality improvements from reduced VMT for intercity trips, grade-separated crossings that remove local traffic delays and decreased congestion.
- Reduced energy consumption and increased energy efficiency in transportation.

- Multi-modal hub stations that support transit oriented development and increased land use efficiency to decrease sprawl and decrease urban area growth.
- Increased intercity travel options, particularly in the Central Valley.
- Opportunities for expanded service and capacity with little infrastructure change.
- Noise reductions where grade separations result in removing train horn noise.

As proposed, the Preferred HST System Alternative would largely use existing transportation corridors and railroad rights of way in order to minimize impacts to environmental resources. The Authority has adopted design practices to be included in the Preferred HST System, and to be applied in the next steps of planning for the HST System, that would further minimize and avoid adverse environmental impacts described in Section IV of these findings. These design practices are described in the foregoing findings and in the Final EIR, and are incorporated into the Preferred HST System Alternative.

In addition to incorporating design practices to minimize potential impacts, the Authority has adopted mitigation strategies to avoid or minimize adverse environmental impacts described in Section IV of these Findings. The adopted mitigation strategies will be refined and applied in

future project-level studies as site specific mitigation measures to address the potential impacts of proposed alignments at locations identified with more specificity than is possible at the program-level of analysis. The Authority finds that the Preferred HST System Alternative incorporates all feasible mitigation strategies identified at the program-level of analysis and that the Preferred HST System Alternative with the identified design practices and mitigation strategies best meets the purpose and objectives of the program while minimizing and avoiding environmental impacts. The design practices and mitigation measures will be refined and applied further during project level studies, and in project level studies additional mitigation measures may be identified and applied. Due to uncertainty from the fact that these mitigation strategies cannot be fully defined at the program-level and, thus, their ability to reduce potential impacts cannot be fully measured at the program level, the Authority finds that the Preferred Program Alternative could result in significant and unavoidable impacts. Accordingly a statement of overriding considerations has been prepared and included in these Findings.

D. Selection of Preferred Corridor Alignments and Station Locations

Chapter 6A of the EIR/EIS identifies HST alignment and station location preferences based upon information contained in the EIR/EIS, supporting technical reports, and comments received from agencies and the public. In identifying preferred alignment and station locations the Authority has considered the relative differences among alignments and station locations within each of the conceptual corridors studied with regard to physical and operational characteristics, and potential environmental impacts. The Authority was guided by the objectives and criteria applied for the screening evaluations which is summarized above [Table 2.6-5 in the EIR], in considering the more detailed information provided by the EIR/EIS. Staff reports presented to the Authority in public meetings provided detailed information concerning the relative differences between the alignment and station locations being considered and made recommendations for selection of those that would best satisfy the screening evaluations. In considering station locations, the Authority was seeking multi-modal hub locations.

The Authority reviewed the staff recommendations, and approved them with a few modifications as preferred alignment and station locations to be identified in the Final EIR. Further review during the preparation of the Final EIR resulted in slight changes broadening the study areas described for future analysis in three locations [inclusion of the CCT alignment between Sacramento and Stockton, additional planning studies for a potential Visalia station, and defining the segment between Burbank to LAUS as a relatively wide corridor]. In its action approving staff recommendations, the Authority approved the identification of a broad corridor for the HST segment linking the Bay Area with the Central Valley for further study of potential northern mountain crossing alignment options, excluding routes crossing Henry Coe State Park. By selecting these preferred alignment and station locations the Authority is indicating it does not intend to investigate further in project level studies the alignment and station options that have <u>not</u> been identified as preferred. After future study of the broad northern mountain corridor along with connections in the Bay Area and the Central Valley, the Authority intends to identify a preferred northern mountain crossing alignment. The preferred alignment and station locations are identified conceptually to indicate the locations for future more specific study that will provide the information needed to determine precise alignment and station locations. The Authority approves the preferred alignment and station locations, as identified in Chapter 6A of

the Final EIR, to be the focus of future more detailed studies to implement the Preferred HST System Alternative.

VIII.
STATEMENT OF OVERRIDING CONSIDERATIONS

The program-level environmental impact report/ environmental impact statement (EIR/EIS) prepared for the California High-Speed Train (HST) project concluded that significant and unavoidable impacts would occur as a result of the proposed project. In keeping with CEQA Section 21081 and the requirements of the State CEQA Guidelines 15093, this statement of overriding considerations has been prepared. The significant and unavoidable impacts and the benefits related to the HST project are described below. The California High-Speed Rail Authority (Authority) Board has weighed these impacts and benefits of the HST system. As described below, the Authority has found that the transportation, environmental, economic, and social benefits of the HST project outweigh the significant and unavoidable environmental impacts.

The level of analysis provided in this program EIR is less detailed than that typically provided in a project-level EIR, such as for approval of a development project like a hotel at a particular location. Because a program EIR necessarily provides less detailed analysis and less detail concerning mitigation measures, it is more difficult to conclude with certainty that the inclusion of identified mitigation measures or strategies in the program approval will necessarily reduce adverse impacts to a less-than-significant level. For example, the program EIR notes that implementing the train system would result in some loss of agricultural land (i.e., conversion of land currently in agricultural use to urban use), but it cannot be determined at the program level of analysis exactly where and how much agricultural land would be needed for the train system. For such areas of uncertainty, a statement of overriding considerations is needed.

General Findings

Potentially significant/unavoidable impacts associated with the following resource areas might occur as a result of the HST System Alternative:

- Land Use:
  - Incompatibility with Land Uses and Disruption to Communities
  - Impacts to Neighborhoods During Construction
- Agricultural Lands:
  - Conversion of prime, statewide important, and unique farmlands, and farmlands of local importance, to project uses
- Aesthetics and Visual Resources
- Cultural and Paleontological Resources
  - Impacts to Archaeological Resources and Traditional Cultural Properties
  - Impacts to Historic Properties/Resources
  - Impacts to Paleontological Resources
- Biological Resources and Wetlands

- Impacts to Sensitive Habitat and Sensitive Vegetation Communities
  - Impacts to Wildlife Movement Corridors
  - Impacts to Non-wetland Jurisdictional Waters
  - Impacts to Wetlands
  - Impacts to Marine and Anadromous Fishery Resources
  - Impacts to Special Status Species
- Public Parks and Recreation Resources—Impacts to Parks and Recreational Resources

Overriding Considerations

The Authority has determined that the need for a high-speed train system is directly related to the expected growth in population and resulting increases in intercity travel demand in California over the next twenty years and beyond. As a result of this growth in travel demand, there will be increases in travel delays from the growing congestion on California's highways and at airports. In addition, there will be effects on the economy and quality of life from a transportation system that is less and less reliable as travel demand increases and from deteriorating air quality in and around California's metropolitan areas. The intercity highway system, commercial airports, and conventional passenger rail serving the intercity travel market are currently operating at or near capacity, and will require large public investments for maintenance and expansion in order to meet existing demand and future growth.

The proposed high-speed train system would provide a new mode of high-speed intercity travel that would link the major metropolitan areas of the state; interface with international airports, mass transit, and highways; and provide added capacity to meet increases in intercity travel demand in California projected for the year 2020 and beyond in a manner sensitive to and protective of California's unique natural resources.

The evaluation and findings indicate that the Modal Alternative, improvement to existing highway and air modes of intercity travel, would help meet projected needs for intercity travel in 2020, but would not satisfy the purpose and objectives of the program as well as the HST alternative. In addition, although the capital cost of the Modal Alternative would be over two times the estimated capital cost of the HST Alternative, the Modal Alternative would have considerably less sustainable capacity than the HST Alternative to serve California’s intercity travel needs beyond 2020.

The evaluation and findings of the Final Program EIR/EIS also indicate that taking no action under the No Project Alternative would not meet the intercity travel needs projected for the future (2020 and beyond) as population continues to grow, and would fail to meet the purpose and objectives of the program which can be met by the Preferred HST Alternative. The No Project Alternative would result in environmental impacts but would not offer travel improvements compared to the Modal and HST Alternatives.

As informed by the analysis presented in the Draft Program EIR/EIS, public and agency comments, and additional analysis described in the Final Program EIR/EIS, the Authority and

the FRA have concluded that the HST alternative is the preferred system alternative and have identified preferable alignments and stations. In addition, the HST Alternative is identified as environmentally preferable under NEPA as well as the environmentally superior alternative under CEQA.

BENEFITS OF THE CALIFORNIA HIGH-SPEED TRAIN SYSTEM

Benefits to the Transportation System

Highway traffic conditions are currently highly congested and are projected to further deteriorate under the No Project Alternative. In every region studied, the No Project Alternative would not add sufficient capacity to accommodate the projected growth in highway travel, including both the existing large urban areas (i.e., the San Francisco Bay Area and Los Angeles basin) and the growing urban areas in the Central Valley. Future forecast increases in travel demand will lead to greater congestion, increased total travel time delay, and reduced reliability on the primary highway corridors throughout the study area. Of the highway segments analyzed, over half are already operating beyond their capacity with "stop-start" conditions during peak periods, and congestion is estimated to increase by nearly 40% under the No Project Alternative. Between Los Angeles and Bakersfield, highway traffic congestion is forecasted to increase by over 70%, with portions of I-5 burdened during peak periods with more than three times the volume of traffic than highway capacity to carry it. Typically, this would cause the morning peak period of congestion in urban areas to extend from two hours under existing conditions, to four hours by 2020. Because this program-level analysis could not attempt to quantify localized capacity restriction (e.g., bottlenecks at given interchanges) and incidents on the highways—accidents, breakdowns, and highway maintenance that are unpredictable and are responsible for a majority of the congestion on California's urban highway networks—congestion would be likely considerably greater than forecast under the No Project Alternative.

Likewise, many of the airports in the study area are currently at or near capacity and could become severely congested under the No Project Alternative. The number of passengers that enplaned and deplaned in California in 1999 (almost 173 million) is expected to more than double by 2020. However, the aviation component of the No Project Alternative consists primarily of additional gates, access improvements, and parking expansion. No additional runways or other major capacity expansion projects are included. Capacity constraints are likely to result in considerable future aircraft delays, particularly at California's three largest airports.[1] San Francisco International Airport (SFO) has "one of the worst flight delay records of major U.S. airports—only 64 percent of SFO flights were on time during 1998."[2] According to the Web site for SFO, within 10 years, the three Bay Area airports will not, even during good weather, have sufficient capacity to meet regional air traffic demand. Los Angeles International Airport projects a demand of 19.2 million more annual passengers than their 78.7 million total passenger capacity by 2015, and San Diego International-Lindbergh Field expects to be at

[1] California High Speed Rail Commission 1996. Working Paper #3, Cost Comparison of Mode Alternatives. June 20.

[2] San Francisco International Airport. 2003. Building the future. Available at: <www.flysfo.com>. Accessed: December 2003.

capacity prior to 2020.[3] The projected delays at heavily used airports and forecasted highway congestion would continue to delay travel, negatively affecting the California economy and quality of life.

The HST System Alternative would meet the need for a safe and reliable mode of travel that would link the major metropolitan areas of the state and deliver predictable, consistent travel times sustainable over time. The HST System Alternative also would provide quick, competitive travel times between California's major intercity markets. Table S.5-1 shows examples of door-to-door travel times between several city-pairs for 2020, comparing the automobile and air transportation travel times estimated for the No Project Alternative to the travel times estimated for the HST System Alternative. For longer distance intercity markets such as San Francisco to Los Angeles, the HST System Alternative would provide door-to-door travel times that would be comparable to air transportation and less than one half as long as automobile travel times. For intermediate intercity trips such as Fresno to Los Angeles, the HST System Alternative would provide considerably quicker travel times than either air or automobile transportation, and would bring frequent HST service to many parts of the state that are not well served by air transportation. In addition, the passenger cost for travel via the HST service would be lower than for travel by automobile or air for the same intercity markets.

The HST System Alternative would provide a new intercity, interregional, and regional passenger mode—the high-speed train—, which would improve connectivity and accessibility to other existing transit modes and airports compared to the other alternatives. The proposed HST system is the only alternative that would improve the travel options available in the Central Valley and other areas of the state with limited bus, rail, and air service for intercity trips. The HST system also provides system redundancy in cases of extreme events such as adverse weather or petroleum shortages (HST trains are powered by electricity which can be generated from non-petroleum or petroleum-fueled sources; automobiles and airplanes currently require petroleum). The HST System Alternative would provide a predominantly separate transportation system that would be less susceptible to many factors influencing reliability, such as capacity constraints, congestion, and incidents that disrupt service. In addition, since high-speed trains are able to operate in all weather conditions, the on-time reliability of this mode of travel would be superior to travel by either auto or air. Based on experience with HST systems in other countries, HST has a lower accident and fatality rate than automobile travel. In terms of sustainable capacity, the HST System Alternative would offer greater opportunities to expand service and capacity with minimal expansion of infrastructure, than either the No Project or Modal Alternatives.

[3] San Diego Airport. 2001. The San Diego Airport Economic Analysis and Public Information Program. San Diego, CA.

Table S.5-1
Estimated Total Travel Times (Door to Door) between City Pairs by Auto, Air, and HST in 2020 (Hours:Minutes)

City Pairs	Auto[1] (No Project Alternative)	Air (No-Project Alternative)		HST (HST Alternative) (Optimal Express Time)	
	Total	Line Haul[2]	Total	Line Haul[2]	Total
Los Angeles downtown to San Francisco downtown	7:57	1:20	3:32	2:35	3:30
Fresno downtown to Los Angeles downtown	4:30	1:05	3:02	1:22	2:33
Los Angeles downtown to San Diego downtown	2:49	0:48	3:00	1:13	2:16
Burbank (Airport) to San Jose downtown	6:50	1:00	3:14	1:49	2:52
Sacramento downtown to San Jose downtown	2:40	No service	No service	0:50	1:53

Auto trips are assumed to be "point to point" and therefore do not have a line-haul (time in vehicle) time associated with their travel times.
Time in airplane or train.
Source: Parsons Brinckerhoff.

The HST System Alternative would add capacity to the state's transportation infrastructure and reduce traffic on certain intercity highways and around airports to the extent that intercity trips are diverted to the HST system. It also would eliminate delays at existing at-grade crossings where the HST system would provide grade separation. The HST System Alternative would reduce travel time, improve reliability, and divert auto and air traffic and thereby reduce highway congestion. The HST System Alternative also would decrease injuries and fatalities due to diversion of trips from highways, improve connectivity, and add a variety of connections to existing modes, additional frequencies, and greater flexibility.

Benefits to the Environment

The Authority has made a serious commitment to utilize existing transportation corridors and railroad rights of way to minimize the impacts on California's treasured landscape. Furthermore, a key objective to avoid and/or minimize the potential impacts to cultural, park, recreational and wildlife refuges has been largely met. The preferred HST alignment and station locations best meet the objectives and criteria for minimizing potential environmental impacts while maximizing HST ridership potential and connectivity and accessibility.

The USEPA and USACE have participated in the development of both the Draft and Final Program EIR/EIS and in accordance with the memorandum of understanding among Federal agencies for this environmental review, were consulted concerning the selection of the preferred corridor and route most likely to yield the least environmentally damaging practicable alternative (LEDPA) and as identified as preferred in the Final Program EIR/EIS. The USEPA and USACE have concurred that the preferred HST alignment and station options identified in the Final Program EIR/EIS are most likely to contain the LEDPA.

The HST System Alternative would provide air quality, energy consumption, and noise benefits. The HST system would decrease air pollutants statewide and in all air basins analyzed by reducing pollution generated by automobile combustion engines. This reduction would be a result of decreased vehicle miles traveled by automobiles and decreased automobile congestion.

The HST system would also lower total energy consumption because a HST system uses less energy to move passengers than either airplanes or automobiles: the HST system would use about one-third the energy needed by an airplane, about one-half the energy needed by an automobile for an intercity automobile trip, and one-fifth the energy needed by an automobile for a commuter automobile trip.

In addition, noise reduction would occur in locations where grade separations eliminate horn and crossing gate noise at existing grade crossings.

Land Use Planning Benefits

The HST System Alternative would be highly compatible with local and regional plans that support rail systems and transit-oriented development (TOD) and would offer opportunities for increased land use efficiency (i.e., higher density development and reduced rate of farmland loss). The HST System Alternative would also meet the need for improved inter-modal connectivity with existing local and commuter transit systems. In contrast, the highway improvement options under the Modal Alternative would encourage dispersed patterns of development and would be inconsistent with the objectives of many local and regional planning agencies to promote transit-oriented, higher-density development around transit nodes as the key to stimulate in-fill development that makes more efficient use of land and resources and can better sustain population growth. Urbanized areas in California are expected to grow by 47% between now and 2035 under the No Project Alternative. Under the Modal Alternative, urbanized area growth is expected to be about 1.4% (65,500 ac [26,507 ha]) higher than the No Project Alternative, while the HST System Alternative would result in a slight decrease in urban area growth (2,600 ac [1,052 ha]) compared to the No Project Alternative. However, the HST System Alternative is expected to result in a slightly greater increase in population than the No Project and Modal Alternatives.

HST stations in California will be multi-modal transportation hubs. All the selected high-speed rail station locations would provide linkage with local and regional transit, airports, and highways. In particular, convenient links to other rail services (heavy rail, commuter rail, light rail, and conventional intercity) will promote TOD at stations by increasing ridership and pedestrian activity at these “hub” stations. A high level of accessibility and activity at the stations can make the nearby area more attractive for additional economic activity. Most of the

potential stations identified for further evaluation are located in heart of the downtown/central city area of California's major cities minimizing potential impacts on the environment and maximizing connectivity with other modes of transportation. These locations also would have the most potential to support infill development and TOD.

Increased density of development in and around HST stations provides a means to increase public benefits beyond the benefits of access to the HST system itself. Such benefits could include relief from traffic congestion, improved air quality, promotion of infill development and preservation of natural resources, increased stock of affordable housing, promotion of job opportunities, reduction in energy consumption, and improved cost-effectiveness of public infrastructure. The Authority and local government working together will need to determine which mechanisms best suit each community and could be implemented to enhance the benefits possible from potential HST station development.

Significant growth is expected in large areas of California with or without an HST system. The proposed HST system, however, would be consistent with and promote the State's adopted smart growth principles,[4] and should be a catalyst for wider adoption of smart growth principles in communities near HST stations. It should encourage infill development, help to protect environmental and agricultural resources by encouraging more efficient land use, and encourage efficient and compact development, along with infrastructure that provides adequate transportation and other utilities and minimizes ongoing cost to taxpayers.

Economic Benefits

The HST System Alternative would generate economic benefits related to revenue generated by the system, economic growth generated by construction and operation of the system, benefits from reduced delays to air and auto travelers, reduced air pollution, reduced accidents and fatalities and economic advantages related to proximity to the HST system.

According to the Authority's Business Plan (June 2000), the market for intercity travel in California that the high-speed train system can serve is projected to grow by almost 40 percent over the next 20 years. By the year 2020, the HST system is forecast to carry at least 32 million intercity passengers and generate $888 million in revenue (calculated in 1999 dollars). This revenue will more than cover operating costs, resulting in an annual surplus of nearly $340 million, while using HST fares significantly lower than current airfares. Moreover, the benefit-cost analysis done as part of the Business Plan concluded that through the year 2050, direct benefits from HST would be more than twice the costs.

The Business Plan estimated that the construction of the HST system would generate the equivalent of almost 300,000 job-years of employment. In addition, the construction spending is estimated to generate in present value more than $11 billion in personal income, almost $28 billion in industrial output, and $871 million in tax revenue. The industries in California that are expected to benefit most are construction ($10.4 billion in total added output), services ($6.6 billion in added output), and manufacturing ($2.7 billion in added output). Also, the system

[4] As expressed in the Wiggins Bill (AB857, 2003), and in government code 65041.1

would generate thousands of permanent jobs through the ongoing operations of high-speed trains.

The Business Plan concluded that Californians who continue to travel by air and automobile will also benefit from the HST system. By diverting some passengers to high-speed trains, the system will reduce the otherwise expected delays in major airports and highways. Reductions in airport delay will, in turn, reduce aircraft operating costs. At California's nine largest airports, the present value of these benefits is estimated at over $12 billion. Benefits to automobile users (both intercity and commuter) are estimated at over $13.6 billion.

Although the HST System Alternative would induce slightly more economic growth than the No Project or Modal Alternative, the HST System Alternative is forecasted to result in denser development, which would accommodate more population and employment on less land. The HST Alternative would result in a slight decrease in urban area growth and a statewide increase of 450,000 jobs over the No Project Alternative and 200,000 jobs over the Modal Alternative between 2002 and 2035.

Experiences in other countries have shown that an HST system can provide a location advantage to those areas that are in proximity to an HST station because an HST system would improve accessibility to labor and customer markets, thereby potentially improving the competitiveness of the state's industries and the overall economy. Businesses that locate in proximity to an HST station could operate more efficiently than businesses that locate elsewhere. This competitive advantage may be quite pronounced in high-wage employment sectors that are frequently in high demand in many communities.

Social Benefits

The HST System Alternative would provide a new intercity, interregional, and regional passenger mode that would improve connectivity and accessibility to other existing transit modes and airports compared to the other alternatives. HST would improve the travel options available in the Central Valley and other areas of the state with limited bus, rail, and air service for intercity trips and the passenger cost for travel via the HST service would be lower than for travel by automobile or air for the same intercity markets.

According to the Business Plan, an HST system would provide an opportunity for some people who would not otherwise make trips to do so, e.g., where travel options are currently limited. In addition, high-speed rail is a mode of transportation that can enhance and strengthen urban centers. In combination with appropriate local land use policies, the increased accessibility afforded by the high-speed service could encourage more intensive development and may lead to higher property values around stations.

Conclusion

Although the HST System Alternative would have potentially significant environmental impacts on resources, including noise, biology, wetlands, and farmlands, the HST System Alternative would have distinct benefits in travel conditions, land use planning, energy savings, and reduced air emissions. In addition, although the HST System Alternative would induce slightly more

economic growth, the HST System Alternative is forecasted to result in denser development, which would accommodate more population and employment on less land. The HST System Alternative would result in a slight decrease in urban area growth and a statewide increase of 450,000 jobs. The HST System Alternative is identified as environmentally preferable under NEPA as well as environmentally superior under CEQA.

The Authority has found that the transportation, environmental, land use, economic, and social benefits of the HST project outweigh the significant and unavoidable environmental impacts. This statement of overriding considerations is based on the Authority Board's review of the Final Program EIR/EIS and other information in the administrative record.

APPENDIX **C**

2005 MITIGATION MONITORING AND REPORTING PLAN

AVAILABLE ON THE CALIFORNIA HIGH-SPEED RAIL AUTHORITY WEBSITE:
http://www.cahighspeedrail.ca.gov/library.aspx

Mitigation, Monitoring, and Reporting Plan for the California High-Speed Rail Program EIR/EIS

This mitigation, monitoring, and reporting plan is designed to fulfill Section 21081.6 of the California Environmental Quality Act (CEQA), which requires public agencies to adopt a reporting or monitoring program whenever a project or program is approved that includes mitigation measures identified in an environmental document. The mitigation strategies described below are for a program-level decision and are to be used to avoid, minimize, or reduce any potentially significant environmental impacts. Project-level activities will undergo future environmental analysis as required by NEPA and CEQA tiering from this EIS/EIR. As part of these second-tier environmental reviews, the lead agency for each of these projects will use the mitigation strategies identified in the program document as starting points to determine their applicability to a specific project and to develop additional mitigation measures for significant adverse impacts identified in the project-specific analysis. Because all the potential actions and impacts for tiered projects cannot be anticipated at a programmatic level, each project needs to select those strategies applicable to the impacts associated with the specific location and type of action. For purposes of CEQA, the mitigation strategies in the Final EIS/EIR also serve as mitigation measures at a programmatic level. The NEPA/CEQA monitoring process includes review, guidance, and reporting components. The lead agencies for second tier documents will note which applicable programmatic mitigation strategies are being adopted and used for mitigation measures and explain why others are not. The lead agencies will provide a schedule for implementing the adopted mitigation measures and for reviewing the implementation of those measures.

As a programmatic-level document, the Program EIR/EIS does not analyze site-specific impacts of potential alignments or stations; therefore, it cannot predict with certainty which impacts will occur and what site-specific mitigation measures are appropriate for the second-tier level of actions. Consequently, the Program EIR/EIS describes mitigation strategies that are approaches tailored to address the types of impacts anticipated as a result of construction of the HST system. These strategies will provide the basis to structure more site-specific measures when more detailed data on the impacts is available at the second-tier. In addition, the Authority has committed to design practices and policies that will be used to develop alignment alternatives at the project-level to avoid impacts and to help shape specific mitigation measures.

At this program level of planning, the Authority is responsible for tracking the mitigation and incorporating it into future studies that it undertakes, but a monitoring plan cannot yet be developed. For the next tiers of environmental analysis, a monitoring plan will be developed as part of each project-level analysis that includes more specific timing for the mitigation measures, and additional parties may be identified with responsibility for implementing the measures.

Resource Area	Impact Area	Mitigation Measure
Traffic and circulation	Traffic and circulation	Require that HST system stations serve as multi-modal transportation hubs providing easy connection to local/regional bus, rail and transit services, as well as providing bicycle and pedestrian access.
		Require the HST system to be grade-separated from all roadways to allow vehicular traffic to flow without impediment from the HST system.
		Work with local and regional agencies to develop and implement transit-oriented development strategies, as described in Chapter 6B, around HST stations.
		Work with local and regional agencies to identify, plan, coordinate, and implement traffic flow improvements around HST station locations during project-level planning. Such improvements may include: a. a construction phasing and traffic management plan for construction periods b. improving capacity of local streets with upgrades in geometrics such as providing standards roadway lane widths, traffic controls, bicycle lanes, shoulders and sidewalks c. modifications at intersections, such as signalization and/or capacity improvements (widening for additional left-turn and/or through lanes), and turn prohibitions d. signal coordination and optimization (including retiming and rephasing) e. designation of one-way street patterns near some station locations f. truck route designations g. coordination with Caltrans regarding nearby highway facilities
		Work with public transportation providers to coordinate services and to increase service and/or add routes, as necessary, to serve the HST station areas.
		Avoid parking impacts by developing and coordinating implementation at the project-level of parking improvement strategies consistent with local policies, including shared parking, off-site parking with shuttles, parking and curbside use restrictions, parking permit plans for neighborhoods near HST stations, and other parking management strategies.
Air quality	Localized air quality impacts due to congestion/traffic near HST stations	Assure that HST stations are multi-modal hubs and include appropriate parking
		Coordinate with local and regional public transportation providers to increase opportunities for connection between the HST system and other public transportation services.
		Work with local and regional agencies to implement local street and roadway improvements, including various traffic flow improvements and congestion management techniques, and parking management strategies to reduce localized pollution from traffic related to the HST system
	Short-term air quality impacts due to construction	Water all active construction areas at least twice daily.
		Require that all trucks hauling soil, sand, and other loose materials be covered or maintain at least two feet of freeboard.
		Pave, apply water three times daily, or apply non-toxic soil stabilizers on all unpaved access roads, parking areas and staging areas at active construction sites.
		Sweep daily (with water sweepers) all paved access roads, parking areas and staging areas at active construction sites.
		Sweep nearby streets daily (with water sweepers) if visible soil materials from HST system construction are carried onto adjacent public streets.
		Hydroseed or apply non-toxic soil stabilizers to inactive construction areas (previously graded areas inactive for ten days or more).

Resource Area	Impact Area	Mitigation Measure
		Enclose, cover, water twice daily or apply non-toxic soil binders to exposed stockpiles of dirt, sand, etc.
		Limit traffic speeds on unpaved roads to 15 mph
		Install sand bags or other erosion control measures to prevent silt runoff to public roads.
		Replant vegetation in disturbed areas as quickly as possible.
		Use alternative fuels for construction equipment when feasible.
		Minimize equipment idling time.
		Maintain properly tuned equipment.
Noise	Increased noise from train operations and construction	Grade separations to eliminate grade crossing related noise.
		Noise barriers, such as sound walls, where there are severe noise impacts.
		Require noise reduction in HST equipment design and track structures design.
		Use of enclosures or walls to surround noisy equipment, and installation of mufflers on engines; substitution of quieter equipment or construction methods, minimizing time of operation and locate equipment farther from sensitive receptors.
		Where not already included, consider placing alignment sections in tunnel or trenches or behind berms where possible and where other measures are not available to reduce significant noise impacts.
		Suspend construction between 7:00 pm and 7:00 am and/or on weekends or holidays in residential areas where there are severe noise impacts.
		In managing construction noise take into account local sound control and noise level rules, regulations and ordinances.
		Ensure that each internal combustion engine would be equipped with a muffler of a type recommended by the manufacturer.
		Specify the use of the quietest available construction equipment where appropriate and feasible.
		Turn off construction equipment during prolonged periods of non-use.
		Require contractors to maintain all equipment and to train their equipment operators.
		Locate noisy stationary equipment away from noise sensitive receptors.
	Exposure to ground-borne vibration	Specify the use of train and track technologies that minimize ground vibration such as state of the art suspensions, resilient track pads, tie pads, ballast mats or floating slabs.
		Phase construction activity, use low impact construction techniques and avoid use of vibrating construction equipment where possible to avoid vibration construction impacts.
Energy	Increased energy use and electricity demand with the HST system	HST stations will be multi-modal hubs providing linkage for various transportation modes, which will contribute to increased efficiency of energy use for intercity trips and by commuters, and the stations will be required to be constructed to meet Title 24 California Code of Regulations energy efficiency standards.
		Design practices will require that the electrically powered HST technology be energy efficient, include regenerative braking to reduce energy consumption, and minimize grade changes in steep terrain to reduce energy consumption
		Design practices will require that localized impacts be avoided through planning and design of the power distribution system for the HST System.

Resource Area	Impact Area	Mitigation Measure
		Locate HST maintenance and storage facilities within proximity to major stations/termini.
	Energy use during construction of the HST system	Develop and implement a construction energy conservation plan.
		Use energy efficient construction equipment and vehicles.
		Locate construction material production facilities on-site or in proximity to project construction sites.
		Develop and implement a program encouraging construction workers to carpool or use public transportation for travel to and from construction sites.
Electromagnetic fields and electromagnetic interference	Exposure of electromagnetic fields to HST system workers, passengers, and nearby residents, schools and other facilities	Use standard design practices for overhead catenary power supply systems and vehicles, including appropriate materials, location and spacing of facilities and power supply systems to minimize exposure to receptors over distance, and shielding with vegetation and other screening materials.
		Design overhead catenary system, substations, and transmission lines to reduce the electromagnetic fields to a practical minimum.
	Electromagnetic interference with electronic and electrical devices	Design the overhead catenary system, substations, and transmission lines to reduce the electromagnetic fields to a practical minimum.
		Design the project component to minimize arcing and radiation of radiofrequency energy.
		Choose devices generating radiofrequency with a high degree of electromagnetic compatibility.
		Where appropriate, add electronic filters to attenuate radiofrequency interference.
		Relocate receiving antennas and use antenna models with greater directional gain where appropriate, particularly for sensitive receptors near the HST system.
		Comply with the FCC regulations for intentional radiators, such as the proposed HST wireless systems.
		Establish safety criteria and procedures and personnel practices to avoid exposing employees with implantable medical devices to EMF levels that may cause interference with such implanted biomedical devices.
Land use	Incompatibility with land uses and disruption to communities	Continue to apply design practices to minimize property needed for the HST system and to stay within or adjacent to existing transportation corridors to the extent feasible.
		Work with local governments to consider local plans and local access needs, and to apply design practices to limit disruption to communities.
		Work with local governments to establish requirements for station area plans and opportunities for transit oriented development.
		Work with local governments to enhance multi-modal connections for HST stations.
		Coordinate with cities and counties to ensure that HST facilities would be consistent with land use planning processes and zoning ordinances.
		Provide opportunities for community involvement early in project-level studies.
		Hold design workshops in affected neighborhoods to develop understanding of vehicle, bicycle, and pedestrian linkages in order to preserve those linkages through use of grade-separated crossings and other measures.
		Ensure that connectivity is maintained across the rail corridor (pedestrian/bicycle and vehicular crossings) where necessary to maintain neighborhood integrity.
		Develop facility, landscape and public art design standards for HST corridors that reflect the character of adjacent affected neighborhoods.

Resource Area	Impact Area	Mitigation Measure
		Maintain high level of visual quality of HST facilities in neighborhood areas by implementing such measures as visual buffers, trees and other landscaping, architectural design and public artwork.
	Impacts to neighborhoods during construction	Develop a traffic management plan to reduce barrier effects during construction.
		To the extent feasible maintain connectivity during construction.
Agricultural lands	Conversion of prime, statewide important, and unique farmlands, and farmlands of local importance, to project uses	Avoid farmland whenever feasible during the conceptual design stage of the project.
		Reduce the potential for impacts by sharing existing rail rights-of-way where feasible or by aligning HST features immediately adjacent to existing rail rights-of-way.
		Reduce the potential for impacts by reducing the HST right-of-way width to 50 feet in constrained areas.
		Increase protection of existing important farmlands by securing easements or participating in mitigation banks.
		Coordinate with and support the California Farmland Conservancy Program to secure conservation easements on farmland in geographic areas where the HST project creates impacts.
		Coordinate with private agricultural land trusts, local programs, mitigation banks, and Resource Conservation Districts to identify additional measures to limit important farmland conversion or provide further protection to existing important farmland.
	Severance of prime, statewide important, and unique farmlands, and farmlands of local importance, to project uses	Avoid farmland whenever feasible during the conceptual design stage of the project
		Minimize severance of agricultural land by constructing underpasses and overpasses at reasonable intervals to provide property access
		Work with landowners during final design of the system to enable adequate property access
		Provide appropriate severance payments to landowners.
Aesthetics and visual resources		At the project-level, design proposed facilities that are attractive in their own right and that would integrate well into landscape contexts, so as to reduce potential view blockage, contrast with existing landscape settings, light and shadow effects, and other potential visual impacts.
		Design bridges and elevated guideways with graceful lines and minimal apparent bulk and shading effects.
		Design elevated guideways, stations, and parking structures with sensitivity to the context, using exterior materials, colors, textures, and design details that are compatible with patterns in the surrounding natural and built environment, and that minimize the contrast of the structures with their surroundings.
		Use neutral colors and dulled finishes that minimize reflectivity for catenary support structures, and design them to fit the context of the specific locale.
		Use aesthetically appropriate fencing along rights-of-way, including decorative fencing, where appropriate, and use dark and non-reflective colors for fencing to reduce visual contrast.
		Where at-grade or depressed route segments pass through or along the edge of residential areas or heavily traveled roadways, install landscape treatments along the edge of the right-of-way to provide partial screening and to visually integrate the right-of-way into the residential context.
		Use the minimum amount of night lighting consistent with that necessary for operations and safety.

Resource Area	Impact Area	Mitigation Measure
		Use shielded and hooded outdoor lighting directed to the area where the lighting is required, and use sensors and timers for lights not required to be on all the time.
		Design stations to minimize potential shadow impacts on adjacent pedestrian areas, parks, and residential areas, and site all structures in a way that minimizes shadow effects on sensitive portions of the surrounding area.
		Seed and plant areas outside the operating rail trackbed that are disturbed by cut, fill or grading to blend with surrounding vegetated areas, where the land will support plants. Use native vegetation in appropriate locations and densities.
		Use strategic plantings of fast-growing trees to provide partial or full screening of elevated guideways where they are close to residential areas, parks, and public open spaces.
		Where elevated guideways are located down the median strips or along the edge of freeways or major roadways, use appropriate landscaping of the area under the guideway to provide a high level of visual interest. Landscaping in these area should use attractive shrubs and groundcovers, and emphasize the use of low-growing species to minimize any additional shadow effects or blockage of views.
		Plan hours of construction operations and locate staging sites to minimize impacts to adjacent residents and businesses.
Public utilities		Make adjustments to the HST system alignments and vertical profiles to avoid crossing or using major utility right-of-way or fixed facilities during engineering design.
		If avoidance is not feasible, in consultation and coordination with the utility owner, relocate or protect in place transmission lines, substations, and any other affected facilities.
		For acquisition projects which result in utility relocation, follow the uniformity and equitable treatment policies, and comply with the requirements, of the Uniform Relocation Assistance and Real Property Acquisition Policies Act of 1970 for all property necessary for the proposed HST system.
Hazardous materials and wastes		Investigate soils and groundwater for contamination and prepare environmental site assessments when necessary.
		Design realignment of the HST corridors to avoid identified sites.
		Relocate HST associated facilities such as stations to avoid identified sites.
		Remediate identified hazardous materials and hazardous waste contamination.
		Prior to demolition of buildings for project construction, survey for lead-based paint and asbestos-containing materials.
		Follow BMP's for testing, treating, and disposing of water, and acquire necessary permits from the regional water quality control board, if ground dewatering is required.
		When indicated by project level environmental site assessments, perform Phase II environmental site assessments in conformance with the ASTM Standards related to the Phase II Environmental Site Assessment Process to identify specific mitigation measures.
		Prepare a Site Management Program/Contingency Plan prior to construction to address known and potential hazardous material issues, including a. Measures to address management of contaminated soil and groundwater; b. Site-specific Health and Safety Plan (HASP), including measures to protect construction workers and general public; and c. Procedures to protect workers and the general public in the event that unknown contamination or buried hazards are encountered.

Resource Area	Impact Area	Mitigation Measure
		As part of the second-tier environmental review, consider impacts to the environment on sites identified on the Cortese list (Government Code section 65962.4) at that time.
Cultural and paleon-tological resources	Impacts to archaeological resources and traditional cultural properties	Avoid the impact, or when avoidance cannot be accommodated, minimize the scale of the impact.
		Incorporate the site into parks or open space.
		Provide data recovery for the archaeological resources, which may include excavation of an adequate sample of the site contents so that research questions applicable to the site can be addressed.
		Develop procedures for fieldwork, identification, evaluation, and determination of potential effects to archaeological resources in consultation with SHPO and Native American tribes. Procedures may include on-site monitoring when sites are known or suspected of containing Native American human remains and be reflected in Memoranda of Agreement with appropriate bodies.
		Coordinate and consult with tribal representatives.
	Impacts to historic properties/ resources	Avoid the impact through project design. Prepare and utilize a treatment plan for protection of historic properties/resources that would describe methods to preserve, stabilize, shore/underpin, and monitor buildings, structures, and objects.
		Avoid high vibration construction techniques in sensitive areas.
		Record and document cultural resources that would be adversely affected by the project to the standards of the Historic American Building Survey or Historic American Engineering Record.
		Develop design guidelines to ensure sympathetic, compatible, and appropriate designs for new construction.
		Consult with architectural historians or historical architects to advise on appropriate architectural treatment of the structural design of proposed new structures. Prepare interpretive and/or educational materials and programs regarding the affected historic properties/resources. Materials may include: a popular report, documentary videos, booklets, and interpretive signage.
		Make interpretive information available to state and local agencies, such as salvage items, historic drawings, interpretive drawings, current and historic photographs, models, and oral histories. Also assist with archiving and digitizing the documentation of the cultural resources affected, and disseminating material to the appropriate repositories.
		Relocate and rehabilitate historic properties/resources that would otherwise be demolished because of the project.
		Monitor project construction to ensure it conforms to design guidelines and any other treatment procedures agreed to by the parties consulting pursuant to Section 106 of the National Historic Preservation Act. Repair inadvertent damage to historic properties/resources in accordance with the Secretary of the Interior's Standards for Treatment of Historic Properties.
		Salvage selected decorative or architectural elements of the adversely affected historic properties/resources, and retain and incorporate salvaged items into new construction where possible. If reuse is not possible, make salvaged items available for use in interpretive displays near the affected resources or in an appropriate museum.
		Implement an agreement with appropriate bodies specifying procedures for addressing historic resources which may be affected by the HST system.

Resource Area	Impact Area	Mitigation Measure
	Impacts to paleontological resources	Educate workers.
		Recover fossils identified during the field reconnaissance.
		Monitor construction.
		Develop protocols for handling fossils discovered during construction, such as temporary diversion of construction equipment so that the fossils could be recovered, identified, and prepared for dating, interpreting, and preserving at an established, permanent, accredited research facility.
Geology and soils	Seismic hazards	Design structures to withstand anticipated ground motion, using design options such as redundancy and ductility.
		Prevent liquefaction and resulting structural damage and traffic hazards using: (1) ground modification techniques such as soil densification; and (2) structural design, such as deep foundations.
		Utilize motion sensing instruments to provide ground motion data and a control system to temporarily shut down HST operations during or after an earthquake to reduce risks.
		Design and engineer all structures for earthquake activity using CalTrans Seismic design Criteria.
		Design and install foundations resistant to soil liquefaction and settlement.
		Identify potential serpentinite bedrock disturbance areas and implement a safety plan.
		Apply Section 19 requirements from the most current CalTrans Standard Specifications to ensure geotechnically stable slopes are planned and created.
		Install passive or active gas venting systems and gas collection systems in areas where subsurface gases are identified.
		Remove corrosive soil and use corrosion protected materials in infrastructure.
		Address erosive soils through soil removal and replacement, geosynthetics, vegetation, and or rip/rap, where warranted.
		Remove or moisture condition shrink/swell soils.
		Utilize stone columns, grouting, and deep dynamic compaction in areas of potential liquefaction.
		Utilize buttress berms, flattened slopes, drains, and/or tie-backs in areas of slope instability.
		Avoid settlement through preloading, use of stone columns, deep dynamic compaction, grouting, and/or special foundation designs.
	Surface rupture hazards	Install early warning systems triggered by strong ground motion associated with ground rupture, such as linear monitoring systems (i.e., time domain reflectometers) along major highways and rail lines within the zone of potential rupture to provide early warnings and allow for temporary control of rail and automobile traffic to avoid and reduce risks.
		Continue to modify alignments to avoid crossing known or mapped active faults within tunnels.
		Avoid active faults to the extent possible. Where avoidance is not possible, cross active faults at grade and perpendicular to the fault line.
	Slope instability	Install temporary and permanent slope reinforcement and protection, based on geotechnical investigations, and review of proposed earthwork and foundation excavation plans.
		Conduct geotechnical inspections during construction to verify that no new, unanticipated conditions are encountered.

Resource Area	Impact Area	Mitigation Measure
		Incorporate slope monitoring in final design.
	Difficulty in excavation	Identify areas of potentially difficult excavation to ensure safe practices.
		Focus future geotechnical engineering and geologic investigations in areas of potentially difficult excavation.
		Monitor conditions during and after construction.
		Employ tunnel excavation and lining techniques to ensure safety.
	Hazards related to oil and gas fields	Follow federal and state Occupational Safety and Health Administration regulatory requirements for excavations.
		Consult with other agencies such as the Department of Conservation's Division of Oil and Gas, or the Department of Toxic Substances Control regarding known areas of concern.
		Use safe and explosion-proof equipment during construction.
		Test for gases regularly.
		Install monitoring systems and alarms in underground construction areas and facilities where subsurface gases are present.
		Install gas barrier systems.
Hydrology and water resources	Impacts on floodplains	Avoid or minimize construction of facilities within floodplains where feasible.
		Minimize the footprint of facilities within the floodplain, through design changes or the use of aerial structures and tunnels.
		Restore the floodplain to its prior operation in instances where the floodplain is impacted by construction.
	Impacts on surface waters	Use construction methods and facility designs to minimize the potential encroachments onto surface water resources.
		Minimize sediment transport caused by construction by following best management practices (BMPs) as part of National Pollutant Discharge Elimination System (NPDES) and Storm Water Pollution Prevention Plan requirements that will be included in construction permits. BMPs may include measures such as: a. providing permeable surfaces where feasible; b. retaining and treating stormwater onsite using catch basins and filtering wet basins; c. minimizing the contact of construction materials, equipment, and maintenance supplies with stormwater; d. reducing erosion through soil stabilization, watering for dust control, installing perimeter silt fences, placing rice straw bales, and installing sediment basins; e. maintaining water quality by using infiltration systems, detention systems, retention systems, constructed wetland systems, filtration systems, biofiltration/bioretention systems, grass buffer strips, ponding areas, organic mulch layers, planting soil beds, sand beds, and vegetated systems such as swales and grass filter strips that are designed to convey and treat either fallow flow (swales) or sheetflow (filter strips) runoff.
		Use methods such as habitat restoration, reconstruction of [habitat] onsite, and habitat replacement offsite to minimize surface water quality impacts.
		Comply with mitigation measures included in permits issued under sections 404 and 401 of the federal Clean Water Act.
		Comply with requirements in the Storm Water Pollution Prevention Plan to reduce pollutants in storm water discharges and the potential for erosion and sedimentation.

Resource Area	Impact Area	Mitigation Measure
		Comply with requirements of section 10 of the federal Rivers and Harbors Act for work required around a water body designated as navigable and applicable permit requirements.
		Comply with the requirements of a state Streambed Alteration Agreement for work along the banks of various surface water bodies.
		Implement a spill prevention and emergency response plan to handle potential fuel or other spills.
		Where feasible, avoid significant development of facilities in areas that may have substantial erosion risk, including areas with erosive soils or steep slopes.
	Impacts on groundwater	Minimize development of facilities in areas that may have substantial groundwater discharge or affect recharge.
		Apply for, obtain, and comply with conditions of applicable waste discharge requirements as part of project-level review.
		Develop facility designs that are elevated, or at a minimum are permeable, and would not affect recharge potential where construction is required in areas of potentially substantial groundwater discharge or recharge.
		Apply for and obtain a Storm Water Pollution Prevention Plan for grading, with Best Management Practices that would control release of contaminants nears areas of surface water or groundwater recharge. Best Management Practices may include constraining fueling and other sensitive activities to alternative locations, providing drip plans under some equipment, and providing daily checks of vehicle condition.
		Use and retain native materials with high infiltration potential at the ground surface in areas that are critical to infiltration for groundwater recharge.
Biological resources and wetlands	Impacts to sensitive vegetation communities	Utilize existing transportation corridors and rail lines to minimize potential impacts.
		Use large diameter tunnels as part of the design to limit surface access needs in tunnels for ventilation or evacuation, as a method to avoid or limit impacts to vegetation and habitat above tunnels.
		Use in-line construction (i.e., use new rail infrastructure as it is built) to transport equipment to/from the construction site and to transport excavated material away from the construction to appropriate re-use or disposal sites to minimize impacts from construction access roads on vegetation/habitat.
		Accomplish necessary geologic exploration in sensitive areas by using helicopters to transport drilling equipment and for site restoration to minimize surface disruption.
		Use and reuse excavated materials within the confines of the project.
		Participate in or contribute to existing or proposed conservation banks or natural management areas, including possible acquisition, preservation, or restoration of habitats.
		Revegetate/restore impacted areas, with a preference for on-site mitigation over off-site, and with a preference for off-site mitigation within the same watershed or in close proximity to the impact where feasible.
		Comply with the Biological Resources Management Plan(s) developed or identified during project-level studies, as reviewed by the USFWS, CDFG, and USACE.
		Conduct pre-construction focused biological surveys.
		Conduct biological construction monitoring.
		Undertake plant relocation, seed collection, plant propagation, and outplanting at suitable mitigation sites.

Resource Area	Impact Area	Mitigation Measure
		Prevent the spread of weeds during construction and operation by identifying areas with existing weed problems and measures to control traffic moving out of those areas such as cleaning construction vehicles or limiting the movement of fill.
	Impacts to wildlife movement corridors	Construct wildlife underpasses, bridges, and/or large culverts, to facilitate known wildlife movement corridors.
		Ensure that wildlife crossings are of a design, shape, and size to be sufficiently attractive to encourage wildlife use.
		Provide appropriate vegetation to wildlife overcrossings and undercrossings to afford cover and other species requirements.
		Establish functional corridors to provide connectivity to protected land zoned for uses that provide wildlife permeability.
		Design protective measures for wildlife movement corridors using the following process in consultation with resource agencies: a. Identify the habitat areas the corridor is designed to connect b. Select several species of interest from the species present in the area c. Evaluate the relevant needs of each selected species d. For each potential corridor, evaluate how the area will accommodate movement by each species of interest e. Draw the corridors on a map f. Design a monitoring program
		Utilize existing transportation corridors and rail lines to minimize potential impacts.
		Use aerial structures or tunnels to allow for unhindered crossing by wildlife.
	Impacts to non-wetland jurisdictional waters	Utilize existing transportation corridors and rail lines to minimize potential impacts.
		Return degraded habitat to pre-existing conditions.
		Create new habitat by converting non-wetland habitats into wetland or other aquatic habitat.
		Enhance existing habitats by increasing one or more functions through activities such as plantings or non-native vegetation eradication.
		Provide for passive revegation by allowing a disturbed area to revegetate naturally.
		Purchase credits in an existing wetlands or aquatic habitat mitigation bank.
		Provide in-lieu fee payments to an agency or other entity who will provide aquatic habitat conservation or restoration.
		Prefer on-site mitigation over off-site mitigation, and for off-site mitigation prefer that located within the same watershed or as close in proximity to the area of impact as possible.
	Impacts to wetlands	Utilize existing transportation corridors and rail lines to minimize potential impacts.
		Return degraded habitat to pre-existing conditions.
		Create new habitat by converting non-wetland habitats into wetland or other aquatic habitat.
		Enhance existing habitats by increasing one or more functions through activities such as plantings or non-native vegetation eradication.
		Provide for passive revegation by allowing a disturbed area to revegetate naturally.
		Purchase credits in an existing wetlands or aquatic habitat mitigation bank.
		Provide in-lieu fee payments to an agency or other entity who will provide aquatic habitat conservation or restoration.

Resource Area	Impact Area	Mitigation Measure
		Develop and implement measures to address the “no net loss” policy for wetlands.
		Prefer on-site mitigation over off-site mitigation, and for off-site mitigation prefer that located within the same watershed or as close in proximity to the area of impact as possible.
	Impacts to marine and anadromous fishery resources	Utilize existing transportation corridors and rail lines to minimize potential impacts.
		Comply with the terms of a Streambed Alteration Agreement for work along banks of surface water bodies.
		Implement a spill prevention and emergency response plan to handle potential fuel or other spills.
		Incorporate bio-filtration swales to intercept runoff.
		Where feasible, avoid significant development of facilities in areas that may have substantial erosion risk, including areas with erosive soils and steep slopes.
	Impacts to special status species	Utilize existing transportation corridors and rail lines to minimize potential impacts.
		Relocate sensitive species.
		Conduct pre-construction focused surveys.
		Conduct biological construction monitoring.
		Restore suitable breeding and foraging habitat.
		Purchase credits from an existing mitigation bank.
		Participate in an existing Habitat Conservation Plan.
		Phase construction around the breeding season.
Public parks and recreation resources	Impacts to parks and recreational resources	Continue to apply design practices to avoid impacts to park resources, and when avoidance cannot be accommodated, minimize the scale of the impact
		Apply measures at the project level to reduce and minimize indirect/proximity impacts as appropriate for the particular sites affected, while avoiding other adverse impacts (e.g., visual), such as noise barriers, visual buffers and landscaping.
		Apply measures to modify access to/egress from the recreational resource to reduce impacts to these resources.
		Design and construct cuts, fill, and aerial structures to avoid and minimize visual impacts to units of the state park system.
		Incorporate wildlife under or over crossings at appropriate intervals as necessary.
		Where public parklands acquired with public funds would be acquired for non-park use as part of the HST system, commit as required by law to providing funds for the acquisition of substantially equivalent substitute parkland or to acquiring/providing substitute parkland of comparable characteristics for construction impacts.
		Restore affected park lands to natural state and replace or restore affected park facilities.
		If park facilities must be relocated, provide planning studies as well as appropriate design and replacement with minimal impact on park use.
		Use local native plants for revegetation.
		Develop and implement construction practices, including scheduling, to limit impacts to wildlife, wildlife corridors and visitor use areas within public parks.
		For temporary unavoidable loss of park and recreation facility uses consider providing compensation.

Resource Area	Impact Area	Mitigation Measure
Cumulative	Impacts on traffic and circulation and travel conditions	The following program level mitigation strategies can be developed, in consultation with state, federal, regional, and local governments and affected transit agencies, to improve the flow of intercity travel on the primary routes and access to the proposed stations or airports and will reduce this impact: 1. Regional strategies would include coordination with Regional Transportation planning and Intelligent Transportation System Strategies. 2. Local improvements could employ TSM/Signal Optimization; local spot widening of curves; and major intersection improvements.
		The following program level mitigation strategies can be developed, in consultation with state, federal, regional, and local governments and affected transit agencies, to improve the flow of intercity travel on the primary routes and access to the proposed stations or airports and will reduce this impact: 1. Regional strategies would include coordination with Regional Transportation planning and Intelligent Transportation System Strategies. 2. Local improvements could employ TSM/Signal Optimization; local spot widening of curves; and major intersection improvements.
	Impacts on air quality	The project level mitigation strategies to address localized impacts can consider the following and will reduce this impact: 1. Increase emission controls from power plants supplying power for the HST Alternative. 2. Design the system to utilize energy efficient, state-of-the-art equipment. 3. Promote increased use of public transit, alternative fueled vehicles, and parking for carpools, bicycles, and other alternative transportation methods. 4. Alleviate traffic congestion around passenger station areas. 5. Minimize construction air emissions.
	Impacts on noise and vibration	The program level mitigation strategies relate to the following and will reduce this impact: 1. design practices emphasizing the use of tunnels or trenches 2. use of electric powered trains, higher quality track interface, and smaller lighter and more aerodynamic trainsets; and 3. full grade separations from all roadways.
		The project level mitigation strategies include the following and will reduce this impact: 1. treatments for insulation of buildings affected by noise and vibration; 2. sound barrier walls within the right-of-way; 3. track treatments to minimize train vibrations; and 4. construction mitigation.
	Impacts on land use and planning, communities and neighborhoods, property, and environmental justice	The program level mitigation strategies for HST Alternative contributions to the land use impacts, include the following and will reduce this impact: 1. Design practices to maximize use of existing rights-of-way and incorporating strategies for stations to incorporate transit oriented design. 2. Coordination with cities and counties in each region to ensure that project facilities would be consistent with land use planning processes and zoning ordinances.

Resource Area	Impact Area	Mitigation Measure
	Impacts on agricultural lands	The program level mitigation strategies include the following and will reduce this impact: 1. design practices to avoid agricultural land conversion through maximizing use of existing rights-of-way to minimize encroachment on additional agricultural lands 2. utilizing aerial structure or tunnel alignments to allow for vehicular and pedestrian traffic access across the alignment; and 3. reducing the new right-of-way to 50 feet in constrained areas.
		The project level mitigation strategies include the following and will reduce this impact: 1. securing easements, 2. participating in mitigation banks, 3. increasing permanent protection of farmlands at the local planning level, and 4. coordinating with various local, regional, and state agencies support farmland conservation programs.
	Impacts on aesthetics and visual resources	The program level mitigation strategies include the following and will reduce this impact: 1. design practices that will incorporate local agency and community input during subsequent project level environmental review in order to develop context sensitive aesthetic designs and treatments for infrastructure.
		The project level mitigation strategies include the following and will reduce this impact: 1. design of facilities that integrate into landscape contexts, reducing potential view blockage, contrast with existing landscape settings, and light and shadow effects.
	Impacts on public utilities	The program level mitigation strategies include the following and will reduce this impact: 1. design practices that will avoid potential conflicts, at the project level analysis, to the extent feasible and practical. These practices include: design methods to avoid crossing or using utility rights-of-way include modifying both the horizontal and vertical profiles of proposed transportation improvements. Emphasis would be placed on detailed alignment design to avoid potential contribution to cumulative impacts from linear facilities on land use opportunities and to minimize conflicts with existing major fixed public utilities and supporting infrastructure facilities.
		The project level mitigation strategies include the following and will reduce this impact: 1. coordination with utility representatives during construction in the vicinity of critical infrastructure will occur.
	Impacts on cultural and paleontological resources	The program level mitigation strategies include the following and will reduce this impact: 1. Continued consultation with SHPO would occur to define and describe general procedures to be applied in the future for fieldwork, method of analysis, and the development of specific mitigation measures to address effects and impacts to cultural resources, resulting in a programmatic agreement between the Authority, FRA and SHPO. 2. Consultation with Native American tribes would occur.

Resource Area	Impact Area	Mitigation Measure
		The project level mitigation strategies include the following and will reduce this impact: 1. avoidance measures through identification of sensitive resources within the project level analysis and project design refinement and careful selection of alignments. 2. subsequent project level field studies to verify the location of cultural resources would offer opportunities to avoid or minimize direct impacts on resources, based on the type of project, type of property, and impacts to the resource.
	Impacts on geology and soils	The program level mitigation strategies include the following and will reduce this impact: 1. Design practices will be used while preparing extensive alignment studies to ensure that potential effects related to major geologic hazards such as major fault crossings, oil fields, and landslide areas, will be avoided. 2. Mitigation for potential impacts will be developed on a site-specific basis, based on detailed geotechnical studies to address ground shaking, fault crossings, slope stability/landslides, areas of difficult excavation, hazards related to oil and gas fields, and mineral resources.
	Impacts on hydrology and water resources	The program level mitigation strategies include the following and will reduce this impact: 1. design practices to maximize use of existing rights-of-way to minimize potential impacts on water resources.
		The project level mitigation strategies include the following and will reduce this impact: 1. Avoidance and minimization measures would be incorporated into the development, design, and implementation phases. 2. Close coordination will occur with the regulatory agencies to develop specific design and construction standards for stream crossings, infrastructure setbacks, erosion control measures, sediment controlling excavation/fill practices, and other best management practices. 3. Mitigation strategies specific to reconstruction, restoration, or replacement of the resource will occur, in close coordination with state and federal resource agencies, related to flood plains; surface waters, runoff, and erosion; and groundwater.
	Impacts on biological resources and wetlands	The program level mitigation strategies include the following and will reduce this impact: 1. design practices to maximize use of existing rights-of-way to minimize potential impacts on biological resources and wetlands.

Resource Area	Impact Area	Mitigation Measure
		The project level mitigation strategies include the following and will reduce this impact: 1. Avoidance and minimization measures would be incorporated into the development, design, and implementation phases. 2. Close coordination will occur with the regulatory agencies to develop specific design and construction standards for stream crossings, infrastructure setbacks, monitoring during construction, and other best management practices. 3. Mitigation strategies specific to reconstruction, restoration, or replacement of the resource will occur, in close coordination with state and federal resource agencies, related to wetlands. 4. Field studies would be conducted to verify the location, in relation to the HST alignments, of sensitive habitat, wildlife movement corridors, and wetlands. These studies would provide further opportunities to minimize and avoid potential impacts on biological resources through changes to the alignment plan and profile in sensitive areas. For example, the inclusion of design features such as elevated track structures over drainages and wetland areas and wildlife movement corridors would minimize potential impacts to wildlife and sensitive species.
	Impacts on Section 4(f) and 6(f) resources (public parks and recreational resources)	The program level mitigation strategies include the following and will reduce this impact: 1. Incorporation of sound barriers (e.g., walls, berms or trenches), visual buffers/landscaping, and modification of transportation access to/egress from the public lands and recreational resource. 2. Incorporation of design modifications or controls on construction schedules, phasing, and activities.
		The project level mitigation strategies include the following and will reduce this impact: 1. Beautification measures. 2. Replacement of land or structures or their equivalents on or near their existing site(s). 3. Tunneling, cut and cover, cut and fill of right-of-ways. 4. Treatment of embankments. 5. Planting, screening, creating wildlife corridors, acquisition of land for preservation, installation of noise barriers. 6. Establishment of pedestrian or bicycle paths. 7. Other potential mitigation strategies could be identified during the public input process.

Resource Area	Impact Area	Mitigation Measure
		In the event that HST alignments or facilities are located within or in close proximity to public parks, the following mitigations for natural, cultural, aesthetic and recreational impacts may be considered to offset the contribution to the cumulative impact, including but not limited to: 1. Compensation for temporary and loss of park and recreation use. 2. Recordation of any historic features removed. 3. If necessary, provide alternative shuttle access service to park visitors. 4. Restore directly impacted park lands to a natural state. 5. If any facilities must be relocated, provide planning studies as well as design and appropriate replacement with minimal impact on park use. 6. Inventory and record affected historic structures. Provide appropriate mitigation for adverse effects to historic structures. 7. Require appropriate vehicle cleaning for all construction equipment used near units of the California State Park System to protect against spreading exotic plants or disease. 8. Use local native plants for revegetation. 9. Design and construct cuts, fills, and aerial structures to avoid and minimize visual impact to units of the State Park System. 10. In addressing impacts to wildlife movement corridors and habitat directly related to California State Park System units, consult with the California Department of Parks and Recreation. 11. Incorporate wildlife under- or over-crossings as necessary. 12. Adopt construction practices to protect critical wildlife corridors and visitor use areas within public parks.

APPENDIX **D**

2005 FEDERAL RAILROAD ADMINISTRATION RECORD OF DECISION

AVAILABLE ON THE CALIFORNIA HIGH-SPEED RAIL AUTHORITY WEBSITE:
http://www.cahighspeedrail.ca.gov/library.aspx

U.S. Department of Transportation
Federal Railroad Administration

Record of Decision
California High-Speed Train System

This Record of Decision (ROD) records the decision of the Federal Railroad Administration (FRA), an operating administration of the U.S. Department of Transportation, with regard to the California High-Speed Train (HST) System proposed by the California High-Speed Rail Authority (Authority), at the initial programmatic phase of environmental review. In making this decision, FRA considered the information, and analysis, contained in the Draft and Final Program Environmental Impact Report/Environmental Impact Statements (EIR/EIS) for the Proposed California High-Speed Train System and public and agency comments.

This ROD has been drafted in accordance with the Council on Environmental Quality's (CEQ) regulations implementing the National Environmental Policy Act (NEPA), (40 CFR § 1505.2) and FRA Environmental Procedures (64 Fed. Reg. 28545, May 26, 1999). Specifically, this ROD:

- States FRA's decision on the proposed California HST system.
- Provides background on the proposed HST system and the NEPA tiering process.
- Describes FRA's role in the HST program.
- Describes the factors considered by the FRA in making this decision.
- Identifies the alternatives considered by the FRA.
- Summarizes environmental benefits and adverse impacts.
- Summarizes the comments received on the Final Program EIR/EIS.
- Discusses measures to minimize environmental harm.
- Describes compliance with other federal regulations.
- Describes some initial next steps in the tiered environmental review process.

1. Decision

The California High Speed Train Program EIR/EIS is the first programmatic phase of a tiered environmental review process and the FRA, in cooperation with the Authority, is making initial and basic decisions on the proposed HST system. The Authority is the agency of California state government charged under California law (California Public Utilities Code § 185000 et seq.) with the exclusive responsibility for planning, construction, and operation of high-speed passenger train service at speeds exceeding 125 miles per hour. As Federal co-lead agency for the Program EIR/EIS, FRA has

worked jointly with the Authority to carry out the analyses and evaluations included in the Draft and Final Program EIR/EIS's. The FRA makes the following decisions:

1. To select the HST Alternative and to reject the No Action Alternative as well as the Modal Alternative (highway/aviation improvements); and

2. To eliminate certain conceptual HST corridors, alignments, and station options evaluated in the Program EIR/EIS from further consideration; and

3. To select for further consideration in the tiered environmental reviews to be prepared subsequent to the Program EIR/EIS, the preferred conceptual corridor, alignment, and station options for the HST as described in the Final Program EIR/EIS.

The Program EIR/EIS considers the comprehensive nature and scope of the proposed HST system, at the conceptual stage of planning and decision-making, including potential route and station locations. FRA's decisions select conceptual corridors and station locations for further analysis.

The Authority considered and made similar decisions when certifying the Final Program EIR/EIS under CEQA on November 2, 2005. The Authority may also pursue preservation of right-of-way in selected corridors and at station locations through protective advance acquisition consistent with the Federal Uniform Relocations Assistance and Real Property Acquisitions Policies Act and Federal and State law.

Subsequent future tiers of project-level environmental review will examine a range of HST project alternatives as portions of the proposed HST system are advanced within corridors and at station locations selected in the Program EIR/EIS, as well as a no action alternative. Project-level reviews will fully describe site-specific environmental impacts and will identify specific mitigation measures to address those impacts. The FRA and the Authority will assess the site characteristics, size, nature, and timing of proposed specific projects to determine whether the impacts are potentially significant and whether impacts can be avoided or mitigated.

Because the Program EIR/EIS does not assess future actions to implement an HST system at specific locations, the FRA cannot predict site-specific impacts with certainty and cannot determine more specific mitigation measures appropriate for mitigating those impacts. Consequently, the Program EIR/EIS identifies design practices and mitigation strategies, which are an array of actions that can be applied at the project-level to avoid, minimize, or mitigate the types of environmental impacts anticipated as a result of implementation of the HST system. To minimize potential future environmental harm from implementation of the proposed HST system, the FRA adopts the design practices and mitigation strategies in the Mitigation Monitoring and Reporting Plan (MMRP) included as Appendix A.

2. Introduction

The Authority was created pursuant to state legislation in 1996 to develop a plan for the construction, operation, and financing of a statewide, intercity high-speed passenger train system offering intercity service (California Public Utilities Code § 185000 et seq.). The Authority's enabling legislation, Senate Bill (SB) 1420 (chaptered 9/24/96, Chapter 796, Statute of 1996), defines high-speed rail as "intercity passenger rail service that utilizes an alignment and technology that makes it capable of sustained speeds of 200 miles per hour (mph) (320 kilometers per hour [kph]) or greater." Based on the results of initial feasibility studies, the Authority advanced the evaluation of a proposed HST system as the logical next step in the development of California's transportation infrastructure.

In June 2000, the Authority adopted the final business plan (Business Plan) (California High Speed Authority 2000) describing an economically viable HST system over 700 miles long (1,127-kilometers). This system would be capable of speeds in excess of 200 miles per hour (mph) (322 kilometers per hour [kph]) and would travel on a mostly dedicated system with fully grade-separated tracks with state-of-the-art safety, signaling, and automated train control systems. It would connect and serve the major metropolitan areas of California, extending from Sacramento and the San Francisco Bay Area through the Central Valley to Los Angeles and San Diego. Such a system would be expected to carry a minimum of 42 million passengers annually, representing 32 million intercity trips and 10 million commuter trips, by the year 2020 and would have revenues in excess of operations and maintenance costs.

At the beginning of the EIR/EIS process, in order to describe a proposed HST system and alternatives for analysis in the EIR/EIS, the Authority and FRA reviewed previous studies and considered the purpose and need of the HST system. The Authority and the FRA determined that the appropriate initial California Environmental Quality Act (CEQA) and NEPA document for the proposed HST system would be a programmatic EIR/EIS, considering the comprehensive nature and scope of the HST system, to support conceptual decision-making. The programmatic level of environmental review allows for the broadest disclosure of impacts, and has provided the opportunity for the Authority, the FRA, and the public to consider alternatives to an HST system, and different conceptually defined HST corridor alignment and station options. Analyzing a proposed large-scale transportation system at the conceptual planning stage also provides the Authority and FRA with the best opportunity to develop design practices and mitigation strategies to avoid and minimize identified impacts.

The California High Speed Train Program EIR/EIS is the first phase of a tiered environmental review process, and was prepared for the first and programmatic-level of review and consideration of early policy decisions on the HST system. The program-level Program EIR/EIS was developed to make two levels of decision.

1. To decide whether to pursue a high speed train system, involving steel-wheel-on-steel-rail technology along certain conceptual corridors shown in Figures 1 and 2 and designed to help meet California's increasing demand

for transportation, versus doing nothing, or recommending a modal alternative (highway/aviation improvements); and

2. To determine which of the conceptual corridors, alignments, and station options evaluated in the Program EIR/EIS can be eliminated from consideration and which to select for further consideration in the tiered environmental reviews to be prepared subsequent to the Program EIR/EIS, if the high-speed train system is pursued.

NEPA requires that an agency consider the environmental effects of its actions at the earliest point in time when the analysis is meaningful, and it is within the agencies' discretion to fashion an environmental process appropriate to the type of decisions they are considering. The Program EIR/EIS shapes the parameters for the site-specific environmental documents to support second-tier project decisions. The tiered project-level environmental reviews will fully describe site-specific environmental impacts of a range of project alternatives within selected corridors and at station locations and will define specific mitigation measures to address those impacts.

Pursuant to the requirements of NEPA and CEQA, a comprehensive public and agency involvement effort was conducted as part of the program environmental process. Public and agency involvement was accomplished through a variety of means, including the following: scoping process that included a series of public and agency scoping meetings; consultation meetings with federal and state resource agency staff representatives throughout the environmental process; informational meetings with interest groups and agencies; presentations and briefings to a broad spectrum of interest groups; information materials, including a series of region-specific fact sheets; the Authority's Web site (www.cahighspeedrail.ca.gov) presenting information about the proposed project and study evaluations; noticed public meetings of the Authority's governing board at which key policy issues and decisions were raised and discussed and opportunities for public comment were provided; public circulation of the Draft Program EIR/EIS; and posting on the Authority's website, including technical studies, public information sessions and seven public hearings on the Draft Program EIR/EIS, as well as written comments received during the public comment period from January 27, 2004 to August 31, 2004; and public circulation of the Final Program EIR/EIS. The FRA's website was linked to the Authority's website throughout the program environmental process.

As part of the agency involvement in the environmental process, the Federal Highway Administration, U.S. Environmental Protection Agency (USEPA), U.S. Army Corps of Engineers (USACE), Federal Transit Administration, Federal Aviation Administration, and U.S. Fish and Wildlife Service served as cooperating agencies under NEPA for the preparation of the Program EIR/EIS.

The announcement of the availability of the Draft and Final Program EIR/EIS and the Authority's website listed the 32 libraries across the state having a hard copy of the documents available for review. Participating libraries were located in the following cities: Anaheim, Bakersfield, Burbank, Escondido, Fremont, Fresno, Gilroy, Irvine, Los Angeles, Merced, Modesto, Mountain View, Norwalk, Oakland, Oceanside, Ontario, Palmdale, Palo Alto, Riverside, Sacramento, San Clemente, San Diego, San Francisco, San Gabriel, San Jose, Santa Clarita, Stockton, Sylmar, Temecula, and Tulare.

The release of the Draft Program EIR/EIS and the release of the Final Program EIR/EIS were also announced through a display ad distributed in 16 statewide newspapers. The display ads were published in the following newspapers: *Sacramento Bee, Daily Republic*, *Oakland Tribune*, *San Francisco Chronicle*, *San Jose Mercury*, *Modesto Bee*, *Merced Sun Star*, *Fresno Bee*, *Bakersfield Californian*, *Los Angeles Times*, *Orange County Register*, *Antelope Valley Press*, *The Press-Enterprise*, *North County Times*, *San Diego Tribune*, and *Stockton Record*.

A notice of availability of the Final Program EIR/EIS was published in the Federal Register by the Environmental Protection Agency on September 23, 2005.

3. FRA's Role in the HST Program

The FRA is serving as the lead Federal agency for the preparation of this joint State/Federal environmental review of the HST program. The Authority envisions seeking possible future federal financial support for the system that might be provided through the FRA. The FRA and the U.S. Department of Transportation have several loan and loan guarantee programs that might be potential sources of future financial assistance. Although no existing grant or federal bond financing programs provide the type of support envisioned, several proposals to create such programs, are pending before Congress. In addition to possible funding, a Rule of Particular Applicability may be required from the FRA to establish safety standards for the proposed HST system for operating speeds over 200 mph (322 kph) and for operations in shared-use rail corridors.

4. Purpose and Need for the Proposed Action

The purpose of the proposed HST system is to provide a reliable mode of travel that links the major metropolitan areas of the state and delivers predictable and consistent travel times. A further purpose is to provide an interface with commercial airports, mass transit, and the highway network and relieve capacity constraints of the existing transportation system as increases in intercity travel demand in California occur, in a manner sensitive to and protective of California's unique natural resources.

The Authority's statutory mandate is to plan, build, and operate an HST system that is coordinated with the state's existing transportation network, particularly intercity rail and bus lines, commuter rail lines, urban rail transit lines, highways, and airports. The Authority has responded to this mandate by adopting the following objectives and policies for the proposed HST system.

- Provide intercity travel capacity to supplement critically over-utilized interstate highways and commercial airports.
- Meet future intercity travel demand that will be unmet by present transportation systems and increase capacity for intercity mobility.

- Maximize intermodal transportation opportunities by locating stations to connect with local transit, airports, and highways.
- Improve the intercity travel experience for Californians by providing comfortable, safe, frequent, and reliable high-speed travel.
- Provide a sustainable reduction in travel time between major urban centers.
- Increase the efficiency of the intercity transportation system.
- Preserve environmental quality and protect California's sensitive environmental resources by reducing emissions and vehicle kilometers/vehicle miles traveled for intercity trips.
- Consult with resource and regulatory agencies during the tier 1 environmental review and use all available information for assessing the alternative that is most likely to yield the least damaging practicable alternative by avoiding sensitive natural resources (wetlands, habitat areas, conservation areas) where feasible.
- Maximize the use of existing transportation corridors and rights-of-way, to the extent feasible.
- Develop a practical and economically viable transportation system that can be implemented in phases by 2020, which would generate revenues in excess of operations and maintenance costs.

The capacity of California's intercity transportation system is insufficient to meet existing and future demand, and the current and projected future congestion of the system will continue to result in deteriorating air quality, reduced reliability, and increased travel times. The system has not kept pace with the tremendous increase in population and tourism in the state. The interstate highway system, commercial airports, and conventional passenger rail system serving the intercity travel market are currently operating at or near capacity and will require large public investments for maintenance and expansion in order to meet existing demand and future growth over the next 20 years and beyond. Moreover, the ability to expand many major highways and key airports is uncertain; some needed expansions may be impractical or may be constrained by physical, political, and other factors. Simply stated, the *need* for improvements serving intercity travel within California relates to the following issues.

- Future growth in demand for intercity travel.
- Capacity constraints that will result in increasing congestion and travel delays.
- Unreliability of travel stemming from congestion and delays, weather conditions, accidents, and other factors that affect the quality of life and economic well-being of residents, businesses, and tourism in California.
- Increasing frequency of accidents on intercity highways and passenger rail lines in congested corridors of travel.
- Reduced mobility as a result of increasing demand on limited modal connections between major airports, transit systems, and passenger rail in the state.

- Poor and deteriorating air quality and pressure on natural resources as a result of expanded highway and airports.

5. Factors Considered in Making This Decision

The analysis in the Final Program EIR/EIS confirms that the capacity of California's intercity transportation system is insufficient to meet existing and future demand, and the current and projected future congestion of the system will continue to result in deteriorating air quality, reduced reliability, and increased travel times. The state's intercity transportation system has not kept pace with the tremendous increase in the population and tourism in the state. The interstate highway system, commercial airports, and the conventional passenger rail system serving the intercity travel market are currently operating at or near capacity, and will require large public investments for maintenance and expansion in order to serve existing and future demand. The need for improvements serving intercity travel within California is described further in the Final Program EIR/EIS.

As described in the Final Program EIR/EIS, the purpose and objectives of the HST System, or program, which is identified as the Preferred HST Alternative, is to provide a reliable mode of travel that links the major metropolitan areas of the state and delivers predictable and consistent travel times, while also providing an interface with major commercial airports, public transit services, and the highway network and relieving capacity constraints in the existing transportation system in a manner sensitive to and protective of California's unique natural resources.

The need for a high-speed train system is directly related to the expected growth in population and resulting increases in intercity travel demand in California over the next twenty years and beyond. As a result of this growth in travel demand, congestion is expected to grow on California's highways and at airports. In addition, there will be effects on the economy and quality of life from diminishing reliability of the transportation system as travel demand increases. Air quality in and around California's metropolitan areas continues to be impaired and would worsen with more congestion. The intercity highway system, commercial airports, and conventional passenger rail serving the intercity travel market are currently operating at or near capacity, and will require large public investments for maintenance and expansion in order to meet existing demand and future growth.

The proposed high-speed train system would provide a new mode of high-speed intercity travel that would link the major metropolitan areas of California; interface with international airports, mass transit, and highways; and provide added capacity to meet increases in intercity travel demand projected for the year 2020 and beyond in a manner sensitive to and protective of California's unique natural resources.

The evaluation indicates that the Modal Alternative, improvement to existing highway and air modes of intercity travel, would help meet projected needs for intercity travel in 2020, but would not satisfy the purpose and objectives of the program as well as the HST alternative. In addition the capital cost of the Modal Alternative would be over two

times the estimated capital cost of the HST Alternative, and the Modal Alternative would have considerably less sustainable capacity than the HST Alternative to serve California's intercity travel needs beyond 2020.

The evaluation of the Final Program EIR/EIS also indicates that taking no action under the No Project Alternative would not meet the intercity travel needs projected for the future (2020 and beyond) as population continues to grow, and would fail to meet the purpose and objectives of the program which can be met by the Preferred HST Alternative. The No Project Alternative would result in environmental impacts but would not offer travel improvements compared to the Modal and HST Alternatives.

The evaluation of the Final Program EIR/EIS indicates that the HST Alternative is more effective in meeting the program objectives within the time frame needed and would result in fewer adverse impacts than the Modal or No Project Alternatives. The Preferred HST System Alternative would result in energy savings, air quality improvement and transportation capacity improvements, as compared to the No Project Alternative. In addition to meeting the program objectives, the Preferred HST System Alternative would also provide environmental benefits in the form of increased efficiency in energy use for transportation, decreased energy consumption [e.g., oil fuels consumption], improved air quality, improved travel conditions (including mobility, safety, reliability, travel times, and connectivity and accessibility) and reduced vehicle-miles-traveled for intercity trips. Given the environmental benefits it would provide and relative potential for adverse environmental impact, the HST Alternative is the environmentally preferable alternative.

6. Alternatives Considered

The Authority defined the HST Alternative through performance criteria building on information gathered in previous feasibility and corridor evaluation studies. To meet the travel time and service quality goals, the proposed statewide HST system would be capable of speeds in excess of 200 mph (320 kph) on fully grade-separated tracks with state-of-the-art safety, signaling, and automated train control systems. The criteria are based on accepted engineering practices, the criteria and experiences of other existing railway and HST systems, and the comments of HST manufacturers. These performance criteria are summarized in Table 1.

Table 1
HST Performance Criteria

Category	Criteria
System Design Criteria	Electric propulsion system. Fully grade-separated guideway. Fully access-controlled guideway with intrusion monitoring systems. Track geometry must maintain passenger comfort criteria (smoothness of ride, lateral acceleration less than 0.1 g).
System Capabilities	All-weather/all-season operation. Capable of sustained vertical gradient of 3.5% without considerable degradation in performance. Capable of operating parcel and special freight service as a secondary use. Capable of safe, comfortable, and efficient operation at speeds over 200 mph. Capable of maintaining operations at 3-minute headways. Capable of traveling from San Francisco to Los Angeles in approximately 2.5 hrs. Equipped with high-capacity and redundant communications systems capable of supporting fully automatic train control.
System Capacity	Fully dual track mainline with off-line station stopping tracks. Capable of accommodating a wide range of passenger demand (up to 26,000 passengers per hour per direction). Capable of accommodating normal maintenance activities without disruption to daily operations.
Level of Service	Capable of accommodating a wide range of service types (express, semi-express/limited stop, and local).

To guide the further definition of alignment and station options, additional engineering criteria and parameters were necessary. The additional criteria and parameters considered in the program-level environmental analysis are defined in the Engineering Criteria Report (January 2004). The Authority also set forth criteria for tunnels within the HST system, which would chiefly be within the northern or southern mountain crossing corridors, and criteria for potential intermediate and terminus station sites.

The performance criteria were applied in the initial broad consideration of possible HST corridors, alignments, and station locations, in the consideration of train technologies that could provide the desired high-speed service, in the framing of the system alternatives for analysis in the Program EIR/EIS, and also in selecting preferred corridor alignments and station locations, as discussed below.

6.1 HST Alternatives Eliminated from Further Consideration During the Scoping Phase

The following HST alternative technologies, corridors, alignments, and stations were eliminated from further consideration during the scoping phase of the project and prior to detailed programmatic environmental review:

- Steel-Wheel-on-Steel-Rail At Lower Speed (below 200 mph)—The Authority's enabling legislation defines *high-speed rail* as "intercity passenger rail service that utilizes an alignment and technology that makes it capable of sustained speeds of 200 mph (320 kph) or greater."
- Magnetic Levitation Technology and Steel-Wheel-on-Steel-Rail Electrified, Fully Dedicated Service—While a completely dedicated train technology using a separate track/guideway would be required on the majority of the proposed system, requiring such separation everywhere in the system would likely preclude direct HST service to certain heavily constrained terminus sections (i.e., San Francisco Peninsula from San Jose to San Francisco, and the existing [LOSSAN] rail corridor between Los Angeles Union Station and Orange County). Because of extensive urban development and severely constrained right-of-way, HST service in these terminus sections would need to share physical infrastructure (tracks) with existing passenger rail services in existing or slightly modified corridors.
- Corridors— HST corridor options evaluated and eliminated from further consideration are described in detail in Section 2.6.8 of the Final Program EIR/EIS. The eliminated corridors included a San Francisco to Los Angeles only corridor, which would not meet the objective of linking the major metropolitan areas of the state; coastal corridors generally following Highway 101 and Highway 1, which would result in greater impacts to sensitive natural and cultural resources, higher costs and slower travel due to challenging topography and waters; and an Interstate Highway 5 corridor, which failed to meet basic project objectives of maximizing intermodal opportunities, maximizing connectivity and accessibility, and providing transit connections and multi-modal stations, and additionally would result in increased incompatibility with land use planning. Also eliminated were the Capitol Rail Corridor (Sacramento to Oakland) and the Panoche Pass because they would not meet basic project objectives.

  Alignment and Station Options— Additional HST alignment and station options were evaluated and eliminated from further consideration using criteria related to the purpose and need and program objectives as described in detail in Section 2.6.9 of the Final Program EIR/EIS. The Authority's performance criteria (as summarized in Table 1) were applied through a screening evaluation, which focused on cost and travel time as primary indicators of engineering viability and ridership potential. Capital costs were estimated and travel times were quantified for each alignment and station option considered. Other engineering criteria such as operational, construction, and right-of-way issues were evaluated qualitatively.

6.2 Alternatives Considered in the Program EIR/EIS

No Project Alternative

The No Project/No Action (No Project) Alternative represents the state's transportation system, that serves the same intercity travel market as the proposed HST system, (highway, air, and conventional rail) as it is today and would be after implementation of programs or projects that are currently in regional transportation plans and have identified funds for implementation by 2020. Improvements that have been approved and funded in the fiscally constrained and conforming Regional Transportation Plans, State Transportation Improvement Plans, and airport development programs were considered part of the No Project Alternative.

Modal Alternative

The Modal Alternative represents a hypothetical, reasonable build alternative to the proposed HST system consisting of expansion of highways and airports serving the same geographic areas. Under this alternative, the proposed HST system would not be implemented, and the existing transportation infrastructure would be expanded to accommodate the anticipated future intercity travel demand in the same geographic markets as the HST Alternative. The Modal Alternative was developed to provide an equivalent capacity to serve a representative demand for intercity travel (an estimate based on the independent ridership and revenue forecasts prepared for the Authority also used to define the HST Alternative).

During the screening evaluation process, the Authority and the FRA considered both a highway-improvement only modal alternative and an airport-improvement only modal alternative. These alternatives were rejected because neither would be practical or feasible to serve the range of intercity trip lengths to be served by the HST system, and neither would meet the purpose and need and objectives for the system with regard to predictable and reliable travel times, safety, and protection of natural resources through avoidance of environmental impacts. Consideration was also given to improving the conventional passenger rail system to stand alone or serve as part of the modal alternative. This was rejected because it would not provide or assist in providing a competitive option to satisfy intercity travel demand. .

The Modal Alternative evaluated in the Program EIR/EIS includes a combination of potentially feasible highway and aviation system improvements that focus on quantifiable capacity enhancements. The improvements included: additional traffic lanes for highways with associated interchange reconfiguration and ramp improvements; additional gates and runways for airports with associated taxiways, parking, and passenger terminal facilities. For purposes of this analysis, the projected travel demand was allocated to the highways and airport facilities described under the No Project Alternative, to identify these improvements that would be necessary to serve the representative intercity travel demand in lieu of HST service. Existing conventional passenger rail was not included in this alternative because it would not meet the same intercity demand that would be served by the proposed HST system.

Proposed HST Alternative

The proposed HST system is a system over 700-miles long with electric propulsion and steel-wheeled trains capable of speeds in excess of 200 mph (322 kph) on a mostly dedicated system of fully grade-separated, access-controlled steel tracks and with state-of-the-art safety, signaling, communication and automated train control systems. The corridors considered in the Program EIR/EIS for the HST system are largely within or adjacent to existing transportation facilities or rights of way. These corridors connect and serve the state's major metropolitan areas, and potential station locations that could provide linkage with public transit services and the state's major commercial airports at multi-modal hubs.

Scoping and the screening evaluation led to identification of many HST alignment and station options for analysis in the Program EIR/EIS (See Section 2.6.9 of the Final Program EIR/EIS for more details). A range of HST design options are evaluated in the Program EIR/EIS, and key differences are addressed in the comparison of alternatives. Several major design option choices considered included the following:

- Northern Mountain Crossing: Mountain crossing options through the Coastal Mountain Range between the Central Valley and the Bay Area. Primarily two options: the Pacheco Pass through Gilroy and a northern crossing more directly aligned with San Jose.
- Southern Mountain Crossing: Mountain crossing options through the Tehachapi Mountain Range between Los Angeles and Bakersfield. Primarily two options: the I-5 corridor and a route through the Antelope Valley.
- Bay Area: Service options to the Bay Area along the peninsula to San Francisco and/or the East Bay to Oakland.
- Southern California: Service to Orange County in addition to service to San Diego via Inland Empire and the I-15 corridor.
- Shared-Use Options: Service to the urban centers on shared tracks with other passenger rail services. Based on the screening evaluation, the state-of-the-art high-speed steel-wheel-on-steel-rail technology considered for the system must also be capable of sharing tracks with other services at reduced speeds in heavily urbanized areas (i.e., San Jose to San Francisco, and Los Angeles to Orange County).
- Link to LAX: Direct or transfer to other transit system.

6.3 Preferred Program Alternative—HST Alternative

The following description of the HST Alternative is programmatic in nature and provides a broad planning and conceptual outline of the proposed train system, which is based on the information contained in the Final Program EIR/EIS and other reports included or referenced in the Final Program EIR/EIS.

The preferred HST system includes shared use corridors on the San Francisco Peninsula (Caltrain) and in southern California from Union Station in Los Angeles to Anaheim and Irvine. The preferred HST system also includes design practices to minimize impacts to resources, HST station development principles to foster smart growth, increase land use efficiency and minimize impacts to resources, and mitigation strategies to avoid and reduce environmental impacts. These practices, strategies and policies are described below in the discussion of impacts to resources.

The basic physical components of the proposed system include the trains and various structures. The trains are considered to include trainsets, communications, and signal and train control systems. The various structures that will make up part of the HST system include tracks and supporting structures, HST stations, and the electrical power system and facilities. These features may be briefly described as follows:

- Tracks and supporting structures include steel tracks for an HST system over 700 miles long, aerial structures and tunnels, grade separation and access-control features (fences, berms, signals, etc.)
- The electric propulsion and distribution system consisting of a 2x25KV overhead catenary system of poles and wires, as well as electric supply and booster stations
- HST multi-modal stations, intermediate and terminus, at thirty identified potential locations, that will generally include platforms, passenger facilities, baggage facilities, connections with public transit services, parking, and landscaping
- Cleaning, maintenance and storage facilities for the trains, at locations generally identified as facilities for light cleaning and maintenance located near termini in northern and southern California and facilities for heavy cleaning and maintenance located in the Central Valley.

The corridors proposed for the location of the preferred HST system are areas containing proposed alignments and multi-modal station sites. The corridors are conceptually described and represent routes for an over 700-mile long system providing for high-speed intercity passenger rail service between the major metropolitan areas of Sacramento and the San Francisco Bay Area in Northern California, through the Central Valley, to the Los Angeles area and Orange County and to San Diego via the Inland Empire. The preferred alignment and station locations are described briefly in the Summary in the Final Program EIR/EIS (section S.7) and depicted in the Final Program EIR/EIS.

The preferred alignment and station locations are described in detail in Chapter 6A of the Final Program EIR/EIS and can be briefly described by reference to five regional segments of the HST system as described below. The identification of preferred alignments was guided by public comments on the Draft Program EIR/EIS, the purpose and need of the HST system, and the Authority's objectives and criteria for evaluating alignments and station locations that were applied in scoping and the screening evaluation, as documented in Section 2.6.9 of the Final Program EIR/EIS.

Several factors were considered in identifying potential station stops, including speed, cost, local access times, potential connections with other modes of transportation, ridership potential, and the distribution of population and major destinations along the route.

The preferred station sites are all multi-modal transportation hubs that would provide links with local and regional transit, airports and highways. It is assumed that parking at the stations would be provided at market rates (no free parking). Each station site would have the potential to promote higher density, mixed-use, pedestrian-oriented development around the station. As the project proceeds to more detailed study, local governments would be expected to provide (through planning and zoning) for transit-oriented development around HST station locations, and to finance (e.g., through value capture or other financing techniques) and to maintain the public spaces needed to support the pedestrian traffic generated by hub stations if they are to have a HST station.

Preferred Alignment and Station Options

The preferred HST alignment and station options are listed by region as follows:

Bay Area-Merced

A broad preferred corridor between the Bay Area and the Central Valley containing a number of feasible route options within which further study will permit the identification of a single preferred alignment option. This corridor is generally bounded by (and includes) the Pacheco Pass (SR-152) to the south, the Altamont Pass (I-580) to the north, the BNSF Corridor to the east, and the Caltrain Corridor to the west (Highway route numbers are provided only as a convenient reference for the reader, not as a limitation on the corridor to be considered). The future additional study will also further consider the selected alignments and station locations in the Bay Area described below.

San Francisco Peninsula: Caltrain Corridor with potential stations at downtown San Francisco (Transbay Terminal), SFO (Milbrae), and Redwood City or Palo Alto.

East Bay Alignment: "Hayward Line to I-880" alignment with potential stations at Oakland (West Oakland) or 12th Street/City Center, Union City, and San Jose.

Sacramento-Bakersfield

Sacramento-Stockton: Union Pacific alignment option or the CCT alignment with potential stations at Downtown Sacramento and Downtown Stockton.

Stockton-Merced: Burlington Northern Santa Fe (BNSF) alignment option with potential stations at Modesto (Amtrak Briggsmore), and Merced (Castle Air Force Base or Downtown Merced).

Merced-Fresno: BNSF alignment option with a potential station at Downtown Fresno.

Fresno-Bakersfield: BNSF alignment option with a potential station at Downtown Bakersfield (Truxtun)

Bakersfield-Los Angeles

Bakersfield-Sylmar: SR-58/Soledad Canyon Corridor (Antelope Valley) with a potential station at Palmdale Airport/Transportation Center.

Sylmar-Los Angeles: MTA/Metrolink with potential stations at Downtown Burbank (Burbank Metrolink Media Station) and Los Angeles Union Station.

Los Angeles to San Diego via the Inland Empire

Los Angeles to March AFB: UPRR Riverside/UPRR Colton Line alignment option with potential stations at East San Gabriel Valley (City of Industry), Ontario Airport, and Riverside (UC Riverside).

March AFB-Mira Mesa: I-215/I-15 alignment with potential stations at Temecula Valley (Murrieta), and Escondido.

Mira Mesa-San Diego: Carroll Canyon or Miramar Road alignment option with potential stations at University City and Downtown San Diego (Santa Fe Depot).

Los Angeles to Orange County

Los Angeles to Irvine: LOSSAN Corridor with potential stations at Norwalk, Anaheim Transportation Center, and Irvine Transportation Center.

6.4 Environmentally Preferred Alternative

The HST Alternative would have similar types of adverse environmental impacts as the Modal Alternative. However, the HST Alternative would provide environmental benefits in the form of increased efficiency in energy use for transportation, decreased energy consumption [e.g., oil fuels consumption], improved air quality, improved travel conditions (including mobility, safety, reliability, travel times, and connectivity and accessibility) and reduced vehicle-miles-traveled for intercity trips. For these reasons, the HST Alternative was identified as the preferred system alternative in the Draft Program EIR/EIS, and is identified as the environmentally preferable alternative under NEPA as well as the environmentally superior alternative under CEQA.

7. Summary of Potential Beneficial Environmental Effects

The potential environmental, transportation, land use, economic, and social beneficial effects of the HST Alternative are summarized below.

The HST Alternative would benefit the transportation system by:

- Meeting the need for a safe and reliable mode of travel that would link the major metropolitan areas of the state and deliver predictable, consistent travel times sustainable over time.
- Providing quick, competitive travel times between California's major intercity markets (Table 2).

- Providing door-to-door travel times for longer distance intercity markets that would be comparable to air transportation and less than one half as long as automobile travel times.
- Providing considerably quicker travel times for intermediate intercity trips than either air or automobile transportation and bringing frequent HST service to many parts of the state that are not well served by air transportation.
- Providing a new intercity, interregional, and regional passenger mode—the high-speed train—, which would improve connectivity and accessibility to other existing transit modes and airports compared to the other alternatives.
- Improving the travel options available in the Central Valley and other areas of the state with limited bus, rail, and air service for intercity trips.
- Providing system redundancy in cases of extreme events, such as adverse weather or petroleum shortages
- Providing a predominantly separate transportation system that would be less susceptible to many factors influencing reliability, such as capacity constraints, congestion, and incidents that disrupt service.
- Providing superior on-time reliability.
- Providing a lower accident and fatality rate than automobile travel.
- Offering greater opportunities to expand service and capacity with minimal expansion of infrastructure.
- Adding capacity to the state's transportation infrastructure and reducing traffic on certain intercity highways and around airports to the extent that intercity trips are diverted to the HST system.
- Eliminating delays at existing at-grade crossings where the HST system would provide grade separation.
- Decreasing injuries and fatalities due to diversion of trips from highways, improving connectivity, and adding a variety of connections to existing modes, additional frequencies, and greater flexibility.

Table 2
Estimated Total Travel Times (Door to Door) between City Pairs by Auto, Air, and HST in 2020 (Hours:Minutes)

City Pairs	Auto[1] (No Project Alternative)	Air (No-Project Alternative)		HST (HST Alternative) (Optimal Express Time)	
	Total	Line Haul[2]	Total	Line Haul[2]	Total
Los Angeles downtown to San Francisco downtown	7:57	1:20	3:32	2:35	3:30
Fresno downtown to Los Angeles downtown	4:30	1:05	3:02	1:22	2:33
Los Angeles downtown to San Diego downtown	2:49	0:48	3:00	1:13	2:16
Burbank (Airport) to San Jose downtown	6:50	1:00	3:14	1:49	2:52
Sacramento downtown to San Jose downtown	2:40	No service	No service	0:50	1:53

1 Auto trips are assumed to be "point to point" and therefore do not have a line-haul (time in vehicle) time associated with their travel times.
2 Time in airplane or train.
Source: Parsons Brinckerhoff.

The HST Alternative would benefit the environment by:

- Using existing transportation corridors and rail lines to minimize the impacts on California's landscape.
- Avoiding and/or minimizing the potential impacts to cultural, park, recreational and wildlife refuges to the greatest extent possible.
- Decreasing air pollutants statewide and in all air basins analyzed by reducing pollution generated by automobile combustion engines.
- Lowering total energy consumption (HST system uses less energy to move passengers than either airplanes or automobiles).
- Reducing noise in locations where grade separations eliminate horn and crossing gate noise at existing grade crossings.

The HST Alternative would provide land use benefits by:

- Being highly compatible with local and regional plans that support rail systems and transit oriented development and offering opportunities for increased land

use efficiency (i.e., higher density development and reduced rate of farmland loss).

- Meeting the need for improved inter-modal connectivity with existing local and commuter transit systems.
- Providing multi-modal transportation hubs that link with local and regional transit, airports, and highways.
- Increasing public benefits beyond the benefits of access to the HST system itself, including relief from traffic congestion, improved air quality, promotion of infill development and preservation of natural resources, increased stock of affordable housing, promotion of job opportunities, reduction in energy consumption, and improved cost-effectiveness of public infrastructure.
- Promoting the State's adopted smart growth principles and being a catalyst for wider adoption of smart growth principles in communities near HST stations.
- Encouraging infill development and thereby helping to protect environmental and agricultural resources by encouraging more efficient land use and efficient and compact development.

The HST Alternative would create economic benefits by:

- Providing revenue generated by the system, economic growth generated by construction and operation of the system, benefits from reduced delays to air and auto travelers, reduced air pollution, reduced accidents and fatalities and economic advantages related to proximity to the HST system.
- Reducing airport delays (by diverting some airline passengers to high-speed trains), thereby reducing aircraft operating costs.
- Creating denser development, which would accommodate more population and employment on less land. The HST Alternative would result in a slight decrease in urban area growth.
- Creating a statewide increase of 450,000 jobs between 2002 and 2035.
- Providing a location advantage to those areas that are in proximity to an HST station through improved accessibility to labor and customer markets, thereby potentially improving the competitiveness of the state's industries and the overall economy.

The HST Alternative would create social benefits by:

- Providing a new intercity, interregional, and regional passenger mode that would improve connectivity and accessibility to other existing transit modes and airports.
- Improving the travel options available in the Central Valley and other areas of the state with limited bus, rail, and air service for intercity trips.
- Providing travel options for some people who would not otherwise make trips.

- Enhancing and strengthening urban centers. In combination with appropriate local land use policies, the increased accessibility afforded by the high-speed service could encourage more intensive development and may lead to higher property values around stations.

8. Summary of Potential Adverse Environmental Impacts

Potential adverse environmental impacts from the HST Alterative are identified in the Final Program EIR/EIS and are summarized in the following sections. Temporary and construction related impacts are addressed in each appropriate resource topic. The Program EIR/EIS considers the potential for environmental impact related to travel conditions, movement of goods, and emergency access and found that the HST Alternative would have beneficial attributes system-wide.

8.1 Traffic and Circulation

Despite some expected improvement in highway conditions in areas to be served by the HST system, the level of service (LOS) on local roadways in many of these areas is currently poor (ratios of more than 1.0 on average for each of the five regions) and would remain so even with the HST system. The operation of the HST system would result in increased traffic around HST station locations and increased congestion on highway and roadway segments which would provide access to stations.

The construction of the HST system would result in short-term impacts of increased traffic in areas affected by the construction process for the duration of the construction in that area. In a few areas the HST system would result in closure, either temporary or permanent, of local roadways, that in turn would result in increased traffic on nearby roads and longer travel routes for some travelers.

While localized increases in traffic and congestion near HST station areas and during construction are significant at the programmatic level of analysis, mitigation strategies have been identified that can reduce this impact below the level of significance. Adverse impacts related to parking or public transportation are not expected because mitigation strategies have been identified that can avoid these impacts.

8.2 Air Quality

With the HST system, around certain HST stations an increase in traffic and congestion is expected along with a related localized increase in vehicle-generated air pollution. At the program level this localized impact is considered significant, because of uncertainty, since it is not possible to know the exact location, extent, and characteristics of increased traffic and congestion that will be generated around various HST station sites. While potential localized increases in vehicle-generated air pollution are considered significant at the program level, mitigation strategies have been identified that can reduce this impact to a less than significant level.

Construction impacts associated with the HST system include emissions from various activities, such as the use of diesel equipment, soil disturbance, and congestion-related traffic and route changes, all of which are expected to generate temporary short-term localized increases in air pollution. While this impact is considered significant at the program level, mitigation strategies have been identified that can reduce this impact to a less than significant level.

8.3 Noise & Vibration

The HST could create long-term noise impacts along the alignment segments from train operations by creating intermittent increased noise. As a newly constructed system, the HST system would be far quieter than typical passenger and freight trains. Construction of the HST could also cause short-term construction-related noise impacts. Significant noise impact from operations will not occur along the entire HST system alignment. Rather, the impact would be localized, because certain areas along the proposed HST system alignment have no sensitive receptors, and because trains speeds are slower in some places leading to lower noise impact ratings. While this impact is considered significant at the program level, mitigation strategies have been identified that can reduce this impact to a less than significant level.

The HST system could cause an increase in ground-borne vibrations when the HST passes by an area. The ground-borne vibration impact would not occur along the entire length of the HST system alignment. Rather, the EIR identified 10-60 miles of the HST alignment that could be subject to vibration impacts. Construction activities can also cause some short-term ground-borne vibration. While this impact is considered significant at the program level, mitigation strategies have been identified that can reduce this impact to a less than significant level.

8.4 Energy

The HST System would be constructed in phases and is expected to draw power from the statewide electrical grid, which receives power from many sources. The HST system would result in an increase in demand on the statewide electricity supply that could reach 480 MW or 0.6% of projected statewide electricity demand in 2020. With proper planning and design of the power distribution facilities for the HST system in relation to the overall state electrical grid, localized impacts from providing electricity to the HST system can be avoided. Electric power impacts are not expected because mitigation strategies have been identified that can avoid these impacts.

Construction of the HST System would result in one-time non-recoverable energy consumption costs that would be similar in scale to the energy consumption requirements that would be needed for the Modal Alternative, and would be in addition to energy consumed by the planned transportation improvements included in the No Project Alternative. The result of the construction of the HST system would be a new transportation mode that would reduce fuel consumption as compared to the 2020 No Project Alternative. While this impact is considered significant at the program level,

mitigation strategies have been identified that can reduce this impact to a less than significant level.

8.5 Electromagnetic Fields and Electromagnetic Interference

The operation of the HST system could generate additional levels of exposure to electromagnetic fields. The level of exposure will depend on a number of factors that will vary depending on the alignments and operations, including design of power supply systems and vehicles, to be decided at the project-level of design. The HST catenary and distribution systems will operate primarily at 60-Hz fields, which is considered an extremely low frequency (ELF). Because of their rapid decrease in strength with distance, EMFs in excess of background levels are likely to be experienced only relatively near sources.

There is no scientific consensus that there are adverse effects of low-level EMF. Numerous studies have addressed but failed to establish any significant adverse health effects, and various industry, government and scientific organizations with expertise in electromagnetic fields technology have produced a range of voluntary standards that represent their best judgment of what levels are considered safe. The extremely low frequency EMF that result from the operation of the HST system is substantially below any of the standards examined by these experts. The EMFs may interfere with HST maintenance workers' implanted biomedical devices, but there is little potential to interfere with implanted biomedical devices of other workers, passengers or nearby residents. Consequently, based on the review of the scientific evidence, the increased levels of EMF as a result of the HST system operation are less-than-significant at a programmatic, system-wide level, without mitigation and mitigation strategies have been identified that can avoid or reduce EMF exposure.

The HST would generate incidental radiofrequency (RF) fields, and would also use wireless communications that generate radiofrequency fields. Radiofrequency fields would also be produced at the right of way by intermittent contact (unintentional arcing) between the pantograph power pickup and catenary wire. The HST Alternative would introduce additional electromagnetic interference at levels for which there are no established adverse impacts and RF regulations would be complied with. Mitigation strategies have been identified that can avoid EMI.

8.6 Land Use, Communities, Property and Environmental Justice

The HST system would involve laying new track and installing electric power distribution facilities for the HST system and of providing multi-modal transit stations as part of the HST system. Maintenance, storage and cleaning facilities will be part of the HST system, and general potential locations for these facilities were identified in order consider the representative impacts of such facilities in the program analysis. Locations for these facilities will be determined in conjunction with future project-level studies and decisions on implementation phasing. The strategies of placing the proposed HST system in or along existing transportation corridors (existing railroad or highway rights of way) and requiring stations to be multi-modal transit hubs serve to reduce the extent of

land acquisition needed for the proposed new HST system, and serve to limit the extent to which adjacent land uses would be inconsistent or incompatible with the HST system. While 70% of the preferred HST system corridor alignments identified in the Final Program EIR/EIS are either within or adjacent to existing transportation corridors, some property acquisition and relocations will be necessary.

In some areas, the installation of the HST system could affect land uses by creating a new barrier dividing or disrupting existing communities. In addition to the above noted potential impacts of the HST system resulting in a new barrier or dividing some established communities, short term impacts of the HST system during construction include potential neighborhood disruption and division. This impact would be reduced by phasing the construction of segments of the system and by the use of in-line construction techniques where appropriate.

Potential impacts to low-income and minority populations located near the HST system. Using a study area of .25 mile [.40 km, about 1200 feet] and information from the U.S. Census for the year 2000, the Program EIR/EIS identified areas along the HST system likely to have at least 50% low income or minority populations and areas in which the percentage of low-income or minority populations may be at least 10% greater than the average for the area. These will be areas for further study during project-level environmental analyses when more detailed and specific information will be developed for the HST alignments and designs (e.g., whether aerial, at-grade, or below grade). The number and location of people affected and the extent of impacts cannot be determined without the additional information to be provided in project-level studies. Viewed on a systemwide basis, the proposed HST system is not expected to result in disproportionate impacts on minority and low-income populations. The HST system would cross a wide variety of community types in widely varied geographic settings, including rural, urban, and suburban, with various levels and mixes of development. The design practices and engineering criteria used in developing the HST system also serve to reduce impacts to people, including low-income and minority populations near HST facilities, by, among other things, placing the HST system in or along existing transportation corridors. Also, the installation of grade separations will reduce existing horn noise and help maintain local access and community connections.

The identified mitigation strategies will substantially lessen or avoid land use impacts; however, sufficient information is not available at the program-level to conclude with certainty that mitigation will reduce this impact to a less than significant impact in all circumstances.

8.7 Agricultural Lands

The HST could convert to non-agricultural uses between approximately 2445 to 3860 acres of important farmland (i.e., farmland listed as prime, statewide important, unique, and farmland of local importance on the Department of Conservation's Farmland Mapping and Monitoring Program (FMMP)).

The HST would cause some farmland severance (division of one farmland parcel into two or more areas of operation by the placement of a barrier through the parcel) in the

Sacramento to Bakersfield region. This impact could arise where the HST alignment options considered in the EIR would bypass urban areas on new corridors traveling mainly north-northwest to south-southwest, thereby diagonally dividing a number of north-south oriented farming parcels. The potential for this impact has been reduced because few bypass alignment options have been selected for further study.

While the identified mitigation strategies described above will substantially lessen this impact, it is unclear absent site-specific information that this impact can be mitigated to a less-than-significant level over the entire HST system.

8.8 Aesthetics and Visual Resources

The construction and operation of the HST system would alter existing scenic landscapes and cause impacts on visual resources related to the addition of infrastructure in, or removal of infrastructure from, the existing landscape. The infrastructure may include construction and improvements of the HST system, tunnels, fences, noise walls, elevated guideways, catenaries (support-pole systems for power supply for trains), and stations. Visual impacts will have a higher sensitivity in areas of scenic open space and mountain crossings. The programmatic analysis of the visual impacts included photo simulations of conceptual design of the facilities associated with the HST system for a set of types of representative landscapes for each segment of the proposed corridors, and concentrated on the locations where the plans show elevated structures, tunnel portals, or areas with extensive cut or fill.

While the mitigation strategies described above will substantially avoid and lessen impacts to aesthetics and visual resources, it is uncertain absent site-specific information that this impact can be mitigated to a less-than-significant level over the entire HST system.

8.9 Public Utilities

Improvements associated with the proposed HST system could cause conflicts with a pipeline or facility associated with a utility. This programmatic evaluation considered three of the most common major fixed facilities that may pose construction challenges as representative utility conflicts: electrical transmission lines, natural gas facilities, and wastewater treatment facilities. The HST system could result in up to 21 potential fixed-facility conflicts (high-impact conflicts), and up to 821 conflicts with utility transmission or pipelines (low-impact conflicts). These low-impact conflicts are not considered significant because they could generally be avoided, minimized, or mitigated by routing either the public utility or the HST system around, over, or under the facility. While this impact is considered significant at the program level, mitigation strategies have been identified that can reduce this impact to a less than significant level.

8.10 Hazardous Materials and Wastes

Construction and operation of the HST system could cause impacts to existing hazardous materials or waste sites. Operation of the HST system is not expected to generate hazardous waste. Potentially significant impacts are expected from HST station or maintenance facility conflicts with a known contaminated sites (listed on the federal National Priorities List (Superfund list), the State Priority List, and the California Integrated Waste Management Board's list of solid waste landfills in the State of California). While this impact is considered significant at the program level, mitigation strategies have been identified that can reduce this impact to a less than significant level.

8.11 Cultural and Paleontological Resources

The HST could impact prehistoric or historic archaeological resources and traditional cultural properties by causing physical destruction or damage during construction. Archaeological resources include both sites. The HST could impact historic properties and resources by causing physical destruction or damage. The HST could also impact paleontogical resources as a result of construction, including grading, cutting, tunneling, erecting pylons for elevated track, and due to station construction. While mitigation strategies have been identified that will substantially lessen or avoid these impacts, sufficient information is not available at the program level to conclude with certainty that mitigation will reduce this impact to a less than significant level in all circumstances.

8.12 Geology and Soils

Seismic hazards evaluated include ground shaking and ground failure. The HST could cause risks to workers and public safety due to the collapse or toppling of facilities, either during construction or after completion, due to strong earthquakes. The HST also could create risks to public safety from automobile accidents or the interruption of automobile circulation, if strong earthquakes cause a derailment. HST facilities could sustain damage due to secondary hazards (settlement) over soft or filled ground

The HST could cause risks to workers and public safety due to ground rupture along active faults, either during construction or after completion. The HST also could create secondary public safety risks caused by damage to highways or airports, or interruption of these transportation services, in the event of train derailment caused by ground rupture along active faults.

The HST could also cause risks to workers and public safety due to the failure of natural or construction cut slopes or retention structures. The HST alignment could cross areas with hard, unfractured bedrock that will be difficult to excavate using methods other than blasting, which may pose a safety risk. Faulted materials that may be present can result in instability in the face of a tunnel area, another hazard. The HST could create the potential for migration of potentially explosive and/or toxic gases into subsurface facilities, such as tunnels or underground stations.

While the above impacts are considered significant at the program level, mitigation strategies have been identified that can reduce these impacts to a less than significant level.

8.13 Hydrology and Water Quality Impacts

The HST system could encroach on floodplains in each segment. Encroachment into the flood plain by the HST system is anticipated to be between 1865 and 3873 acres system wide. Floodplain encroachment may result in increased flood height from earthen berms or linear barriers to surface water flow.

The HST system could encroach on surface water resources. The representative footprint of the HST system would encroach on between 22,600 to 32,400 linear feet of streams, while encroachment onto lakes would between 7 to 27 acres. The HST would also add impervious surface area, which can reduce water infiltration, contribute to runoff, and negatively affect surface water quality. The HST could cause erosion, which can negatively affect water quality, where the alignment options would extend to or along the coast along highly erodable slopes.

The HST system may encounter groundwater during construction of at- and above-grade structures, tunnels and tunnel portals, and dewatering may be necessary. In addition, construction and operation of the HST system components may affect groundwater recharge.

While the above impacts are considered significant at the program level, mitigation strategies have been identified that can reduce these impacts to a less than significant level.

8.14 Biological Resources and Wetlands

The HST system's direct impacts to biological resources was assessed along alignments using a representative 50 feet total facility footprint for both at-grade and aerial structures. The HST system's potential for indirect effects on species and habitats due to noise, light, or shadows, a larger area was evaluated using a larger area that varied depending on the nature of the location. Sensitive habitat areas included a study envelope that was ½ mile on either side of the alignment centerline, or a 1-mile wide corridor. In urbanized areas, the study envelope was 1000 feet on either side of the alignment centerline.

The HST system could directly impact between 1201 to 1568 acres of natural communities and wildlife habitat that are unique, of relatively limited distribution in a region, or of particularly high wildlife value habitat. The HST system could also fragment existing habitats. The Final Program EIR/EIS indicates there are between 9773 to 17,619 acres of sensitive vegetation that may be indirectly affected by the HST system. The sensitive vegetation acreage range is based on the buffer areas included in the HST study area, which were designed to provide context to the impacts analysis, and are likely to be much larger than the actual indirect effect.

Wildlife movement/migration corridors link together areas of suitable wildlife habitat that are otherwise separated by rugged terrain, changes in vegetation, or human disturbance. The HST system has the potential to affect wildlife movement/migration corridors where the alignment crosses wildlife movement corridors. In addition, fences that will be required for at-grade tracks will introduce a new barrier to animal movement. The actual impact will depend on the selection of final alignment and the final design of structures for the HST system.

Within the larger study envelope for the HST system (1-mile wide corridor in sensitive areas) there are up to 1.2 million linear feet of non-wetland jurisdictional waters (lakes, rivers, streams, and other water bodies). The HST system has the potential to directly or indirectly affect some of these resources.

The HST system could directly impact 30-89 acres of wetlands. The Final Program EIR/EIS indicates there are between 3996 and 18,356 acres of wetlands in the study area, which may be indirectly affected by the HST system.

The HST system has the potential to affect fishery resources during construction due to the need to cross streams and rivers. Construction activities could increase sediment loads in stormwater during rain, or be a source of chemicals, both of which could be released into creeks and harm aquatic resources.

The HST system could directly impact 67-84 special status species based on the representative facility footprint. The study area for the HST system indicates the possible presence of 279 to 350 special status species within the area of potential indirect effect from the HST system. Some of these species could be affected by the construction and the operation of the HST system.

While the mitigation strategies identified will substantially lessen or avoid this impact, sufficient information is not available at the program level to conclude with certainty that mitigation will reduce this impact to a less than significant level in all circumstances.

8.15 Public Parks, Recreation, and 4(f) Resources

The HST system could to result in impacts to parks and recreation resources, including publicly owned parks, wildlife and waterfowl refuges, historic sites of national, state or local significance, and other recreational resources covered by either section 4(f) of the Department of Transportation Act (49 U.S.C. § 303(c) or section 6(f) of the Land and Water Conservation Fund Act of 1965 (16 U.S.C. § 460l-8).

The HST system could result in direct impacts to lands containing publicly owned parks and recreational resources by causing use of such lands for the placement of HST facilities, and could result in indirect impacts to these resources due to construction activities or HST system operations which adversely affect the use of publicly owned parks and recreational resources. In addition to addressing noise, biology, and air quality impacts in other sections of these Findings, the Program EIR/EIS identifies the park and recreational resources located within 900 feet of the centerline of HST alignments or facilities. No state parks would be crossed or bisected by the HST

system. The EIR, however, identified five state parks that may be within 900 feet of the HST system. Additionally, certain local, regional or federal recreational resources could be affected.

At the program level it is not possible to know precisely the location, extent and particular characteristics of impacts to park resources. Due to this uncertainty, for the purposes of system-wide review at the programmatic level, this impact is considered significant. While mitigation strategies have been identified that would substantially lessen or avoid these impact, sufficient information is not available at the program level to conclude with certainty that mitigation will reduce this impact to a less than significant level in all circumstances.

8.16 Cumulative Impacts

Implementation of the HST system could lead to local and regional cumulative effects related to:

- Surface streets leading to and from the intercity highways and airports;
- Localized travel conditions;
- Air quality within the six-basin study area (in combination with the air quality impacts of other highway projects or airport improvements identified for the cumulative impact analysis and those projects considered in the state implementation plan for air quality);
- Noise and vibration;
- Community and neighborhood cohesion and property loss;
- Community/neighborhood impacts (in combination with other transit and roadway projects these localized impacts could contribute to cumulative);
- Land use impacts to various property types, neighborhoods, and communities (in combination with other transit extension and roadway projects);
- Conversion of agricultural land to non-agricultural use;
- Visual resources;
- Public utilities and future land use opportunities (because of right-of-way needs, extensive utility relocation, and property restrictions associated with construction of multiple linear facilities and other reasonably foreseeable future projects in the study area);
- Cultural and paleontological resources;
- Geology and soils related to slope stability in various proposed locations of cut and fill and areas susceptible to slope failure; and related to subsidence if other projects under construction in the area also needed to dewater from the same drainage basin;
- Hydrologic resources;

- Sensitive biological resources and wetlands;
- Parklands and recreational resources; and
- Indirect effects (such as to waterways, wetlands, sensitive habitat and sensitive species) related to the increment of growth associated with the HST system, but anticipated by local general plans, which was projected for the period from now until 2035, recognizing that growth related to the HST system would occur in the future after early implementation steps for the HST system have been taken.

While identified mitigation strategies will substantially lessen or avoid these effects, sufficient information is not available at the program-level to conclude with certainty that mitigation will reduce the HST system's contribution to cumulative effects in all circumstances. To assure that potential cumulative effects will be fully examined in the future, project level studies will incorporate analyses of impacts to waterways, wetlands, sensitive habitat and species based on appropriate regional study areas beyond the sites immediately affected by the HST project. To assure that appropriate planning for HST station areas is undertaken so as to avoid indirect effects associated with growth, station area development strategies are described in Chapter 6B of the Final Program EIR/EIS and are included in the MMRP.

8.17 Growth-Inducing Effects

Transportation investments can lead to reduced travel time or cost, improved accessibility to regions or parts of regions, or reduced accidents or air pollution. These effects contribute to economic growth by allowing time and money previously spent on travel to be used for other purposes, attracting businesses and residents to places with increased accessibility or improved quality of life, and reducing overall costs to society. The population and employment growth that result from economic growth comprise the growth-inducing effects of transportation investments such as the HST system. This growth can contribute to additional impacts beyond those directly attributable to the changes in the transportation system, which the EIR refers to as growth-related indirect impacts. The incremental growth associated with the HST system is not expected to result in a significant increase in demand for municipal services. The timeframe within which incremental growth associated with the HST system would be expected is within normal planning horizons and within the purview of the local and regional agencies responsible for planning for municipal services to address.

Population Effects: Statewide population is expected to grow by about 54% between 2002 and 2035 under the No Project Alternative. Compared to the No Project Alternative, the statewide population growth is projected to be roughly 2% higher under the HST System Alternative. These population differences among alternatives represent the increased accessibility provided by the transportation investments. An investment in HST is projected to lead to greater economic growth within the state than the No Project Alternative. These statewide figures follow the same general pattern at the regional level, with the exception of the Northern Central Valley, where population growth is projected to be about 4% higher under the HST System Alternative than under the No Project Alternative.

Employment Effects: Statewide employment is expected to increase by about 46% between 2002 and 2035 under the No Project Alternative. Compared to the No Project Alternative, statewide employment growth is projected to be roughly 2% higher under the HST System Alternative.

Land Urbanization Effects: Urbanized areas in California are expected to grow by 48% between 2002 and 2035 under the No Project Alternative, representing an increase of about 1.5 million acres over the approximately 3.1 million acres in the existing urbanized areas in the counties where HST facilities would be located. Compared to the No Project Alternative, the HST System Alternative is expected to have about 0.1% less growth in urbanized areas, which is about 2600 fewer acres. The HST System Alternative compared to the Modal Alternative would use 68,100 fewer urbanized acres than the Modal Alternative. The HST System Alternative would therefore be able to accommodate more population and employment growth on less land than the No Project Alternative and is not expected to have an adverse effect on urbanization statewide.

Regional Growth Effects: For the HST System Alternative, population in the Central Valley is expected to experience a small increase in both net growth and distributive effects as compared to the No Project Alternative. Because such growth would occur well in the future after the initiation of HST service, the locations in which such growth may occur cannot be predicted, although potential regional effects were considered in the land urbanization analysis.

Indirect/Secondary Effects from Growth: The HST Alternative may have a positive (i.e., result in an increase), but small, statewide effect on population and employment growth compared to the No Project Alternative. Despite the relatively small magnitude of the expected growth, the growth could contribute to indirect impacts on the human and natural environment. Many of these indirect, growth-related impacts derive from increased urbanization needed to accommodate the additional population and employment. However, the additional growth expected from the HST System Alternative over the No Project Alternative in 2035 is expected to be accommodated on a similar amount of land, and the growth of urbanized area in acres would be smaller under the HST System Alternative, than under the Modal Alternative.

No indirect, growth-related effects from implementing the HST system are expected to the following resource areas: energy, noise and vibration; exposure to EMF or EMI; public utilities; exposure to hazardous materials or wastes; cultural resources; geology and soils; and public parks and recreation. Indirect aesthetic impacts from induced growth under the HST System Alternative are considered speculative.

Overall traffic conditions are expected to improve with the HST system, despite the estimated 2% increase in population and employment under the HST System Alternative. Some increase in local traffic around HST stations, consistent with this increased growth, is expected.

Air quality is expected to improve with the HST system, however, the increased population and employment growth may contribute to increased mobile-source air pollutants due to increased traffic around stations.

Socioeconomic changes from growth under the HST System Alternative are expected to be small, and therefore indirect land use compatibility impacts from induced growth are also expected to be small. Growth under the HST System Alternative would be distributed across various communities, would be reflected in infill development and increased development densities, and is not expected to result in a significant increase in demand for municipal services. Planning for such services is within the purview of local and regional agencies and expected growth in the future would be within typical planning horizons for such services.

Growth under the HST System Alternative is expected to impact 4100 fewer acres of important farmland on a statewide basis than the No project Alternative.

Growth under the HST System Alternative is expected to impact about 270 miles more of waterways than the No Project Alternative, or about 7% more. The largest percentage of this increase is expected to occur in Southern California. The HST System Alternative is expected to affect fewer waterways in the Northern Central Valley region than the No Project Alternative due to induced growth. The Northern Central Valley is projected to experience a decrease in acreage of habitats potentially affected by growth.

Growth under the HST System Alternative has the potential to affect up to 8400 acres more of land which may contain some threatened and endangered species habitat on a system-wide basis than the No Project Alternative. The largest percentage increase is expected to occur in the Bay Area, while the largest acreage increase is expected in the Southern Central Valley. Growth under the HST System Alternative has the potential to affect about 330 acres more containing some wetlands on a system-wide basis than the No Project Alternative, or about 1% more. The largest acreage and percentage increase is project to occur in the Northern Central Valley, whereas Southern California is expected to exhibit a reduction in wetland loss due to future urbanization.

The specific location(s), size, scope and attributes of specific growth related projects that may be proposed in the future cannot be predicted, nor can the outcome of public agency approval processes and the ultimate configuration of any approved projects be predicted. When making future decisions regarding both the final selection of station locations and the timing of station development, the extent to which appropriate Station Area Plans and development principles have been adopted by local authorities will be considered. Denser development near HST stations will concentrate growth in areas conveniently located near stations, reducing the need to convert land to urban use and improving conditions for comprehensive and extensive local transit systems. Local governments would play a significant role in implementing station area development by adopting plans, policies, zoning provisions, and incentives for higher densities, and by approving a mix of urban land uses. Station Area Plans and development principles are included in the MMRP and can be expected to substantially avoid and reduce adverse environmental effects related to growth.

9. Measures to Minimize Harm

The Authority has committed to use all practicable means, including design practices and mitigation strategies, to avoid or minimize adverse effects on the environment that would result from the implementation of the HST Alternative. To minimize potential future harm from implementation of the proposed HST system, future project-level environmental analysis and documentation will review and prescribe the design practices and mitigation strategies described in the Authority's adopted Mitigation Monitoring and Reporting Plan included as Appendix A.

Chapter 3 of the Final Program EIR/EIS describes program-level mitigation strategies to minimize or mitigate adverse environmental impacts. The monitoring and enforcement program is to apply this plan during the project-level environmental compliance process. Some mitigation strategies may cause other adverse environmental impacts at the same time that they mitigate impacts addressed in this Program EIR/EIS. Future tiered project-level environmental reviews will determine appropriate site-specific mitigation measures.

9.1 Design Practices

The Authority would employ design practices identified in the Final Program EIR/EIS as the HST Alternative is developed further in the project-level environmental review, final design and construction stages. These practices will be applied to avoid and minimize potential adverse environmental impacts. Design practices are incorporated in the Mitigation Monitoring and Reporting Plan and are illustrated below.

- Existing transportation corridors would be used. Nearly 70% of the adopted preferred HST alignments are either within or adjacent to a major existing transportation corridor (existing railroad or highway right-of-way).
- Tracks that are fully grade separated from all roadways would be used.
- Multi-modal transportation hubs would be used.
- Some of the preferred alignments would be in a tunnel or trench section, which would reduce noise.
- Electric power, high-quality track interface, and smaller, lighter and more aerodynamic trainsets would be used, which would result in less noise than existing commuter and freight trains because HST do not have the rumble associated with diesel engines and use a design that greatly minimizes track noise.
- Transit-oriented design and smart growth land use policies would be used. Station area development principles that would be applied at the project-level for each HST station and the areas around the stations would include:
    - Higher density development.
    - A mix of land uses (retail, office, hotels, entertainment, residential, etc.) and housing types to meet the needs of the local community.

  - A grid street pattern and compact pedestrian-oriented design that promotes walking, bicycle and transit access.
  - Context-sensitive building design that considers the continuity of the building sizes and coordinates the street-level and upper-level architectural detailing, roof forms, and rhythm of windows and doors.
  - Limits on the amount and location of development-related parking, with a preference that parking be placed in structures.
- Portions of the system would be in tunnel or on aerial structure, which would avoid and/or minimize impacts to surface water resources.
- Measures to avoid water infiltration would be taken.
- Underpasses or overpasses or other appropriate passageways would be designed to avoid, minimize and/or mitigate any potential impacts to wildlife movement.
- In-line construction would be used for sensitive areas.

10. Relationship to Other Plans

The No Project Alternative included planned and programmed transportation improvements in fiscally constrained plans. Proposed improvements to the LOSSAN corridor from Los Angeles to San Diego for passenger train services at speeds under 125 miles per hour, and not under the jurisdiction of the Authority, are being considered by the FRA and the California Department of Transportation, and were studied cooperatively with the Authority. These improvements are the subject of a separate Program EIR/EIS. While local governments and private entities have made other proposals for other high-speed passenger train services, none have been adopted or approved and none are developed enough, nor is their progress predictable enough, to have been integrated or coordinated with the HST system.

The USEPA commented that "FRA has proposed a separate network using magnetic levitation technology for high speed train service in southern California. ... A full discussion of this issue and potential duplication of efforts and incompatibilities should have been included in the Final PEIS." The Southern California Association of Governments (SCAG) has proposed a regional network of magnetic levitation (maglev) high speed trains in southern California that would be privately financed. The FRA has not proposed, advocated, nor considered advancing such a maglev system. Beginning in 1999, the FRA implemented the maglev transportation technology deployment program provisions of TEA-21 [23 U.S.C. § 322] by soliciting proposals for a maglev project suitable for deployment in the United States. The California Department of Business, Transportation and Housing submitted the SCAG proposal to FRA for consideration; however, the FRA did not select the SCAG project preferring instead projects in Maryland and Pennsylvania. However, Congress continued to provide funds for SCAG's maglev activities.

The proposed maglev network was developed separately by SCAG to address regional transportation and without integrating the maglev network with the HST system. SCAG has proposed to locate the maglev network in many of the same corridors and to offer comparable high speed transportation services as the HST system, however, the maglev network would not connect major metropolitan areas of the state. The similar and extensive level of investment necessary to implement either the HST system or maglev network makes construction of both unlikely in common corridors serving the same travel markets.

The FRA also considered a proposal as part of the maglev transportation technology deployment program from the State of Nevada through the California-Nevada Super Speed Train Commission. As with the California proposal, FRA did not select this project as part of the program, but it continued to receive funding from Congress. On May 20, 2004 the FRA issued a Notice of Intent to prepare a programmatic EIS for the entire Anaheim, California to Las Vegas, Nevada maglev proposal. At this time, only scoping has been completed for this EIS. This proposal would not share any corridors or travel markets with the HST system. Should this project be built, it would likely complement the HST system, connecting at common stations both in Anaheim and Ontario and offering passengers a wider range of destinations. In section 1307 of the Safe, Accountable, Flexible, Efficient Transportation Equity Act - A Legacy For Users (P.L. 109-59), Congress has extended continued financial support for maglev only to the Las Vegas to Prim, Nevada segment of this proposal and one other project in the Eastern half of the country.

11. Compliance with Other Federal Regulations

11.1 Section 4(f) and 6(f) Approvals

Findings under sections 4(f) [49 U.S.C. § 303(c)] and 6(f) [16 U.S.C. § 460l-8] will be prepared as part of project level environmental review when site-specific information about the HST system and location alternatives are known.

11.2 Section 404 of the Clean Water Act

The USEPA and USACE have participated in the development of both the Draft and Final Program EIR/EIS and in accordance with the MOU among Federal agencies for this environmental review, were consulted concerning the selection of the preferred corridor and route most likely to yield the least environmentally damaging practicable alternative (LEDPA) and as identified as preferred in the Final Program EIR/EIS. The USEPA and USACE have concurred that the preferred HST alignment and station options are most likely to contain the LEDPA. Future project-level environmental review will include further consultation with USEPA and USACE regarding the Clean Water Act leading to USACE permit applications.

11.3 Endangered Species Act

Preparation of the Program EIR/EIS involved informal consultation and information sharing with the US Fish and Wildlife Service (USFWS) of the U.S. Department of Interior (DOI). Project-level environmental review would involve consultation with USFWS, as needed, for potential impacts on federally listed plant and wildlife species, including the preparation of a biological assessment or assessments, and biological opinions for each phase of project implementation. Formal consultation under Section 7 of the Endangered Species Act for project study areas of concern would accomplish the following steps identified by DOI: 1) identifying the conservation needs of each listed species with the potential to be impacted by the proposal; 2) identifying the threats to each listed species' conservation related to the proposed action; 3) identifying species conservation or management units and the threats affecting those units; 4) identifying species' conservation goals framed within the context of the HST program; and 5) developing conservation/management unit strategies. The FRA and the Authority would prepare Biological Assessments to address the affected conservation/management units identified.

12. Comments Received on the Final Program EIR/EIS

Some public comments on the Final Program EIR/EIS were received and addressed by the Authority as part of their decisions on the HST system, and are included in Appendix B. Substantive comments made in letters written to the FRA are addressed below (and may also have been addressed separately by the Authority).

12.1 U.S. Environmental Protection Agency

The USEPA submitted comments on the Final Program EIR/EIS for the proposed California HST System focused primarily on the cumulative impacts assessment in the Final Program EIR/EIS and made recommendations for the "Bay Area to Central Valley PEIS", and for "Future Project-level Tier 2 NEPA Analyses".

Cumulative impacts assessment: USEPA commented that the Final Program EIR/EIS did not contain a landscape–level cumulative impact assessment for all sensitive resources, and did not address a comprehensive set of reasonably foreseeable projects. USEPA suggested that a different cumulative impacts analysis may have resulted in different conclusions or different mitigation options, and recommended that future environmental documents consider Caltrans guidance on cumulative impact assessments. *Reasonably foreseeable future actions:* USEPA suggested that additional projects, such as large-scale developments and approved urban planning documents identified within and around the proposed high speed train system, should have been included in the cumulative impacts analysis as reasonably foreseeable future actions.

Past and present actions: USEPA disagreed with the Final Program EIR/EIS's characterization of past actions in the context of cumulative impacts analysis, and asserted that a landscape cumulative impacts analysis should include large scale

mitigation, citing for example USEPA's assumption that a continuously-fenced high speed rail system would impede wildlife movement, and when considered with other past, present, and future project impacts to wildlife movement in California, would be potentially significant to a number of species.

Relationship to other plans: USEPA commented that "FRA has proposed a separate network using magnetic levitation technology for high speed train service in southern California. ... A full discussion of this issue and potential duplication of efforts and incompatibilities should have been included in the Final PEIS." USEPA recommended that FRA clarify the relationship between the need for this project and the need for other magnetic levitation technology proposals by FRA. FRA has addressed this comment in section 10, above, in this record of decision.

Response

USEPA's recommendations for the Bay Area to Merced Program EIR/EIS and for future NEPA/CEQA review will be considered for these activities and efforts to coordinate with USEPA will continue. Future cumulative impacts analysis and identification of mitigation will be based on appropriate study areas identified for individual resources. These study areas will be largely regional and local and they cannot be adequately identified until further information is known about alignment locations and the time period of implementation. Additional cumulative impacts analysis and identification of more refined mitigation will accompany project-level review. The Authority and the FRA find the Final Program EIR/EIS applied appropriate methodology to evaluate cumulative impacts from the proposed HST system at the program level and for decisions to be made on the Program EIR/EIS.

Cumulative impacts assessment: The USEPA letter does not raise new issues about cumulative assessment in the Final EIR/EIS that were not already addressed in response to USEPA's comments on the Draft EIR/EIS (Comment Letter AF008 in the Final EIR/EIS, dated August 31, 2004).

The cumulative impact analysis in the Program EIR/EIS focused on the resources potentially affected by the proposed action and alternatives and identified where there may be added impacts to these resources, when considering past, present, and reasonably foreseeable future actions. The Program EIR/EIS described the current conditions that incorporate past and present effects of other recent projects in analyzing the potential for direct, indirect and cumulative impacts. The cumulative impact analysis considered reasonably foreseeable highway improvements and transit projects within the study area and extensively analyzed the potential for economic growth related cumulative and secondary effects for each of the three system alternatives. In addition, consideration of the indirect effects related to the reasonably foreseeable population and employment growth that could result from the proposed action and alternatives, as identified using local agency general plans and other planning documents, is addressed in the Final EIR/EIS (see Chapter 5, *Economic Growth and Related Impacts),* and is considered part of the cumulative impacts analysis.

The methodology used is appropriate for this Program EIR/EIS due to the future time frame for the proposed HST system and the speculative nature of information about potential projects some 10 to 15 years in the future, and is consistent with CEQ Guidance. CEQ Guidance suggests that where evaluating reasonable foreseeable adverse effects and where there is incomplete information or unavailable information ..."that cannot be obtained because the overall costs of obtaining it are exorbitant or the means to obtain it are not known . . . the agency shall include ... the agency's evaluation of such impacts based upon theoretical approaches or research methods generally accepted in the scientific community." [CEQ Guidance "Considering Cumulative Effects," p. 20; 40 CFR 1502.22]

Past and reasonably foreseeable future actions: USEPA's suggested approach to future projects is not appropriate for this program analysis, and would be speculative for a proposed system that will not be implemented for at least 10 years. Thorough analysis of site-specific, local area, and focused regional cumulative effects, including specific urban development projects, will be undertaken as part of future project-level environmental review, when this information will be available and more relevant to substantive impact analysis.

For the Program EIR/EIS, the costs of attempting to collect detailed, timely, accurate data on projects, which could be considered "reasonably foreseeable" some 10 to 15 years in the future across all the jurisdictions represented by the HST Alternative conceptual corridors and the Modal Alternative components would be exorbitant and the means to obtain it are not assured. Given the limitations of available information, and the need to assess a future timeframe, the use of the growth analysis to address impacts from future development is an appropriate theoretical approach to cumulative impacts for this programmatic analysis.

USEPA's suggestion that local general plans be used to identify reasonably foreseeable projects is not appropriate for this Program EIR/EIS. Every city and county is required by California law to adopt a general plan, but, except for housing elements, general plans are not comprehensively updated on a regular periodic basis pursuant to a statutory schedule. Each city and county determines when to update its general plan. Comprehensive updates are both unpredictable and irregular. Because at the beginning of the Program EIR/EIS process in 2001 the general plans for many of the jurisdictions with potential locations for HST facilities or components of the modal alternative were more than 10 years old, and some were more than fifteen or twenty years old, they were useful for identifying land use patterns and growth projections, but not individual projects. For preparing a cumulative impact analysis for thousands of miles of alternative transportation corridors, the general plans did not provide a reliable and consistent information base for identifying reasonably foreseeable future projects to use in analyzing cumulative impacts in a consistent manner for the system as a whole. The economic growth analysis in Chapter 5 addressed the relevant statewide and regional consequences of future actions that may be influenced by the choice of system alternative, and accounted for anticipated growth according to general plans without listing specific projects. The growth analysis properly considered available information, the timeframe for the implementation of the proposed HST system, the timelag in related projects potentially affecting resources, and the estimated secondary environmental impacts in jurisdictions in which HST facilities could potentially be located. In addition,

appropriate mitigation was identified in Chapter 6B, Station Area Development, that could avoid, minimize, and mitigate potential cumulative and secondary effects.

Cumulative Impact Analysis: USEPA suggests using Caltrans guidance. This may be considered for future project-level documents. The Caltrans documents provide no guidance on cumulative impact analysis in programmatic EIS's or EIRs, and no guidance on the temporal relationship of future projects to the proposed project, other than noting that reasonably foreseeable projects should be considered based on proximity in time and location

Circumstances at locations across the proposed HST system vary widely; therefore identification of statewide or large-scale mitigation for cumulative effects is not appropriate. The Final Program EIR/EIS explains that the proposed HST system would traverse widely varied terrain with different soils, climate, topography, habitat conditions and species. It will be at grade, on aerial structures and in tunnels. It will include features to facilitate wildlife movement. However, because of the varied terrain it will cross, the impacts from the HST system will differ in different locations. Habitat for individual wildlife species is not continuous across the state but exists in distinct ecosystems. Movement requirements differ for individual species and in different locations. For example, there are great differences between the separate and distinct habitat types found in coastal Orange County, Soledad Canyon, Palmdale, and the Central Valley alignments. While coastal sage scrub habitat is a concern in Orange County, in the Central Valley there are different species and habitats of concern (e.g., San Joaquin Kit Fox). Each area has its own mix of habitat types, species, waters, climate and topography, as well as its own array of land uses and human population. The Program EIR/EIS included a broad analysis of the potential for cumulative impact by resource type. The Final Program EIR/EIS also identifies design practices and mitigation strategies for each resource/impact area, based on potential impacts identified in Chapter 3, Environmental Consequences. These mitigation strategies are also appropriate for the general types of impacts anticipated from cumulative effects. Additional analysis of cumulative impacts in local and regional contexts, and more refined mitigation measures, will be addressed during project-level reviews.

12.2 State Parks

The California Department of Parks and Recreation (State Parks) commented on the analysis of three issues in the Final Program EIR/EIS: (1) potential impacts to the five units of the State Park System that lie within 900 feet of the preferred HST north-south alignment, (2) impacts to wildlife corridors and connectivity between State Park System units and other open space or protected lands, and (3) potential impacts of the Bay Area to Central Valley (i.e., Merced) alignment that will be analyzed in a Second Tier Program EIR/EIS. Detailed comments were included on mitigation measures, alternatives, aesthetics, noise, environmental justice, recreation resources, cultural resources, geology and soils, biological resources, and cumulative impacts that substantially restate previously raised concerns, seek additional detailed studies and are critical of the responses provided to earlier State Parks comments on the Draft Program EIR/EIS. Finally, State Parks provided for use in future documents the new names given to the

Taylor Yard and Cornfield park properties, and noted that Orestimba Wilderness had been misspelled in the Final Program EIR/EIS.

Response

Parkland Analysis: The requested additional analysis of the state park system and particularly the five units that are identified as potentially affected by the selected HST corridor alignments, will appropriately be conducted during project-level environmental review. The Program EIR/EIS provides a consistent level of analysis for alternatives within the entire HST system, including thousands of corridor miles, includes design practices and mitigation strategies to avoid and minimize impacts to parks, and identifies steps for subsequent studies. The additional detailed analysis sought by State Parks would have been costly and speculative had it been performed at this time for the Program EIR/EIS. The potential for adverse impacts to parks that may not be fully avoided or reduced by mitigation is acknowledged in the Final Program EIR/EIS.

Level of Detail: In detailed comments State Parks fails to distinguish between the program level of analysis appropriate for the HST proposal due to its large scale and the more detailed, site specific studies that are appropriate for project level EIR/EIS's or other more limited programmatic EIR/EIS's, and fails to recognize that site-specific analysis are not necessary or required for the program decisions to be made based on the Final Program EIR/EIS. Future tiered environmental documents will be sufficiently comprehensive, and are the appropriate studies, to incorporate the additional information provided by State Parks (e.g., data from 2005 preliminary planning documents for the Rio de Los Angeles State Park (formerly known as Taylor Yard)) and to address the concerns raised by State Parks' comments in greater detail. The Preferred HST Alternative avoids impacts to many parks and, where potential impacts remain, the Final Program EIR/EIS incorporates mitigation strategies to avoid, reduce and minimize the potential impacts to parks.

As State Parks' comments recognize, potential impacts to park units may vary widely depending upon the rural or urban location, the resources at each park, the ambient noise environment, and other factors, all of which are appropriate for study in future environmental documents. Additionally, Section 4(f) and 6(f) findings will be made at the project level when alignments have been defined in more detail and after considering further variations to reduce and avoid impacts. Regarding wildlife movement, the Final Program EIR/EIS notes that up to 24% of the preferred HST system would be at-grade in new corridors and could present a barrier to wildlife movement, unless adequate features for wildlife crossings are included and incorporated in the system. The mitigation strategies in the Final Program EIR/EIS include underpasses or overpasses or other appropriate passageways at reasonable intervals to be designed during project level studies in order to avoid, minimize and mitigate potential impacts to wildlife movement. The design and placement details for features to facilitate wildlife movement are appropriately determined in the project level studies when more detailed information is available for alignments, HST facilities, and wildlife resources.

Environmental justice: Environmental justice, which was noted as a concern by State Parks, was addressed for the proposed HST system as a whole in the Program EIR/EIS,

which satisfies all applicable requirements for program level review, and the topic will receive additional study in future tiered environmental documents for the HST system.

EMF: Measurable low-level EMF's occur only in very close proximity to electric power facilities, and would generally be within the HST system right-of-way. Low-level EMF's occur with all electric power facilities and are not unique to the HST system. A variety of studies that have examined the effects of low-level EMF exposures on animals have found that general physiological status is relatively unaffected by low-level EMF exposures. Also, FRA data measuring EMF exposures after the Northeast Corridor Electrification Project found very low exposures levels in proximity to the train system. Further evaluation of potential EMF exposures will occur at the project level when specific species and locations can be examined along with more detailed project design information.

Bay Area to Central Valley: After consultation with CEQ and the California Resources Agency, the Authority and the FRA determined that subsequent tiered environmental documents could address the additional study needed of the proposed HST system connection between the Bay Area and the Central Valley and the identification of a preferred alignment for this portion of the system. This decision represents appropriate recognition of the limits of available data and need for further study, which will include review of connections in the Bay Area and the Central Valley, before additional decisions are made to select a preferred route in this area.

12.3 State Parks Foundation

The California State Parks Foundation (Foundation) commented that: (1) the Final Program EIR/EIS "remains inadequate in its response to potentially significant park impacts and inappropriately defers critical analysis for land management, habitat preservation, cultural and biological resource management and noise and visual impacts to future project-level analysis"; (2) the Foundation disagrees with response ASO051-1, which states that the use of existing rail corridors for HST operations is not expected to greatly alter the environmental effect of these existing rail lines; (3) the Foundation disagrees with response ASO051-3, which states that that it is premature at this level of design to develop more specific mitigation measures for potential effects; (4) the Foundation does not believe that sufficient information has been disclosed that would lead to a thorough assessment of the proposed project, particularly as it relates to potentially significant impacts on state parks; (5) the Authority should establish an official Advisory Committee for Burbank to Los Angeles Union Station similar to that proposed for the Bay Area study.

Response

Adequacy of the Final Program EIR/EIS: Please see responses to the letter from State Parks above on the level of detail of the Final Program EIR/EIS. This comment was also addressed as part of the Final Program EIR/EIS, particularly in the Summary and in Standard Response 3.15.13. Please also see Standard Responses 3.15.2, 3.15.4, 3.14.6 regarding biological resource evaluation.

Conclusions on environmental effect of co-location with existing rail lines: In alignments near parks where existing nearby passenger and freight trains are part of the ambient noise and visual environment, it is important to recognize that while the HST system is different than those services, the added impact may not be great, and the combined HST and conventional rail facility may improve existing local environments. In dense urban areas (such as at Taylor Yards and Old Town San Diego) the urban environment has elevated ambient noise levels, particularly where there are also freeways nearby and/or existing rail lines. When traveling at reduced speeds the HST is quieter than existing freight and conventional passenger trains. Moreover, when the HST shares rights-of-way with conventional rail, grade separation improvements and/or sound walls or other mitigation measures will reduce existing noise levels and other existing environmental impacts in these corridors.

Mitigation measures for potential effects: The need for further study is inherent to the first phase of a tiered environmental process that is followed by further studies and it is entirely proper for further study of discrete issues to be included in future project-level environmental documents, which will be more detailed. The Final Program EIR/EIS contains mitigation strategies appropriately identified at the program level and notes that such strategies will be refined and applied at the project level. Additional steps will be taken at the project-level to avoid impacts to parks by considering alignment variations. The Authority is committed to avoiding Henry Coe State Park, and will continue to apply avoidance and mitigation strategies in future studies regarding other State Parks.

13. Corrections to the Final Program EIR/EIS

A number of corrections to the Final Program EIR/EIS were identified during the NEPA waiting period, the CEQA certification process, and in public and agency comments. These errata are included in this record of decision as Appendix C as well as one additional erratum in Appendix B, section 1.3. These corrections make minor modifications to the EIR/EIS, are not considered significant new information, and do not change the analysis or conclusions of the Program EIR/EIS. These corrections merely clarify and amplify issues adequately addressed in the Final Program EIR/EIS. These corrections do not trigger the need to prepare a supplement, per the requirements of the CEQ's NEPA regulations (40 CFR 1502.9(c)(1)).

14. Conclusion

The need for an HST system is directly related to the expected growth in population and resulting increases in intercity travel demand in California over the next twenty years and beyond. As a result of this growth in travel demand, there will be increases in travel delays from the growing congestion on California's highways and at airports. In addition, there will be effects on the economy and quality of life from deteriorating reliability of the transportation system as travel demand increases and from worsening air quality in and around California's metropolitan areas. The intercity highway system, commercial airports, and conventional passenger rail serving the intercity travel market are currently

operating at or near capacity, and will require very large public investments for maintenance and expansion in order to meet existing demand and future growth.

The proposed HST system would provide a new mode of high-speed intercity travel that would link the major metropolitan areas of the state; interface with international airports, mass transit, and highways; and provide added capacity to meet increases in intercity travel demand in California projected for the year 2020 and beyond in a manner sensitive to and protective of California's unique natural resources. In addition, the HST Alternative is identified as environmentally preferable under NEPA.

The evaluation and findings indicate that the Modal Alternative, improvement to existing highway and air modes of intercity travel, would help meet projected needs for intercity travel in 2020, but would not satisfy the purpose and objectives of the program as well as the HST alternative. In addition, although the capital cost of the Modal Alternative would be over two times the estimated capital cost of the HST Alternative, the Modal Alternative would have considerably less sustainable capacity than the HST Alternative to serve California's intercity travel needs beyond 2020.

The evaluation and findings of the Final Program EIR/EIS also indicate that taking no action under the No Project Alternative would not meet the intercity travel needs projected for the future (2020 and beyond) as population continues to grow, and would fail to meet the purpose and objectives of the program which can be met by the Preferred HST Alternative. The No Project Alternative would result in environmental impacts but would not offer travel improvements compared to the Modal and HST Alternatives.

Based on the factors outlined above and as informed by the analysis presented in the Draft Program EIR/EIS, public and agency comments, and additional analysis described in the Final Program EIR/EIS, the FRA selects the HST alternative and selects for further analysis the preferred alignments and stations.

Joseph H. Boardman
Administrator
Federal Railroad Administration

Date: 11/18/2005

Attachments: Appendix A – Mitigation Monitoring and Reporting Plan

Appendix B – Summary of Public Comments from CEQA Certification

Appendix C – Errata for the Final Program EIR/EIS

APPENDIX **E**

2010 REVISED BAY AREA TO CENTRAL VALLEY CEQA FINDINGS OF FACT & RESOLUTION # HSRA 11-11

Available on the California High-Speed Rail Authority website:
http://www.cahighspeedrail.ca.gov/library.aspx

EXHIBIT A

Bay Area to Central Valley High-Speed Train

CEQA Findings of Fact and Statement of Overriding Considerations

August 2010

CALIFORNIA
High-Speed Rail Authority

TABLE OF CONTENTS

Page

1 INTRODUCTION 1
2 PROJECT DESCRIPTION 2
3 THE ROLE OF TIERING AND THE LEVEL OF DETAIL FOR THIS PROGRAM EIR/EIS 4
4 FINDINGS ON SPECIFIC IMPACTS AND MITIGATION STRATEGIES 6
4.1 Traffic, Circulation, Transit and Parking 7
4.2 Air Quality 13
4.3 Noise and Vibration 15
4.4 Energy 19
4.5 Electromagnetic Fields and Electromagnetic Interference 21
4.6 Land Use Impacts and Station Area Development 23
4.7 Agricultural Lands 28
4.8 Aesthetics and Visual Resources 31
4.9 Public Utilities 37
4.10 Hazardous Materials and Wastes 39
4.11 Cultural and Paleontological Resources 41
4.12 Geology and Soils 46
4.13 Hydrology and Water Quality Impacts 49
4.14 Biological Resources and Wetlands 54
4.15 Public Parks and Recreation Resources 66
4.16 Impacts to Freight Operations 70
5 CUMULATIVE IMPACTS 72
6 GROWTH-INDUCING IMPACTS 76
7 FINDINGS ON RIDERSHIP FORECASTS AND THE NEED FOR FURTHER REVISION AND RECIRCULATION OF THE PROGRAM EIR 81
8 FEASIBILITY OF POTENTIAL ALTERNATIVES 83
9 STATEMENT OF OVERRIDING CONSIDERATIONS 101

TABLES

Page

Table 4-1 Impacts to 2030 Peak-Hour Traffic on Intercity Freeways from Diversion to HST 7
Table 4-2 Traffic Conditions on Monterey Highway With and Without the Project During Evening Peak Period (Year 2035) 8
Table 4-3 Impacts to Station Area Traffic from HST 9
Table 4-4 Stations and Connecting Transit Service 10
Table 4-5 Noise and Vibration Impact Summary for Preferred Alternative Alignments and Station Location Options 16
Table 4-6 Farmland Summary Data Table for Preferred Alternative Alignment Alternatives and Station Location Options 28
Table 4-7 Visual Impacts Summary Data Table for Preferred Alternative Alignment Alternatives and Station Location Options 32
Table 4-8 Utilities Summary Data Table for Preferred Alternative Alignment Alternatives and Station Location Options 38
Table 4-9 Hazardous Materials Summary Data Table for Preferred Alternative Alignment Alternatives and Station Location Options 39
Table 4-10 Cultural Resources Summary Data Table for Preferred Alternative Alignment Alternatives and Station Location Options 41
Table 4-11 Summary of Water Resource Impacts for Preferred Alternative Alignments and Station Location Options 49
Table 4-12 Biological Resource Summary Data Table for Preferred Alternative Alignments and Station Location Options 64
Table 4-13 State, Regional, County, and Local Parks, Recreational Areas, Playgrounds, Fairgrounds, and Wildlife Areas Within 900 Feet of the Preferred Alternative Alignment 66

1 INTRODUCTION

These CEQA Findings of Fact and Statement of Overriding Considerations are intended to fulfill the California High-Speed Rail Authority's (Authority's) responsibilities under the California Environmental Quality Act (CEQA) for its approval of the Pacheco Pass Network Alternative serving San Francisco via San Jose, alignment alternatives, and station location options, as analyzed in the Bay Area to Central Valley High-Speed Train (HST) Revised Final Program EIR.

CEQA provides that no public agency shall approve a project or program as proposed, if it would result in significant environmental effects as identified in an EIR, but must instead adopt and incorporate feasible mitigation to avoid and reduce such effects and adopt appropriate findings. In section 21081 of the Public Resources Code, CEQA provides as follows:

> Pursuant to the policy stated in Sections 21002 and 21002.1, no public agency shall approve or carry out a project for which an environmental impact report has been certified which identifies one or more significant effects on the environment that would occur if the project is approved or carried out unless both of the following occur:
>
> (a) The public agency makes one or more of the following findings with respect to each significant effect:
>
> (1) Changes or alterations have been required in, or incorporated into, the project which mitigate or avoid the significant effects on the environment.
>
> (2) Those changes or alterations are within the responsibility and jurisdiction of another public agency and have been, or can and should be, adopted by that other agency.
>
> (3) Specific economic, legal, social, technological, or other considerations, including considerations for the provision of employment opportunities for highly trained workers, make infeasible the mitigation measures or project alternatives identified in the environmental impact report.
>
> (b) With respect to significant effects which were subject to a finding under paragraph (3) of subdivision (a), the public agency finds that specific overriding economic, legal, social, technological, or other benefits of the project outweigh the significant effects on the environment.

These findings include a description of the Pacheco Pass Network Alternative serving San Francisco via San Jose (Preferred Pacheco Pass Network Alternative) to connect the HST system between the Bay Area and the Central Valley, findings concerning potentially significant environmental impacts and mitigation strategies to address such impacts, a discussion of cumulative and growth-inducing impacts, and a statement of overriding considerations.

2 PROJECT DESCRIPTION

2.1 Background—Approval of Statewide HST System

In November 2005, following a programmatic environmental review process, the Authority and the FRA approved the HST system program for intercity travel in California between the major metropolitan centers of Sacramento and the San Francisco Bay Area in the north, through the Central Valley, to Los Angeles and San Diego in the south. The HST system is about 800 miles long, with electric propulsion and steel-wheel-on-steel-rail trains capable of maximum operating speeds 220 miles per hour (mph) (354 kilometers per hour [kph]) on a mostly dedicated system of fully grade-separated, access-controlled steel tracks and with state-of-the-art safety, signaling, communication, and automated train control systems. As part of the November 2005 decision, the Authority and the FRA selected, for further project-level study and implementation planning, a series of alignments and station locations for the HST system.

For the section of the HST system connecting the Bay Area and the Central Valley, the Authority directed staff to prepare a separate program EIR to identify a preferred alignment within the broad corridor between and including the Altamont Pass and the Pacheco Pass.

2.2 Description of Pacheco Pass Network Alternative Serving San Francisco via San Jose to Connect Bay Area to Central Valley

The Authority and the FRA circulated a Draft Bay Area to Central Valley HST Program EIR/EIS in July 2007 (Program EIR/EIS). The study region for the Program EIR/EIS is generally bounded by (and includes) the Pacheco Pass (State Route 152 [SR 152]) to the south, the Altamont Pass (Interstate 580 [I-580]) to the north, the BNSF corridor to the east, and the Caltrain corridor to the west. The Draft Program EIR/EIS evaluated the potential impacts of proposed alignment alternatives and station location options in the study region and defined general mitigation strategies to address potentially significant adverse impacts. The Authority and the FRA received more than 1,300 comments from July 20, 2007 to October 26, 2007, during the circulation period (either through written letters or oral comments).

In May 2008, the Authority and the FRA circulated a Final Program EIR/EIS with edits to the impacts analysis and responses to comments. The Final Program EIR/EIS identified the Pacheco Pass Network Alternative Serving San Francisco via San Jose as the preferred alternative. The Final Program EIR/EIS also identified preferred alignments and station location options for the preferred network alternative. In June 2008, the Authority and the FRA issued an Addendum/Errata to the Final Program EIR/EIS and made it available to agencies and the public. For purposes of these Findings of Fact and Statement of Overriding Considerations, the 2008 Final Program EIR/EIS includes the Addendum. These Findings of Fact and Statement of Overriding Considerations will refer to the 2008 EIR as "2008 Final Program EIR." The Authority approved the Pacheco Pass Network Alternative in July 2008, as described below:

2.2.1 Pacheco Pass Network Alternative Serving San Francisco VIA San Jose

SAN FRANCISCO TO SAN JOSE

Alignment:

- Caltrain Corridor (Shared Use)

Preferred Station Locations:

- Downtown San Francisco Terminus: Transbay Transit Center
- San Francisco Airport Connector Station: Millbrae (SFO)

- Mid-Peninsula Station: Continue to investigate both Palo Alto and Redwood City as potential sites and work with local agencies and the Caltrain Joint Powers Board (JPB) to determine whether a mid-peninsula station site should be developed.

SAN JOSE TO CENTRAL VALLEY

Alignment:

- Pacheco Pass via Henry Miller Road (UPRR Connection)

Preferred Station Locations:

- Downtown San Jose Terminus: Diridon Station
- Southern Santa Clara County: Gilroy Station (Caltrain)

CENTRAL VALLEY

Alignment:

- UPRR N/S
- At the project level, continue to evaluate BNSF or some combination of UPRR and BNSF, because of uncertainty of negotiating with the UPRR and the BNSF for use of some of their right-of-way and continue investigation of alignments/linkages to a potential maintenance facility at Castle Air Force Base (AFB).

Preferred Station Locations:

- Modesto: Downtown Modesto
- Merced: Downtown Merced
- Reaffirm that no station would be located between Gilroy and Merced.

Maintenance Facilities:

- No maintenance facility would be located at Los Banos. Castle AFB is identified as one of the options for future study for the location of an HST maintenance facility.

SAN FRANCISCO BAY CROSSING

No Bay crossing for the proposed HST system.

Following litigation challenging the adequacy of the 2008 Final Program EIR for compliance with CEQA, the Authority rescinded its approval of the Pacheco Pass Network Alternative serving San Francisco via San Jose and prepared and circulated a Revised Draft Program EIR. The Revised Draft Program EIR identified the Pacheco Pass Network Alternative serving San Francisco via San Jose as the preferred alternative, and this designation continued through the Revised Final Program EIR. The project for which these findings are being considered is therefore the same project as described above, and discussed in more detail in Chapter 7 of the Revised Final Program EIR, volume 1, and shown in Figure 7-1.

3 THE ROLE OF TIERING AND THE LEVEL OF DETAIL FOR THIS PROGRAM EIR/EIS

The Authority and the FRA prepared the 2008 Final Program EIR/EIS as a program environmental document under CEQA and NEPA to allow them to select a preferred network alternative and preferred station location options within the broad corridor between and including the Altamont Pass and the Pacheco Pass to connect the Bay Area and Central Valley. The Authority is continuing this effort with the Revised Final Program EIR. The Revised Final Program EIR builds on, and tiers from, the prior Statewide Program EIR/EIS for the HST system, certified by the Authority in November of 2005. Specifically, the current EIR builds from the Authority's prior decisions, articulated in Authority Resolution No. 05-01, that approved the Statewide HST System Program, defined the HST as a steel wheel/steel rail system with maximum speeds of up to 220 mph (354 kph), and selected corridor alignments and station location options. The current EIR also tiers from the prior Statewide Program EIR/EIS by incorporating the design practices and mitigation strategies identified in that document and approved by the Authority for the HST System Program.

At the same time that the Revised Final Program EIR builds on and tiers from the Statewide Program EIR/EIS, it is itself a first-tier, program EIR/EIS under CEQA and NEPA. The focus of the analysis is the programmatic environmental impacts associated with different network alternatives to connect the Bay Area to the Central Valley for the HST system. The network alternatives and station location options are defined conceptually, and the level of detail for the impacts analysis and the mitigation strategies is commensurately broad and general. (CEQA Guidelines, § 15146; see also *In re Bay-Delta Programmatic Environmental Impact Report Cases* (2008) 43 Cal.4th 1143; *Rio Vista Farm Bureau Center v. County of Solano* (1992) 5 Cal.App.4th 351, 371.)

The use of tiering under CEQA, and the consideration of the Bay Area to Central Valley regional segment in a separate first tier, program EIR allows the Authority to focus on the broad policy choices that are ripe for decision:

1. which proposed network alternative and alignment alternatives should connect the San Francisco Bay Area to the Central Valley for the HST system;
2. which station location options along the selected network alternative should be chosen.

The general analysis in the Revised Final Program EIR provides sufficient information for making these broad policy decisions. The need for a maintenance facility was generally considered and will be further addressed in project-level studies when more detailed engineering information is available concerning facility design and specific alignments. The use of tiering environmental documents for the HST system has important planning advantages. Identifying and analyzing the network alternatives and station location options for the Bay Area to Central Valley study region at an early, conceptual stage provides the Authority with the best opportunity to use its design practices and mitigation strategies to avoid and minimize anticipated environmental impacts. (CEQA Guidelines, §15168, subd. [b]). In addition, the general level of detail allows the Authority to compare the broad environmental consequences associated with each of the network alternatives and select the preferred network before investing in more detailed, and expensive, environmental analysis.

The impacts analysis and mitigation strategies identified in the Revised Final Program EIR will be used in the future as a basis for second tier, detailed environmental documents assessing site-specific impacts of HST alignments and station locations that are ready for implementation in the Bay Area to the Central Valley region. The Authority will use relevant information from the impacts analysis to form the basis of more detailed, site-specific impacts analyses, incorporating the Revised Final Program EIR by reference where appropriate. The general mitigation strategies will be refined and applied in second tier EIRs as

specific mitigation measures to avoid and minimize environmental impacts. The Authority will also consider additional mitigation measures for environmental impacts in project-level EIRs.

4 FINDINGS ON SPECIFIC IMPACTS AND MITIGATION STRATEGIES

The environmental effects of the HST alignments and station locations of the Preferred Pacheco Pass Network Alternative that would be potentially significant or significant in the absence of mitigation strategies are described in Chapters 2-4 of Volume 1 of the Revised Final Program EIR, and Chapter 3 of the 2008 Final Program EIR. These impacts are set forth below, along with mitigation strategies the Authority adopts, that will avoid or substantially lessen those potentially significant or significant impacts. As environmental studies for actual project implementation go forward, these mitigation strategies will be refined into actual mitigation measures. These findings recognize that the strategies are not an exclusive list of mitigation, and that additional mitigation measures may be added at the project level. In addition, as mitigation is developed at the project-level, some mitigation included herein as programmatic mitigation strategies may be found to be the responsibility of other public agencies instead of, or in addition to, the Authority.

Also set forth in these findings are those impacts that the Authority finds cannot with certainty be avoided or reduced to a less-than-significant level even with the adoption of all feasible mitigation strategies proposed in the Revised Final Program EIR. In adopting these findings and mitigation strategies, the Authority also adopts a Statement of Overriding Considerations. The Statement of Overriding Considerations describes the economic, social, and other benefits of the Preferred Pacheco Pass Network Alternative that will render these significant unavoidable environmental impacts acceptable.

The Authority is not required to make findings or adopt mitigation strategies or policies as part of this decision for impacts that are less than significant, or beneficial. For these resource areas, however, the Authority is choosing to include findings to provide context and rationale about the less-than-significant or beneficial impact conclusion at the programmatic level. The areas that are less-than-significant without mitigation or beneficial, but discussed in these findings include:

- highway and traffic capacity
- parking
- reduction in statewide and regional air pollutant emissions
- reduction in greenhouse gas emissions
- reduction of transportation energy consumption
- EMI/EMF

Finally, while the Revised Final Program EIR includes a discussion of certain issues necessary to satisfy the National Environmental Policy Act, these issues do not necessarily represent environmental impacts for which findings are required under CEQA. The Authority has determined that the following areas discussed in the Revised Final Program EIR do not require findings:

- travel considerations
- environmental justice
- property impacts
- mineral resources
- movement of goods
- emergency access

4.1 Traffic, Circulation, Transit and Parking

Impact 1. Traffic, Circulation, and Transit

By providing another mode of intercity travel in the Bay Area to Central Valley, the HST would improve reliability and increase mobility within the area's transportation system. The HST system would result in traffic improvement in areas where grade separation for the HST system would replace an at-grade crossing that was responsible for periodic local traffic delays.

TRIP DIVERSIONS / HIGHWAY CAPACITY IMPROVEMENTS / CONGESTION REDUCTIONS

The HST system would add capacity to the Bay Area and Central Valley's transportation infrastructure resulting in volume to capacity ratio improvements (V/C) and would relieve congestion on intercity highways linking the urban areas to the extent that trips taken by HST passengers would otherwise have used highways. Table 4-1 shows projected reductions in trips by major highway link.

Table 4-1
Impacts to 2030 Peak-Hour Traffic on Intercity Freeways from Diversion to HST

Location	2005	2030 No-Build		2030 HST			
	V/C, (LOS)[1]	V/C, (LOS)[1]	% Change from Existing	Peak-Period Trips Diverted[2]	% Change from No-Build	V/C (LOS)[1]	% Change from No-Build
US 101: San Francisco—SF Airport	0.81 (D)	0.95 (E)	17.2%	(596)	-0.6%	0.92 (E)	-2.7%
US 101: SF Airport — Redwood City	0.97 (E)	1.03 (F)	6.3%	(442)	-0.4%	1.03 (F)	-0.4%
US 101: Redwood City—I-880	0.75 (C)	1.47 (F)	96.5%	542	0.5%	1.48 (F)	0.5%
US 101: I-880—San José	0.73 (C)	0.79 (C)	8.3%	(5,392)	-4.6%	0.75 (C)	-4.6%
US 101: San José—Gilroy[3]	0.87 (D)	0.64 (B)	-26.7%	(4,948)	-4.0%	0.61 (B)	-4.0%
US 101: Gilroy—SR 152	0.72 (C)	1.17 (F)	64.0%	(2,986)	-3.7%	1.13 (F)	-3.7%
SR 152: US 101—I-5 [3]	0.78 (C)	0.51 (A)	-34.9%	(612)	-4.2%	0.49 (A)	-4.2%
SR 152: I-5—SR 99 [3]	0.59 (A)	0.46 (A)	-22.5%	(943)	-5.5%	0.43 (A)	-5.5%
I-80: SF—I-880	0.79 (C)	1.18 (F)	50.6%	(736)	-0.6%	1.18 (F)	-0.6%
I-80: I-880—I-5	0.81 (D)	0.98 (E)	19.9%	(2,545)	-3.7%	0.92 (E)	-5.6%
I-880: I-80—I-580	0.82 (D)	1.16 (F)	41.1%	(1,370)	-2.6%	1.13 (F)	-2.6%
I-880: I-580—Fremont/ Newark	0.95 (E)	1.12 (F)	18.0%	(1,852)	-1.8%	1.10 (F)	-1.8%
I-880: Fremont/Newark—US 101	0.96 (E)	1.58 (F)	65.5%	(325)	-0.3%	1.58 (F)	-0.3%
I-580: I-880 via SR 238—Livermore	0.74 (C)	1.28 (F)	73.8%	(3,938)	-2.5%	1.25 (F)	-2.5%
I-580: Livermore—I-5	0.51 (A)	1.22 (F)	137.8%	(6,325)	-5.4%	1.15 (F)	-5.4%
I-680: I-580—US 101	1.06 (F)	1.34 (F)	25.8%	630	0.5%	1.34 (F)	0.5%
I-5: I-580—SR 140 [3]	0.99 (E)	0.81 (D)	-17.6%	(7,897)	-20.2%	0.65 (B)	-20.2%
SR 99: Ripon—Merced	1.04 (F)	1.36 (F)	30.9%	(1,847)	-2.8%	1.32 (F)	-2.8%

Table 4-1
Impacts to 2030 Peak-Hour Traffic on Intercity Freeways from Diversion to HST

Location	2005	2030 No-Build		2030 HST			
	V/C, (LOS)[1]	V/C, (LOS)[1]	% Change from Existing	Peak-Period Trips Diverted[2]	% Change from No-Build	V/C (LOS)[1]	% Change from No-Build

[1] Peak-hour V/C changes based on diversion to HST. LOS values are defined from V/C values as follows: up to 0.60=A, above 0.60 to 0.70=B, above 0.70 to 0.80=C, above 0.80 to 0.90=D, above 0.90 to 1.00=E, above 1.00=F
[2] The peak period is the sum of the AM and PM 3-hour peak periods. Where the percentage diversion is different than the V/C percentage change, it is because of unequal directional split of diversion.
[3] Future capacity increases result in improved LOS between 2005 and 2030. Source: Caltrans 2005 AADT, Cambridge Systematics (base forecast), Parsons, June 2007.

As shown, 16 of the 18 highway links show improvements with the HST compared with 2030 No Build conditions. The links that degrade in performance do so only slightly. The number of trips diverted to the HST train system on the highway links ranges from 325 on I-880 (from Fremont/Newark to US 101), a 0.03% reduction, to 7,897 on I-5 (from I-580 to SR 140), a 20.2% reduction. Considering the CEQA thresholds of significance in the Revised Final Program EIR, this is identified to be a beneficial impact.

Monterey Highway Traffic Congestion Impacts

The Preferred Pacheco Pass Network Alternative would result in narrowing the Monterey Highway from six lanes to four lanes for approximately 3.3 miles to accommodate HST track. The preliminary information based on the City of San Jose's traffic model, which does not incorporate the diversion of traffic to HST, indicates that levels of service (LOS) on Monterey Highway in the evening peak hour would deteriorate by one level of service for four northbound segments (Southside to Capitol; Senter to Branham; Branham to Chynoweth; Chynoweth to Blossom Hill), as show in Table 4-2.

Table 4-2
Traffic Conditions on Monterey Highway With and Without the Project During Evening Peak Period (Year 2035)

MONTEREY HIGHWAY SEGMENT		Northbound						Southbound					
		6 LANES – BASE CASE			4 LANES – WITH HST PROJECT *			6 LANES – BASE CASE			4 LANES – WITH HST PROJECT *		
From	To	Peak Hr Vol	V/C	LOS	Peak Hr Vol	V/C	LOS	Peak Hr Vol	V/C	LOS	Peak Hr Vol	V/C	LOS
Southside	Capitol	1,791	0.629	B	1,490	0.784	C	2,753	0.966	E	1,880	0.989	E
Capitol	Senter	2,101	0.737	C	1,504	0.792	C	2,894	1.015	F	1,907	1.004	F
Senter	Branham	2,114	0.742	C	1,593	0.839	D	2,790	0.979	E	1,853	0.975	E
Branham	Chynoweth	2,330	0.818	D	1,746	0.919	E	2,727	0.957	E	1,835	0.966	E
Chynoweth	Blossom Hill	2,574	0.903	E	1,947	1.025	F	2,637	0.925	E	1,885	0.992	E
Blossom Hill	Bernal	1,807	0.623	B	2,004	0.691	B	3,252	1.121	F	3,019	1.041	F
Bernal	Metcalf	3,081	1.027	F	3,153	1.051	F	3,148	1.049	F	2,919	0.973	E
Metcalf	Bailey	2,800	0.933	E	2,869	0.956	E	3,071	1.024	F	2,846	0.949	E

Source: San Jose Department of Transportation 2010.
Peak Hr Vol = peak hour volume.
V/C = volume-to-capacity ratio.
*Does not account for trips that would be diverted from auto to high-speed rail

Considering the CEQA thresholds of significance in the Revised Final Program EIR, the reduction in LOS on the northbound section of Monterey Highway is identified to be a potentially significant impact.

Table 4-2 indicates that narrowing lanes on Monterey Highway, when viewed in isolation, would result in diversion of traffic onto other major and more local roadways in the vicinity. The potential for traffic diversion and whether this creates impacts must be examined at the project level, with consideration of the anticipated mode shift from automobile to high-speed rail.

Station Area Traffic Impacts

The HST stations would create adverse impacts in some areas as a result of adding traffic to streets that would already be congested with other traffic under the No Project Alternative in 2030. Notably, capacity of these arterial streets would be the same under either the No Project Alternative or HST, due to expected traffic increases by 2030. Table 4-3 shows the anticipated impacts to station area traffic from HST at the identified station area cordon lines.

Table 4-3
Impacts to Station Area Traffic from HST

HST Stations	Highway / Station Conditions / Impacts (V/C)		
	2005 Conditions	2030 without HST Conditions	2030 HST Impacts HST Preferred Alt.
Transbay Transit Center	0.80; LOS D	0.90; LOS D	1.08; LOS F
Millbrae/SFO	0.63; LOS B	0.91; LOS E	0.96; LOS E
Redwood City (Caltrain)	0.61; LOS B	0.68; LOS B	0.72; LOS C
Palo Alto (Caltrain)	0.85; LOS D	0.47; LOS A	0.50; LOS A
San Jose (Diridon)	0.25; LOS A	0.48; LOS A	0.59; LOS A
Gilroy (Caltrain)	0.44; LOS A	0.67; LOS B	0.74; LOS C
Modesto (Downtown)	0.53; LOS A	0.90; LOS D	0.92; LOS E
Merced (Downtown)	0.95; LOS E	1.15; LOS F	1.16; LOS F

As shown, cordon traffic operations at the following stations may constitute an adverse impact: Transbay Transit Center, Millbrae, Modesto Downtown, and Merced Downtown. In these cases, traffic cordon conditions would deteriorate from LOS D to LOS E or F or from LOS E or F to a worse LOS E or F. Traffic effects at the cordon line at other station location options would not constitute an impact, but individual roadway segments (away from the Cordon Line) would operate at congested conditions under the No Project Alternative and/or with the HST for the San Jose and Gilroy stations. Considering the CEQA thresholds of significance in the Revised Final Program EIR, this would be a significant impact.

Transit/Public Transportation Impacts

HST stations would be multi-modal hubs that would provide for connectivity with other services. Table 4-4 shows current and anticipated transit connections.

Table 4-4
Stations and Connecting Transit Service

Transbay Transit Center	**Muni 5, 6, 10, 14, 14L, 14x, 38, 38L, 76, 108; AC Transit C, CB, E, F, FS, G, H, J, L, LA, N, NL, NX, NX1, NX2, NX3, NX4, O, OX, P, S, SA, SB, U, V, W, Z, 800 SamTrans DX, FX, KX, MX, NX, PX, RX, 391, 292; Golden Gate Transit Service 10, 20, 30, 50, 60, 70, 80, 2, 4, 8, 18, 24, 26, 28, 32, 34, 38, 44, 48, 54, 56, 72, 74, 76, 78, 90, 93; WestCAT; Greyhound; Caltrain; BART**
Millbrae	SamTrans MX, 242, 390, 391, Caltrain, BART
Redwood City	SamTrans KX, PX, RX, 270, 271, 390, 391, Caltrain
Palo Alto	SamTrans KX, PX, RX, 280, 281, 390, 391; SCVTA 22, 35, 88,522, Caltrain
San Jose	SCVTA 22, 63, 64, 65, 68, 180, 305, 522, Hwy. 17, Caltrain, ACE, Amtrak, DASH, LRT, MST 55 (Monterey to San Jose Express)
Gilroy	SCVTA 17, 19, 68, 121, Caltrain, Greyhound, San Benito Transit, MST 55.
Downtown Modesto	StaRT, CAT, Ceres Dial-A-Ride, ROTA, MAX Route 25.
Downtown Merced	Merced County Transit's "The Bus"
Source**:** Muni, SamTrans, Santa Clara Valley Transportation Authority, AC Transit, Golden Gate Transit, Merced County Transit, Caltrain, BART, 2003.	

Except at the downtown San Francisco Transbay Transit Center station location, transit serving the proposed station areas would have enough capacity to meet transit demand, and hence the impact attributable to additional HST traffic would be low or less than significant under the significance criteria. At the San Francisco station, however, transit lines would be operating above capacity during peak hours under the No Project Alternative. The additional HST traffic would deteriorate the conditions further and result in a significant impact.

Although the impact to transit service can be considered less than significant when viewed on a Bay Area to Central Valley region-wide basis, the deterioration in conditions at the San Francisco Transbay Transit Center cause the Authority to find the impact significant.

Construction Traffic Impacts

The construction of the HST system would result in short-term impacts of increased traffic in areas affected by the construction process for the duration of the construction in that area. In a few areas, construction of the HST system would result in closure, either temporary or permanent, of local roadways that in turn would result in increased traffic on nearby roads and longer travel routes for some travelers. The Authority finds that the localized increases in traffic and congestion near HST station areas and during construction are significant at the programmatic level of analysis.

Mitigation Strategies

Program-level mitigation strategies would be further refined and specific measures would be considered during project-level environmental reviews where traffic impacts are found to be significant at the project level. The following mitigation strategies can be refined and applied at the project-specific level to reduce these impacts:

1. Require that HST system stations serve as multi-modal transportation hubs providing easy connection to local/regional bus, rail and transit services, as well as providing bicycle and pedestrian access.
2. Require the HST system to be grade-separated from all roadways to allow vehicular traffic to flow without impediment from the HST system.

3. Work with local and regional agencies to develop and implement transit-oriented development strategies around HST stations, as described in Chapter 6 of the Final Program EIR/EIS.
4. Work with public transportation providers to coordinate services and to increase service and/or add routes, as necessary, to serve the HST station areas.
5. Work with local and regional agencies to identify, plan, coordinate, and implement traffic flow improvements around HST station locations during project-level planning. Such improvements may include:
   - Develop and implement a construction phasing and traffic management plan.
   - Minimize closure of any proximate freight or passenger rail line or highway facility during construction.
   - Widen roadways.
   - Install new traffic signals.
   - Improve capacity of local streets with upgrades in geometrics, such as providing standard roadway lane widths, traffic controls, bicycle lanes, shoulders, and sidewalks.
   - Install modifications at intersections, such as signalization and/or capacity improvements (widening for additional left-turn and/or through lanes).
   - Coordinate and optimize signals (including retiming and rephrasing).
   - Designate one-way street patterns near some station locations.
   - Truck route designations.
   - Implement turn prohibitions.
   - Coordinate with CalTrans regarding nearby highway facilities.
6. Use one-way streets and traffic diversion to alternate routes. Additional regional strategies include:
   - Coordination with regional transportation (highway and transit) planning (e.g., regional transportation plans).
   - congestion management plans.
   - freeway deficiency plans, etc.
   - Intelligent Transportation Systems Strategies (ITS).
7. To address traffic impacts on Monterey Highway, mitigation strategies include:
   - Optimizing signal timings (for the revised traffic volumes and capacity)
   - Synchronizing signals (Coordinating the timing of the signals between successive intersections, and automatically adjusting the traffic signals to facilitate the movement of vehicles through the intersections. This will help in reducing overall stops and delays. This works well if the distance between adjacent signals is a quarter of a mile or less).
   - Selectively adding new turn lanes at intersections. (For example, adding two left-turn lanes instead of an existing single left-turn lane. The traffic analysis will show which intersections would require additional turn lanes. Adding turn lanes would be much more economical/affordable than adding whole lanes.)
   - Promoting more transit usage in the corridor by increasing frequency of popular transit services.

A transportation impact analysis will be conducted at the project-level, which will include a detailed evaluation of traffic, parking, pedestrian, bicycle, transit, construction and cumulative transportation impacts of the proposed HST project. This information will identify: (1) Changes in traffic volumes on regional roadways that result from HST construction and operations (2) Changes in traffic volumes on local streets that result from passengers accessing/leaving HST stations, from project construction, and from other HST related roadway changes, and the effect of these changed volumes on roadway operations and critical intersections. (3) The analysis of number of parking spaces required and the placement of the parking facilities will be evaluated. Potential parking impacts will be evaluated based on the existing and future parking supply and the projected parking demand. Parking demand will be based upon the patronage and mode of access forecasts at each proposed station, including parking and related circulation impacts for adjacent neighborhoods. (4) potential impacts to transit including potential for inadequate capacity of feeder bus service, potential for traffic congestion from project to disrupt or delay bus service that serve or run near stations or other transit operations. Potential impacts of project construction on transit service will also be evaluated in detail. (5) The project-level traffic impact analysis study will also evaluate the effect of the project and project construction on existing and planned pedestrian and bicycle facilities. Potential impacts on pedestrian and bicycle connections to and across HST facilities will be analyzed. Detailed information and analysis of potential traffic impacts including impacts to pedestrian and bike facilities and feasible mitigation measures will be included in project-level EIR/EIS. (6) Cumulative potential traffic impacts due to the proposed project. Detailed information and analysis of impacts and feasible mitigation measures will be included in project-level EIS/EIR/.

The Authority finds that these mitigation strategies will reduce impacts to transit services and traffic impacts associated with construction to a less than significant level. The Authority further finds that these mitigation strategies are expected to avoid or substantially lessen traffic impacts around station areas to a less-than-significant level in most circumstances and that impacts on Monterey Highway will be minimized. Planning multi-modal stations, coordinating with transit services, providing accessible locations and street improvements, and encouraging transit-oriented development in station areas would help to ease traffic constraints in station areas. Sufficient information is not available at this programmatic level, however, to conclude with certainty that the above mitigation strategies would reduce impacts around stations or on Monterey Highway to a less-than-significant level in all circumstances. The Authority therefore finds that traffic impacts around station areas and traffic impacts on Monterey Highway may be significant, even with the application of mitigation strategies. Additional environmental assessment will allow a more precise evaluation in the second-tier, project-level environmental analyses. The co-lead agencies will work closely with local government agencies at the project level to implement mitigation strategies.

The Authority further finds that a more detailed evaluation of traffic impacts that may be caused by the Preferred Pacheco Pass Network Alternative, and specifically the potential for diversion of automobile traffic onto local roadways due to narrowing of Monterey Highway, can only be examined at the project-level when the appropriate modeling tools can be applied to provide a more detailed forecast of traffic levels in light of both HST diversion and future local traffic conditions.

Impact 2. Parking

The EIR analysis of traffic included consideration of parking near the locations of proposed HST stations. HST stations were described as including parking at a level consistent with local plans and policies and adequate for the increment of parking demand attributable to HST service at a multi-modal hub, also taking into account conditions at specific locations during project-level studies. Coordination and integration of the HST system with public transportation services will reduce demand for parking, and result in shared parking in some areas for public transportation services.

With the additional traffic accessing the HST stations, it is anticipated that parking will be added at the stations that is sufficient to meet demand, and the impacts on parking at all stations would remain at V/C

less than 1, except in downtown San Francisco, where private parking operators are expected to provide sufficient parking at market rates.

Considering the CEQA thresholds of significance in the Revised Final Program EIR, this is identified to be a less-than-significant impact when viewed on a Bay Area to Central Valley region-wide basis.

Mitigation Strategies

To assure parking impacts will be avoided, the Authority will develop and coordinate implementation at the project level of parking improvement strategies considering local policies, including share parking, off-site parking with shuttles, and parking and curbside use restrictions parking permit plans for neighborhoods near HST stations. During project-level studies, environmental analyses will provide more detailed review of parking demand and parking to be included with proposed HST stations, plus identify coordination needed with local/regional public transportation providers, and provide further consideration of the following mitigation strategies:

1. Consider offsite parking with shuttles.
2. Share parking strategies.
3. Implement parking permit plans for neighborhoods.
4. Employ parking and curbside use restrictions.

The Authority finds that these mitigation measures will ensure that parking impacts remain less-than-significant.

4.2 Air Quality

The Revised Final Program EIR analyzed the potential statewide, regional, and localized impacts on air quality of implementing the Preferred Pacheco Pass Network Alternative by examining highway vehicles miles traveled (VMT), number of plane operations, number of train movements, and power requirements for the proposed HST system statewide. Local impacts were examined based on level of service information and volume to capacity ratios for intercity freeway segments.

Impact 1. Reduction in Statewide and Regional Air Pollutant Emissions

The HST system would result in air quality improvement across the state and in the Bay Area to Central Valley study region. The Preferred Pacheco Pass Network Alternative could result in a daily reduction in VMT of about 9.74 million as compared to the No Project Alternative in 2030. This VMT reduction is expected to result in on-road mobile source emissions reductions statewide, and within the air basins that are part of the Bay Area to Central Valley study region. The emissions reductions are depicted in the 2008 Final Program EIR at Table 3.3-4. The HST system statewide is expected to reduce the emissions burdens associated with air travel by shifting flights to HST trips. The emission reductions are depicted in the Final Program EIR/EIS Table 3.3-5. The demand for additional electric power may result in increased emissions of criteria pollutants by 1.2%, as shown in Table 3.3-6 of the 2008 Final Program EIR. Viewing all of these changes collectively, the 2008 Final Program EIR concluded that the HST system statewide and in the Bay Area to Central Valley study region would result in a decrease in criteria pollutant emissions, as shown in Table 3.3-7 of the 2008 Final Program EIR. Additional air quality improvement would result from congestion relief afforded by the use of HST to the extent that: (1) congested highway traffic would be relieved on intercity highway segments, (2) grade separations for the HST system improve local traffic flow by removing traffic impediments that cause congestion and delays, and (3) public transportation use increases.

The Authority finds that the HST system and the Preferred Pacheco Pass Network Alternative will have a beneficial impact on statewide and regional air quality by reducing pollutant emissions.

Impact 2. Localized Air Quality Impacts due to Congestion/Traffic near HST Stations

The Preferred Pacheco Pass Network Alternative would create an increase in traffic and congestion around HST stations, generating a localized increase in mobile-source air pollution that could potentially exceed air quality standards. Due to the uncertainty inherent in a program level of analysis, it is not possible to know the exact location, extent, and characteristics of increased traffic and congestion that will be generated around various HST station sites. Considering the thresholds of significance in the Revised Final Program EIR, and the programmatic level of analysis, this localized impact is considered potentially significant.

Mitigation Strategies

The Authority finds that the following mitigation strategies can be refined and applied at the project level to reduce this impact:

1. Assure that HST stations are multi-modal hubs and include appropriate parking, including increased parking for carpools, bicycles, and other alternative transportation methods (see the mitigation strategies for Traffic and Circulation, Impact 1).
2. Increase use of public transit by coordinating with local and regional public transportation providers to increase opportunities for connection between the HST system and other public transportation services.
3. Increase use of alternative-fueled vehicles.
4. Work with local and regional agencies to implement local street and roadway improvements, including various traffic flow improvements and congestion management techniques, and parking management strategies to reduce localized pollution from traffic related to the HST system (see the mitigation strategies for Traffic and Circulation, Impact 1)

The Authority finds the mitigations strategies listed above will reduce this impact to a less-than-significant level.

Impact 3. Short-term Air Quality Impacts due to Construction

Construction impacts associated with the Preferred Pacheco Pass Network Alternative include emissions from various activities, such as the use of diesel equipment, soil disturbance, and congestion-related traffic and route changes, all of which are expected to generate temporary short-term localized increases in air pollution. This impact is considered significant at the program level.

Mitigation Strategies

The Authority finds that the following mitigation strategies can be refined and applied at the project-level to reduce this impact:

1. Water all active construction areas at least twice daily.
2. Require that all trucks hauling soil, sand, and other loose materials be covered or maintain at least two feet of freeboard.
3. Pave, apply water three times daily, or apply non-toxic soil stabilizers on all unpaved access roads, parking areas and staging areas at active construction sites.
4. Sweep daily (with water sweepers) all paved access roads, parking areas and staging areas at active construction sites.
5. Sweep nearby streets daily (with water sweepers) if visible soil materials from HST system construction are carried onto adjacent public streets.

6. Hydroseed or apply non-toxic soil stabilizers to inactive construction areas (previously graded areas inactive for ten days or more).
7. Enclose, cover, water twice daily or apply non-toxic soil binders to exposed stockpiles of dirt, sand, etc.
8. Limit traffic speeds on unpaved roads to 15 mph
9. Install sand bags or other erosion control measures to prevent silt runoff to public roads.
10. Replant vegetation in disturbed areas as quickly as possible.
11. Use alternative fuels for construction equipment when feasible.
12. Minimize equipment idling time.
13. Maintain properly tuned equipment.

The Authority finds that the above mitigation strategies will reduce this impact to a less-than-significant level.

Impact 4. GHG Emissions and Global Climate Change

The HST system as a whole, and the Preferred Pacheco Pass Network Alternative in the Bay Area to Central Valley study region, would result in beneficial impacts related to greenhouse gas emissions and global climate change. While some increased carbon dioxide may enter the atmosphere due to construction and operation of the HST system statewide, or due to removal of carbon sequestering plants via agricultural land conversion, any increases are offset by the reduction of carbon dioxide emissions due to reduced automobile vehicle miles traveled and reduced airplane travel. The HST system is not only consistent with, but a critical tool for achieving, the mandate to reduce carbon dioxide emissions statewide under AB 32. The Authority therefore finds that the Preferred Pacheco Pass Network Alternative, as a component of the statewide HST system, will have a beneficial impact on greenhouse gas emissions and global climate change and no mitigation is required.

4.3 Noise and Vibration

For purposes of assessing the Bay Area to Central Valley HST noise and vibration impacts, a GIS analysis was completed for potential impacts on sensitive receptors or receivers, such as people in residential areas, schools, and hospitals. Noise and vibration impacts were evaluated for a 2,000 foot study area along the HST alignments, 1,000 feet from each side of the HST centerline. The relative level of potential noise and vibration impact for each HST alternative is shown in Table 4-5. The table includes the length of alignment alternatives, residential population, mixed use population, acreage of parkland, number of schools, and number of hospitals. The noise and vibration impact ratings are based on the population densities along each alignment and the proximity of parkland, hospitals, and schools where noise and vibration impacts might occur. Segments where trains would operate at higher speeds, over 150 mph, would have a greater level of impact.

Table 4-5
Noise and Vibration Impact Summary for Preferred Alternative Alignments and Station Location Options

Corridor	Preferred Alignment	Total Segment (Miles)	Residential Population	Mixed Use Population	Parkland (Acres)	Hospitals	Schools	Noise Impact Rating*	Vibration Impact Rating
San Francisco to San Jose: Caltrain	San Francisco to Dumbarton	28.8	5,509	140	-	-	2	Medium	Medium
	Dumbarton to San Jose	21.6	9,456	62	5.3	-	-	Medium	High
San Jose to Central Valley: Pacheco Pass	Pacheco	70.6	8,029	48	736	-	4	Medium	Medium
	Henry Miller (UPRR Connection)	62.6	1	1	1,437	-	1	Low	Low
Central Valley	UPRR N/S	87.3	7,401	649	205	2	2	Medium	Low
Station Location Options									
Transbay Transit Center								Low	Low
Millbrae/SFO								Medium	Medium
Redwood City (Caltrain)								Medium	Medium
Palo Alto (Caltrain)								Medium	High
San Jose (Diridon)								Medium	Medium
Gilroy (Caltrain)								Medium	Medium
Modesto (Downtown)								Medium	Low
Merced (Downtown)								Medium	Low
Note: *Accounts for Grade Crossing Elimination on alignment segments on or adjacent to existing non-grade separated tracks.									

Impact 1. Increased Noise from Train Operations and Construction

The HST could create long-term noise impacts along the alignment segments from train operations by creating intermittent increased noise. As a new noise source the HST system would be far quieter than typical passenger and freight trains. Within the study area, the HST system could result in noise impacts on approximately 31,295 people, 2,385 acres of parkland, 2 hospitals, and 9 schools, The HST system could also result in noise impacts on sensitive wildlife species, particularly those nesting or breeding nearby.

Construction of the HST could also cause short-term construction-related noise impacts. Noise impacts from construction of the project would be generated by heavy equipment used during major construction periods as close as 50 feet from existing structures along the HST alignment and around stations.

Alignment

Operation of the HST system adjacent to the Caltrain corridor along the San Francisco Peninsula would pass through densely populated communities where there is high potential for noise impacts. The noise study area also includes schools and parkland that would be sensitive to noise. The potential noise impacts would result primarily from the greater frequency of trains, since the HST service would be operating at reduced speeds and would create noise levels similar to the existing

services. The HST system would be expected to result in the elimination of up to 48 grade crossings on the peninsula. Grade separation of existing rail services would result in considerable benefits from the elimination of the warning bells at existing at-grade crossings and the horn blowing of the existing commuter/intercity services currently in operation. Because the HST system would be traveling at reduced speeds and the communities would benefit from grade separation improvements, it was rated as having a medium level of potential noise impacts.

The San Jose to Gilroy portion of the San Jose to Central Valley alignment is rated as having medium potential for noise impacts. Although the HST system could reach speeds as great as 186 mph along the Caltrain/UPRR Corridor between San Jose and Gilroy, the densities are less than on the San Francisco Peninsula, and the communities would receive considerable benefit from the elimination of up to 24 grade crossings. Four schools, parkland, and varying residential populations are located along this portion of the alignment. The alignment through the Diablo Range and along Henry Miller Road would be within an area that is sparsely populated, but the HST would introduce new noise sources to adjacent open space and ecologically sensitive areas where the alignment is at grade or elevated. While the Henry Miller portion of the alignment was rated as low for potential noise impacts, primarily due to low populations, this alignment would likely have potentially high noise impacts on wildlife and would be further evaluated at the project-level environmental review once biological field surveys are conducted and the types, location, density, and sensitivity of wildlife is determined.

Along the UPRR alignment through the Central Valley, the HST system would be operating at maximum speeds throughout most of the Central Valley. This alignment was rated as having a medium potential for noise impacts due generally to the sparseness of residential land use and the extent of open space along most of its length. However, there are a number of locations in the Central Valley where the HST system would pass through populated areas and have high potential noise impact ratings for short segments. Examples include portions of Modesto and Merced that could be exposed to higher noise levels from HST operations. In several populated areas, the HST would be on aerial structure, primarily to reduce potential conflicts with freight railroad spur tracks or freight railroad yards. The vertical elevation of the aerial structure would allow potential noise impacts to extend further than they would at grade.

Stations

Because the HST stations are located in already developed urban areas, the ambient noise conditions are already high. The proposed Transbay Transit Center station would be underground and noise impacts on surrounding sensitive receptors would not occur. All of the other stations were rated as having a medium potential for noise impacts. In addition, increased vehicular traffic around stations may result in an increase in noise levels.

Considering the CEQA thresholds of significance in the Revised Final Program EIR, including the FRA's noise impact criteria, this impact is considered significant when viewed on a region-wide basis. The significant noise impact from operations will not occur along the entire HST system alignment. Rather, the impact would be localized, because certain areas along the proposed HST system alignment have no sensitive receptors, and because trains speeds are slower in some places leading to lower noise impact ratings.

Mitigation Strategies

The Authority finds that the following mitigation strategies can be refined and applied at the project-specific level to reduce this impact:

1. Continue to utilize design practices to identify grade separations to eliminate grade crossing related noise.

2. Noise barriers, such as sound walls, trenches or earth berms, where there are severe noise impacts.
3. Require noise reduction in HST equipment design and track structures design.
4. Where not already included, consider placing alignment sections in tunnel or trenches or behind berms where possible and where other measures are not available to reduce significant noise impacts.
5. Use of enclosures or walls to surround noisy construction equipment, and installation of mufflers on engines; substitution of quieter equipment or construction methods, minimizing time of operation and locate equipment farther from sensitive receptors.
6. Suspend construction between 7:00 pm and 7:00 am and/or on weekends or holidays in residential areas where there are severe noise impacts.
7. In managing construction noise take into account local sound control and noise level rules, regulations and ordinances.
8. Ensure that each internal combustion engine would be equipped with a muffler of a type recommended by the manufacturer.
9. Specify the use of the quietest available construction equipment where appropriate and feasible
10. Turn off construction equipment during prolonged periods of non-use.
11. Require contractors to maintain all equipment and to train their equipment operators.
12. Locate noisy stationary equipment away from noise sensitive receptors.

The Authority finds that the foregoing mitigation strategies will reduce this impact to a less-than-significant level.

Impact 2. Exposure to Ground-borne Vibration

Ground-borne vibration from trains is the fluctuating motion experienced by people on the ground and in buildings near railroad tracks. Vibration can create impacts to adjacent buildings, and therefore adjacent buildings were considered as receptors for the EIR's analysis. The HST system could cause an increase in ground-borne vibrations when the HST passes by an area. The ground-borne vibration impact would not occur along the entire length of the HST system alignment. Construction activities can also cause some short-term ground-borne vibration.

<u>Alignment</u>

Operation of the HST system starting at the Transbay Transit Center would result in a low potential for vibration impacts primarily because a portion of the alignment is underground. The other portions of this alignment would have the potential for medium to high vibration impacts because of the proximity of residential structures to the alignment.

The San Jose to Gilroy portion of the San Jose to Central Valley alignment is rated as having medium potential for vibration impacts. Similar to noise, schools, parkland, and residential populations are located along this portion of the alignment and may be affected. The alignment through the Diablo Range and along Henry Miller Road would be within an area that is sparsely populated and would have a low potential for vibration impacts.

Along the UPRR alignment through the Central Valley, the HST system would have a low potential for vibration impacts.

Stations

Because the Transbay Transit Center station would be underground the potential for vibration impacts would be low. Modesto (Downtown) and Merced (Downtown) are also rated low for vibration impacts. Millbrae/SFO, Redwood City (Caltrain), San Jose (Diridon) stations are rated as having medium potential for vibration impacts. Only the Palo (Caltrain) station was rated high for vibration impacts.

Considering the CEQA thresholds of significance in the Revised Final Program EIR, this impact on some adjacent buildings is considered significant when viewed on a region-wide basis.

Mitigation Strategies

The Authority finds that the following mitigation strategies can be refined and applied at the project-specific level to reduce this impact:

1. Specify the use of train and track technologies that minimize ground vibration such as state of the art suspensions, resilient track pads, tie pads, ballast mats or floating slabs.
2. Phase construction activity, use low impact construction techniques and avoid use of vibrating construction equipment where possible to avoid vibration construction impacts.

The Authority finds that vibration mitigation is less predictable at a program level of analysis because of the site-specific nature of vibration transmission through soil along the alignment. Although the mitigation measures will reduce vibration impact levels, at the programmatic level it is uncertain whether the reduced vibration levels will be below a significant impact. The type of vibration mitigation and expected effectiveness to reduce the vibration impacts of the HST Alignment Alternatives to a less-than-significant level will be determined as part of the second-tier project-level environmental analyses. Therefore, the Authority finds that vibration impacts may be significant, even with application of the foregoing mitigation strategies.

4.4 Energy

In the Statewide Program EIR/EIS, the Authority assessed the energy needs for the construction and operation of the HST system as a whole. For this Bay Area to Central Valley Revised Final Program EIS, the analysis again assesses a representative HST alternative for the nearly 800 mile system, updated with new travel demand forecasts prepared by Cambridge Systematics. The statewide study area for the analysis was necessary to determine potential energy impacts because most of the State's electricity generation and transmission infrastructure contributes to the statewide energy grid. The analysis cannot apportion particular power demands from implementing the HST in the Bay Area to Central Valley study region to particular regional generation facilities.

Impact 1. Increased Long-term Electric Power Consumption for Operation of HST System

The HST system would increase transportation energy use in California compared to existing conditions. Specifically, the HST system would result in an increase in demand on the statewide electricity supply that could reach 794 MW during peak electricity demand periods in 2030. Although it is difficult to predict how this additional load will affect the statewide electricity generation and transmission system, the additional load would represent 0.96% of the 2016 statewide electricity demand predicted by the California Energy Commission for 2016, and extrapolated to 2030. The HST system would be constructed in stages, however, so the additional demand would not occur abruptly. In addition, the statewide electricity grid is expected to expand now and through 2030 to anticipate and respond to new demands, including that of the HST system, so the new HST system demand could be an even smaller percentage of statewide demand in the future.

At the same time that the HST would increase transportation energy use compared to existing conditions, it would result in decreased VMT and decreased energy consumption for transportation purposes compared to the No Project Alternative at 2030. Forecast energy use would decline by the equivalent of about 5.8 million barrels of oil annually when comparing the HST and No Project alternatives at 2030, or a 1.5% savings. Additional energy savings could be larger than this to the extent that the HST system relieves congestion on intercity highway links, since congestion contributes to increases in fuel consumed per mile by vehicles on the highway. The HST system would also result in decreased overall energy consumption per passenger mile traveled. The HST system would require just 975 Btus for each passenger mile traveled, whereas cars and trucks would require 2,320 Btus and airplanes 3,230 Btus.

At a regional level, it is possible that the HST system could contribute to electricity transmission deficiencies, known as bottlenecks. If bottlenecks were to occur, a potentially significant impact could result. Proper planning and design of the power distribution facilities for the HST system in relation to the overall state electrical grid would avoid such impacts.

Considering the CEQA thresholds of significance in the Revised Final Program EIR, the potential for long-term operational energy impacts from implementing the HST system is considered significant, particularly due to the uncertainty of future projections of energy demand and generation capacity to 2030.

Mitigation Strategies

The Authority finds that the following mitigation strategies can be refined and applied at the Project level to reduce this impact:

1. HST stations will be multi-modal hubs providing linkage for various transportation modes, which will contribute to increased efficiency of energy use for intercity trips and by commuters, and the stations will be required to be constructed to meet Title 24 California Code of Regulations energy efficiency standards.
2. Design practices will require that the electrically powered HST technology be energy efficient, include regenerative braking to reduce energy consumption, and minimize grade changes in steep terrain to reduce energy consumption.
3. Design practices will require that localized impacts be avoided through planning and design of the power distribution system for the HST system.

The Authority finds that the above mitigation strategies will reduce this impact to a less-than-significant level.

Impact 2. Increased Short-term Energy Use During Construction of the HST System

Construction of the HST system would result in one-time non-recoverable energy consumption cost, which would occur during construction of on-the-ground, underground, and aerial facilities. Although details regarding energy conservation practices and construction/staging methods have not been specified for the HST system, which has not yet been designed in detail, it is anticipated that the construction energy demand from building the HST system would be substantial.

Considering the CEQA thresholds of significance in the Revised Final Program EIR, the potential for shorter-term construction-related energy impacts from building the HST system is considered significant, particularly due to the uncertainty of future projections of energy demand and generation capacity to 2030.

Mitigation Strategies

The Authority finds that the following mitigation strategies can be refined and applied at the project-level to reduce this impact:

1. Develop and implement a construction energy conservation plan.
2. Use energy efficient construction equipment and vehicles.
3. Locate construction material production facilities on-site or in proximity to project construction sites.
4. Develop and implement a program encouraging construction workers to carpool or use public transportation for travel to and from construction sites.
5. Develop potential measures to reduce energy consumption during operation and maintenance activities.

The Authority finds that the above mitigation strategies will reduce this impact to a less-than-significant level.

4.5 Electromagnetic Fields and Electromagnetic Interference

In the Statewide Program EIR/EIS, the Authority assessed electromagnetic fields (EMFs) and electromagnetic interference (EMI) for the HST system as a whole by conducting a search of existing literature and expert opinion based on that literature. This assessment considered the diverse geography, communities, and land uses that would be traversed by the HST system, including the Bay Area to Central Valley study region. The Statewide Program EIR/EIS concluded there were no differences among the statewide alignment alternatives considered in that document, and that EMF/EMI impacts would be less than significant. For purposes of the Bay Area to Central Valley Program EIR/EIS, the prior programmatic analysis was updated with new studies and literature on EMF/EMI. The analysis concludes that within the Bay Area to Central Valley study region, there are no measurable differences among alignment alternatives at this program level of detail for EMF/EMI exposure and that these impacts are less than significant.

Impact 1. Exposure of HST system workers, passengers, and nearby residents, schools and other facilities to EMFs

EMFs occur naturally and as a result of human activity such as the generation, transmission, and use of electric power. The EMFs result from the flow of current through wires or electrical devices, and the strength of the magnetic fields depends on equipment design and level of current. Depending on the configuration of the source, the strength of an EMF decreases in proportion to distance or distance squared, or even more rapidly. EMFs are measured in terms of their frequency. Because of their rapid decrease in strength with distance, EMFs in excess of background levels are likely to be experienced only relatively near sources of EMFs.

The health effects of long-term exposure to extremely low frequency magnetic fields remain unresolved. There is no scientific consensus that there are adverse effects associated with human exposure to low-level EMF. Numerous studies have addressed but failed to establish any significant adverse health effects. A California Department of Health Services 2002 study found no evidence to substantiate a relationship between extremely low frequency magnetic fields and cancer or other diseases.

Neither the federal government nor the State of California has established regulatory limits for EMF exposure, and there are no established standards or levels of exposure that are known to be either safe or harmful. Various industry, government and scientific organizations with expertise in electromagnetic fields technology have produced a range of voluntary standards that represent their best judgment of

what levels are considered safe. These include the American Conference of Industrial Hygienists (ACGIH) for occupational exposure and the Institute of Electrical and Electronics Engineers (IEEE) for occupational and public exposure (IEEE C95.1 and C95.6).

The HST catenary and distribution systems will operate primarily at 60-Hz fields, which are considered an extremely low frequency (ELF). The operation of the HST system could result therefore result in people being exposed to additional levels of ELF EMFs. The level of exposure will depend on a number of factors that will vary depending on the track alignment and operations, including design of power supply systems and vehicles, details to be determined at the project-level of design. The ELF EMF that is expected to result from the operation of the HST system is predicted to be substantially below the voluntary standards of the ACGIH or the IEEE. This conclusion is bolstered by a 2006 FRA study of EMF/EMI exposure caused by conversion of a section of Amtrak's Northeast Corridor to electric traction, which determined that EMF exposure in that case was far below the voluntary ACGIH and IEEE standards designed to protect workers and the public.

Considering the CEQA thresholds of significance in the Revised Final Program EIR, the potential for increased levels of ELF EMF exposure from implementing the HST system in the Bay Area to Central Valley study region is considered less than significant.

Mitigation Strategies

Although exposure to ELF EMF is considered less than significant, the Authority reaffirms its commitment to use the following design practices and mitigation strategies at the project-specific level to avoid ELF EMF exposure or reduce it to a practical minimum:

1. Use standard design practices for overhead catenary power supply systems and vehicles, including appropriate materials, location and spacing of facilities and power supply systems to minimize exposure to receptors over distance, and shielding with vegetation and other screening materials.
2. Design overhead catenary system, substations, and transmission lines to reduce the electromagnetic fields to a practical minimum.

The Authority finds that the above design practices/mitigation strategies are to be included in the HST system and that they will ensure that exposure of persons to ELF EMF will be a less than significant impact.

Impact 2. Electromagnetic Interference with Electronic and Electrical Devices

Electromagnetic interference (EMI) occurs when radiofrequency (RF) fields or EMFs produced by a source adversely affect the operation of an electrical, a magnetic, or an electromagnetic device. The HST system could cause EMI in two ways. First, the HST system would generate RF fields at the right-of-way by intermittent contact (unintentional arcing) between the pantograph power pickup and catenary wire. The HST system would also use wireless communications that generate RF fields. Second, the HST catenary and distribution systems would also be source of ELF EMFs. There is a possibility that ELF EMFs could interfere with implanted biomedical devices used by HST maintenance workers, but with current data and designs it is unlikely that EMF inside an HST vehicle would cause EMI.

Considering the CEQA thresholds of significance in the Revised Final Program EIR, the potential for electromagnetic interference with electronic and electrical devices from implementing the HST system in the Bay Area to Central Valley study region is considered less than significant.

Mitigation Strategies

Although the potential for EMI is considered less than significant, the Authority reaffirms its commitment to use the following design practices and mitigation strategies at the project-specific level to avoid EMI or reduce it to a practical minimum:

1. Design the overhead catenary system, substations, and transmission lines to reduce electromagnetic interference to a practical minimum.
2. Design the project component to minimize arcing and radiation of radiofrequency energy.
3. Choose devices generating radiofrequency with a high degree of electromagnetic compatibility.
4. Where appropriate, add electronic filters to attenuate radiofrequency interference.
5. Relocate receiving antennas and use antenna models with greater directional gain where appropriate, particularly for sensitive receptors near the HST system.
6. Comply with the FCC regulations for intentional radiators, such as the proposed HST wireless systems.
7. Establish safety criteria and procedures and personnel practices to avoid exposing employees with implantable medical devices to EMF levels that may cause interference with such implanted biomedical devices.

The Authority finds that the above design practices/mitigation strategies are to be included in the HST system and that they will ensure that potential exposure of persons to EMI will be a less than significant impact.

4.6 Land Use Impacts and Station Area Development

The Final Program EIR/EIS evaluated the potential for the construction and operation of the HST system to cause land use compatibility impacts. The discussion encompasses typical impacts on the natural environment, as well as social and economic considerations related to property impacts and environmental justice. The conclusions below regarding land use compatibility impacts are informed by these economic and social considerations.

Impact 1. Long-Term Land Use Compatibility Impacts with HST Operations

The Revised Final Program EIR examined the impact of placing a new HST system next to existing and planned land uses using GIS databases, along with local and regional planning documents. This includes the impacts of laying new track and installing electric power distribution facilities for the HST system and of providing multi-modal transit stations as part of the HST system. Maintenance, storage and cleaning facilities will be part of the HST system, and general potential locations for these facilities were identified to consider representative impacts of such facilities in the program analysis. Locations for these facilities will be determined in conjunction with future project-level studies and decisions on implementation phasing. There are no maintenance and storage facilities considered in the Los Banos area, or in the vicinity of the GEA, as part of the Revised Final Program EIR. The Merced (Castle AFB) site has been identified for further study, among other sites, for a location of a maintenance facility.

Efforts have been made to incorporate alignments and station locations that are compatible with existing local land use plans and ordinances to the extent feasible, and two thirds of the Preferred Alternative alignment is in or along existing transportation corridors (existing railroad or highway rights of way) or in tunnel. Moreover, proposed station locations are proposed as multi-modal transit hubs. Each of these serve to reduce the extent of land acquisition needed for the proposed HST system.

In the Revised Final Program EIR, land use compatibility of the HST system with adjacent uses was ranked low, medium or high, with compatibility being inversely related to the sensitivity of the land use to the HST system (e.g., business, commercial and industrial areas would have high compatibility, while single family residential areas and habitat preservation areas would have low compatibility with the HST system). The HST system would be compatible with policies to support multi-modal transportation and use of public transportation, and the Authority will work closely with local and regional agencies to implement the system.

A potential impact on a community or neighborhood was identified if the alignment would create a new physical barrier, isolating one part of an established community from another and potentially resulting in a physical disruption to community cohesion. Improvements to existing transportation corridors, including grade separations, would not generally result in new barriers. In many areas, (e.g., the Caltrain Corridor, UPRR), the HST system would improve an existing transportation corridor with grade separations and thus improve local access and traffic patterns, and not serve as a community divider or barrier. In a few areas, however, installation of the HST system could affect land uses by creating a new barrier dividing or disrupting existing communities. This is considered a significant impact at the program level.

Assessment of potential property impacts was based on the types of land uses adjacent to the HST alignment, the amount of right-of-way (ROW) potentially needed for the construction type, and the land use sensitivity to potential impacts. In some instances, relatively minor strips of property would be needed for temporary construction easements or permanent ROW for the proposed HST Alignment. In other instances, development of proposed facilities could result in acquisition, displacement, and/or relocation of existing structures. The types of property impacts that could occur include displacement of a residence or business or division of a farm or other land use in a way that makes it harder to use. Mitigation may also be required to maintain property access.

Overall, based on the analysis below, and considering the design practices, the Preferred Alternative has a high or medium land use compatibility along its entire length, there would be little or no community cohesion impacts, and property impacts range between low and medium. Given that portions of the alignment have medium ratings and given future uncertainties associated with land use development adjacent to the proposed alignment over the 20- to 25 year horizon for implementing the HST system, land use incompatibility is considered significant at this programmatic level. In many cases, local plans and ordinances do not address transportation options such as the HST system. In addition, many local land use plans and ordinances have not been updated for several years, though they may be updated over time to acknowledge and support implementation of a HST system.

At the project level, HST alignments would be refined for the Preferred Alternative in consultation with local governments and planning agencies, with consideration given to minimizing barrier effects in order to maintain neighborhood integrity. Potential land use displacement and property acquisition (temporary use and/or permanent and nonresidential property) are expected to be avoided to the extent feasible by also considering further alignment refinement at the project level. In addition, analysis at the project level would take into account relocation assistance in accordance with the Federal Uniform Relocation and Real Property Acquisition Policies Act of 1970.

Alignment

San Francisco to San Jose

Between San Francisco and San Jose, the alignment is considered to have high compatibility with existing land use because it would be constructed primarily within the existing Caltrain right of way . In San Francisco, between 4th & King and the Transbay Transit Center, the alignment would be constructed underground and would not have an effect on community cohesion. Because the alignment would primarily be within an existing, active commuter and freight rail corridor on the Peninsula, it would not constitute any new physical or psychological barriers that would divide,

disrupt, or isolate neighborhoods, individuals, or community focal points in the corridor. Construction of grade separations between San Francisco and San Jose would have a beneficial effect on community cohesion by improving circulation between neighborhood areas.

San Jose to Central Valley
Between San Jose and Gilroy, the alignment is considered to have high compatibility with existing land use because it would be constructed primarily within or adjacent to the existing Caltrain corridor. Between San Jose and Lick, the alignment is proposed to be located within the publicly owned right-of-way. Between Lick and Gilroy, the alignment would be adjacent to the UPRR right of way. East of Gilroy, the alignment veers from the existing right-of-way and is potentially incompatible as it proceeds through agricultural land and recreational areas. The alignment is compatible with existing land uses as it traverses along Henry Miller Road between Santa Nella and Elgin Avenue but becomes highly incompatible with agricultural land uses east of Elgin Avenue and the Grassland Ecological Area (GEA). Overall, this portion of the alignment has a medium land use compatibility rating.

Where this alignment would create a new transportation corridor (east of Gilroy), the alignment would primarily pass through agricultural or open space lands and would not result in community cohesion impacts on neighborhoods. The alignment along Henry Miller Road primarily passes through agricultural lands and would not result in community cohesion impacts on neighborhoods.

Central Valley
The UPRR alignment in the Central Valley would be adjacent to some residential development between Stockton and Modesto. The predominant land use adjoining the alignment consists of agricultural uses. Between the cities of Modesto and Chowchilla, along the existing UPRR corridor, land uses are mostly agricultural with some residential. This land use pattern is considered to have a medium compatibility with the alignment.

Throughout much of the Central Valley, the alignment follows the existing rail corridor. In many cases, smaller rural communities are developed along the existing UPRR railroad tracks. There would be little to no neighborhood cohesion impact on these communities as a result of the alignment. In larger communities such as Stockton, French Camp, Ripon, Modesto, Ceres, Atwater, Merced, and Chowchilla, the existing UPRR rail line already divides the community. A parallel, at-grade set of HST tracks would therefore not generally be expected to result in an additional physical separation which exists between land uses on either side of the corridor.

<u>Stations</u>

- Transbay Transit Center: An underground HST station at the proposed Transbay Transit Center in downtown San Francisco is highly compatible with the existing transportation use at the terminal site. The Transbay Transit Center station location is supportive of the high-intensity land use associated with the San Francisco financial district.
- Millbrae/SFO: The Millbrae/SFO HST station is highly compatible with the existing Caltrain/BART station and would support future planned use for the creation of a transit-oriented district surrounding the Millbrae BART/Caltrain station area. Construction of the HST parking and drop-off facilities would convert approximately 2 acres of commercial property to transportation use.
- Redwood City: An HST station at Redwood City is highly compatible with the existing Caltrain station and adjacent downtown commercial/service oriented uses. The station location would be consistent with the Redwood City Strategic General Plan, which promotes development of convenient transit alternatives to the use of the automobile.
- Palo Alto: An HST station at Palo Alto is highly compatible with existing land use in the area, including multifamily housing and other facilities associated with Stanford University, and would be consistent with the Palo Alto Comprehensive Plan, which supports the continued development

and improvement of the University Avenue Multi-modal Transit Station. Construction of the Palo Alto station, parking garage, and ancillary facilities would entail conversion of approximately 10 acres of industrial property to transportation use.

- San Jose (Diridon): The proposed San Jose (Diridon) station location is highly compatible with the existing San Jose Diridon Caltrain station and the surrounding industrial and high-density residential uses. The station location is consistent with the San Jose Downtown Strategy Plan that promotes redevelopment of the downtown toward the west and closer to the station location.
- Gilroy: The Gilroy station location is highly compatible with the existing Caltrain station and adjoining commercial uses but is incompatible with the adjacent single-family residential uses. The proposed station is consistent with the policies and actions stated in the Gilroy General Plan that place a high priority on strengthening and restoring the downtown area, including the development of an active multi-modal transit center. Although the proposed station location is incompatible with the existing low-density residential uses, the general plan promotes the future development of higher-density residential and mixed uses in close proximity to the Caltrain station and the multi-modal transit center.
- Modesto (Downtown): The Modesto (Downtown) station location area has a small amount of residential land uses. Predominant land uses are commercial and industrial, resulting in a high level of compatibility with the HST station location.
- Merced (Downtown): The Merced (Downtown) station location is characterized by a moderate amount of residential development and supportive community commercial and governmental functions. Given the extent of residential uses and the community-serving nature of the commercial activities (as opposed to more regional-serving uses), this station location option is assigned a medium compatibility rating.

Considering the CEQA thresholds of significance in the Revised Final Program EIR, this impact is considered significant when viewed on a region-wide basis.

Mitigation Strategies

The Authority finds that the following mitigation strategies can be refined and applied at the project-level to reduce this impact:

1. Continue to apply design practices to minimize property needed for the HST system and to stay within or adjacent to existing transportation corridors to the extent feasible.
2. Work with local governments to consider local plans and local access needs and to apply design practices to limit disruption to communities. Access may need to be modified, including possible over or undercrossings, where land acquisition results in a division of a farm or other land use.
3. The Authority will seek agreements with freight rail operators (UP and/or BNSF) to utilize portions of the existing rail right-of-way to the greatest feasible extent.
4. Work with local governments to enhance multi-modal connections for HST stations.
5. Coordinate with cities and counties to ensure that HST facilities will be consistent with land use planning processes and zoning ordinances.
6. Provide opportunities for community involvement early in project-level studies.
7. Hold design workshops in affected neighborhoods to develop understanding of vehicle, bicycle, and pedestrian linkages in order to preserve those linkages through use of grade-separated crossings and other measures.

8. Ensure that connectivity is maintained across the rail corridor (pedestrian/bicycle and vehicular crossings) where necessary to maintain neighborhood integrity.
9. Develop facility, landscape, and public art design standards for HST corridors that reflect the character of adjacent affected neighborhoods.
10. Maintain a high level of visual quality of HST facilities in neighborhood areas by implementing such measures as visual buffers, trees and other landscaping, architectural design, and public artwork.
11. The Authority will work with local governments to establish requirements for station area plans and opportunities for Transit Oriented Development (TOD). Local governments would play a significant role in implementing station area development by adopting plans, policies, zoning provisions, and incentives for higher densities, and by approving a mix of urban land uses. Station area TOD development principles to be applied at the project level for each HST Station include higher density development, mix of land uses, pedestrian-oriented design, context-sensitive building design, and parking limits and preferences.
12. Select station locations that are multi-modal transportation hubs with a preference for traditional city centers.
13. Adopt HST station area development policies and principles that require TOD, and promote value-capture at and around station areas as a condition for selecting a HST station site.
14. Provide incentives for local governments where potential HST stations may be located to prepare and adopt Station Area Plans and to amend City and County General Plans that incorporate station area development principles in the vicinity of HST stations.
15. Give priority to stations for which the city and/or county has adopted station area TOD plans and general plans that focus and prioritize development on the TOD areas rather than on auto-oriented outlying areas.
16. The Authority will undertake a comprehensive economic study in the Central Valley of the kinds of businesses that would uniquely benefit from being located near HST station areas, including an estimate of the kinds and numbers of jobs that such businesses would create.
17. The Authority will work with local governments, interested agencies and organizations, and provide funding and technical support, along with other partners, to build upon blueprint processes, to focus on supporting downtowns and increasing transit ridership, to increase development densities in the vicinity of HST station areas, and to assist in developing a vision with local partners as to how HST can encourage further in-fill development in Central Valley cities and support environmentally and economically sustainable future growth.

The Authority finds that the mitigation strategies described above will substantially lessen or avoid this impact; however, sufficient information is not available at the program-level to conclude with certainty that mitigation will reduce this impact to a less-than-significant impact in all circumstances. Therefore, for purposes of this programmatic EIR, the impact is considered significant and unavoidable.

The Authority further finds that certain of the above mitigation strategies related to planning for HST stations are partially within the responsibility of local governments and other public agencies and that these government agencies can and should adopt these mitigation strategies or an appropriate version of them at the project-level for planning of HST stations and their vicinities.

Impact 2. Short-Term Land Use Compatibility Impacts from HST Construction

In addition to the above noted potential impacts of the HST system resulting in a new barrier or dividing some established communities, short term impacts of the HST system during construction include potential neighborhood disruption and division. This impact would be reduced by phasing the construction of segments of the system and by the use of in-line construction techniques where appropriate. Considering the CEQA thresholds of significance in the Revised Final Program EIR, this impact is considered significant.

Mitigation Strategies

The Authority finds that the following mitigation strategies, along with mitigation identified for construction impacts on other resources (e.g., traffic, air quality, noise) can be refined and applied at the project-specific level to reduce this impact:

1. Develop a traffic management plan to reduce barrier effects during construction.
2. To the extent feasible maintain connectivity during construction.

The Authority finds that the mitigation strategies described above will substantially lessen or avoid this impact; however, sufficient information is not available at the program-level to conclude with certainty that mitigation will reduce this impact to a less-than-significant impact in all circumstances. Therefore, for purposes of this programmatic EIR, the impact is considered significant and unavoidable.

4.7 Agricultural Lands

Impact 1. Conversion of Prime, Statewide Important, and Unique Farmlands, and Farmlands of Local Importance, to Project Uses

The conversion of farmland is the change in the use of important farmland (i.e., farmland listed as prime, statewide important, unique, and farmland of local importance on the Department of Conservation's Farmland Mapping and Monitoring Program (FMMP) to non-agricultural uses. For alignments adjacent to existing railroad or highway corridors, the Revised Final Program EIR considered a study area of 100 feet from the rail right-of-way on the side selected for study. For new alignments in undeveloped areas, the study area was 50 feet on each side of the centerline of the alignment, for a total study area width of 100 feet. The study area was intended to capture the direct conversion of agricultural land to new transportation uses. The analysis identified the conversion of prime farmland, farmland of statewide importance, unique farmland, and farmland of local importance as listed in Table 4-6. Overall, the HST system could directly impact 1,128 acres of farmland.

Table 4-6
Farmland Summary Data Table for Preferred Alternative Alignment Alternatives and Station Location Options

Corridor	Preferred Alignment	Prime Farmland (Acres)	Farmland of Statewide Importance (Acres)	Unique Farmland (Acres)	Farmland of Local Importance (Acres)	Total (Acres)
San Francisco to San Jose: Caltrain	San Francisco to Dumbarton	-	-	-	-	-
	Dumbarton to San Jose	-	-	-	-	-
San Jose to	Pacheco	176	56.2	0	8.8	241

Table 4-6
Farmland Summary Data Table for Preferred Alternative
Alignment Alternatives and Station Location Options

Corridor	Preferred Alignment	Prime Farmland (Acres)	Farmland of Statewide Importance (Acres)	Unique Farmland (Acres)	Farmland of Local Importance (Acres)	Total (Acres)
Central Valley: Pacheco Pass	Henry Miller (UPRR Connection)	154.4	111.5	57.4	29.1	352.4
Central Valley	UPRR N/S	268.9	161.0	67.3	37.4	534.6
Station Location Options						
Transbay Transit Center		-	-	-	-	-
Millbrae/SFO		-	-	-	-	-
Redwood City (Caltrain)		-	-	-	-	-
Palo Alto (Caltrain)		-	-	-	-	-
San Jose (Diridon)		-	-	-	-	-
Gilroy (Caltrain)		-	-	-	-	-
Modesto (Downtown)		-	-	-	-	-
Merced (Downtown)		-	-	-	-	-

Alignment

The Preferred Alternative could convert approximately 1,128 acres of important farmland along the proposed alignments.

From San Francisco to San Jose, no potential impacts on farmland in any of the four farmland categories were identified because the area is already urbanized

Between San Jose and Gilroy, the San Jose to Central Valley alignment would encounter some farmland, primarily between the community of Coyote and Gilroy, west of the Diablo Range. Between the Diablo Range and the Central Valley the farmland is located primarily adjacent to Henry Miller Road and east of the Los Banos area. This alignment would convert a combined total of 593.4 acres of farmland.

Within the Central Valley, the alignment would convert a combined total of 534.6 acres of farmland.

Stations

The proposed station locations for the Preferred Pacheco Pass Network Alternative are not expected to result in any additional conversion of important farmland given the developed areas that stations would be located.

Considering the CEQA thresholds of significance in the Revised Final Program EIR, the potential for conversion of important farmland is considered a significant environmental impact.

Mitigation Strategies

The Authority finds that following mitigation strategies can be refined and applied at the project-specific level to avoid or reduce this impact:

1. Avoid farmland whenever feasible during the conceptual design stage of the project.
2. Reduce the potential for impacts by sharing existing rail rights-of-way where feasible or by aligning HST features immediately adjacent to existing rail rights-of-way.
3. Reduce the potential for impacts by reducing the HST right-of-way width to 50 feet in constrained areas.
4. Coordinate with private agricultural land trusts, local programs, mitigation banks, and Resource Conservation Districts to identify additional measures to limit important farmland conversion or provide further protection to existing important farmland.
5. The Authority, or other entities designated and supported by the Authority will acquire, from willing sellers, agricultural conservation easements encompassing at least 3,500 acres of important farmland (as defined by the FMMP). The eventual locations and total acreage for these easements would be determined in consultation with the California Department of Conservation, and others, and in conjunction with project-level decisions of the HST system.

The Authority finds that the mitigation strategies described above will substantially lessen this impact. In particular, the potential to locate portions of the alignment within existing transportation corridors can reduce the direct conversion of agricultural land to HST system uses to a negligible amount in some areas, such as along Henry Miller Road. At the project level, the Authority will share right-of-way to the extent feasible. Moreover, the use of conservation easements can provide permanent protection for agricultural and open space uses that will protect and promote the agricultural nature of selected easements lands in a manner not otherwise available. Accordingly, although the Authority finds that at least some conversion of agricultural land will be necessary to implement the HST system in the Bay Area to Central Valley Study area, the Authority finds that the above mitigation strategies will be effective in reducing this impact to a less-than-significant level.

Impact 2. Severance of Prime, Statewide Important, and Unique Farmlands, and Farmlands of Local Importance, due to Project Uses

Farmland severance is the division of one farmland parcel into two or more areas of operation by placement of a barrier through the parcel, in this case the HST system. Implementation of the HST system along the Preferred Pacheco Pass Network Alternative could potentially cause farmland severance in some locations. Specifically, farmland severance could occur along the Pacheco alignment and on the western and eastern ends of the Henry Miller UPRR Connection alignment, where the alignment would not be within an existing rail right-of-way or transportation corridor. Due to the programmatic nature of this analysis, it is not possible to estimate the number of parcels or acres that could be affected by severance.

Considering the CEQA thresholds of significance in the Revised Final Program EIR, the potential farmland severance is considered a significant environmental impact.

Mitigation Strategies

The Authority finds that the following mitigation strategies can be refined and applied at the project-specific level to reduce this impact:

1. Avoid farmland whenever feasible during the conceptual design stage of the project.

2. Minimize severance of agricultural land by constructing underpasses and overpasses at reasonable intervals to provide property access.
3. Work with landowners during final design of the system to enable adequate property access.
4. Provide appropriate severance payments to landowners.

The Authority finds that the mitigation strategies described above will substantially lessen this impact. Nevertheless, the Authority finds that at least some farmland severance may result from implementing the HST system in the Bay Area to Central Valley Study area, and it is unclear absent site-specific information that this impact can be mitigated to a less-than-significant level. Therefore, for purposes of this Programmatic EIR, the impact is considered significant and unavoidable.

4.8 Aesthetics and Visual Resources

The construction and operation of the HST system would alter existing scenic landscapes and cause impacts on visual resources related to the addition of infrastructure in, or removal of infrastructure from, the existing landscape. The infrastructure may include construction and improvements of the HST system, tunnels, fences, noise walls, elevated guideways, catenaries (support-pole systems for power supply for trains), and stations. Visual impacts will have a higher sensitivity in areas of scenic open space and mountain crossings. The programmatic analysis of the visual impacts focused on a broad comparison of potential impacts on visual resources (particularly scenic resources, areas of historic interest, and natural open space areas and significant ecological areas) along proposed HST alignments and around station locations. The Final Program EIR/EIS included photo simulations of conceptual design of the HST system and facilities for a set of representative landscapes and concentrated on the locations where elevated structures, tunnel portals, or areas with extensive cut or fill and proposed. Potential changes to the dominant landscape features, or potential visual impacts, were described and ranked as high, medium, or low according to the potential extent of change to existing visual resources. Visual contrast rankings, or impact rankings, were defined as follows:

- *High visual impacts* would be sustained if features of the alignment or station were obvious and began to dominate the landscape and detract from the existing landscape characteristics or scenic qualities.
- *Medium visual impacts* would be sustained if features of the alignment or station were readily discernable but did not dominate the landscape or detract from existing dominant features.
- *Low visual impacts* would be sustained if features of the alignment or station were consistent with the existing line, form, texture, and color of other elements in the landscape and did not stand out.
- *Shadow impact ranking* would be high if the new (not existing) elevated structure were within 75 feet of residential or open space, natural areas, or parkland.
- *Beneficial visual impact* would result if the alignment eliminated a dominant feature in the landscape that currently detracts from scenic qualities or blocks vistas.

Table 4-7 lists the visual impact ranking of the changes within each alignment and corridor.

Table 4-7
Visual Impacts Summary Data Table for Preferred Alternative Alignment Alternatives and Station Location Options

Corridor	Alignment	Change	Visual Impact Ranking	Alignment Visual Impact Ranking
San Francisco to San Jose: Caltrain	San Francisco to Dumbarton	Two additional tracks	Low	Low
		Pedestrian overcrossings at stations	High	
		Pedestrian undercrossings at stations	Low	
		Raised Caltrain right-of-way	Low	
	Dumbarton to San Jose	Two additional tracks	Low	Low
		Pedestrian overcrossings at stations	High	
		Pedestrian undercrossings at stations	Low	
		Raised Caltrain right-of-way	Low	
		New two-track bridge next to historic San Francisquito Creek truss bridge	Low	
		Two additional tracks at El Palo Alto Redwood	Low	
		Elevated facilities at Diridon San Jose station	Medium	
San Jose to Central Valley: Pacheco Pass	Pacheco	Elevated facilities at Diridon San Jose station	Medium	Medium
		Elevated facilities south of Diridon station	Low and shadowing impacts	
		Highway grade separations	Low	
		Addition of HST corridor adjacent to UPRR right of way	Medium	
		New transportation corridor between Gilroy and Pacheco Valley	Medium	
		Elevated crossing of SR 152 in Pacheco Valley	High	
		Cut and fill sections over Pacheco Pass	Medium	
	Henry Miller (UPRR Connection)	Trench alignment near San Joaquin National Cemetery	Medium	Low
		Elevated crossing of I-5	Low	
		Wetlands crossing	Medium	
		UPRR Connection	Low	
Central Valley	UPRR N/S	Elevated crossing of SR 4 viaduct in downtown Stockton	Medium	Low
		Elevated crossing of SR 99 near French Camp	Medium	
		Elevated structure through downtown Manteca	Low	
		Curve realignment in Modesto	Low	
		Elevated structure through downtown Turlock	Low	
		Elevated structure through downtown Chowchilla	Low	
		Curve realignment at Chowchilla River	Low	
Station Location Options				
Transbay Transit Center		Underground facilities at station	No	

Table 4-7
Visual Impacts Summary Data Table for Preferred Alternative
Alignment Alternatives and Station Location Options

Corridor	Alignment	Change	Visual Impact Ranking	Alignment Visual Impact Ranking
Millbrae/SFO		Additional two tracks west of existing tracks	No	
Redwood City (Caltrain)		Elevated four-track station	Low	
Palo Alto (Caltrain)		Additional track between existing tracks, one to the east of existing tracks, pedestrian underpasses	Low	
San Jose (Diridon)		Elevated concourse and platforms at San Jose Diridon station	Medium	
Gilroy (Caltrain)		Elevated station	Medium	
Modesto (Downtown)		At grade station	No	
Merced (Downtown)		At grade station	Low	

Impact 1. Long-term Visual Quality Impacts due to Operation

Because the HST alignment would primarily be placed within or adjacent to existing transportation corridors and many of the stations would be co-located with existing facilities and in urban areas, the overall visual impacts ranged from low to high.

Alignment

From San Francisco and San Jose, the Caltrain corridor would be expanded from two to four tracks. In most locations, the addition of two tracks would be within existing right-of-way and would have a low visual impact. In some cases, it would be necessary to remove mature trees. The addition of HST to the Caltrain corridor also would require full grade-separation of the railway with overcrossings resulting in visual impacts, and undercrossings that would result in low impact. The HST alignment would be visible from I-280, a designated state scenic highway, but due to the distance of about 1 mile and the industrial landscape in this area, no visual impact would occur. There are several historic stations along the Caltrain corridor. Many of the communities along the Caltrain corridor developed with construction of the railroad and many of the main streets are oriented toward the railroad corridor. Introduction of HST would result in a low visual impact. Overall, the alignment would have a low visual impact between San Francisco and San Jose.

Going south from San Jose, the line would run adjacent to Caltrain and UPRR on an elevated structure, in a retained fill section, and at-grade. The retained fill and aerial sections would be a low visual impact on the surrounding landscape, creating shadow impacts on residential areas immediately adjacent to the right-of-way. Where the alignment is at-grade through the urban and suburban landscape to Gilroy it would require removal of mature trees and result in a low to medium visual impact ranking. South of Gilroy, the landscape is rural agricultural and the alignment would have a medium visual impact, introducing a new transportation corridor to a rural area. At San Felipe, the line crosses SR-152, resulting in a high visual impact, and enters a series of tunnels to pass into the Pacheco Creek Valley and through Pacheco Pass. The visual impact of the section through the pass varies from none (tunnels), medium (deep cuts or fills), and high (crosses over SR-152, an eligible scenic highway in Santa Clara County and designated scenic highway in Merced County). Once through the pass, the alignment would follow Romero Creek and pass the San Joaquin National Cemetery in a trench, where the line would have a medium visual impact. The alignment would also pass O'Neill Forebay and the San Luis Reservoir State Recreation Area before reaching Santa Nella. At Santa Nella, the alignment would cross I-5, a designated state scenic highway, and would have a low visual impact due to existing structures and a roadway overcrossing.

East of Santa Nella, the line would traverse a landscape of rural agriculture and open space, including the Volta Wildlife Area and Los Banos Wildlife Area. The alignment would be placed on a 3-mile elevated structure to cross some wetland areas along Henry Miller Road. The introduction of the HST to the open space and near parklands would be a medium visual impact because the line would be low to the ground and would blend with the horizontal landscape. Overall, the alignment would have a low to medium visual impact between San Jose and the Central Valley.

The UPRR N/S alignment would generally run adjacent to the existing UPRR corridor unless an agreement to share right of way with UPRR can be reached. In many cases, grade separations would cross both the HST alignment and the UPRR tracks. Except at stations and where soundwalls are erected, these new grade separations, primarily in urban areas, would be the main visual impact of the HST in this corridor. Between Manteca and Fresno, the line would run parallel to both the UPRR Corridor and SR-99 and the introduction of the HST alignment would have no visual impact due to the existing twin lineal elements of the highway and railway. The alignment through Modesto would require the removal of existing buildings, resulting in a low visual impact because the area is dominated by the existing railway and freeway. An elevated structure would take the HST through downtown Turlock and have a low visual impact on the existing community. South of Merced, the line would continue alongside the UPRR corridor and SR-99 and would require new grade separations where the alignment crosses the railroad and freeway. Through Chowchilla, the HST would ascend to an elevated structure. This would have a low visual impact on the surrounding landscape. Overall, the alignment would have a low visual impact through the Central Valley.

Stations

The Transbay Transit Center would be constructed underground and would not result in any visual impacts. The Millbrae/SFO station site is an existing station where travelers transfer from Caltrain to BART to make the connection to the San Francisco International Airport and would not result in a visual impact. Where additional HST passenger boarding platforms would be required at existing stations a low visual impact would.

Because the City of San Jose is planning for an intensification of land uses in and around the San Jose (Diridon) station, the expanded HST station at this location would constitute a medium visual impact. The Gilroy (Caltrain) station would result in a medium visual impact due to the addition of four tracks and elevated HST facilities.

The Modesto (Downtown) station would be at grade, with sidings to serve the station platforms. The platforms would be accessed by an underground walkway, keeping the station profile low, resulting in no visual impact. The Merced (Downtown) station would also be at grade at the location of the now vacant Southern Pacific depot. To accommodate both conventional rail and HST, the station and platforms would need to be expanded. This would require the acquisition of adjacent property for both the station facilities and the expanded trackway serving the station. Because the station is at grade, the visual impact would be low.

Considering the CEQA thresholds of significance in the Revised Final Program EIR, the potential long-term visual impact is considered a significant environmental impact.

Mitigation Strategies

The Authority finds that the following mitigation strategies can be refined and applied at the project-level to reduce this impact:

1. At the project level, design proposed facilities that are attractive in their own right and that would integrate well into landscape contexts so as to reduce potential view blockage, contrast with existing landscape settings, light and shadow effects, and other potential visual impacts.

2. Design bridges and elevated guideways with graceful lines and minimal apparent bulk and shading effects.
3. Design elevated guideways, stations, and parking structures with sensitivity to the context, using exterior materials, colors, textures, and design details that are compatible with patterns in the surrounding natural and built environment and that minimize the contrast of the structures with their surroundings.
4. Use neutral colors and dulled finishes that minimize reflectivity for catenary support structures, and design them to fit the context of the specific locale.
5. Use aesthetically appropriate fencing along rights-of-way, including decorative fencing, where appropriate, and use dark and non-reflective colors for fencing to reduce visual contrast.
6. Where at-grade or depressed route segments pass through or along the edge of residential areas or heavily traveled roadways, install landscape treatments along the edge of the right-of-way to provide partial screening and to visually integrate the right-of-way into the residential context.
7. Use the minimum amount of night lighting consistent with that necessary for operations and safety.
8. Use shielded and hooded outdoor lighting directed to the area where the lighting is required, and use sensors and timers for lights not required to be on all of the time.
9. Design stations to minimize potential shadow impacts on adjacent pedestrian areas, parks, and residential areas, and site all structures in a way that minimizes shadow effects on sensitive portions of the surrounding area.
10. Seed and plant areas outside the operating rail trackbed that are disturbed by cut, fill, or grading to blend with surrounding vegetated areas where the land will support plants. Use native vegetation in appropriate locations and densities.
11. Use strategic plantings of fast-growing trees to provide partial or full screening of elevated guideways where they are close to residential areas, parks, and public open spaces.
12. Where elevated guideways are located down the median strips or along the edge of freeways or major roadways, use appropriate landscaping of the area under the guideway to provide a high level of visual interest. Landscaping in these areas should use attractive shrubs and groundcovers, and emphasize the use of low-growing species to minimize any additional shadow effects or blockage of views.

The Authority finds that while the mitigation strategies described above will substantially lessen impacts to aesthetics and visual resources, it is uncertain absent site-specific information that this impact can be mitigated to a less-than-significant level over. This is of greatest concern in areas where changes in scenic open space and mountain crossing areas are anticipated. As part of the site-specific design, many of the impacts on aesthetics and visual resources can be avoided or substantially mitigated. However, because of the size of the project and the variety of types of terrain it affects, the Authority does not have sufficient evidence to make that determination on a program-wide basis at this stage of design. Therefore, for purposes of this programmatic EIR, this impact is considered significant and unavoidable.

Impact 2. Short-term Visual Quality Impacts due to Construction

Construction of the HST system would have short-term impacts on visual resources that vary with the type of alignment (at-grade, elevated, tunnel, etc.) selected. The construction process is similar to that of roadway construction. For all above-grade construction activities and cut and cover tunnels, staging areas with construction materials, signage, and night lighting would be visible from adjacent properties and roadways during the construction period. The short-term visual impacts would vary from low to high, depending on the surrounding land uses.

Short-term visual impacts from grade separations, overpasses, underpasses, and short sections of tunnel would include increased truck traffic on local streets and the presence of construction machinery in the immediate area. Temporary detours of streets and adjacent rail lines (rail detours are known as shooflies) have the potential for high visual impacts.

Construction of elevated alignments would require placing piles and excavating foundations for the support columns, erecting formwork for columns that support the structure, delivering concrete to the site by truck, and constructing the elevated spans. The use of large construction machinery would be a high visual impact in most locations.

Construction of retained fill sections would require removal of existing topsoil and vegetation in the immediate construction area. To support the retaining walls, pile-supported concrete foundation beams would be built and pre-cast interlocking panels would be set in place. Truck traffic would be increased in the area as the soil and other materials are brought in and out of the site. The visual impact of the truck traffic would vary, from low to high, depending on general traffic conditions.

Construction of retained cut sections would involve steel sheet piles driven down each side of the excavation area. The tall pile-driving machinery would have a high visual impact. Detours would take roadways around the construction of permanent bridges to carry traffic over the completed cut section. Heavy machinery would be used for excavation and hauling soil away from the site and would create a visual impact.

Temporary stockpiles of excavated soil for cut and cover tunnels could create a medium to high visual impact.

The short-term visual impacts of bored tunnel construction would be confined to the tunnel portals and possible vent shafts. Short-term visual impacts would be high. Support facilities for tunneling include concrete plants, soil transfer stations, and construction offices. Tunnel vent shaft locations are less intrusive, yet the short term visual impact from construction would be high.

Mitigation Strategies

The Authority finds that the following mitigation strategies can be refined and applied at the project-level to reduce this impact:

1. Plan hours of construction operations and locate staging sites to minimize impacts to adjacent residents and businesses.
2. Screen construction sites, as appropriate, to minimize visual construction impacts.

The Authority finds that the mitigation strategies described above will substantially lessen or avoid this impact; however, sufficient information is not available at the program-level to conclude with certainty that mitigation will reduce this impact to a less-than-significant impact in all circumstances. Therefore, for purposes of this programmatic EIR, the impact is considered significant and unavoidable.

4.9 Public Utilities

Impact 1. Conflicts with Utilities

Improvements associated with the proposed HST system could cause conflicts between a proposed alignment alternative or station location and a pipeline or facility associated with a utility, including crossings. Because utilities are so prevalent in the Bay Area to Central Valley study region, the EIR/EIS could not practically assess each potential conflict. The evaluation considered three of the most common major facilities that may pose construction challenges as representative utility conflicts: electrical transmission lines, and natural gas facilities. To analyze the potential for conflicts between the HST system and utilities, the alignment alternatives and station location options were overlaid on available utility maps showing the locations of infrastructure for the three representative utilities.

The relative utility impact for each alignment alternative was identified by quantifying the number and type of potential conflict for each alternative, and then assigning a qualitative ranking of each conflict as low, medium, or high to describe its severity. High impact conflicts involve those with fixed facilities such as electrical substations or power plants, and large numbers of gas lines, or large pipelines. Low impact conflicts involve smaller wastewater pipelines, smaller numbers of gas lines, and smaller electrical facilities. For pipelines, the analysis also provided a medium ranking.

Alignment

The Revised Final Program EIR considered potential conflicts with natural gas pipelines and electrical transmission lines to be low or medium impact conflicts and less-than-significant because these utilities are generally relatively easy to avoid or relocate. Conflicts with fixed facilities such as electrical substations were considered high conflicts and significant.

As shown in Table 4-8, the Preferred Pacheco Pass Network Alternative could result in up to 75 conflicts with natural gas pipelines, 3 conflicts with electrical transmission lines, and 1 conflict with an electrical substation or power station. These conflicts are distributed as follows:

- San Francisco to San Jose Corridor: 30 natural gas pipelines (medium conflict)
- San Jose to Central Valley Corridor via Pacheco Pass and Henry Miller (UPRR Connection): 3 electrical transmission lines (low conflict) and 22 natural gas pipelines (high conflict)
- Central Valley Corridor via UPRR N/S: 1 electrical substation or power station (high conflict) and 23 natural gas pipelines (medium conflict)

Stations

None of the stations are anticipated to have conflicts with utilities.

Table 4-8
Utilities Summary Data Table for Preferred Alternative Alignment Alternatives and Station Location Options

Corridor	Preferred Alignment	Number of Electrical Transmission Lines	Number of Electrical Substations or Power Stations	Number of Natural Gas Pipelines
San Francisco to San Jose: Caltrain	San Francisco to Dumbarton	-	-	22
	Dumbarton to San Jose	-	-	8
San Jose to Central Valley: Pacheco Pass	Pacheco	2	-	14
	Henry Miller (UPRR Connection)	1	-	8
Central Valley	UPRR N/S	-	1	23
Station Location Options				
Transbay Transit Center		-	-	-
Millbrae/SFO		-	-	-
Redwood City (Caltrain)		-	-	-
Palo Alto (Caltrain)		-	-	-
San Jose (Diridon)		-	-	-
Gilroy (Caltrain)		-	-	-
Modesto (Downtown)		-	-	-
Merced (Downtown)		-	-	-

Considering the CEQA thresholds of significance in the Revised Final Program EIR, the potential for conflicts with utilities along the Preferred Pacheco Pass Network Alternative as a whole is considered a significant environmental impact.

Mitigation Strategies

The Authority finds that the following mitigation strategies can be refined and applied at the project-specific level to avoid or reduce this impact:

1. Make adjustments to the HST system alignments and vertical profiles to avoid crossing or using major utility right-of-way or fixed facilities during engineering design.
2. If avoidance is not feasible, in consultation and coordination with the utility owner, relocate or protect in place transmission lines, substations, and any other affected facilities.
3. For acquisition projects which result in utility relocation, follow the uniformity and equitable treatment policies, and comply with the requirements, of the Uniform Relocation Assistance and Real Property Acquisition Policies Act of 1970 for all property necessary for the proposed HST system.

The Authority finds that the mitigation strategies described above will avoid or reduce utilities conflicts impacts of the Preferred Pacheco Pass Network Alternative to a less-than-significant level.

4.10 Hazardous Materials and Wastes

Impact 1. Exposure of Workers or the Public to Hazardous Substances due to Disturbance of Known Contaminated Sites

Construction, operation, and maintenance of the Preferred Pacheco Pass Network Alternative could cause disturbance of existing, known hazardous waste sites or hazardous materials, in turn exposing workers and the general public to hazardous materials. For this programmatic analysis, a potential hazardous waste impact is considered wherever the route of a proposed alignment, station location option, or maintenance facility conflicts with a known contaminated site. The assessment for the Program EIR/EIS was limited to known and major hazardous materials sites and hazardous waste sites listed on the federal National Priorities List (NPL), the State Priority List (SPL), and the California Integrated Waste Management Board's list of solid waste landfills (SWLF) in the State of California as listed in Table 4-9. The sites that pose the greatest concern are those with soil or groundwater contamination within or adjacent to the right-of-way for a proposed alignment or a station facility, and those with groundwater contamination near areas where excavation down to groundwater would be necessary.

Table 4-9
Hazardous Materials Summary Data Table for Preferred Alternative Alignment Alternatives and Station Location Options

Corridor	Preferred Alignment	National Priorities List/ Superfund Listings	State Priority List Listings	Solid Waste Landfills Listings
San Francisco to San Jose: Caltrain	San Francisco to Dumbarton	-	-	22
	Dumbarton to San Jose	-	-	8
San Jose to Central Valley: Pacheco Pass	Pacheco	2	-	14
	Henry Miller (UPRR Connection)	1	-	8
Central Valley	UPRR N/S	-	1	23
Station Location Options				
Transbay Transit Center		-	-	-
Millbrae/SFO		-	-	-
Redwood City (Caltrain)		-	-	-
Palo Alto (Caltrain)		-	-	-
San Jose (Diridon)		-	-	-
Gilroy (Caltrain)		-	-	-
Modesto (Downtown)		-	-	-
Merced (Downtown)		-	-	-

Alignment

The Preferred Pacheco Pass Network Alternative involves a total of 79 hazardous materials/waste sites, distributed as follows:

- San Francisco to San Jose Corridor: 30 hazardous materials/waste sites, including 3 NPL sites, 0 SPL sites, and 30 SWLF sites.
- San Jose to Central Valley Corridor via Pacheco Pass and Henry Miller (UPRR Connection): 25 hazardous materials/waste sites, including 3 NPL sites, 0 SPL sites, and 22 SWLF sites.
- Central Valley Corridor via UPRR N/S: 24 hazardous materials/waste sites, including 0 NPL sites, 1 SPL sites, and 23 SWLF sites.

Stations

No known hazardous materials/waste sites were identified at the station location options for the Preferred Pacheco Pass Network Alternative.

Considering the CEQA thresholds of significance in the Revised Final Program EIR, the potential for exposing workers or the public to hazardous materials from disturbance of known contaminated sites is considered a significant environmental impact.

Mitigation Strategies

The Authority finds that the following mitigation strategies can be refined and applied at the project-specific level to avoid or reduce this impact:

1. Investigate soils and groundwater for contamination and prepare environmental site assessments when necessary and consult with Department of Toxic Substance Control (DTSC) and California Department of Conservation, Division of Oil, Gas, and Geothermal Resources (DOGGR) about sites of concern.
2. Design realignment of the HST corridors to avoid identified sites.
3. Relocate HST associated facilities such as stations to avoid identified sites.
4. Remediate identified hazardous materials and hazardous waste contamination.
5. Prior to demolition of buildings for project construction, survey for lead-based paint and asbestos-containing materials.
6. Follow BMP's for testing, treating, and disposing of water, and acquire necessary permits from the regional water quality control board, if ground dewatering is required.
7. When indicated by project level environmental site assessments, perform Phase II environmental site assessments in conformance with the ASTM Standards related to the Phase II Environmental Site Assessment Process to identify specific mitigation measures.
8. Prepare a Site Management Program/Contingency Plan prior to construction to address known and potential hazardous material issues, including:
    - Measures to address management of contaminated soil and groundwater;
    - Site-specific Health and Safety Plan (HASP), including measures to protect construction workers and general public; and
    - Procedures to protect workers and the general public in the event that unknown contamination or buried hazards are encountered.

9. As part of the second-tier environmental review, consider impacts to the environment on sites identified on the Cortese list (Government Code section 65962.4) at that time.

The Authority finds that the mitigation strategies described above will avoid or reduce impacts to the public and the environment as a result of construction or operation of the HST system to a less-than-significant level.

4.11 Cultural and Paleontological Resources

The EIR analyzed the occurrence of cultural and paleontological resources within an "Area of Potential Effect" or "APE." The APE was defined as: (1) 500 feet on each side of the centerline of proposed new rail routes where additional right-of-way could be needed; (2) 100 feet on each side of the centerline for routes along existing highways and railroad rights-of-way; and (1) 500 feet around station locations. For paleontological resources, the APE was defined as 100 feet on each side of the centerline of proposed rail routes and station locations in both urban and nonurban areas. For each resource type, the HST system was ranked as having low, medium, or high occurrence of the resource within the APE as listed in Table 4-10.

Table 4-10
Cultural Resources Summary Data Table for Preferred Alternative Alignment Alternatives and Station Location Options

Corridor	Preferred Alignment	Number of Recorded Archaeological Resources	Number of Recorded Architectural Resources	Traditional Cultural Properties	Cultural Resources Ranking (High, Medium, Low)	Paleontology Sensitivity (High, Medium, Low)
San Francisco to San Jose: Caltrain	San Francisco to Dumbarton	16	35	No	High	Low
	Dumbarton to San Jose	10	24	No	High (burials, Mission)	Low
San Jose to Central Valley: Pacheco Pass	Pacheco	7	5	No	Medium (heritage trees)	Low
	Henry Miller (UPRR Connection)	1	4	No	Medium	Low
Central Valley	UPRR N/S	4	63	No	Medium	Low
Station Location Options						
Transbay Transit Center		0	2	No	High*	Low
Millbrae/SFO		0	1	No	High	Low
Redwood City (Caltrain)		0	0	No	Low	Low
Palo Alto (Caltrain)		0	1	No	Medium	Low
San Jose (Diridon)		0	1	No	Medium	Low
Gilroy (Caltrain)		0	0	No	Low	Low
Modesto (Downtown)		0	0	No	Medium*	Low
Merced (Downtown)		0	0	No	Medium*	Low

Table 4-10
Cultural Resources Summary Data Table for Preferred Alternative
Alignment Alternatives and Station Location Options

Corridor	Preferred Alignment	Number of Recorded Archaeological Resources	Number of Recorded Architectural Resources	Traditional Cultural Properties	Cultural Resources Ranking (High, Medium, Low)	Paleontology Sensitivity (High, Medium, Low)
Note: * Based on knowledge and experience in the area of the APE.						

Impact 1. Impacts to Archaeological Resources and Traditional Cultural Properties

The HST could impact archaeological resources and traditional cultural properties by causing physical destruction or damage during construction. Archaeological resources include both prehistoric and historic sites. The EIR identified the number of known archaeological sites within the APE for alignments and stations. Based on the number of sites and expert knowledge of the area, a rating of sensitivity for archaeological resources was provided. Overall, the HST system has a low to high sensitivity for archaeological sites that have the potential to be impacted.

Alignment

From San Francisco to San Jose there is a high density of cultural resources, primarily within these two cities. In total, there are 26 recorded archaeological resources located within the APE. The area around San Francisco has been developed since before the 1850s and therefore is rich in archaeological sites. The majority of prehistoric sites are shell middens, and many of the historical sites are deposits from various activities dating from the late 1800s as well as the earthquake in 1906. One archaeological site in San Jose, the Santa Clara de Asis Mission, includes both prehistoric and historic resources and burials. This alignment has a high sensitivity for prehistoric and historical resources. No traditional cultural properties were identified within the APE.

Eight previously recorded archaeological resources are located within the APE from San Jose to the UPRR connection. These include prehistoric sites that typically include midden and lithic debitage. Though little archaeological work has been conducted in this area, it is known to be highly sensitive for prehistoric archaeological resources. No traditional cultural properties were identified within the APE.

The UPRR alignment generally follows existing railroad lines. In total, there are four previously recorded archaeological resources. These are prehistoric sites, such as a habitation site associated with burials, and historic sites that date to early 1900s industrial activities. Overall, this alignment alternative has medium sensitivity for cultural resources. No traditional cultural properties were identified within the APE.

Stations

No previously recorded archaeological sites were identified within the APE for the station location options. No traditional cultural properties were identified within the APE.

Considering the CEQA thresholds of significance in the Revised Final Program EIR, this impact is considered significant when viewed on a region-wide basis.

Mitigation Strategies

The Authority finds that the following mitigation strategies can be refined and applied at the project-specific level to reduce this impact:

1. Avoid the impact, or when avoidance cannot be accommodated, minimize the scale of the impact.
2. Incorporate the site into parks or open space.
3. Cap or cover the site before construction.
4. Provide data recovery for the archaeological resources, which may include excavation of an adequate sample of the site contents so that research questions applicable to the site can be addressed.
5. Develop procedures for fieldwork, identification, evaluation, and determination of potential effects to archaeological resources in consultation with SHPO and Native American tribes. Procedures may include on-site monitoring when sites are known or suspected of containing Native American human remains and be reflected in Memoranda of Agreement with appropriate bodies.
6. Coordinate and consult with tribal representatives.

The Authority finds that the mitigation strategies described above will substantially lessen or avoid this impact; however, sufficient information is not available at the program level to conclude with certainty that mitigation will reduce this impact to a less-than-significant level in all circumstances. Accordingly, the Authority finds this impact remains significant at the programmatic level.

Impact 2. Impacts to Historic Properties/Resources

The HST could impact historic properties and resources by causing physical destruction or damage. The EIR identified the number of known historic properties and resources within the APE for alignments and stations. Based on the number of sites and expert knowledge of the area, a rating of sensitivity for archaeological resources was provided. Overall, the HST system has a low to high sensitivity for archaeological sites that have the potential to be impacted.

<u>Alignment</u>

The alignment from San Francisco to San Jose has a high density of cultural resources within the city of San Francisco. In total, there are 59 recorded architectural resources. The area along the alignment has been developed since before the 1850s and therefore is rich in historical architecture and resources including structures, canals, and railroads. The alignment would extend through numerous historic districts. This alignment alternative has a high sensitivity for architectural resources.

Nine previously recorded architectural resources are located within the APE from San Jose to the UPRR connection. These include the Keesling shade trees, historic canals, bridge, and residences. Much of the area along the Henry Miller alignment has seen little development historically. Overall, this alignment alternative has medium sensitivity for cultural resources.

The UPRR alignment generally follows existing railroad lines. There are 63 recorded architectural resources within the APE. Most of the architectural resources are around the communities of Delhi, Livingston, Atwater, and Chowchilla. There are a series of historic canals and freeway bridges, as well as recorded commercial and residential properties dating from the 1890s. Overall, this alignment alternative has medium sensitivity for cultural resources.

Stations

Four of the station location options have recorded cultural resources that are within the APE. There are a total of 5 known resources within the APE of the station location options, including the Millbrae Train Station built in 1907, Palo Alto train station built in 1941, the Transbay Terminal and the Transbay Terminal Loop Ramp, and the San Jose Diridon station. The Transbay Transit Center station location option within San Francisco also has a large number of adjacent unrecorded architectural resources. No recorded resources were identified for either the Modesto (Downtown) or Merced (Downtown) station location options. Due to the location of these two station options, there is the potential for adjacent resources and was determined to have a medium sensitivity for architectural resources.

Considering the CEQA thresholds of significance in the Revised Final Program EIR, this impact is considered significant when viewed on a region-wide basis.

Mitigation Strategies

The Authority finds that the following mitigation strategies can be refined and applied at the project-specific level to reduce this impact:

1. Avoid the impact through project design. Prepare and utilize a treatment plan for protection of historic properties/resources that would describe methods to preserve, stabilize, shore/underpin, and monitor buildings, structures, and objects.
2. Avoid high vibration construction techniques in sensitive areas.
3. Record and document cultural resources that would be adversely affected by the project to the standards of the Historic American Building Survey or Historic American Engineering Record.
4. Develop design guidelines to ensure sympathetic, compatible, and appropriate designs for new construction.
5. Consult with architectural historians or historical architects to advise on appropriate architectural treatment of the structural design of proposed new structures. Prepare interpretive and/or educational materials and programs regarding the affected historic properties/resources. Materials may include: a popular report, documentary videos, booklets, and interpretive signage.
6. Make interpretive information available to state and local agencies, such as salvage items, historic drawings, interpretive drawings, current and historic photographs, models, and oral histories. Also assist with archiving and digitizing the documentation of the cultural resources affected, and disseminating material to the appropriate repositories.
7. Relocate and rehabilitate historic properties/resources that would otherwise be demolished because of the project.
8. Monitor project construction to ensure it conforms to design guidelines and any other treatment procedures agreed to by the parties consulting pursuant to Section 106 of the National Historic Preservation Act. Repair inadvertent damage to historic properties/resources in accordance with the Secretary of the Interior's Standards for Treatment of Historic Properties.
9. Salvage selected decorative or architectural elements of the adversely affected historic properties/resources, and retain and incorporate salvaged items into new construction where possible. If reuse is not possible, make salvaged items available for use in interpretive displays near the affected resources or in an appropriate museum.
10. Implement an agreement with appropriate bodies specifying procedures for addressing historic resources which may be affected by the HST system.

11. Evaluate the Keeling Shade Trees to determine if the resource is eligible for listing on the National Register of Historic Places. If eligible, determine whether the project would have an adverse effect under Section 106. If an adverse effect occurs, avoid the trees through project design or fill in existing gaps where specimens have died or are dying to offset removal of specimens by the project.

The Authority finds that the mitigation strategies described above will substantially lessen or avoid this impact; however, sufficient information is not available at the program level to conclude with certainty that mitigation will reduce this impact to a less-than-significant level in all circumstances. Accordingly, the Authority finds this impact remains significant at the programmatic level after the application of mitigation strategies.

Impact 3. Impacts to Paleontological Resources

The HST could impact paleontogical resources as a result of construction, including grading, cutting, tunneling, erecting pylons for elevated track, and due to station construction. The EIR identified the areas within the paleontological resources APE as having high, medium, or low sensitivity for paleontological resources based on the number of recorded resource localities and formations, as well as professional assessments of the significance of recovered resources from exposed rock units and the likelihood of recovering additional resources. While the majority of the HST alignment and stations would have low paleontological sensitivity, there are areas where there is the potential for high or undetermined sensitivity.

<u>Alignment</u>

From San Francisco to San Jose, the overall paleontological sensitivity is low. Nonsensitive Franciscan sandstone, Quaternary alluvium, and artificial bay fill would underlie the alignment.

The alignment from San Jose extends primarily through areas mapped as Franciscan ultramafic rocks and Quaternary terrace and alluvium, all ranking low in paleontological sensitivity. A portion of the alignment near Gilroy would have a high sensitivity since it passes through alluvial deposits similar to those which have yielded vertebrate fossils elsewhere. The remaining portion of the Pacheco alignment falls on nonsensitive lower and upper Cretaceous marine rocks. In the vicinity of San Luis Reservoir, the alignment crosses the Los Banos Alluvium, a sensitive unit that could include vertebrate fossils. The Pacheco and Modesto Formations along portions of the Henry Miller alignment have a moderate paleontological sensitivity. The remaining length of the Henry Miller alignment to the UPRR connection would not fall within fossil-bearing units and would not be sensitive for paleontological resources.

The UPRR alignment would have a low likelihood of encountering paleontological deposits.

<u>Stations</u>

The overall paleontological sensitivity for each of the station location options is low. Specific impacts to paleontologic resources associated with construction of the stations require additional information concerning exact locations and subsurface geology. Additional paleontological resources assessment would take place at the project level after the station designs are more fully defined.

Considering the CEQA thresholds of significance in the Revised Final Program EIR, the impact is considered significant when viewed on a region-wide basis.

Mitigation Strategies

The Authority finds that the following mitigation strategies can be refined and applied at the project-specific level to reduce this impact:

1. Educate workers.
2. Recover fossils identified during the field reconnaissance.
3. Monitor construction.
4. Develop protocols for handling fossils discovered during construction, such as temporary diversion of construction equipment so that the fossils could be recovered, identified, and prepared for dating, interpreting, and preserving at an established, permanent, accredited research facility.

The Authority finds that the mitigation strategies described above will substantially lessen or avoid this impact; however, sufficient information is not available at the program level to conclude with certainty that mitigation will reduce this impact to a less-than-significant level in all circumstances. Accordingly, the Authority finds this impact remains significant at the programmatic level.

4.12 Geology and Soils

Impact 1. Seismic Hazards

Seismic hazards evaluated for this EIR include ground shaking and ground failure. The HST could cause risks to workers and public safety due to the collapse or toppling of facilities, either during construction or after completion, due to strong earthquakes. The HST also could create risks to public safety from automobile accidents or the interruption of automobile circulation, if strong earthquakes cause a derailment. HST facilities could sustain damage due to secondary hazards (settlement) over soft or filled ground. Considering the CEQA thresholds of significance in the Revised Final Program EIR, this impact is considered significant when viewed on a region-wide basis.

Mitigation Strategies

The Authority finds that the following mitigation strategies can be refined and applied at the project-specific level to reduce this impact:

1. Design structures to withstand anticipated ground motion, using design options such as redundancy and ductility.
2. Prevent liquefaction and resulting structural damage and traffic hazards using: (a) ground modification techniques such as soil densification; and (b) structural design, such as deep foundations.
3. Utilize motion sensing instruments to provide ground motion data and a control system to temporarily shut down HST operations during or after an earthquake to reduce risks.
4. Design and engineer all structures for earthquake activity using Caltrans Seismic design Criteria.
5. Design and install foundations resistant to soil liquefaction and settlement.
6. Identify potential serpentinite bedrock disturbance areas and implement a safety plan.
7. Apply Section 19 requirements from the most current Caltrans Standard Specifications to ensure geotechnically stable slopes are planned and created.
8. Install passive or active gas venting systems and gas collection systems in areas where subsurface gases are identified.

9. Remove corrosive soil and use corrosion protected materials in infrastructure.
10. Address erosive soils through soil removal and replacement, geosynthetics, vegetation, and or rip/rap, where warranted.
11. Remove or moisture condition shrink/swell soils.
12. Utilize stone columns, grouting, and deep dynamic compaction in areas of potential liquefaction.
13. Utilize buttress berms, flattened slopes, drains, and/or tie-backs in areas of slope instability.
14. Avoid settlement through preloading, use of stone columns, deep dynamic compaction, grouting, and/or special foundation designs.

The Authority finds that the foregoing mitigation strategies will reduce this impact to a less-than-significant level.

Impact 2. Surface Rupture Hazards

The HST could cause risks to workers and public safety due to ground rupture along active faults, either during construction or after completion. The HST also could create secondary public safety risks caused by damage to highways or airports, or interruption of these transportation services, in the event of train derailment caused by ground rupture along active faults. Considering the CEQA thresholds of significance in the Revised Final Program EIR this impact is considered significant when viewed on a region-wide basis.

Mitigation Strategies

The Authority finds that the following mitigation strategies can be refined and applied at the project-specific level to reduce this impact:

1. Install early warning systems triggered by strong ground motion associated with ground rupture, such as linear monitoring systems (i.e., time domain reflectometers) along major highways and rail lines within the zone of potential rupture to provide early warnings and allow for temporary control of rail and automobile traffic to avoid and reduce risks.
2. Continue to modify alignments to avoid crossing known or mapped active faults within tunnels.
3. Avoid active faults to the extent possible. Where avoidance is not possible, cross active faults at grade and perpendicular to the fault line.

The Authority finds that the foregoing mitigation strategies will reduce this impact to a less-than-significant level.

Impact 3. Slope Instability

The HST could cause risks to workers and public safety due to the failure of natural or construction cut slopes or retention structures. Considering the CEQA thresholds of significance in the Revised Final Program EIR, this impact is considered significant when viewed on a region-wide basis.

Mitigation Strategies

The Authority finds that the following mitigation strategies can be refined and applied at the project-specific level to reduce this impact:

1. Install temporary and permanent slope reinforcement and protection, based on geotechnical investigations, and review of proposed earthwork and foundation excavation plans.

2. Conduct geotechnical inspections during construction to verify that no new, unanticipated conditions are encountered.
3. Incorporate slope monitoring in final design.

The Authority finds that the foregoing mitigation strategies will reduce this impact to a less-than-significant level.

Impact 4. Difficulty in Excavation

The HST alignment could cross areas with hard, unfractured bedrock that will be difficult to excavate using methods other than blasting, which may pose a safety risk. Faulted materials that may be present can result in instability in the face of a tunnel area, another hazard. Considering the CEQA thresholds of significance in the Revised Final Program EIR, this impact is considered significant when viewed on a region-wide basis.

Mitigation Strategies

The Authority finds that the following mitigation strategies can be refined and applied at the project-specific level to reduce this impact:

1. Identify areas of potentially difficult excavation to ensure safe practices.
2. Focus future geotechnical engineering and geologic investigations in areas of potentially difficult excavation.
3. Monitor conditions during and after construction.
4. Employ tunnel excavation and lining techniques to ensure safety.

The Authority finds that the foregoing mitigation strategies will reduce this impact to a less-than-significant level.

Impact 5. Hazards Related to Oil and Gas Fields

The HST could create the potential for migration of potentially explosive and/or toxic gases into subsurface facilities, such as tunnels or underground stations. Considering the CEQA thresholds of significance in the Revised Final Program EIR, this impact is considered significant when viewed on a region-wide basis.

Mitigation Strategies

The Authority finds that the following mitigation strategies can be refined and applied at the project-specific level to reduce this impact:

1. Follow federal and state Occupational Safety and Health Administration regulatory requirements for excavations.
2. Consult with other agencies such as the Department of Conservation's Division of Oil and Gas, or the Department of Toxic Substances Control regarding known areas of concern.
3. Use safe and explosion-proof equipment during construction.
4. Test for gases regularly.
5. Install monitoring systems and alarms in underground construction areas and facilities where subsurface gases are present.
6. Install gas barrier systems.

The Authority finds that the foregoing mitigation strategies will reduce this impact to a less-than-significant

4.13 Hydrology and Water Quality Impacts

For purposes of assessing the Bay Area to Central Valley HST impacts to water resources, a GIS analysis was completed for potential direct and indirect impacts. The potential direct impact study area is defined by the number of tracks of an HST Alignment Alternative and the presence of proposed new station facilities. This allowed for a larger area of analysis where the alignment would have a greater potential to affect the environment (i.e., is wider with more tracks). In locations where there would be two tracks, the area analyzed for direct impacts was 50 feet total width along the alignment both at-grade and on aerial structures. For alignments with four tracks and/or proposed new station facilities, the area analyzed for direct impact was 100 feet total width. Indirect impacts were evaluated for an area within 200 feet of all alignments and station location options. Potential tunnel impacts on hydrology/water resources were also considered using known information for groundwater and underground streams. Table 4-11 lists list the hydrology and water quality resources by alignment and station.

Table 4-11
Summary of Water Resource Impacts for Preferred Alternative Alignments and Station Location Options

Corridor	Preferred Alignment	100-Year Floodplain (Direct/ Indirect) in Acres	Streams (Direct/ Indirect) in Linear Feet	Lakes/ Bay (Direct/ Indirect) in Acres	Erosion (Direct/ Indirect) in Acres	Groundwater (Direct/ Indirect) in Acres	Section 303d Waters Affected
San Francisco to San Jose: Caltrain	San Francisco to Dumbarton	49.3 / 101	1,178 / 2,617	0 / 3.4	8.5 / 18	268 / 579	1
	Dumbarton to San Jose	46.5 / 74	1,435 / 2,649	-	-	239 / 518	6
San Jose to Central Valley: Pacheco Pass	Pacheco	103.4 / 304	2,674 / 9,215	-	41.8 / 146	451 / 1,031	5
	Henry Miller (UPRR Connection)	126.4 / 470	6,697 / 44,458	2.3 / 10	22.2 / 89	355 / 1,413	3
Central Valley	UPRR N/S	123.4 / 423	7,547 / 41,122	-	-	607 / 2,123	3
Station Location Options							
Transbay Transit Center		-	-	-	-	9 / 13	-
Millbrae/SFO		0 / 0.1	-	-	-	11 / 15	-
Redwood City (Caltrain)		-	-	-	-	6.2 / 9.5	-
Palo Alto (Caltrain)		-	-	-	-	21 / 27	-
San Jose (Diridon)		-	-	-	-	19 / 25	-
Gilroy (Caltrain)		-	-	-	-	40 / 47	-
Modesto (Downtown)		-	-	-	-	9 / 13	-
Merced (Downtown)		11.7 / 15	-	-	-	12 /15	-

Impact 1. Impacts on Floodplains

The HST system would encroach on 100-year floodplains. Direct encroachment into the floodplain by the HST system is anticipated to be approximately 449 acres and indirectly affect 1,372 acres. Floodplain encroachment may result in increased flood height from earthen berms or linear barriers to surface water flow.

Alignment

From San Francisco to San Jose, the HST has the potential to directly impact 96 acres of 100-year floodplains, primarily along the segments south of SFO, in Palo Alto, and in Sunnyvale. Within this corridor, the 100-year floodplain is often confined by the embankments of the existing Caltrain or roadway facility.

The footprint of the alignment from San Jose to the Central Valley has the potential to have direct impacts of approximately 130 acres on the 100-year floodplain and indirect effects of 774 acres. The largest area of floodplain being crossed along the Pacheco segment would be between Gilroy and the Diablo Range. Across the Diablo Range, the amount of 100-year floodplain is minimal and confined to canyons and the alignment is primarily in tunnels or on structures over canyons and streams. The Henry Miller portion of the alignment is primarily at-grade and adjacent to Henry Miller Road, except for an approximate 3-mile long structure that would extend across the floodplain. Impacts on the floodplain from aerial structures would be limited to column footings.

The UPRR alignment through the Central Valley could have direct impacts on approximately 123 acres on the 100-year floodplain and indirectly affect 423 acres, primarily between Atwater and Chowchilla. The alignment would be constructed at-grad in this location.

Stations

The Millbrae/SFO station would have the potential to indirectly affect less than 0.1 acre of the 100-year floodplain, which is contained by channel embankments east of the station site. The Merced (Downtown) station is wholly within the 100-year floodplain and would directly impact 11.7 acres of the 100-year floodplain and indirectly affect 15 acres.

Considering the CEQA thresholds of significance in the Revised Final Program EIR, the impact is considered significant when viewed on a region-wide basis.

Mitigation Strategies

The Authority finds that the following mitigation strategies can be refined and applied at the project-specific level to reduce this impact:

1. Avoid or minimize construction of facilities within floodplains where feasible.
2. Construct appropriately sized culverts under the trackway to convey anticipated storm flows and to minimize ponding.
3. Minimize the footprint of facilities within the floodplain, through design changes or the use of aerial structures and tunnels.
4. Restore the floodplain to be equivalent to its prior function in instances where the floodplain is impacted by construction.

The Authority finds that the mitigation strategies described above will reduce this impact to a less-than-significant level.

Impact 2. Impacts on Surface Waters

The HST system could encroach on surface water resources. The direct encroachment onto streams would be approximately 19,531 linear feet, while encroachment onto lakes and waterbodies would be approximately 2.3 acres. Indirectly, the HST could affect over 100,000 linear feet of streams and 13.4 acres of waterbodies. The HST would be on structures over watercourses and waterbodies and impacts from aerial structures would be limited to column footings. The HST would also add impervious surface area, which can reduce water infiltration, contribute to runoff, and negatively affect surface water quality. The HST could cause erosion or be affected by erosive soils, which can negatively affect water quality, where the alignment options would extend to or along highly erodible slopes. Within the direct footprint there are approximately 72.5 acres of erodible soils, and in the larger indirect study area there are 253 acres.

The HST alignment traverses at least 18 total maximum daily loads (TMDLs) impaired segments of water resources. The construction and operation of the HST is an unlikely source of most of the contaminants that impair the water resources, but some of the water resources are impaired for sediment and siltation, and construction may affect the sediment/silt loads. In addition, the sediment runoff from construction could potentially mobilize and release additional pesticides into some impaired waters.

Construction activities involving soil disturbance, excavation, cutting/filling, stockpiling, and grading activities could result in increased erosion and sedimentation to surface waters. Hazardous materials associated with construction equipment could also adversely affect water quality if spilled or stored improperly. In addition, construction in areas of high groundwater could require dewatering, with subsequent discharge to surface waters. This process could result in the release of sediment or other contaminants to surface waters. Water quality impacts from construction activities could violate water quality standards, exceed contaminant loadings in impaired waters, provide additional sources of polluted runoff, or otherwise degrade water quality.

Alignment

The San Francisco to San Jose alignment generally follows and is adjacent to the Caltrain corridor and minimizes impacts on water resources. At least 25 named and unnamed water resources in the area could be affected, including Oyster Point Channel, San Bruno Channel, San Bruno Canal, Colma Creek, Mills Creek, San Mateo Creek, Pulgas Creek, San Francisquito Creek, Matadero Creek, Barron Creek, Permenente Creek, Stevens Creek, Calabasas Creek, and Saratoga Creek. The HST has the potential to directly impact 2,613 linear feet of streams, creeks, and channels. The potential indirect impact to streams would be approximately 5,266 linear feet and the indirect impact to waterbodies would be 3.4 acres. Given the developed and urban area, the change in impervious surfaces would be minimal and impacts on surface water quality would be low. This alignment would extend through approximately 8.5 acres of erosive soil conditions and 18 acres in the larger indirect area in the area of Brisbane.

The San Jose to Central Valley alignment could potentially affect at least 57 unnamed and named water resources, including Los Gatos Creek, Guadalupe River, Little Llagas Creek, Llagas Creek, Miller Slough, Pajaro River, Pacheco Creek, Tequisquita Slough, Tule Lake, California Aqueduct, San Luis Creek, Mendota Canal, Main Canal, Los Banos Creek, Los Banos Wildlife Area, San Luis Wasteway, Mud Slough, Delta Canal, Santa Rita Slough/Salt Slough, San Joaquin River, Mariposa Slough, Chowchilla River, Ash Slough, and Berenda Slough.[1] The HST has the potential to directly impact

[1] Many of the water resources identified along the Henry Miller portion are manmade canals and ditches used to transport agricultural waters. It should be noted that the U.S. Army Corps of Engineers (USACE) or the California Department of Fish and Game (CDFG) do not consider all canals in the Central Valley to be jurisdictional waters. Certain canals that intercept natural drainages/streams and divert the water to another water body such as a reservoir or river can be considered jurisdictional. The USACE makes those determinations on a case-by-case basis. This would occur as part as part of the project level analysis in close coordination with the USACE and CDFG.

9,371 linear feet of streams, creeks, and channels and 2.3 acres of waterbodies. The potential indirect impact to streams would be approximately 53,674 linear feet, and the indirect impact to waterbodies would be 10 acres. The change in impervious surfaces within developed portions of the alignment between San Jose and Gilroy would be minimal since it would be adjacent to the existing Caltrain and roadway. South and east of Gilroy, the alignment extends through the Diablo Range and agricultural areas and would result in a slight increase in impervious surfaces; however, the HST would consist of permeable track-fill rather than impervious pavement resulting in a low runoff potential. Between Gilroy and the O'Neill Forebay, the alignment would extend through approximately 64 acres of erosive soil conditions and 235 acres in the larger indirect area. Much of the alignment through this area is within tunnel or on aerial structure.

The UPRR alignment through the Central Valley could potentially affect at least 35 unnamed and named streams, rivers, creeks, channels, and canals, including French Camp Slough/Littlejohns Creek; Stanislaus River; Lateral Numbers 8, 6, 7, 3, 4, and 1; Hetch Hetchy Aqueduct; Tuolumne River; Upper/Lower Lateral 3; Merced River; Bear Creek/Black Rascal/Hesse Lateral; Farmdale Lateral Miles Creek; Owens Creek; North Slough/Mariposa Creek; El Nido; South Slough; Deadman Creek; Dutchman Creek; Chowchilla River; and Ash Slough/Ash Slough Bypass.[1] The HST has the potential to directly impact 7,547 linear feet of streams, creeks, and channels, and have indirect effects on approximately 41,122 linear feet. The change in impervious surfaces within developed portions of the alignment would be minimal. In agricultural areas, there would be a slight increase in impervious surfaces; but, the HST would consist of permeable track-fill resulting in a low runoff potential. The alignment through the Central Valley would not encounter locations of erodible soils.

Stations

Given the urban settings for the station locations, none are anticipated to directly or indirectly affect streams, surface waterbodies, or be affected by erosive soils.

Considering the CEQA thresholds of significance in the Revised Final Program EIR, these impacts are considered significant when viewed on a region-wide basis.

Mitigation Strategies

The Authority finds that the following mitigation strategies can be refined and applied at the project-specific level to reduce this impact:

1. Use construction methods and facility designs to minimize the potential encroachments onto surface water resources.
2. Minimize sediment transport caused by construction by following best management practices (BMPs) as part of National Pollutant Discharge Elimination System (NPDES) and Storm Water Pollution Prevention Plan requirements that will be included in construction permits. BMPs may include measures such as:
   - providing permeable surfaces where feasible;
   - retaining and treating stormwater onsite using catch basins and filtering wet basins;
   - minimizing the contact of construction materials, equipment, and maintenance supplies with stormwater;
   - reducing erosion through soil stabilization, watering for dust control, installing perimeter silt fences, placing rice straw bales, and installing sediment basins;
   - maintaining water quality by using infiltration systems, detention systems, retention systems, constructed wetland systems, filtration systems, biofiltration/bioretention systems, grass buffer strips, ponding areas, organic mulch layers, planting soil beds, sand beds, and

vegetated systems such as swales and grass filter strips that are designed to convey and treat either fallow flow (swales) or sheetflow (filter strips) runoff.

3. Use methods such as habitat restoration, reconstruction of [habitat] onsite, and habitat replacement offsite to minimize surface water quality impacts.
4. Comply with mitigation measures included in permits issued under Sections 404 and 401 of the federal Clean Water Act.
5. Comply with requirements in the Storm Water Pollution Prevention Plan to reduce pollutants in storm water discharges and the potential for erosion and sedimentation.
6. Comply with requirements of Section 10 of the federal Rivers and Harbors Act for work required around a water body designated as navigable and applicable permit requirements.
7. Comply with the requirements of a state Streambed Alteration Agreement for work along the banks of various surface water bodies.
8. Implement a spill prevention and emergency response plan to handle potential fuel or other spills.
9. Where feasible, avoid significant development of facilities in areas that may have substantial erosion risk, including areas with erosive soils or steep slopes.

The Authority finds that the mitigation strategies described above will reduce this impact to a less-than-significant level.

Impact 3. Impacts on Groundwater

The HST system may encounter groundwater during construction of at- and above-grade structures, tunnels and tunnel portals, and dewatering may be necessary. In addition, construction and operation of the HST system components may affect groundwater recharge. Similar to surface waters, groundwater could be affected by construction activities. Construction in areas of high groundwater could require dewatering, with subsequent discharge to surface waters. This process could result in the release of sediment or other contaminants to surface waters. Construction activities such as excavation, trenching, or tunneling that occur in areas of high groundwater could impact groundwater supplies. The HST system has the potential to directly impact approximately 1,920 acres of groundwater and indirectly affect 5,664 acres.

<u>Alignment</u>

From San Francisco to San Jose the alignment would cross several groundwater basins including the San Francisco Sand Dune Area, Islais Valley, Santa Clara Valley, and the Visitacion Valley groundwater basins. The alignment would primarily be at-grade except as it approaches San Francisco and San Jose where it would be in tunnel and have the potential to encounter groundwater and may require dewatering. The alignment has the potential to directly impact approximately 507 acres of groundwater and 1,097 acres indirectly.

The groundwater basins between San Jose and the Central Valley include Santa Clara Valley, Gilroy-Hollister Valley and the San Joaquin Valley groundwater basins. The potential to encounter groundwater from San Jose to Gilroy would be limited to where column support footings would be required for aerial structures. Between Gilroy and the Diablo Range, the impacts on groundwater recharge would be low. The potential to encounter groundwater along the Henry Miller portion would be limited to the area east of Interstate 5 and the impacts on groundwater recharge would be low due to the overall footprint of the HST and permeable track-fill. The alignment has the potential to directly impact approximately 806 acres of groundwater and indirectly affect 2,444 acres.

The UPRR alignment through the Central Valley would have the potential to encounter groundwater because the whole Central Valley is underlain by groundwater. This alignment would be within the San Joaquin Valley groundwater basin. Through the Central Valley, this alignment would be constructed at-grade, on cut and fill, or on embankment with some aerial structures. The potential to encounter groundwater would be limited to locations where aerial structure column support footings would be required. Impacts on groundwater recharge would also be low due to the overall footprint of the HST and permeable track-fill. The UPRR alignment has the potential to directly impact approximately 607 acres of groundwater and indirectly affect 2,123 acres.

Stations

Each of the station location options would have the potential to encounter groundwater, in particular where stations are elevated on structures or in tunnel, such as the Transbay Transit Center. For elevated stations, the potential to encounter groundwater would be limited to locations where aerial structure column support footings would be required. Construction and operation of the Transbay Transit Center underground may require dewatering.

Considering the CEQA thresholds of significance in the Revised Final Program EIR, the impact is considered significant when viewed on a region-wide basis.

Mitigation Strategies

The Authority finds that the following mitigation strategies can be refined and applied at the project-specific level to reduce this impact:

1. Minimize development of facilities in areas that may have substantial groundwater discharge or affect recharge.
2. Apply for, obtain, and comply with conditions of applicable waste discharge requirements as part of project-level review.
3. Develop facility designs that are elevated, or at a minimum are permeable, and would not affect recharge potential where construction is required in areas of potentially substantial groundwater discharge or recharge.
4. Apply for and obtain a Storm Water Pollution Prevention Plan for grading, with Best Management Practices that would control release of contaminants nears areas of surface water or groundwater recharge. Best Management Practices may include constraining fueling and other sensitive activities to alternative locations, providing drip plans under some equipment, and providing daily checks of vehicle condition.
5. Use and retain native materials with high infiltration potential at the ground surface in areas that are critical to infiltration for groundwater recharge.

The Authority finds that the mitigation strategies described above will reduce this impact to a less-than-significant level.

4.14 Biological Resources and Wetlands

For purposes of assessing the Bay Area to Central Valley HST direct impacts to biological resources, a GIS analysis was completed for the approximate footprint of the facilities, called the representative facility footprint. This was defined to be 100 feet total width along the alignment both at-grade and on aerial structures. To capture the HST system's potential for indirect effects on species and habitats due to noise, light, or shadows, a larger area was evaluated. This larger area varied depending on the nature of the location. Sensitive habitat areas included a study envelope that was 2,000 feet in urban areas and 0.50 mile in rural areas and around station and facility areas in undeveloped areas, including biologically

sensitive locations. Table 4-12 lists the biological resource and wetland impacts by alignment and station.

Impact 1. Impacts to Sensitive Habitat and Vegetation Communities

Sensitive vegetation communities are natural communities and wildlife habitat that are unique, of relatively limited distribution in a region, or of particularly high wildlife value. The HST system could directly impact approximately 254 acres of sensitive vegetation out of the approximately 1,450 acres of land affected. The HST system could also fragment existing habitats. Additionally, the HST system could indirectly impact approximately 15,755 acres of sensitive vegetation out of the approximately 72,900 acres of land affected. The sensitive vegetation acreage is based on the buffer areas included in the HST study area, which were designed to provide context to the impacts analysis.

Alignment

The area from San Francisco to San Jose is mostly urbanized with little sensitive habitat. This alignment could have direct impacts on 5 acres of sensitive vegetation communities including seasonal wetlands and indirectly affect 138 acres.

The footprint of the alignment from San Jose to the Central Valley could have direct impacts on 207 acres of sensitive vegetation communities including oak woodlands, grasslands, riparian habitat, and seasonal and permanent freshwater wetlands. The alignment could also adversely impact approximately 11,895 acres of these sensitive vegetation communities, primarily grasslands. The footprint of this alignment encompasses approximately 670 acres and the indirect study area includes 35,200 acres.

The UPRR alignment through the Central Valley could have direct impacts on 42 acres of sensitive vegetation communities and habitat including grasslands and permanent freshwater wetlands. Indirect impacts on sensitive vegetation communities and habitat could occur on 3,722 acres including grasslands, oak woodlands, riparian habitat, and seasonal and permanent freshwater wetlands. The footprint of this alignment encompasses approximately 530 acres and the indirect study area includes 26,680 acres.

Stations

Given the urban settings for the station locations, none are anticipated to directly or indirectly affect sensitive vegetation communities or habitats.

Considering the CEQA thresholds of significance in the Revised Final Program EIR, the impact is considered significant when viewed on a region-wide basis.

Mitigation Strategies

The Authority finds that the following mitigation strategies can be refined and applied at the project-specific level to reduce this impact:

1. Utilize existing transportation corridors and rail lines to minimize potential impacts.
2. Use large diameter tunnels as part of the design to limit surface access needs in tunnels for ventilation or evacuation, as a method to avoid or limit impacts to vegetation and habitat above tunnels.
3. Use in-line construction (i.e., use new rail infrastructure as it is built) in ecological sensitive areas to transport equipment to/from the construction site and to transport excavated material away from the construction to appropriate re-use or disposal sites to minimize impacts from construction access roads on sensitive vegetation/habitat.

4. Accomplish necessary geologic exploration in sensitive areas by using helicopters to transport drilling equipment and for site restoration to minimize surface disruption.
5. Use and reuse excavated materials within the confines of the project.
6. Participate in or contribute to existing or proposed conservation banks or natural management areas, including possible acquisition, preservation, or restoration of habitats.
7. Revegetate/restore impacted areas, with a preference for on-site mitigation over off-site, and with a preference for off-site mitigation within the same watershed or in close proximity to the impact where feasible.
8. Comply with the Biological Resources Management Plan(s) developed or identified during project-level studies, as reviewed by the U.S. Fish and Wildlife Service (USFWS), California Department of Fish and Game (CDFG), and U.S. Army Corps of Engineers (USACE).
9. Conduct pre-construction focused biological surveys.
10. Conduct biological construction monitoring.
11. Undertake plant relocation, seed collection, plant propagation, and outplanting at suitable mitigation sites.
12. Prevent the spread of weeds and invasive species during construction and operation by identifying areas with existing weed/invasive species problems and measures to control traffic moving out of those areas such as cleaning construction vehicles or limiting the movement of fill.

The Authority finds that the mitigation strategies described above will substantially lessen or avoid this impact; however, sufficient information is not available at the program level to conclude with certainty that mitigation will reduce this impact to a less-than-significant level in all circumstances. Accordingly, the Authority finds this impact remains significant at the programmatic level after the application of mitigation strategies.

Impact 2. Impacts to Wildlife Movement Corridors

Wildlife movement/migration corridors link together areas of suitable wildlife habitat that are otherwise separated by rugged terrain, changes in vegetation, or human disturbance. These corridors are important for species survival. The HST system has the potential to affect wildlife movement/migration corridors where the alignment crosses wildlife movement corridors. In addition, fences that will be required for at-grade tracks will introduce a new barrier to animal movement. The actual impact will depend on the selection of final alignment and the final design of structures for the HST system.

<u>Alignment</u>

The area from San Francisco to San Jose is urbanized. All of the riparian and stream corridors between the Santa Cruz Mountains and the San Francisco Bay provide corridors for wildlife movement. There could be impacts on these streams and riparian corridors. The western shore of the San Francisco Bay provides a critical movement corridor for nesting and foraging birds and other wildlife, but impacts on the western side of the San Francisco Bay are expected to be minimal.

The streams, and associated riparian habitats, flowing from the Diablo Range and the Santa Cruz Mountains that would be crossed by the Pacheco alignment provide movement corridors for fish and wildlife species. The alignment would bisect movement corridors through the Diablo Range. Because the alignment would be elevated over drainages, it is not anticipated to impact the major drainages, such as Coyote Creek, the Pajaro River, Tres Pinos Creek, the Pacheco Creek, and other drainages, which provide wildlife movement corridors.

The Henry Miller alignment would bisect the major San Joaquin kit fox movement corridor between the southern portion of its range and the northern portion of its range along the west side of the San Joaquin Valley. This alignment also crosses the San Joaquin River, which is a movement corridor for fish and bird species.

The UPRR alignment alternative would bisect an east-west linkage corridor between the natural lands of the Central Valley (near the GEA and wildlife refuges) with the natural lands along the eastern side of the San Joaquin Valley.

Stations

None of the stations are anticipated to impact wildlife movement corridors

Considering the CEQA thresholds of significance in the Revised Final Program EIR, the impact is considered significant when viewed on a region-wide basis.

Mitigation Strategies

The Authority finds that the following mitigation strategies can be refined and applied at the project-specific level to reduce this impact:

1. Construct species specific appropriately sized wildlife underpasses, bridges, and/or large culverts, to facilitate known wildlife movement corridors.
2. Ensure that wildlife crossings are of a design, shape, and size to be sufficiently attractive to encourage wildlife use.
3. Provide appropriate vegetation to wildlife overcrossings and undercrossings to afford cover and meet other species requirements.
4. Establish functional corridors to provide connectivity to protected land zoned for uses that provide wildlife permeability.
5. Design protective measures for wildlife movement corridors using the following process in consultation with resource agencies:
   - Identify the habitat areas the corridor is designed to connect
   - Select several species of interest from the species present in the area
   - Evaluate the relevant needs of each selected species
   - For each potential corridor, evaluate how the area will accommodate movement by each species of interest
   - Draw the corridors on a map
   - Design a monitoring program
6. Utilize existing transportation corridors and rail lines to minimize potential impacts.
7. Use aerial structures or tunnels to allow for unhindered crossing by wildlife.

The Authority finds that the mitigation strategies described above will substantially lessen or avoid this impact; however, sufficient information is not available at the program level to conclude with certainty that mitigation will reduce this impact to a less-than-significant level in all circumstances. Accordingly, the Authority finds this impact remains significant at the programmatic level after the application of mitigation strategies.

Impact 3. Impacts to Non-wetland Jurisdictional Waters

The HST system has the potential to directly affect approximately 20,300 linear feet of non-wetland waters (lakes, rivers, streams, and other water bodies) and indirectly affect up to 100,000 linear feet of non-wetland waters.

Alignment

From San Francisco to San Jose the alignment has the potential to impact approximately 1,262 linear feet of non-wetland waters. This alignment is in proximity to the western shore of the San Francisco Bay and crosses several water resources, including Oyster Point Channel, San Mateo Creek, San Francisquito/Los Trancos Creek, Matadero Creek, Adobe Creek, and other small streams.

The San Jose to Central Valley alignment has the potential to directly impact approximately 2,548 linear feet of potential non-wetland waters. The Pacheco portion of the alignment would cross or be adjacent to a number of water resources, including Coyote Creek, Los Gatos Creek, Miller Slough, and the Pajaro River, and a number of other small streams. This Henry Miller portion of the alignment would cross the San Joaquin River, and a number of sloughs, and creeks.

The UPRR alignment through the Central Valley has the potential to directly impact approximately 7,161 linear feet of potential non-wetland waters which include the Stanislaus River, San Joaquin River, Tuolumne River, Merced River, Chowchilla River, and several other streams.

Stations

None of the stations are anticipated to non-wetland waters.

Considering the CEQA thresholds of significance in the Revised Final Program EIR, the impact is considered significant when viewed on a region-wide basis.

Mitigation Strategies

The Authority finds that the following mitigation strategies can be refined and applied at the project level to reduce this impact:

1. Utilize existing transportation corridors and rail lines to minimize potential impacts.
2. Return degraded habitat to pre-existing conditions.
3. Create new habitat by converting non-wetland habitats into wetland or other aquatic habitat.
4. Enhance existing habitats by increasing one or more functions through activities such as plantings or non-native vegetation eradication.
5. Provide for passive revegetation by allowing a disturbed area to revegetate naturally.
6. Purchase credits in an existing wetlands or aquatic habitat mitigation banks.
7. Provide in-lieu fee payments to an agency or other entity who will provide aquatic habitat conservation or restoration.
8. Prefer on-site mitigation over off-site mitigation, and for off-site mitigation prefer that it be located within the same watershed or as close in proximity to the area of impact as possible.

The Authority finds that the mitigation strategies described above will substantially lessen or avoid this impact; however, sufficient information is not available at the program level to conclude with certainty that mitigation will reduce this impact to a less-than-significant level in all circumstances. Accordingly, the Authority finds this impact remains significant at the programmatic level.

Impact 4. Impacts to Wetlands

The HST system could directly impact 14.8 acres of wetlands. The study area for the HST system indicates there are 1,518 acres of wetlands in the study area that may be indirectly affected by the HST system.

Alignment

From San Francisco to San Jose the alignment has the potential to directly impact approximately 0.08 acre of wetlands and indirectly affect 152 acres of wetlands. This alignment is in proximity to the western shore of the San Francisco Bay and crosses several water resources, including Oyster Point Channel, San Mateo Creek, San Francisquito/Los Trancos Creek, Matadero Creek, Adobe Creek, and other small streams.

The San Jose to Central Valley alignment has the potential to directly impact approximately 11.6 acres of wetlands and indirectly affect 1,230 acres of wetlands. The alignment would cross or be adjacent to Coyote Creek, Los Gatos Creek, Miller Slough, Pajaro River, San Joaquin River, and a number of sloughs, and creeks.

The UPRR alignment through the Central Valley has the potential to directly impact approximately 3.04 acres of wetlands and indirectly affect 136 acres of wetlands which include areas near rivers, streams, and vernal pools.

Stations

None of the stations are anticipated to wetlands.

Considering the thresholds of significance in the Revised Final Program EIR, the impact is considered significant when viewed on a region-wide basis.

Mitigation Strategies

The Authority finds that the following mitigation strategies can be refined and applied at the project level to reduce this impact:

1. Utilize existing transportation corridors and rail lines to minimize potential impacts.
2. Return degraded habitat to pre-existing conditions.
3. Create new habitat by converting non-wetland habitats into wetland or other aquatic habitat.
4. Enhance existing habitats by increasing one or more functions through activities such as plantings or non-native vegetation eradication.
5. Provide for passive revegetation by allowing a disturbed area to revegetate naturally.
6. Purchase credits in an existing wetlands or aquatic habitat mitigation bank.
7. Provide in-lieu fee payments to an agency or other entity who will provide aquatic habitat conservation or restoration.
8. Develop and implement measures to address the "no net loss" policy for wetlands.
9. Prefer on-site mitigation over off-site mitigation, and for off-site mitigation prefer that it be located within the same watershed or as close in proximity to the area of impact as possible.

The Authority finds that the mitigation strategies described above will substantially lessen or avoid this impact; however, sufficient information is not available at the program level to conclude with certainty that mitigation will reduce this impact to a less-than-significant level in all circumstances. Accordingly,

the Authority finds this impact remains significant at the programmatic level after the application of mitigation strategies.

Impact 5. Impacts to Marine and Anadromous Fishery Resources

The HST system has the potential to affect fishery resources during construction due to the need to cross streams and rivers. Construction activities could increase sediment loads in stormwater during rain, or be a source of chemicals, both of which could be released into creeks and harm aquatic resources.

Alignment

The San Francisco to San Jose, San Jose to Central Valley, and Central Valley alignments would each have the potential to impact marine/anadromous species.

Stations

None of the proposed stations for the Preferred Alternative would have the potential to impact marine/anadromous species.

Considering the CEQA thresholds of significance in the Revised Final Program EIR, the impact is considered significant when viewed on a region-wide basis.

Mitigation Strategies

The Authority finds that the following mitigation strategies can be refined and applied at the project-specific level to reduce this impact:

1. Utilize existing transportation corridors and rail lines to minimize potential impacts.
2. Comply with the terms of a CDFG Streambed Alteration Agreement for work along banks of surface water bodies.
3. Implement a spill prevention and emergency response plan to handle potential fuel or other spills.
4. Incorporate bio-filtration swales to intercept runoff.
5. Where feasible, avoid significant development of facilities in areas that may have substantial erosion risk, including areas with erosive soils and steep slopes.

The Authority finds that the mitigation strategies described above will substantially lessen or avoid this impact; however sufficient information is not available at the programmatic level to conclude with certainty that mitigation will reduce this impact to a less-than-significant level in all circumstances. Accordingly, the Authority finds this impact remains significant at the programmatic level after the application of mitigation strategies.

Impact 6. Impacts to Special-Status Species

The HST system could directly impact approximately 59 special-status plant species and 54 special-status wildlife species based on the representative facility footprint. Those species that are federally or state listed as threatened or endangered would be of special concern because of the protection afforded them under the federal Endangered Species Act and the California Endangered Species Act. The data in Table 4-11 identify species within the footprint of each alignment. However, species may occur in more than one alignment, therefore the data are not additive. The study area for the HST system indicates the possible presence of more than 130 special-status species that could be indirectly affected by the HST system. Some of these species could be affected by the construction and the operation of the HST system.

Alignment

From San Francisco to San Jose the alignment has the potential to affect 19 special-status plant species including the San Mateo thorn-mint, Tiburon Indian paintbrush, Marin western flax, Contra Costa goldfields, and the white-rayed pentachaeta. This alignment also has the potential to affect 31 special-status wildlife species including the Bay checkerspot butterfly, callippe silverspot butterfly, mission blue butterfly, Myrtle's silverspot butterfly, San Bruno elfin, California red-legged frog, California tiger salamander, San Francisco garter snake, Brown Pelican, California black rail, California clapper rail, California least tern, and the salt marsh harvest mouse. The alignment from San Francisco to San Jose could also adversely impact the South San Francisco Bay Core Area identified in the *Recovery Plan for the California Red-legged Frog* (U.S. Fish and Wildlife Service 2002).

The alignment from San Jose to the Central Valley could adversely affect the habitat of an additional 35 special-status plant species, including succulent owl's-clover, Coyote ceanothus Hoover's spurge, Santa Clara Valley dudleya, Colusa grass, San Joaquin Valley Orcutt grass, hairy Orcutt grass, Metcalf Canyon jewel-flower, showy Indian clover, and Greene's tuctoria. This alignment also has the potential to affect an additional 21 special-status wildlife species including the valley elderberry longhorn beetle, vernal pool fairy shrimp, vernal pool tadpole shrimp, blunt-nosed leopard lizard, giant garter snake, American peregrine falcon, least Bell's vireo, Swainson's hawk, willow flycatcher, riparian (San Joaquin Valley) woodrat, riparian brush rabbit, and the San Joaquin kit fox.

The UPRR alignment in the Central Valley could adversely affect an additional five special-status plant species including the palmate-bracted bird's beak and two additional special-status wildlife species including the conservancy fairy shrimp.

Stations

The Transbay Transit Center could adversely affect the habitat of one special-status plant species, the beach layia. The Palo Alto (Caltrain) and San Jose (Diridon) station options could adversely affect the habitat of the California tiger salamander. The San Jose (Diridon) station could also adversely affect the habitat of the robust spineflower. The Gilroy (Caltrain) station could adversely affect the habitat of the showy Indian clover. The Modesto (Downtown) station could adversely affect the valley elderberry longhorn beetle, and the Merced (Downtown) station could adversely affect the giant garter snake.

Considering the CEQA thresholds of significance in the Revised Final Program EIR, the impact is considered significant when viewed on a region-wide basis.

Mitigation Strategies

The Authority finds that the following mitigation strategies can be refined and applied at the project-specific level to reduce this impact:

1. Utilize existing transportation corridors and rail lines to minimize potential impacts.
2. Relocate sensitive species.
3. Conduct seed collection and plant propagation for sensitive plant species.
4. Conduct pre-construction focused surveys.
5. Conduct biological construction monitoring.
6. Restore suitable breeding and foraging habitat.
7. Purchase credits from an existing mitigation bank.
8. Participate in an existing Habitat Conservation Plan.

9. Phase construction around the breeding season.

The Authority finds that the mitigation strategies described above will substantially lessen or avoid this impact; however, sufficient information is not available at the program level to conclude with certainty that mitigation will reduce this impact to a less-than-significant level in all circumstances. Accordingly, the Authority finds this impact remains significant at the programmatic level after the application of mitigation strategies.

Impact 7. Impacts to Protected Habitats and Conservation Areas

The HST system could directly impact protected habitat areas and areas identified for conservation.

Alignment

The alignment from San Francisco to San Jose is not anticipated to impact protected habitat areas or areas identified for conservation.

The alignment from San Jose to the Central Valley would traverse lands that have been protected by the Nature Conservancy as part of its Mount Hamilton Project and could have adverse impacts on these lands. It would also extend through the CDFG-managed Upper Cottonwood Creek Wildlife Area resulting in adverse impacts where the alignment is not in tunnel. The Henry Miller portion of the alignment would adversely impact a portion of the 240,000 acre Grassland Ecological Area (GEA) which contains a unique assemblage of migratory birds, sensitive species, wetlands, and habitat values.

The UPRR alignment in the Central Valley is not anticipated to impact protected habitat areas or areas identified for conservation.

Stations

None of the station options are anticipated to impact protected habitat areas or areas identified for conservation.

Considering the CEQA thresholds of significance in the Revised Final Program EIR, the impact is considered significant when viewed on a region-wide basis.

Mitigation Strategies

The Authority finds that the following mitigation strategies, identified for impacts to the GEA, can be refined and applied at the project-specific level to reduce this impact:

1. Conduct focused surveys within areas of the GEA directly affected by proposed HST tracks or facilities, including sensitive habitats, and special-status plant and wildlife species.
2. Conduct project-level evaluations of biological resources in the GEA to determine impacts from HST construction, operation and maintenance, including, but not limited to, ecosystem fragmentation impacts, impacts to wildlife movement corridors, impacts to waterfowl flight patterns, noise impacts, startle and vibration impacts, collision impacts, electrocution impacts, glare impacts, water quality and water flow impacts, impacts on waterfowl nesting and breeding areas, impacts on migratory habits, impacts from construction traffic, impacts of equipment storage and laydown areas, impacts from blasting and pile-driving, and impacts from temporary disruption of water supply deliveries.
3. Minimize the footprint of necessary HST facilities to the extent feasible in the HST alignment crossing the GEA.

4. The Authority commits to construct an elevated structure along a three-mile portion of Henry Miller Road to minimize impacts on sensitive areas, including wetlands and habitat.
5. Consult with CDFG, USFWS, and the Grassland Water District, on the timing of construction activities within the GEA and in developing measures to minimize disturbance during nesting and flooding seasons.
6. Consult with CDFG, USFWS, and the Grassland Water District, on non-glare and directed lighting and appropriate measures to avoid disturbance impacts to sensitive species in areas of the GEA directly affected by proposed HST facilities.
7. The Authority, or other entities designated and supported by the Authority will acquire, from willing sellers, agricultural, conservation and/or open space easements encompassing at least 10,000 acres and generally located along or in the vicinity of the HST alignment and within or adjacent to the designated GEA. The focus for these easements will be in areas undergoing development pressures, such as the areas around Los Banos and Volta, and/or areas that would be most appropriate for ecological conservation or restoration. The eventual locations and total acreage for these easements would be determined in consultation with the CDFG, the USFWS, and the Grassland Water District and in conjunction with project-level decisions addressing the Gilroy to Merced portion of the HST system.

These specific measures were developed to address the following goals:

- Satisfy the future project level requirements of the resource agencies (e.g., CDFG, USFWS, and USACE) to offset impacts to wetlands, sensitive plant and wildlife species, and other biological resources in and around the GEA and other areas along the alignment (as indentified in Impacts 1 through 4, 6, and 7 above);
- Anticipate future pressures for growth in and around the GEA and provide a mechanism to prevent further impacts by forestalling that growth and preserving the habitat and scenic open space values in and around the GEA; and
- Provide assurance that project-level impacts will be evaluated at the appropriate level of detail.

Refer to Mitigation Strategies identified in section 4.15, Public Parks and Recreation Resources, regarding Upper Cottonwood Creek Wildlife Area.

The Authority finds that the mitigation strategies described above will be very likely to substantially lessen this impact. The Authority further finds that the mitigation strategies described above offer the added benefit of supporting conservation of wetlands and sensitive ecological areas and limiting urban encroachment in the vicinity of the HST through the GEA in a manner that would not be available through other foreseeable means. Sufficient information is not available at the program level, however, to conclude with certainty that mitigation will necessarily reduce this impact to a less-than-significant level. Project-level details are needed to reach this conclusion, such as the precise location of the HST tracks, precise species data to be gathered through site-specific surveys, and information about the willingness of land owners in different locations to participate in conservation easements. Accordingly, at the program level, and out of an abundance of caution, the Authority finds this impact remains significant at the programmatic level even with the adoption of mitigation strategies.

Table 4-12
Biological Resource Summary Data Table for Preferred Alternative Alignments and Station Location Options

Corridor	Preferred Alignment	Sensitive Vegetation Communities (Acres)	Number of Special-Status Plant Species*	Number of Special-Status Wildlife Species*	Wildlife Movement Corridor	Non-Wetland Waters (Linear Feet)	Wetlands (Acres)	Marine/ Anadromous Fish Resources	Protected Habitat / Areas of Conservation
San Francisco to San Jose: Caltrain	San Francisco to Dumbarton	5 direct 138 indirect	19	30	West side of San Francisco Bay and riparian and stream corridors	590	0.08 direct 148 indirect	Yes	-
	Dumbarton to San Jose	-	5	18		672	0 direct 4 indirect	Yes	
San Jose to Central Valley: Pacheco Pass	Pacheco	75 direct 4,895 indirect	23	24	Between Santa Clara Valley and San Joaquin Valley	1,960	0.11 direct 44 indirect	Yes	Mount Hamilton Project (TNC), Upper Cottonwood Creek Wildlife Area (CDFG)
	Henry Miller (UPRR Connection)	132 direct 7,000 indirect	25	33	Along west side of San Joaquin Valley and San Joaquin River	10,588	11.61 direct 1,186 indirect	No	Grassland Ecological Area
Central Valley	UPRR N/S	42 direct 3,722 indirect	22	22	East-west linkage between valley natural lands and natural lands along east side of San Joaquin valley	7,161	3.04 direct 136 indirect	Yes	-
Station Location Options									
Transbay Transit Center		-	1	-	West side of San Francisco Bay and riparian and stream corridors	-	-	No	-
Millbrae/SFO		-	-	-		-	-	No	-
Redwood City (Caltrain)		-	-	-		-	-	No	-

Table 4-12
Biological Resource Summary Data Table for Preferred Alternative Alignments and Station Location Options

Corridor	Preferred Alignment	Sensitive Vegetation Communities (Acres)	Number of Special-Status Plant Species*	Number of Special-Status Wildlife Species*	Wildlife Movement Corridor	Non-Wetland Waters (Linear Feet)	Wetlands (Acres)	Marine/ Anadromous Fish Resources	Protected Habitat / Areas of Conservation
Palo Alto (Caltrain)		-	-	1		-	-	No	-
San Jose (Diridon)		-	1	1	Between Santa Clara Valley and San Joaquin Valley	-	-	No	-
Gilroy (Caltrain)		-	1	-		-	-	No	-
Modesto (Downtown)		-	-	1	East-west linkage between valley natural lands and natural lands along east side of San Joaquin valley	-	-	No	-
Merced (Downtown)		-	-	1		-	-	No	-

Note: * Special-status species may occur in more than one alignment; therefore the data are not additive.

4.15 Public Parks and Recreation Resources

To analyze the potential for the HST system to result in impacts to parks and recreation resources, including publicly owned parks, wildlife and waterfowl refuges, historic sites of national, state or local significance, and other recreational resources, the EIR examined the occurrence of these resources within 900 feet from the location of proposed HST facilities and considered both direct and proximity (indirect) impacts. The recreation resources identified in the analysis are covered by either section 4(f) of the federal Transportation Act or section 6(f) of the federal Land and Water Conservation Fund Act. The two referenced federal statutes require special efforts to be made in planning proposed transportation projects to avoid using and limit adverse impacts to publicly owned park and recreation lands and will require findings to be made by FRA in future project-level reviews to address federal statutory requirements. Impacts to historic resources from the HST system are addressed in section 4.11, Cultural and Paleontological Resources.

Impact 1. Impacts to Parks and Recreational Resources

The HST system could result in direct impacts to lands containing publicly owned parks and recreational resources by causing use of such lands for the placement of HST facilities, and could result in indirect impacts to these resources due to construction activities or HST system operations which adversely affect the use of publicly owned parks and recreational resources. In addition to addressing noise, biology, and air quality impacts in other sections of these Findings, the EIR identifies the park and recreational resources located within 900 feet of the centerline of HST alignments or facilities.

The strategies of placing the proposed HST system in or along existing transportation corridors (existing railroad or highway rights of way) or in a tunnel and of requiring stations to be multi-modal transit hubs serve to reduce the extent of land acquisition needed for the proposed HST system, and has minimized the potential for the HST system impacts to parks and recreational resources. Nearly two thirds of the preferred alternative alignment identified in the Final EIR is either within or adjacent to existing transportation corridors or in tunnel.

Table 4-13 provides a listing by distance category of state, regional, county, and local parks, recreational areas, playgrounds, fairgrounds, and wildlife areas within 900 feet of the Preferred Alternative alignment. As shown, 51 of these resources are within 900 feet of the alignment, and 19 are within 150 feet of the HST system. At the program level it is not possible to know precisely the location, extent and particular characteristics of impacts to park resources. Due to this uncertainty, for the purposes of region-wide review at the programmatic level, this impact is considered significant, particularly for those resources within 150 feet. A discussion of these resources by corridor and alignment is provided below.

Table 4-13
State, Regional, County, and Local Parks, Recreational Areas, Playgrounds, Fairgrounds, and Wildlife Areas Within 900 Feet of the Preferred Alternative Alignment

Corridor	Alignment	Segment	Proximity and Distance from Centerline	Potential for Significant Impact
San Francisco to San Jose: Caltrain	San Francisco to Dumbarton	Transbay Transit Center to Millbrae/SFO	<150 feet – Herman Street Park	High
			<450 feet – Bayshore Circle Park, Forest Lane Park, Lions Field Park, Bayside Park	Medium
			<900 feet – Bayview Playground, Lomita Park, San Bruno Mountain State & County Park	Low

Table 4-13
State, Regional, County, and Local Parks, Recreational Areas, Playgrounds, Fairgrounds, and Wildlife Areas Within 900 Feet of the Preferred Alternative Alignment

Corridor	Alignment	Segment	Proximity and Distance from Centerline	Potential for Significant Impact
		Millbrae/SFO to Redwood City	< 150 feet – Washington Park, Trinta Park, San Mateo County Fairgrounds	High
			< 450 feet – Village Park, Laguna Park, Alexander Park, Laureola Park	Medium
			< 900 feet – Martin Luther King Park, Central Park, Mezes Park	Low
	Dumbarton to San Jose	Dumbarton to Palo Alto	< 150 feet – Holbrook Palmer Park, El Camino Park	High
			< 450 feet – Burgess Park	Medium
		Palo Alto to Santa Clara	< 150 feet – Peers Park, Bowden Park, Rengstorff Park, Bracher Park	High
			< 450 feet – Robles Park, Rex Manor Park, Lafayette Park	Medium
			< 900 feet – Boulware Park	Low
		Santa Clara to Diridon Station	< 900 feet – Guadalupe Gardens	Low
San Jose to Central Valley: Pacheco Pass	Pacheco	Diridon to Morgan Hill	< 150 feet – Edenvale Garden Park, Coyote Creek Park	High
			< 450 feet – Biebrach Park	Medium
			< 900 feet – Danna Rock Park	Low
		Morgan Hill to Gilroy	< 900 feet – Miller Park, Forest Street Park	Low
		Gilroy to San Luis Reservoir	< 150 feet – Upper Cottonwood Wildlife Area	High
	Henry Miller (UPRR Connection)	San Luis Reservoir to Valley Floor	No 4(f) or 6(f) resources within 900 feet of the segment.	Not Applicable
		Western Valley to Henry Miller UP Wye	< 150 feet – Los Banos Wildlife Area	High
Central Valley	UPRR	BNSF/UPRR South to Modesto	< 150 feet – County Park	High
			< 450 feet – Highway Village Park, JM Pike Park	Medium
			< 900 feet – Salida Park	Low
		UPRR Modesto South – Western Option	< 150 feet – Tuolumne River Regional Park	High
		South Modesto to BNSF Connection	< 150 feet – Stanislaus County Fairgrounds, Broadway Park, Central Park	High
			< 450 feet – Riverdale Fishing Access Park, Independence Park, Whitmore Park	Medium
			< 900 feet – Redwood Park	Low

Table 4-13
State, Regional, County, and Local Parks, Recreational Areas, Playgrounds, Fairgrounds, and Wildlife Areas Within 900 Feet of the Preferred Alternative Alignment

Corridor	Alignment	Segment	Proximity and Distance from Centerline	Potential for Significant Impact
		BNSF Connection South to Merced	No 4(f) or 6(f) resources within 900 feet of the segment.	Not Applicable
		Merced South to Henry Miller Wye	< 450 feet -- Joe Herb Park	Medium
Station Location Options				
Transbay Transit Center		No 4(f) or 6(f) resources within 900 feet		Not Applicable
Millbrae/SFO				
Redwood City (Caltrain)				
Palo Alto (Caltrain)				
San Jose (Diridon)				
Gilroy (Caltrain)				
Modesto (Downtown)				
Merced (Downtown)				

Alignment

For the Caltrain Corridor, the Preferred Alternative Alignment contains a variety of Section 4(f) and 6(f) resources between San Francisco and Dumbarton, including approximately 18 local parks within 900 feet that could be affected. This alignment alternative could directly affect up to four Section 4(f) and 6(f) resources within 150 feet. From Dumbarton to San Jose, there are a variety of Section 4(f) and 6(f) resources, including approximately 12 regional and local parks within 900 feet of the HST alignment. Approximately six 4(f) resources adjacent to the corridor could be directly affected by the Dumbarton to San Jose alignment alternative. This alignment would be in the existing railroad corridor as it passes most of these resources between the cities of San Francisco and San Jose, and it is not likely to have a significant impact on 4(f) or 6(f) resources.

For the San Jose to Central Valley Corridor, approximately seven Section 4(f) and 6(f) resources are within 900 feet of the alignment between San Jose and the Central Valley floor. Three of the resources (Edenvale Garden and Coyote Creek parks north of Gilroy and the Upper Cottonwood Wildlife Area west of Interstate 5) could be directly affected by the HST because they are within 150 feet. There would be no impacts to nearby Henry Coe State Park because it is not within 900 feet of the alignment alternative, with State Route 152 acting as a barrier between the HST alignment and the park.

East of the San Luis Reservoir, there is one Section 4(f) resources (San Luis Wildlife Refuge and Los Banos Wildlife Area) along the Henry Miller alignment alternative that begins just north of the San Luis Reservoir and traverses east to the City of Merced. The proposed alignment alternative would pass north of the O'Neil Forebay Wildlife Area and continue north and parallel of Henry Miller Road, north of the City of Los Banos. There would be no impacts to Pacheco State Park, the San Luis Reservoir Wildlife Area, O'Neil Forebay Wildlife Area, the San Luis State Recreation Area, or the Lower Cottonwood Wildlife Area surrounding the San Luis Reservoir. The Volta Wildlife Area near Los

Banos would also not be impacted because the alignment alternative would be beyond 900 feet of the wildlife area's southern boundary.

For the Central Valley Corridor, there are approximately 13 Section 4(f) and 6(f) resources within 900 feet of the UPRR alignment. The alignment has the potential to directly affect five Section 4(f) and one Section 6(f) resources, including the Tuolumne Regional Park, County Park in Salida, the Stanislaus County Fairgrounds, and Broadway and Central Parks in Turlock. Five additional resources have the potential to be indirectly affected by the alignment alternative.

Stations

None of the stations are anticipated to have an impact on Section 4(f) or Section 6(f) resources within 900 feet of the sites.

This impact is considered significant at the program level.

Mitigation Strategies

The Authority finds that the following mitigation strategies can be refined and applied at the project-specific level to reduce these impacts:

1. Continue to apply design practices to avoid impacts to park resources, and when avoidance cannot be accommodated, minimize the scale of the impact.
2. Apply measures at the project level to reduce and minimize indirect/proximity impacts as appropriate for the particular sites affected, while avoiding other adverse impacts (e.g., visual), such as noise barriers, visual buffers, and landscaping.
3. Apply measures to modify access to/egress from the recreational resource to reduce impacts to these resources.
4. Design and construct cuts, fill, and aerial structures to avoid and minimize visual impacts to units of the state park system.
5. Incorporate wildlife under or over crossings at appropriate intervals as necessary.
6. Where public parklands acquired with public funds would be acquired for nonpark use as part of the HST system, commit as required by law to providing funds for the acquisition of substantially equivalent substitute parkland or to acquiring/providing substitute parkland of comparable characteristics.
7. Restore affected parklands to natural state and replace or restore affected park facilities.
8. If park facilities must be relocated, provide planning studies as well as appropriate design and replacement with minimal impact on park use.
9. Use local native plants for revegetation.
10. Develop and implement construction practices, including scheduling, to limit impacts to wildlife, wildlife corridors, and visitor use areas within public parks.
11. For temporary unavoidable loss of park and recreation facility uses, consider providing compensation.

The mitigation strategies described above would substantially lessen or avoid this impact; however, sufficient information is not available at the program level to conclude with certainty that mitigation would reduce this impact to a less-than-significant level in all circumstances. Therefore, at the programmatic level, the Authority finds that the potential for impacts to parks and recreational facilities remains significant even with application of mitigation strategies.

Planning efforts would be undertaken as a part of the project-level documentation phase to minimize harm to the Section 4(f) and 6(f) resources. This is anticipated to include measures that may be taken to mitigate potential adverse environmental impacts, such as beautification measures, replacement of land or structures or their equivalents on or near their existing site(s), tunneling, cut and cover, cut and fill, treatment of embankments, planting, screening, creating wildlife corridors, acquisition of land for preservation, installation of noise barriers, and establishment of pedestrian or bicycle paths. Other potential mitigation strategies could be identified during the project-level public review process.

4.16 Impacts to Freight Operations

In the San Franscisco to San Jose Corridor, there are 19 freight leads and spurs. It is the intent of the Authority that UPRR would retain its current trackage rights in this corridor, and that the future use of the spurs would not be precluded. In areas such as South San Francisco where it may be necessary to relocate the UPRR's yard operations, additional right-of-way outside of the existing Caltrain corridor may be required. It is intended that the current utility would be maintained for freight operations. UPRR rail spurs would most likely be reconfigured to remain within the existing Caltrain or UPRR right-of-way on the corridor. Minor additional strips of right-of-way may be required to accommodate the freight spur moves.

In the San Jose to Central Valley Corridor, ten spurs were identified in this corridor, all located between Diridon Station in San Jose and just south of Gilroy, near Carnadero Junction. The HST alignment would run west of the existing Caltrain/UPRR tracks to the Caltrain Tamien Station, and east of the existing tracks to Lick, in the Caltrain/PCJPB-owned right of way from Diridon Station to Lick. In crossing over freight and passenger tracks the HST would be on an aerial alignment with no interference to the existing tracks. At Lick, which is the beginning of the UPRR ownership of the right-of-way, the HST alignment would run adjacent to the east side of the UPRR right-of-way. This alignment would be on aerial structure to pass over a spur in Morgan Hill and three in Gilroy, but run at grade across one spur north of Gilroy, severing it from the UPRR.

In the Central Valley Corridor, the UPRR N/S alignment alternative, from Stockton to Fresno County would follow the UPRR and SR-99 for its entire distance. It would generally run at grade on the west side of the UPRR, but crosses to the east side near the junction with the line running east-west in Chowchilla. There are about 35 locations where a junction or spur leaves the UPRR mainline. In about half the cases, the HST alignment would run on the same side of the UPRR, but in Keyes, Turlock, Atwater, Chowchilla and Madera, the HST would be elevated to alleviate conflicts with the freight operations, leaving only spurs in French Camp (1), Ripon (2), Salida, Downtown Modesto (3), the junction with a branch line just south of Modesto, an industrial spur in south Chowchilla, north Madera and south of downtown Madera in conflict with the HST. The remaining half of the spurs and junctions would be on the opposite side of the UPRR mainline from the HST alignment. Figure 4-6 shows a silo served by a spur from the UPRR. The HST alignment would be elevated to pass over the spur, allowing uninterrupted access from the mainline to the facility.

Based on the CEQA thresholds of significance in the Revised Final Program EIR, the HST alignment alternatives are not expected to result in significant adverse effects to UPRR freight operations. At the program level, however, sufficient uncertainty exists about the precise design practices to avoid impacts and their effectiveness across all portions of the alignment alternatives that this impact must be considered potentially significant out of an abundance of caution.

Mitigation Strategies

The following mitigation strategies will ensure that the Authority avoids and/or minimizes creating impacts to UPRR freight operations:

- HST alignments will be designed so as not to be located on UPRR operating rights of way where feasible. HST alignments will be grade separated from UPRR rights-of-way at those locations where HST alignments would need to cross over or under UPRR operating rights-of-way.
- HST alignments will be designed to minimize impacts to existing UPRR business-serving spurs where feasible. The Authority will work with UPRR to identify those locations where design of the HST alignment may affect these business-serving spurs and evaluate with UPRR the following options, and other options that UPRR may present:
    - The HST alignment will be grade-separated (trench, tunnel, or aerial) from the UPRR spur.
    - If possible, the spur will be reconstructed so as to reduce or eliminate the impact of HST operations on existing freight service.
    - the Authority will negotiate with UPRR and consider such options as may be suggested by UPRR to accommodate individual freight customer needs.
- Construct grade separation in the form of an HST aerial flyover or underpass to preserve access to existing rail spurs and branch lines.
- Consolidate consecutive spur tracks that occur over a short distance to minimize the need for multiple grade separations.
- Relocate team tracks to the opposite side of the UPRR in locations where they conflict with HST.
- For silo or quarry operations, provide new loading/unloading facilities with augers and conveyors that pass over or under the HST alignment to a siding on the UPRR mainline that alleviates the need for a UPRR spur to cross the HST.
- To the extent possible, the schedule for construction will be coordinated with existing rail operators to minimize impacts to existing operations.

The Authority finds that the foregoing mitigation strategies will avoid or minimize adverse impacts to UPRR freight operations and that with mitigation, the impact is less than significant.

5 CUMULATIVE IMPACTS

Impact 1. Impacts on Traffic and Circulation and Travel Conditions

- Implementation of the HST system could lead to a considerable contribution to the cumulative impact related to surface streets leading to and from proposed HST stations.
- Mitigation strategies described in section 4.1, Traffic and Circulation, will reduce this impact.
- The Authority finds that the mitigation strategies will substantially lessen or avoid this impact; however, sufficient information is not available at the program-level to conclude with certainty that mitigation will reduce the HST system's contribution to this impact to less than cumulatively considerable in all circumstances. Therefore, for purposes of this programmatic EIR, the impact is considered cumulatively considerable.

Impact 2. Impacts on Air Quality

- Implementation of the HST system could lead to a considerable contribution to the cumulative impact related to air quality within the two air basins in the study area. Local adverse air quality impacts related to traffic could occur near HST stations.
- Mitigation strategies described in section 4.2, Air Quality, will reduce this impact.
- The Authority finds that the mitigation strategies will reduce the HST system's contribution to this impact to less than cumulatively considerable.

Impact 3. Impacts on Noise and Vibration

- Implementation of the HST system could lead to a considerable contribution to the cumulative impact related to noise and vibration.
- Mitigation strategies described in section 4.3, Noise and Vibration, will reduce this impact.
- The Authority finds that the mitigation strategies will reduce the HST system's contribution to these impacts to less than cumulatively considerable.

Impact 4. Energy Impacts

- Construction of the HST system potentially would represent a significant use of nonrenewable resources and could lead to a considerable contribution to a cumulative impact related to energy.
- Mitigation strategies described in section 4.4, Energy, will reduce this impact.
- The Authority finds that the mitigation strategies will reduce the HST system's contribution to these impacts to less than cumulatively considerable.

Impact 5. Land Use Impacts

- Implementation of the HST system could lead to a considerable contribution to the cumulative impact related to land use compatibility.
- Mitigation strategies described in section 4.6, Land Use, will reduce this impact.
- The Authority finds that the mitigation strategies will substantially lessen or avoid this impact; however, sufficient information is not available at the program-level to conclude with certainty that mitigation will reduce the HST system's contribution to this impact to less than cumulatively considerable in all circumstances. The Authority finds that to the extent that other projects

contribute to this impact they are within the purview of local government agencies to address with local planning and additional mitigation measures, but at the program level, such additional measures and the process for their implementation cannot be determined. Therefore, for purposes of this programmatic EIR, the impact is considered cumulatively considerable.

Impact 6. Impacts on Agricultural Lands

- Implementation of the HST system could lead to a considerable contribution to the cumulative impact related to the conversion of agricultural land to non-agricultural use and severance of agricultural land.
- Mitigation strategies described in section 4.7, Agricultural Lands, will reduce this impact.
- The Authority finds that the mitigation strategies will reduce the HST system's contribution to agricultural land conversion to less than cumulatively considerable. The Authority further finds that the mitigation strategies will substantially lessen or avoid severance impacts; however, sufficient information is not available at the program-level to conclude with certainty that mitigation will reduce the HST system's contribution to this impact to less than cumulatively considerable in all circumstances. Therefore, for purposes of this programmatic EIR, the agricultural land severance impact is considered cumulatively considerable.

Impact 7. Impacts on Aesthetics and Visual Resources

- Implementation of the HST system could lead to a considerable contribution to the short- and long-term cumulative impact related to visual resources (particularly scenic resources, areas of historical interest, natural open space areas, and significant ecological areas).
- Mitigation strategies described in section 4.8, Aesthetics and Visual Resources, will reduce this impact.
- The Authority finds that the mitigation strategies will avoid or substantially lessen impacts; however, because of the size of the project and absence of site-specific information related to the types of terrain affected and facilities design, sufficient information is not available at the program-level to conclude with certainty that mitigation will reduce the HST system's contribution to this impact to less than cumulatively considerable in all circumstances. Therefore, for purposes of this programmatic EIR, this impact is considered cumulatively considerable.

Impact 8. Impacts on Public Utilities

- Implementation of the HST system could lead to a considerable contribution to the cumulative impact related to public utilities and future land use opportunities because of right-of-way needs, extensive utility relocation, and property restrictions associated with construction of multiple linear facilities and other reasonably foreseeable future projects.
- Mitigation strategies described in section 4.9, Public Utilities, will reduce this impact.
- The Authority finds that the mitigation strategies will avoid or reduce the HST system's contribution to this impact to less than cumulatively considerable.

Impact 9. Impacts on Cultural and Paleontological Resources

- Implementation of the HST system could lead to a considerable contribution to the cumulative impact related to cultural and paleontological resources.
- Mitigation strategies described in section 4.11, Cultural and Paleontological Resources, will reduce this impact.

- The Authority finds that the mitigation strategies will substantially lessen or avoid this impact; however, sufficient information is not available at the program-level to conclude with certainty that mitigation will reduce the HST system's contribution to this impact to less than cumulatively considerable in all circumstances. Therefore, for purposes of this programmatic EIR, this impact is considered cumulatively considerable.

Impact 10. Impacts on Geology and Soils

- Implementation of the HST system could lead to a considerable contribution to the cumulative impact to geology and soils related to slope stability in various proposed locations of cut-and-fill and areas susceptible to slope failure; and subsidence if other projects under construction in the area also needed to dewater from the same drainage basin.
- Mitigation strategies described in section 4.12, Geology and Soils, will reduce this impact.
- The Authority finds that the foregoing mitigation strategies will reduce the HST system's contribution to this impact to less than cumulatively considerable.

Impact 11. Impacts on Hydrology and Water Resources

- Implementation of the HST system could lead to a considerable contribution to the cumulative impact related to hydrology and water resources.
- Mitigation strategies described in section 4.13, Hydrology and Water Resources, will reduce this impact.
- The Authority finds that the foregoing mitigation strategies will reduce the HST system's contribution to this impact to less than cumulatively considerable.

Impact 12. Impacts on Biological Resources and Wetlands

- Implementation of the HST Alternative could lead to a considerable contribution to the cumulative impact related to sensitive biological resources and wetlands.
- Mitigation strategies described in section 4.14, Biological Resources and Wetlands, will reduce this impact.
- The Authority finds that the mitigation strategies described above will substantially lessen or avoid this impact; however, sufficient information is not available at the program-level to conclude with certainty that mitigation will reduce the HST system's contribution to this impact to less than cumulatively considerable in all circumstances. Therefore, for purposes of this programmatic EIR, this impact is considered cumulatively considerable.

Impact 13. Impacts on Public Parks and Recreation Resources (Section 4(f) and 6(f) Resources)

- Implementation of the HST system could lead to a considerable contribution to the cumulative impact of indirect effects related to parklands and recreational resources.
- Mitigation strategies described in section 4.15, Public Parks and Recreation Resources, will reduce this impact.
- The Authority finds that the mitigation strategies will substantially lessen or avoid this impact; however, sufficient information is not available at the program-level to conclude with certainty that mitigation will reduce the HST system's contribution to this impact to less than cumulatively considerable in all circumstances. Therefore, for purposes of this programmatic EIR, this impact is considered cumulatively considerable.

Impact 14 Impacts to Freight Operations

- The HST system will be designed to avoid and minimize effects on UPRR freight operations.
- Mitigation strategies are described in section 4.16, Freight Operations, to avoid and minimize any impact.
- The Authority finds that the foregoing mitigation strategies will reduce the HST system's contribution to this impact to less than cumulatively considerable.

6 GROWTH-INDUCING IMPACTS

Transportation investments can lead to reduced travel time or cost, improved accessibility to regions or parts of regions, and reduced accidents or air pollution. These effects contribute to economic growth by allowing time and money previously spent on travel to be used for other purposes, attracting businesses and residents to places with increased accessibility or improved quality of life, and reducing overall costs to society. The population and employment growth that result from economic growth comprise the growth-inducing effects of transportation investments such as the HST system. This growth can contribute additional effects on human and natural resources beyond those directly attributable to the changes in the transportation system, which the EIR refers to as growth-related indirect impacts.

6.1 Growth-Inducing Effects of the HST System Alternative

The EIR's discussion of growth-inducing impacts was based the TREDIS[2] macroeconomic simulation model, which estimates the economic impact of transportation investments on business output, business attraction, employment, and population. Transportation demand, travel times and costs by mode were assembled by the newly developed California Statewide High-Speed Rail Travel Demand Model, with additional transportation performance information. The analytical process considered the potential effects that changes in transportation congestion and delay between existing conditions and future years would have on the state's economic growth. The process also modeled several dimensions of growth and spatial reallocation that could occur under and considered possible impacts of the proposed HST system on jobs, population, and land development.

The following summarizes the analysis in the Revised Final Program EIR:

- **Population Effects**: Statewide population is expected to grow by about 33% between 2005 and 2030 under the No Project Alternative. Compared to the No Project Alternative, population under the Preferred Pacheco Pass Network Alternative (statewide system) is projected grow by approximately an additional 1.4%. Within the 11 county core study area, population is expected to grow by 44% between 2005 and 2030 under the No Project Alternative and an additional 1.6% with the HST system. Compared to the No Project Alternative, the population growth rate equates to an additional 502,000 people with HST. The population growth with HST represents the increased accessibility provided by the transportation investment. An investment in HST is projected to lead to greater economic growth within the state and core study area than the No Project Alternative.
- **Employment Effects**: Statewide employment is expected to increase by about 37% between 2002 and 2030 under the No Project Alternative. Compared to the No Project Alternative, statewide employment growth is projected to be roughly 1.5% higher under the Preferred Pacheco Pass Network Alternative (statewide system). Within the 11 county core study area, employment is expected to grow by 37% between 2005 and 2030 under the No Project Alternative and an additional 2% with the HST system. Compared to the No Project Alternative, the employment growth rate equates to an additional 320,000 jobs with HST. Job growth with HST is expected in the FIRE (Finance, Insurance and Real Estate), services, TCU (transportation, communications, and utilities), wholesale trade, and retail trade categories. This is further broken out to job growth in the TCU and trade sectors in the Central Valley and in San Diego, and in the FIRE and services sectors in the "rest of California." The FIRE and services sectors tend to be the most compatible for location in higher density settings, such as near potential HST sites where offices and retail development could be expected.

[2] The Transportation Economic Development Impact System (TREDIS) model is designed specifically to evaluate the full economic development impacts of multimodal transportation investments. For this analysis, TREDIS was run in conjunction with the ReDYN economic modeling system to capture full dynamic economic feedback.

- **Urbanized and Non-urbanized Areas**: Urbanized areas in the core study area are expected to grow by about 40% between 2002 and 2030 under the No Project Alternative. This growth would represent an increase of about 400,000 acres over today's 1.0 million acres within the core analysis counties. Compared to urbanized area growth under the No Project Alternative, urbanized area growth is expected to be 0.9% (9,000 acres) higher under the Preferred Pacheco Pass Network Alternative. As with the population and employment growth, the level of difference for urbanized area size is small compared to the overall level of growth represented by the No Project Alternative relative to the 2002 existing conditions. Noticeable differences in these general patterns can be seen for Madera and Merced Counties, both of which are projected to have sizable urbanization increases with the HST system compared to the No Project Alternative.
- **Location of Growth**: The EIR provided county-level population growth rates for the No Project Alternative and the Preferred Pacheco Pass Network Alternative (statewide system). The results show that with the HST system, incremental population growth is highest in Madera County, followed by Merced County, San Diego County, and the Southern San Joaquin Valley; incremental growth rates are lowest in Southern California (except San Diego County) and areas from San Joaquin County northward. Incremental employment growth with HST is highest in Madera and Merced Counties, followed by Fresno and Stanislaus Counties and the Southern San Joaquin Valley. The incremental job growth in the Northern Central Valley region with the HST system is oriented much more heavily toward FIRE and services (about 62% of total), with trade, and TCU accounting for about 27% of incremental growth. This is the largest shift in the nature of employment for any region and suggests that the HST system could be a strong influence in attracting higher-wage jobs to the Central Valley. Taken together, these results suggest that additional population growth under the HST system is driven by internal job growth due to the initiation of HST service, rather than due to long-term population shifts from the Bay Area and Southern California based on long-distance commuting.

In summary, the Preferred Pacheco Pass Network Alternative would stimulate additional growth relative to the No Project Alternative in many Central Valley counties between Sacramento and Fresno. The incremental employment effect is much larger than the incremental population effect in all Central Valley counties, suggesting that the HST system might be more effective at distributing employment throughout the state. Also, this result suggests that the Preferred Pacheco Pass Network Alternative would not stimulate large shifts in residential location from the Bay Area into the Central Valley.

- **Effect of Authority Station Area Development Policies**: When making decisions regarding both the final selection of station locations and the timing of station development, the Authority would consider the extent to which appropriate Station Area Plans and development principles have been adopted by local authorities. In addition to potential benefits from minimizing land consumption needs for new growth, dense development near HST stations will concentrate activity in areas conveniently located near stations. This would increase the utilization of the HST system, generating additional HST ridership and revenue to benefit the entire state. Reducing the land needed for new growth should reduce pressure for new development on nearby habitat areas and agricultural lands.

Denser development allowances would also enhance joint development opportunities at and near the station, which in turn could increase the likelihood of private financial participation in construction related to the HST system. A dense development pattern can better support a comprehensive and extensive local transit and shuttle system, bike[3] and pedestrian paths, and related amenities that can serve the local communities as well as provide access and egress to HST stations. The Authority's adopted policies would ensure that implementation of the HST in California would maximize station

[3] HST will include facilities to accommodate bicycles.

area development that serves the local community and economy while increasing HST ridership. HST station area development principles draw upon transit-oriented development (TOD) strategies that have been successfully applied to focus compact growth within walking distance of rail stations and other transit facilities. Applying TOD measures around HST stations is a strategy that works for large, dense urban areas, as well as smaller central cities and suburban areas. TOD can produce a variety of other local and regional benefits by encouraging walkable, bikable compact and infill development. Local governments would play a significant role in implementing station area development by adopting plans, policies, zoning provisions, and incentives for higher densities, and by approving a mix of urban land uses. Almost all TOD measures adopted by public agencies involve some form of overlay zoning that designates a station area for development intensification, mixed land uses, and improvements to the pedestrian/bicycle environment. TOD measures are generally applied to areas within one-half mile of transit stations, and this principal would be followed for HST stations.

The responsibility and powers needed to focus growth and station area development guidelines in the areas around high-speed stations are likely to reside primarily with local government. The primary ways in which the Authority can help ensure that the HST system becomes an instrument for encouraging maximizing implementation of station area development principles include:

- Select station locations that are multi-modal transportation hubs with a preference for traditional city centers.
- Adopt HST station area development policies and principles that require TOD, and promote value-capture at and around station areas as a condition for selecting a HST station site.
- Provide incentives for local governments where potential HST stations may be located to prepare and adopt Station Area Plans and to amend City and County General Plans that incorporate station area development principles in the vicinity of HST stations.

Using the mitigation strategies listed under Impact 1 of Section 4.6 above, the Authority will work with local governments and local planning processes on these issues.

6.1.1 Indirect Effects Related to Growth from the HST Alternative

The Preferred Pacheco Pass Network Alternative may have a positive (i.e., result in an increase), but small, statewide effect on population and employment growth compared to the No Project Alternative. At the sub-state level, San Joaquin Valley counties are projected to experience population and employment growth rates that are noticeably higher than the statewide average. Despite the relatively small magnitude of the expected statewide growth, the growth could contribute to indirect impacts on the human and natural environment. Many of these indirect, growth-related impacts derive from increased urbanization needed to accommodate the additional population and employment. In 2030, the total size of urbanized areas in the study area would be virtually the same under the proposed Preferred Pacheco Pass Network Alternative as under the No Project Alternative, although the HST system will lead to increased urbanization in Fresno, Madera, Merced, and Santa Clara Counties. Much of the potential incremental growth associated with the HST system is likely to be focused around HST stations because these locations would receive the highest accessibility benefit with HST service.

The following summarizes the analysis in the 2008 Final Program EIR:

- No indirect, growth-related impacts from implementing the HST system are expected to the following resource areas: noise and vibration; exposure to EMF or EMI; public utilities; exposure to hazardous materials or wastes; cultural resources; geology and soils; and public parks and recreation. Indirect aesthetic impacts from induced growth under the Preferred Pacheco Pass Network Alternative are considered speculative at the programmatic level.

- Overall traffic conditions are expected to improve with the HST system, despite the estimated 1.2% increase in study area population and employment under the Preferred Pacheco Pass Network Alternative. Some increase in local traffic around urban HST stations, consistent with this increased growth, is expected to be concentrated.
- Air quality is expected to improve with the HST system, however, the increased population and employment growth may contribute to increased mobile-source air pollutants due to increased traffic around stations.
- There are no significant differences in energy consumption expected statewide between the Preferred Pacheco Pass Network Alternative and the No Project Alternative when considering growth. However, the HST system could result in less overall demand for transportation energy, despite the expected small increase in growth with the HST system. The potential increased density in the vicinity of proposed HST station sites would limit the amount of energy required for construction of and access to future infrastructure projects, reduce demand for large-volume transportation-related infrastructure projects, and result in savings in building-related energy use. The projected population and employment distributive effect of the project could create the need for some change in the incremental development of overall energy and electricity generation and/or transmission capacity among regions and potentially require development of more incremental production and/or transmission capacity.
- Socioeconomic changes from growth under the Preferred Pacheco Pass Network Alternative are expected to be small, and therefore indirect land use compatibility impacts from induced growth are also expected to be small. Growth associated with the HST system would be distributed across various communities, would be reflected in infill development and increased development densities around stations, and is not expected to result in a significant increase in demand for municipal services. Planning for such services is within the purview of local and regional agencies and expected growth in the future would be within typical planning horizons for such services.
- Growth under the Preferred Pacheco Pass Network Alternative is expected to impact 6,000 acres, or about 3%, more of important farmland within the 11 county study area than the No Project Alternative due to urbanization. Within the study area, projected farmland losses beyond the No Project Alternative would include 3,500 acres of prime farmland, 800 acres of farmland of statewide importance, 1,300 acres of unique farmland, and 500 acres of farmland of local importance.
- Growth under the Preferred Pacheco Pass Network Alternative is expected to impact about 22 miles more of waterways within the 11 county study area than the No Project Alternative, or about 2% more. The largest percentage of this increase is expected to occur in Merced and Fresno counties.
- Growth under the Preferred Pacheco Pass Network Alternative has the potential to affect up to 2,600 acres more of land which may contain some threatened and endangered species habitat within the 11 county study area than the No Project Alternative. The largest percentage increase is expected to occur in the Bay Area, about 4% or 1,300 acres. Growth with the project has the potential to affect about 72 acres more of areas containing wetlands than the No Project Alternative, or less than 1% more. The largest acreage and percentage increase, 49 acres, is projected to occur in the Bay Area due to future urbanization.
- At the program level it is not possible to predict the specific location(s) where the increment of future growth related to the Preferred Pacheco Pass Network Alternative may occur or is likely to occur in order to recommend mitigation strategies to other agencies; nor is it within the purview of the Authority to adopt such strategies. Additionally, the size, scope and attributes of specific projects that may be proposed in the future cannot be predicted, nor can the outcome of public agency approval processes and the ultimate configuration of any approved projects be predicted. However, in addition to the general and specific plans adopted by local governments which address community and growth expectations, the general requirements of CEQA, the Endangered

Species Act, other measures required by the Department of Fish and Game and the permit requirements of other regulatory agencies can be expected to apply to both public and private projects in the future and to require avoidance and minimization strategies to reduce potentially significant impacts to environmental resources. These strategies can be expected to substantially reduce and avoid adverse environmental impacts to these resources.

7 FINDINGS ON RIDERSHIP FORECASTS AND THE NEED FOR FURTHER REVISION AND RECIRCULATION OF THE PROGRAM EIR

The Revised Final Program EIR impacts analysis is based on forecasts of ridership that were developed by Cambridge Systematics, under contract to the Metropolitan Transportation Commission, between 2005 and 2007. General information about ridership forecasts was included in the 2007 Draft Program EIR, with references to more detailed reports describing development of the ridership and revenue forecasting model (ridership model), data collection efforts, peer review, and model estimation, calibration, and validation. Comments regarding the ridership model were responded to in the 2008 Final Program EIR.

While the Authority has been in the process of complying with the final judgment in the *Town of Atherton* litigation, questions have arisen about the ridership model and the resulting ridership forecasts. The Authority received many comments on the 2010 Revised Draft Program EIR asserting that the model was flawed. Some comments asserted that the ridership model was improperly manipulated and concealed from the public. Other comments suggested the Authority was required to revise the ridership model, prepare new forecasts, and further revise and recirculate its Program EIR.

At the request of the California Senate Transportation and Housing Committee, the Authority commissioned a review of the ridership model from U.C. Berkeley, Institute for Transportation Studies (ITS). In June 2010, the Authority received a final written critique of the ridership model by U.C. Berkeley ITS. The Authority has also received a written response by Cambridge Systematics, and input from the Metropolitan Transportation Commission. At its July 2010 Board Meeting, the Authority received a presentation on the U.C. Berkeley ridership critique from Professor David Brownstone, and a response by Dr. Lance Neumann and Dr. Kimon Proussaloglou of Cambridge Systematics. The Authority also received numerous public comments on the ridership model and forecasts from members of the public.

Based on the various issues that have been raised by members of the public and U.C. Berkeley ITS related to the ridership model and the resulting forecasts used in the Revised Final Program EIR, the Authority makes the following factual findings:

- The ridership model was developed through a process that incorporated expert peer review at three different stages between 2005 and 2007.
- The ridership model was developed using a process of model estimation, calibration, and validation that represents a standard practice in the industry.
- The final ridership model was used consistently to prepare all ridership forecasts utilized for the Program EIR.
- The development of the ridership model and the resulting forecasts were discussed in the 2007 and 2008 Draft and Final Program EIRs for the Bay Area to Central Valley High-Speed Train.
- The Program EIR has used the ridership forecasts for environmental assessment purposes, including a low forecast to evaluate project benefits and a high forecast to evaluate project impacts.
- Background reports about the ridership model and forecasts have been available on the Authority's website since 2007.
- The ridership model has been publicly available through the Metropolitan Transportation Commission.
- There are points of disagreement between Cambridge Systematics and U.C. Berkeley ITS regarding various aspects of the ridership model.

- U.C. Berkeley ITS's final conclusion is that the ridership model is unreliable for policy analysis. (Final Report, p. 2.)
- U.C. Berkeley stated that, based on certain problems it identified with the model, "the forecasts of high speed rail demand – and hence of the profitability of the proposed high speed rail system - have very large error bounds." (Final Report, p. 3.)
- U.C. Berkeley stated, "we believe that further work to both assess and reduce these bounds should be a high priority." (Final Report, p. 3.)
- U.C. Berkeley ITS stated that the type of information regarding "error bands" that it recommends be part of the ridership forecasts is not standard practice in the industry.
- U.C. Berkeley ITS identified an error in the process used by Cambridge Systematics for estimation and calibration based on papers published in 2008, after the ridership study was completed. (Final Report, pp.7-8.)
- Cambridge Systematics affirmed that the estimation and calibration process they used remains state of the practice.
- In its review of the model, U.C. Berkeley ITS originally identified 30 issues for Cambridge Systematics to respond to, and its final report focused on 7 issues. (Final Report and appendices.)
- UC Berkeley ITS stated, "we are, for the most part, satisified with their responses and agree that their work on this project meets generally accepted standards for travel demand modeling. We are, however, concerned about the impact of some of Cambridge Systematics' modeling decisions on the reliability of the forecasts based upon these models." (Final Report, p. 5.)
- U.C. Berkeley ITS identified Cambridge Systematics as one of the best firms in the business.
- U.C. Berkeley ITS found no indication of bias or rigging of the ridership model or the forecasts.
- Cambridge Systematics has provided a thorough response to each of the technical issues raised in the U.C. Berkeley ITS Final Report.
- The Metropolitan Transportation Commission has affirmed its view that the ridership model served as an appropriate tool for the statewide and regional planning purposes for which it was developed, including MTC's own regional rail planning process.
- The Authority is faced with a difference of opinion between the authors of the U.C. Berkeley ITS report, who are academicians, and Cambridge Systematics, a leader in the field of transportation demand modeling with extensive experience working with public agencies.
- Cambridge Systematics, has more than 30 years of experience developing travel demand models for use at the local, regional, state, and national levels, including: statewide models for Indiana, Massachusetts, Florida, Wisconsin, New Mexico, New Hampshire, Georgia, as well as California; interegional models for the Colonia Bridge linking Argentina and Uruguay, and for the Illiana corridor linking Illinois and Indiana; and a national model in Italy to estimate high speed rail forecasts for the Torino-Milano-Napoli corridor proposal.

Based on the foregoing findings of fact, the Authority further finds that the ridership model and the resulting forecasts used in the Program EIR have been and continue to be appropriate for the broad, programmatic level of planning and environmental review for which they are being used in the Revised Final Program EIR.

The Authority also finds that there is no basis to further revise and recirculate the Revised Final Program EIR because the information about the ridership model reflected in the Revised Final Program EIR does not constitute significant new information as that term is used in Public Resources Code section 21092.1 or CEQA Guidelines section 15088.5.

8 FEASIBILITY OF POTENTIAL ALTERNATIVES

The Revised Final Program EIR describes and analyzes the network alternatives, alignment alternatives, and station location options considered for the proposed HST system in the Bay Area to Central Valley study region. Because the Revised Final Program EIR builds from the Authority's prior Program EIR/EIS for the statewide HST system, the alternatives analysis does not revisit the Authority's prior decisions based on the prior EIR/EIS: (1) the decision to proceed with a statewide HST system; (2) decisions regarding HST system capabilities and technology; and (3) decisions regarding preferred alignments and station location options for geographic regions other than the Bay Area to Central Valley. (See § 2.3.2 of Bay Area to Central Valley 2008 Final Program EIR.) The analysis instead focuses on the more narrow choices of an overall network to connect the Bay Area to the Central Valley, and preferred alignment alternatives and station locations for the overall network.

The Revised Final Program EIR and these findings conclude that the Preferred Pacheco Pass Network Alternative will have some significant adverse environmental impacts that cannot be avoided or substantially lessened with mitigation strategies. The following findings on alternatives explain why the alternatives not carried forward for evaluation and/or the alternatives studied but not selected are either: (1) infeasible, as defined in CEQA and the CEQA Guidelines; (2) not environmentally superior; or (3) fail to adequately meet the project purpose and project objectives. These findings also explain why the Preferred Pacheco Pass Network Alternative qualifies as the environmentally superior alternative as a whole.

8.1 Findings on Alternatives Considered but Not Carried Forward for Detailed Study in the Program EIR/EIS

The Authority and FRA conducted a screening evaluation process to identify potential alignment alternatives and station location options that were anticipated to be practicable, reasonable, and feasible for further consideration in the Bay Area to Central Valley Program EIR/EIS. The process incorporated the standardized criteria described in section 2.5.1 of the 2008 Final Program EIR: construction; environment; land use compatibility; right-of-way; connectivity/accessibility; and ridership/revenue. The objectives identified in Table 2.5-2 of the 2008 Final Program EIR also contributed to the evaluation process. The Bay Area to Central Valley study region was divided into six (6) corridors to facilitate the process: San Francisco to San Jose; Oakland to San Jose; San Jose to Central Valley; East Bay to Central Valley; San Francisco Bay Crossings; and Central Valley

The alternatives screening evaluation involved numerous steps and considerable consultation with other agencies and the public:

- Review of past alignment and station location options identified with viable corridors from previous studies, including the Statewide Program EIR/EIS
- Identification through the environmental scooping process of alignment alternatives and station location options not previously evaluation
- Evaluation of potential alignment alternatives and station location options using standardized engineering, environmental, and financial criteria and evaluation methodologies at a consistent level of analysis
- Identification of the ability of alignment alternatives and station location options to meet the defined project objectives.

The Authority received information on alignment alternatives and station location options to be eliminated from further consideration at its meetings on March 22, 2006, and on August 9, 2006.

Based on the alternatives screening evaluation process, the Authority finds that the potential alignment alternatives and station location options identified in Table 2.5-4 of the 2008 Final Program EIR were appropriately eliminated from detailed study for the reasons briefly explained in section 2.5.1 and Table 2.5-4 of the 2008 Final Program EIR, and as explained in more detail in Appendix 2-G of the 2008 Final Program EIR. The Authority finds that the potential alignment alternatives and station location options eliminated from detailed study are infeasible because:

- they fail to adequately meet the project purpose and objectives;
- they are impracticable in terms of cost, constructability, right-of-way constraints, and other technical/engineering issues;
- they include greater or more probably adverse environmental impacts than other practicable alternatives;
- The Authority therefore finds that the potential alignment alternatives and station location options identified in Table 2.5-4 of the 2008 Final Program EIR are not feasible alternatives that would avoid or minimize the significant and unavoidable environmental impacts of the Preferred Pacheco Pass Network Alternative and it component parts.

8.2 Findings on Alternatives Studied in the Program EIR/EIS

The alternatives screening evaluation process resulted in a series of alignment alternatives and station location options that were studied in detail in the Program EIR. The alternatives are identified in the 2008 Final Program EIR at Table 2.5-3, shown on Figure 2.5-2, and described in section 2.5.1.A. The alignment alternatives for the six study corridors were combined into three basic conceptual approaches or networks for connecting the Bay Area to the Central Valley for the HST system, with variations among them that result in a total of 21 representative network alternatives evaluated in the Program EIR:

- Altamont Pass (11 network alternatives)
- Pacheco Pass (6 network alternatives)
- Pacheco Pass with Altamont Pass [local service] (4 network alternatives)

The 2008 Final Program EIR assessed the impacts of each alignment alternative and each station location option in Chapter 3, and summarized the impacts for the 21 representative network alternatives (combinations of alignment alternatives and station location options) in Chapter 7. Maps of the representative network alternatives are included in Chapter 7. Revisions to this information are included in Volume 1 of the Revised Final Program EIR, Chapter 6.

Overall, implementing the HST system would greatly increase the capacity for intercity and commuter travel and reduce existing automobile traffic in specific travel corridors. Full grade-separation along Bay Area rail corridors used by the HST would improve local traffic flow and reduce air pollution at existing rail crossings. The more extensive the HST system implemented in the Bay Area, the greater the travel condition benefits, including increased connectivity to other transit systems, increased convenience, increased reliability, and improved travel times. In particular, more direct connections to the region's airports provide increased connectivity for air transportation system riders.

Recognizing the benefits described above, as well as other attributes, the cities of San Francisco, Oakland, and San Jose all strongly support direct HST service to their respective downtowns. This support was expressed as comments on the 2007 Draft Program EIR, and is consistent with comments/input provided by these cities over the ten years since the Authority was created. The Metropolitan Transportation Commission (MTC), the regional transportation planning and programming agency for the Bay Area, supports direct HST service to the downtowns of each of these three major Bay Area urban centers.

A number of network alternatives clearly do not fully meet the purpose and need for the HST system. The Altamont Pass network alternative that terminates in Union City meets the project purpose and need less well since it does not provide direct HST service to San Francisco, Oakland, or San Jose (the major Bay Area cities) nor does it provide interface with the major commercial airports. The same is true for the Pacheco Pass network alternative that terminates in San Jose and three Altamont Pass network alternatives that only serve one of the three major urban areas/centers. These four alternatives directly provide HST service to at most only one major Bay Area city and one of the region's major commercial airports.

8.2.1 Findings on the No Project Alternative

The Authority made a previous finding as part of the Program EIR/EIS for the Statewide HST system that the HST system would offer significant environmental benefits over the No Project Alternative evaluated at the year 2020 when viewed from a system-wide basis, including reduced highway VMT, improved air quality, and improved efficiency of transportation energy use for the HST system, compared to increased highway VMT, more traffic congestion, deteriorating air quality, and reduced transportation energy efficiency for No Project. (Resolution No. 05-01, Exhibit A, pp. 64-65.) The Authority also found that while the No Project Alternative statewide would result in adverse environmental impacts, it would not offer the benefits of the HST system for the environment or the State's economy. (*Ibid.*) The Authority therefore rejected the No Project Alternative in 2005 when it selected the HST system. (*Ibid.*)

The Bay Area to Central Valley Revised Final Program EIR(including the full text of the 2008 Final Program EIR) evaluates the various network alternatives against the No Project Alternative at year 2030, based on CEQA requirements to consider a no project alternative. (CEQA Guidelines, § 15126.6, subd. (e)). Considering the updated ridership forecasts developed for this Program EIR, the Authority finds that the HST system statewide, as well as within the Bay Area to Central Valley study region, offers environmental benefits in the area of traffic, air quality, and energy use, whereas the No Project Alternative would result in increased traffic congestion, deteriorating air quality, and reduced transportation energy efficiency. The Authority also finds that the Preferred Pacheco Pass Network Alternative has the benefit of minimizing land consumption needs by promoting dense development near HST stations, and providing permanent protection for agricultural lands, open space, and wildlife habitat through mitigation in the form of conservation easements that would not be available with certainty under the No Project Alternative. For these reasons, the Authority finds that the No Project Alternative, when viewed for all of its adverse impacts, is an infeasible alternative for avoiding or substantially lessening the significant unavoidable impacts of the Preferred Pacheco Pass Network Alternative

The Authority further finds that, in the context of the Authority's prior decision to proceed with a Statewide HST System, the No Project Alternative is not a feasible alternative for purposes of the Bay Area to Central Valley study region because it would not meet the project objectives or underlying project purpose.

8.2.2 Findings on Rejected Altamont Pass Network Alternatives

The Revised Final Program EIR considered eleven representative Altamont Pass network alternatives. These 11 alternatives encompass the range of different ways to combine HST alignment alternatives and station location options to implement the HST system via the Altamont Pass.

The Authority finds that there are constructability issues and logistical constraints for all HST alternatives. However, the Authority also finds that construction related issues and logistical constraints associated with the Altamont Pass alternatives are greater than those for the Pacheco Pass alternatives. All Altamont Pass alternatives have considerable constructability issues through the right-of-way constrained Tri-Valley area (Livermore and Pleasanton) and tunneling/seismic issues in the Pleasanton Ridge/Niles Canyon area. All Altamont Pass alternatives have tunneling/seismic issues (Calaveras Fault) in the Pleasanton Ridge as well as seismic issues in the East Bay (Hayward Fault). For direct service to San

Francisco, the most promising Altamont Pass alternatives require a new San Francisco Bay crossing at Dumbarton, which must also go through the Don Edwards San Francisco Bay National Wildlife Refuge and the City of Fremont (which opposes construction of the east-west link through Fremont). For the Altamont Pass alternative serving Oakland, the MTC concluded that "development of an East Bay option with direct service to San Jose and Oakland would include significant right-of-way risk gaining an agreement from UPRR to provide access to Oakland." This conclusion is supported by written comments received from UPRR. For the Altamont Pass East Bay link to San Jose, Caltrans District 4 has commented that use of the I-880 median would result in significant construction stage impacts between Fremont and San Jose.

ALTAMONT PASS NETWORK ALTERNATIVE WITH SAN FRANCISCO AND SAN JOSE TERMINI (DUMBARTON CROSSING)

The Revised Final Program EIR evaluated an Altamont Pass Network Alternative with San Francisco and San Jose Termini. This network alternative is shown in Figure 7.2-1 and described in Table 7.2-1 of the 2008 Final Program EIR, volume 1 and the Revised Final Program EIR, volume 1.

The Authority finds that this alternative involves greater overall environmental impacts than the Preferred Pacheco Pass Network Alternative. This alternative involves constructing a new bridge or tube along the Dumbarton corridor across San Francisco Bay. This would involve major construction activities in sensitive wetlands, saltwater marshes, and aquatic habitat requiring special construction methods and mitigations. This alternative would also result in direct and indirect impacts to San Francisco Bay and the Don Edwards San Francisco Bay National Wildlife Refuge that would not occur with the Preferred Pacheco Pass Network Alternative.

The Authority further finds that the extensive agency coordination and permitting necessary to implement an alternative that includes a Dumbarton Bridge crossing (i.e., coordination/permitting with USACE, USFWS, California Coastal Commission, CDFG, and Bay Conservation and Development Commission [BCDC]) has the potential to create further costs, time delays, and other constructability issues. Scoping comments from the Bay Conservation and Development Commission noted that bridge alternatives that could have adverse impacts on Bay resources can only be approved by BCDC "if there is not an alternative upland location for the route and if the fill is the minimum necessary to achieve the purposes of the project" (BCDC scoping response, December 15, 2005). The Authority finds that these considerations render the alternative infeasible.

The MTC noted that there are right-of-way constraints within I-880. The East Bay segment south of Fremont would need to be constructed along I-880 south of Mission Boulevard towards San Jose with the potential for a long process with Caltrans to define and construct the elevated HST within the freeway right-of-way. Caltrans has serious concerns about construction within the constrained median. In addition, the Tri-Valley PAC raised concerns regarding land use compatibility and right-of-way constraints and the need for aerial structures through the Tri-Valley. The cities of Fremont and Pleasanton (part of all Altamont Pass network alternatives) oppose Altamont Pass alternatives.

For these reasons, the Authority finds that this alternative is not a feasible alternative that would substantially lessen the significant environmental impacts of the Preferred Pacheco Pass Network Alternative.

ALTAMONT PASS NETWORK ALTERNATIVE WITH OAKLAND AND SAN JOSE TERMINI

The Revised Final Program EIR evaluated an Altamont Pass Network Alternative with Oakland and San Jose Termini. This network alternative is shown in Figure 7.2-2 and described in Table 7.2-2 of the 2008 Final Program EIR, volume 1, and the Revised Final Program EIR, volume 1.

The Authority finds that this alternative involves considerable logistical constraints along the East Bay that render it infeasible. In its adopted Regional Rail Plan for the San Francisco Bay Area, the MTC raised certain issues associated with an East Bay HST alignment and did not recommend an East Bay alignment. The Authority and FRA examined these and other issues and concurred with MTC's evaluation.

- Right-of-Way Constraints and Duplicate Investment – Commitments have already been made to improve Capitol Corridor service and to extend BART to San Jose but these improvements would not be compatible with HST service, which would need to use separate tracks. Non-electric, conventional Capitol Corridor trains will continue to share track with standard freight services in the constrained UPRR owned right-of-way. When fully developed, BART and Capitol Corridor will provide complementary rail options with BART serving more local stops and Capitol Corridor primarily serving regional stops. The capital cost of the East Bay line segment is approximately $4.9 billion.
- Risk of UPRR Right-of-Way Agreement – The risk of reaching an agreement from UPRR to obtain the right to construct additional tracks for the HST along the constrained Niles Subdivision where the high-speed alignment is proposed between Mission Boulevard and Oakland remains high.
- Potential Environmental Justice Concerns – The environmental screening in the MTC Regional Rail Plan indicated potential concerns with construction of a new elevated alignment though existing urbanized areas especially in the East Bay between Fremont and Oakland.
- Right-of-Way Constraints within I-880 – The East Bay alignment segment south of Fremont would need to be constructed along I-880 freeway south of Mission Boulevard towards San Jose with the potential for a long process with Caltrans to define and construct the elevated HST trackway within the freeway right-of-way. Caltrans has serious concerns about construction within the constrained median.

The Tri-Valley Policy Advisory Committee (PAC) raised serious concerns regarding land use compatibility and right-of-way constraints and the need for aerial structures through the Tri-Valley. The cities of Fremont and Pleasanton (part of all Altamont Pass network alternatives) oppose Altamont Pass alternatives.

The Authority finds that this alternative would be less capable of meeting the project purpose and project objectives because it does not provide direct HST service to SFO (northern California's major hub airport), the San Francisco Peninsula (Caltrain Corridor), and downtown San Francisco, the major transit, business, and tourism center of the region.

For these reasons, the Authority finds that this alternative is not a feasible alternative that would substantially lessen the significant environmental impacts of the Preferred Pacheco Pass Network Alternative.

ALTAMONT PASS NETWORK ALTERNATIVE WITH SAN FRANCISCO, OAKLAND, AND SAN JOSE TERMINI (DUMBARTON CROSSING)

The Revised Final Program EIR evaluated alignment alternatives and station location options for an Altamont Pass Network Alternative with San Francisco, Oakland and San Jose Termini. This network alternative is shown in Figure 7.2-3 and described in Table 7.2-3 of the 2008 Final Program EIR, volume 1, and Chapter 6 in the Revised Final Program EIR, volume 1.

The Authority finds this alternative has greater environmental impacts than the Preferred Pacheco Pass Network Alternative because it would require nearly 38 additional miles of HST alignment along the East Bay and includes a Dumbarton Bridge crossing.

The Authority also finds that this alternative is economically infeasible in that it has greater costs (estimated at $2.5 billion more than the Preferred Pacheco Pass Network Alternative) due to the 38 additional miles of HST alignment in the East Bay.

The Authority finds that the extensive agency coordination and permitting necessary to implement an alternative that includes Dumbarton Bridge crossing (i.e., coordination/permitting with USACE, USFWS, California Coastal Commission, CDFG, and BCDC) has the potential to create further costs, time delays, and other constructability issues. The BCDC also noted that bridge alternatives that could have adverse impacts on Bay resources can only be approved if there is not an alternative upland location. The Authority finds that these considerations render the alternative infeasible.

The Authority further finds that this alternative presents logistical constraints that render it infeasible. This includes the concerns raised by the MTC associated with an East Bay HST alignment: right-of-way constraints and duplicate investment between Oakland and San Jose, risk of reaching agreement with UPRR along the Niles Subdivision, potential Environmental Justice concerns through existing urbanized areas in the East Bay, and right-of-way constraints within I-880 south of Fremont that could result in a long process with Caltrans. The Tri-Valley PAC also raised concerns regarding land use compatibility and right-of-way constraints and the need for aerial structures through the Tri-Valley. In addition, the cities of Fremont and Pleasanton oppose Altamont Pass alignments.

The Authority further finds that this alternative would be less capable of meeting the project purpose and need and project objectives due to the further split of the frequency of the HST services (express, suburban express, skip-stop, local, and regional) between San Francisco, San Jose, and Oakland (a three way split east of Niles Junction), which results in somewhat less ridership and revenue projected for this alternative as compared to the Preferred Pacheco Pass Network Alternative.

For these reasons, the Authority finds that this alternative is not a feasible alternative that would substantially lessen the significant environmental impacts of the Preferred Pacheco Pass Network Alternative.

ALTAMONT PASS NETWORK ALTERNATIVE WITH SAN JOSE TERMINUS

The Revised Final Program EIR evaluated alignment alternatives and station location options for an Altamont Pass Network Alternative with San Jose Terminus. This network alternative is shown in Figure 7.2-4 and described in Table 7.2-4 of the 2008 Final Program EIR, volume 1, and Chapter 6 of the Revised Final Program EIR, volume 1.

The Authority finds that this alternative fails to adequately meet the underling purpose and primary project objectives because it would service only one of the three major urban centers of the Bay Area (San Jose) and only one of the region's major commercial airports. For this reason, the Authority finds that this alternative is not a feasible alternative for substantially lessening the significant environmental impacts of the Preferred Pacheco Pass Network Alternative.

ALTAMONT PASS NETWORK ALTERNATIVE WITH SAN FRANCISCO TERMINUS

The Revised Final Program EIR evaluated alignment alternatives and station location options for an Altamont Pass Network Alternative with San Francisco Terminus. This network alternative is shown in Figure 7.2-5 and described in Table 7.2-5 of the 2008 Final Program EIR, volume 1, and Chapter 6 of the Revised Final Program EIR, volume 1.

The Authority finds that this alternative fails to adequately meet the underlying purpose and primary project objectives because it would service only one of the three major urban centers of the Bay Area (San Francisco) and only one of the region's major commercial airports. For this reason, the

Authority finds that this alternative is not a feasible alternative for substantially lessening the significant environmental impacts of the Preferred Pacheco Pass Network Alternative.

ALTAMONT PASS NETWORK ALTERNATIVE WITH OAKLAND TERMINUS

The Revised Final Program EIR evaluated alignment alternatives and station location options for an Altamont Pass Network Alternative with Oakland Terminus. This network alternative is shown in Figure 7.2-6 and described in Table 7.2-6 of the 2008 Final Program EIR, volume 1, and Chapter 6 of the Revised Final Program EIR, volume 1.

The Authority finds that this alternative fails to adequately meet the underlying purpose and primary project objectives because it would service only one of the three major urban centers of the Bay Area (Oakland) and only one of the region's major commercial airports. For this reason, the Authority finds that this alternative is not a feasible alternative for substantially lessening the significant environmental impacts of the Preferred Pacheco Pass Network Alternative.

ALTAMONT PASS NETWORK ALTERNATIVE WITH UNION CITY TERMINUS

The Revised Final Program EIR evaluated alignment alternatives and station location options for an Altamont Pass Network Alternative with Union City Terminus. This network alternative is shown in Figure 7.2-7 and described in Table 7.2-7 of the 2008 Final Program EIR, volume 1, and Chapter 6 of the Revised Final Program EIR, volume 1. The Authority finds that this alternative fails to adequately meet the underlying purpose and project objectives because it would not service any of the three major urban centers of the Bay Area and none of the region's major commercial airports. For this reason, the Authority finds that this alternative is not a feasible alternative for substantially lessening the significant environmental impacts of the Preferred Pacheco Pass Network Alternative.

ALTAMONT PASS NETWORK ALTERNATIVE WITH SAN FRANCISCO AND SAN JOSE TERMINI VIA THE SAN FRANCISCO PENINSULA

The Revised Final Program EIR evaluated alignment alternatives and station location options for an Altamont Pass Network Alternative with San Francisco and San Jose Termini via the San Francisco Peninsula. This network alternative is shown in Figure 7.2-8 and described in Table 7.2-8 of the 2008 Final Program EIR, volume 1, and Chapter 6 in the Revised Final Program EIR, volume 1.

The Authority finds that this alternative involves greater overall environmental impacts than the Preferred Pacheco Pass Network Alternative. This alternative involves constructing a new bridge or tube along the Dumbarton corridor. This would involve major construction activities in sensitive wetlands, saltwater marshes, and aquatic habitat requiring special construction methods and mitigations. This alternative would also result in direct and indirect impacts to San Francisco Bay and the Don Edwards San Francisco Bay National Wildlife Refuge that would not occur with the Preferred Pacheco Pass Network Alternative.

The Authority further finds that the extensive agency coordination and permitting necessary to implement an alternative that includes a Dumbarton Bridge crossing (i.e., coordination/permitting with USACE, USFWS, California Coastal Commission, CDFG, and BCDC) has the potential to create further costs, time delays, and other constructability issues. The Tri-Valley PAC also raised concerns regarding land use compatibility and right-of-way constraints and the need for aerial structures through the Tri-Valley. In addition, the cities of Fremont and Pleasanton oppose Altamont Pass alignments. The Authority finds that these considerations render the alternative infeasible.

For these reasons, the Authority finds that this alternative is not a feasible alternative for substantially lessening the significant environmental impacts of the Preferred Pacheco Pass Network Alternative.

ALTAMONT PASS NETWORK ALTERNATIVE WITH SAN FRANCISCO, SAN JOSE, AND OAKLAND TERMINI WITH NO SAN FRANCISCO BAY CROSSING

The Revised Final Program EIR evaluated alignment alternatives and station location options for an Altamont Pass Network Alternative with San Francisco, San Jose, and Oakland Termini with no San Francisco Bay Crossing. This network alternative is shown in Figure 7.2-9 and described in Table 7.2-9 of the 2008 Final Program EIR, volume 1, and Chapter 6 of the Revised Final Program EIR, volume 1.

The Authority finds that this alternative has greater environmental impacts than the Preferred Pacheco Pass Network Alternative with San Francisco and San Jose Termini because it would require nearly 62 additional miles of HST alignment along the San Francisco Peninsula. The Authority also finds that this alternative is economically infeasible in that it has greater costs (estimated at $1.95 billion more than the preferred alternative) due to the 62 additional miles of HST alignment in the San Francisco Peninsula. The segment from San Jose to San Francisco would cost about $72.6 million/mile to construct ($59.2 million/mile for network alternative), yet this alternative results in non-competitive travel times from San Francisco, SFO, or Palo Alto/Redwood City to the HST stations to the south including Bakersfield, Los Angeles, Anaheim, Riverside, and San Diego. The non-competitive travel times to San Francisco and the San Francisco Peninsula resulted in less projected ridership and revenue.

The Authority further finds that this alternative presents logistical constraints that render it infeasible. This includes the concerns raised by the MTC associated with an East Bay HST alignment: right-of-way constraints and duplicate investment between Oakland and San Jose, risk of reaching agreement with UPRR along the Niles Subdivision, potential Environmental Justice concerns through existing urbanized areas in the East Bay, and right-of-way constraints within I-880 south of Fremont that could result in a long process with Caltrans. The Tri-Valley PAC also raised concerns regarding land use compatibility and right-of-way constraints and the need for aerial structures through the Tri-Valley. In addition, the cities of Fremont and Pleasanton oppose Altamont Pass alignments. The Authority finds that these considerations render the alternative infeasible.

For these reasons, the Authority finds that this alternative is not a feasible alternative for substantially lessening the significant environmental impacts of the Preferred Pacheco Pass Network Alternative.

ALTAMONT PASS NETWORK ALTERNATIVE WITH OAKLAND AND SAN FRANCISCO TERMINI VIA A TRANSBAY TUBE

The Revised Final Program EIR evaluated alignment alternatives and station location options for an Altamont Pass Network Alternative with Oakland and San Francisco Termini via a Transbay Tube. This network alternative is shown in Figure 7.2-10 and described in Table 7.2-10 of the 2008 Final Program EIR, volume 1, and Chapter 6 of the Revised Final Program EIR, volume 1.

The Authority finds that this alternative has greater environmental impacts than the Preferred Pacheco Pass Network Alternative due to a new transbay tube. For example, this alternative would have over 38.8 acres of potential direct impacts to waterbodies, which includes the San Francisco Bay, whereas the Preferred Pacheco Pass Network Alternative would have only 2.3 acres of potential direct impacts.

The Authority also finds that this alternative is economically infeasible in that the additional cost for the 8.8-mile segment needed to implement a new transbay tube is estimated at about $4.7 billion—over $500 million/mile as compared to the Altamont Pass Network Alternative with Oakland terminus. Moreover, there is only slightly higher ridership and revenue potential.

The Authority finds that the extensive agency coordination and permitting necessary to implement an alternative that includes a transbay tube has the potential to create further costs, time delays, and other constructability issues that render the alternatives infeasible. To construct a new transbay tube, coordination would be required with the USACE, USFWS, and the California Coastal Commission. Crossing the Bay would also be subject to the USACE, CDFG, and the BCDC permit process. The last transbay tube was constructed in 1969, prior to NEPA, and the potential issues and delays that could arise from permitting and constructing a new crossing are unknown but would likely result in considerable delays.

The Authority further finds that this alternative presents logistical constraints that render it infeasible. This includes the concerns raised by the MTC associated with an East Bay HST alignment: right-of-way constraints and duplicate investment between Oakland and San Jose, risk of reaching agreement with UPRR along the Niles Subdivision, and potential Environmental Justice concerns through existing urbanized areas in the East Bay. The Tri-Valley PAC also raised concerns regarding land use compatibility and right-of-way constraints and the need for aerial structures through the Tri-Valley. In addition, the cities of Fremont and Pleasanton oppose Altamont Pass alignments. The Authority finds that these considerations render the alternative infeasible.

For these reasons, the Authority finds that this alternative is not a feasible alternative for substantially lessening the significant environmental impacts of the Preferred Pacheco Pass Network Alternative.

ALTAMONT PASS NETWORK ALTERNATIVE SAN JOSE, OAKLAND AND SAN FRANCISCO TERMINI VIA A TRANSBAY TUBE

The Revised Final Program EIR evaluated alignment alternatives and station location options for an Altamont Pass Network Alternative with Oakland and San Francisco Termini via a Transbay Tube. This network alternative is shown in Figure 7.2-11 and described in Table 7.2-11 of the 2008 Final Program EIR, volume 1, and Chapter 6 of the Revised Final Program EIR, volume 1.

The Authority finds that this alternative has greater environmental impacts than the Preferred Pacheco Pass Network Alternative due to a new transbay tube. For example, this alternative would have over 38.8 acres of potential direct impacts to waterbodies, which includes the San Francisco Bay, whereas the Preferred Pacheco Pass Network Alternative would have only 2.3 acres of potential direct impacts.

The Authority also finds that this alternative is economically infeasible in that the additional cost to implement a new transbay tube is estimated at about $4.4 billion as compared to the Altamont Pass Network Alternative with Oakland and San Jose termini. Moreover, there is only slightly higher ridership and revenue potential.

The Authority finds that the extensive agency coordination and permitting necessary to implement an alternative that includes a transbay tube has the potential to create further costs, time delays, and other constructability issues that render the alternatives infeasible. To construct a new transbay tube, coordination would be required with the USACE, USFWS, and the California Coastal Commission. Crossing the Bay would also be subject to the USACE, CDFG, and the BCDC permit process. The last transbay tube was constructed in 1969, prior to NEPA, and the potential issues and delays that could arise from permitting and constructing a new crossing are unknown but would likely result in considerable delays.

The Authority further finds that this alternative presents logistical constraints that render it infeasible. This includes the concerns raised by the MTC associated with an East Bay HST alignment: right-of-way constraints and duplicate investment between Oakland and San Jose, risk of reaching agreement with UPRR along the Niles Subdivision, potential Environmental Justice concerns through existing

urbanized areas in the East Bay, and right-of-way constraints within I-880 south of Fremont that could result in a long process with Caltrans. The Tri-Valley PAC also raised concerns regarding land use compatibility and right-of-way constraints and the need for aerial structures through the Tri-Valley. In addition, the cities of Fremont and Pleasanton oppose Altamont Pass alignments. The Authority finds that these considerations render the alternative infeasible.

For these reasons, the Authority finds that this alternative is not a feasible alternative for substantially lessening the significant environmental impacts of the Preferred Pacheco Pass Network Alternative.

8.2.3 Findings on Rejected Pacheco Pass Network Alternatives

The Revised Final Program EIR considered six representative Pacheco Pass network alternatives. These 6 alternatives encompass the range of different ways to combine HST alignment alternatives and station location options to implement the HST system via the Pacheco Pass and utilizing the BNSF-UPRR alignment in the Central Valley corridor. Five of the Pacheco Pass Network Alternatives are discussed below.

PACHECO PASS NETWORK ALTERNATIVE WITH OAKLAND AND SAN JOSE TERMINI

The Revised Final Program EIR evaluated alignment alternatives and station location options for a Pacheco Pass Network Alternative with Oakland and San Jose Termini. This network alternative is shown in Figure 7.2-13 and described in Table 7.2-13 of the 2008 Final Program EIR, volume 1, and Chapter 6 of the Revised Final Program EIR, volume 1.

The Authority finds this alternative would have greater environmental impacts overall than the Preferred Pacheco Pass Network Alternative, attributable to the HST alignment along the East Bay and impact wetlands and water resources.

This alternative is forecast to have about 2.1% (1.96 million riders per year by 2030) lower ridership potential than the Preferred Pacheco Pass Network Alternative, and is estimated to cost about 6.7% less ($840 million).

The Authority also finds that this alternative presents logistical constraints that render it infeasible. This includes the concerns raised by the MTC associated with an East Bay HST alignment: right-of-way constraints and duplicate investment between Oakland and San Jose, risk of reaching agreement with UPRR along the Niles Subdivision, potential Environmental Justice concerns through existing urbanized areas in the East Bay, and right-of-way constraints within I-880 south of Fremont that could result in a long process with Caltrans. This network alternative is forecast to have lower ridership potential than the Preferred Pacheco Pass Network Alternative.

The Authority further finds that this alternative would be less capable of meeting the project purpose and need and project objectives because it would not provide direct HST service to SFO (northern California's major hub airport), the San Francisco Peninsula (Caltrain Corridor), and downtown San Francisco, the major transit, business, and tourism center of the region.

For these reasons, the Authority finds that this alternative is not a feasible alternative for substantially lessening the significant environmental impacts of the Preferred Pacheco Pass Network Alternative.

PACHECO PASS NETWORK ALTERNATIVE WITH SAN FRANCISCO, OAKLAND, AND SAN JOSE TERMINI (NO TRANSBAY TUBE)

The Revised Final Program EIR evaluated alignment alternatives and station location options for a Pacheco Pass Network Alternative with San Francisco, Oakland, and San Jose Termini. This network

alternative is shown in Figure 7.2-14 and described in Table 7.2-14 of the 2008 Final Program EIR, volume 1, and Chapter 6 of the Revised Final Program EIR, volume 1.

The Authority finds this alternative would have greater environmental impacts overall than the Preferred Pacheco Pass Network Alternative, attributable to the HST alignments along both the San Francisco Peninsula and the East Bay. These impacts include wetlands, water resources, and the 100-year floodplain.

The Authority also finds that this alternative is economically infeasible in that it has greater costs (estimated at $3.6 billion more than the Preferred Pacheco Pass Network Alternative) due to the 42 additional miles of HST alignment in the East Bay. In addition, because this alternative would split frequency of HST services (express, skip-stop, suburban express, local, and regional) between the San Francisco Peninsula and the East Bay, this resulted in considerably less ridership and revenue projected (7.8 million passengers a year by 2030).

The Authority also finds that this alternative presents logistical constraints that render it infeasible. This includes the concerns raised by the MTC associated with an East Bay HST alignment: right-of-way constraints and duplicate investment between Oakland and San Jose, risk of reaching agreement with UPRR along the Niles Subdivision, potential Environmental Justice concerns through existing urbanized areas in the East Bay, and right-of-way constraints within I-880 south of Fremont that could result in a long process with Caltrans. In addition, because this alternative would split frequency of HST services (express, skip-stop, suburban express, local, and regional) between the San Francisco Peninsula and the East Bay, it resulted in considerably less ridership and revenue as compared to the Preferred Pacheco Pass Network Alternative.

For these reasons, the Authority finds that this alternative is not a feasible alternative for substantially lessening the significant environmental impacts of the Preferred Pacheco Pass Network Alternative.

PACHECO PASS NETWORK ALTERNATIVE WITH SAN JOSE TERMINUS

The Revised Final Program EIR evaluated alignment alternatives and station location options for a Pacheco Pass Network Alternative with San Jose Terminus. This network alternative is shown in Figure 7.2-15 and described in Table 7.2-15 of the 2008 Final Program EIR, volume 1, and Chapter 6 of the Revised Final Program EIR, volume 1.

The Authority finds that this alternative fails to adequately meet the underlying purpose and primary project objectives because it would service only one of the three major urban centers of the Bay Area (San Jose) and only one of the region's major commercial airports. For this reason, the Authority finds that this alternative is not a feasible alternative for substantially lessening the significant environmental impacts of the Preferred Pacheco Pass Network Alternative.

PACHECO PASS NETWORK ALTERNATIVE WITH SAN JOSE, SAN FRANCISCO, AND OAKLAND TERMINI VIA TRANSBAY TUBE

The Revised Final Program EIR evaluated alignment alternatives and station location options for a Pacheco Pass Network Alternative with San Jose, San Francisco, and Oakland Termini via Transbay Tube. This network alternative is shown in Figure 7.2-16 and described in Table 7.2-16 of the 2008 Final Program EIR, volume 1, and Chapter 6 of the Revised Final Program EIR, volume 1.

The Authority finds that this alternative has greater environmental impacts than the Preferred Pacheco Pass Network Alternative due to a new transbay tube. For example, this alternative would have over 40.3 acres of potential direct impacts to waterbodies, which includes the San Francisco

Bay, whereas the Preferred Pacheco Pass Network Alternative would have only 2.3 acres of potential direct impacts. This alternative would also have more than twice the potential impacts to wetlands.

The Authority also finds that this alternative is economically infeasible in that the additional cost for the 8.8-mile segment needed to implement a new transbay tube is estimated at about $4.6 billion—over $500 million/mile. Moreover, there is only slightly higher ridership and revenue potential.

The Authority further finds that the extensive agency coordination and permitting necessary to implement an alternative that includes a transbay tube has the potential to create further costs, time delays, and other constructability issues that render the alternatives infeasible. To construct a new transbay tube, coordination would be required with the USACE, USFWS, and the California Coastal Commission. Crossing the Bay would also be subject to the USACE, CDFG, and the BCDC permit process. The last transbay tube was constructed in 1969, prior to NEPA, and the potential issues and delays that could arise from permitting and constructing a new crossing are unknown but would likely result in considerable delays.

For these reasons, the Authority finds that this alternative is not a feasible alternative for substantially lessening the significant environmental impacts of the Preferred Pacheco Pass Network Alternative.

PACHECO PASS NETWORK ALTERNATIVE WITH SAN JOSE, OAKLAND AND SAN FRANCISCO TERMINI VIA TRANSBAY TUBE

The Revised Final Program EIR evaluated alignment alternatives and station location options for a Pacheco Pass Network Alternative with San Jose, Oakland, and San Francisco Termini via Transbay Tube. This network alternative is shown in Figure 7.2-17 and described in Table 7.2-17 of the 2008 Final Program EIR, volume 1, and Chapter 6 of the Revised Final Program EIR, volume 1.

The Authority finds that this alternative has greater environmental impacts than the Preferred Pacheco Pass Network Alternative due to a new transbay tube. For example, this alternative would have over 40.2 acres of potential direct impacts to waterbodies, which includes the San Francisco Bay, whereas the Preferred Pacheco Pass Network Alternative would have only 2.3 acres of potential direct impacts. This alternative would also have more than twice the potential impacts to wetlands.

The Authority also finds that this alternative is economically infeasible in that the additional cost for the 8.8-mile segment needed to implement a new transbay tube is estimated at about $4.7 billion—over $500 million/mile compared to the Pacheco Pass Network Alterative with Oakland and San Jose termini. Moreover, there is only slightly higher ridership and revenue potential.

The Authority finds that the extensive agency coordination and permitting necessary to implement an alternative that includes a transbay tube has the potential to create further costs, time delays, and other constructability issues that render the alternatives infeasible. To construct a new transbay tube, coordination would be required with the USACE, USFWS, and the California Coastal Commission. Crossing the Bay would also be subject to the USACE, CDFG, and the BCDC permit process. The last transbay tube was constructed in 1969, prior to NEPA, and the potential issues and delays that could arise from permitting and constructing a new crossing are unknown but would likely result in considerable delays.

The Authority further finds that this alternative presents logistical constraints that render it infeasible. This includes the concerns raised by the MTC associated with an East Bay HST alignment: right-of-way constraints and duplicate investment between Oakland and San Jose, risk of reaching agreement with UPRR along the Niles Subdivision, potential Environmental Justice concerns through existing urbanized areas in the East Bay, and right-of-way constraints within I-880 south of Fremont that could result in a long process with Caltrans.

For these reasons, the Authority finds that this alternative is not a feasible alternative for substantially lessening the significant environmental impacts of the Preferred Pacheco Pass Network Alternative.

8.2.4 Findings on Rejected Pacheco Pass with Altamont Pass (local service) Network Alternatives

The Revised Final Program EIR considered four representative Pacheco Pass with Altamont Pass (local service) network alternatives. These four alternatives encompass the range of different ways to combine HST alignment alternatives and station location options to implement the HST system via the Pacheco Pass while also providing local HST service via the Altamont Pass.

The Pacheco Pass and Altamont Pass (local service) network alternative that would terminate in San Jose does not serve either San Francisco or Oakland directly and does not meet the purpose and need for the proposed HST system. The network alternative to Oakland and San Jose is estimated to be the least costly of the remaining three network alternatives serving both the Pacheco and Altamont passes ($2.4 billion less than the alternative serving San Francisco and San Jose), would have the least environmental impacts, and would have high ridership potential, but it would not provide direct HST service to downtown San Francisco, SFO, and the San Francisco Peninsula (Caltrain Corridor) between San Francisco and San Jose. The network alternative to San Francisco and San Jose is estimated to have the highest ridership potential (3.27 million passengers a year by 2030 higher than the Oakland and San Jose alternative) but is also estimated to have the highest environmental impacts since it would require a new crossing at Dumbarton. The network alternative to San Francisco, Oakland, and San Jose (without Dumbarton Bridge) would have the highest costs ($4.4 billion more than the Oakland and San Jose alternative), and the least ridership potential (8.34 million passenger a year by 2030 less than the San Francisco and San Jose alternative), but would provide direct HST service to Oakland, San Francisco, and San Jose and the region's three international airports without requiring a new bay crossing.

The Pacheco Pass with Altamont Pass (local service) network alternatives do not compare well against Preferred Pacheco Pass Network Alternative. These network alternatives resulted in similar ridership and revenue forecasts (with less revenue than comparable Pacheco Pass network alternatives) while having considerably higher capital costs ($4.4–6.1 billion more for comparable terminus station locations). Although the Pacheco Pass with Altamont Pass (local service) alternatives would increase connectivity and accessibility by potentially providing direct HST service to additional markets, these alternatives would have higher environmental impacts, construction issues, and logistical constraints than the Preferred Pacheco Pass Network Alternative. The U.S. EPA (USEPA) and USACE concluded that the Pacheco Pass with Altamont Pass (local service) network alternatives are not likely to contain the Least Environmentally Damaging Alternative (LEDPA).

PACHECO PASS WITH ALTAMONT PASS (LOCAL SERVICE) NETWORK ALTERNATIVE WITH SAN FRANCISCO AND SAN JOSE TERMINI (DUMBARTON CROSSING)

The Revised Final Program EIR evaluated alignment alternatives and station location options for a Pacheco Pass with Altamont Pass (local service) Network Alternative with San Francisco and San Jose Termini. This network alternative is shown in Figure 7.2-18 and described in Table 7.2-18 of the 2008 Final Program EIR, volume 1, and Chapter 6 of the Revised Final Program EIR, volume 1.

The Authority finds this alternative would have greater environmental impacts than the Preferred Pacheco Pass Network Alternative because it would involve a San Francisco Bay crossing via a Dumbarton Bridge and it would have two mountain crossings from the Central Valley.

The Authority finds that this alternative is economically infeasible in that the cost are considerably higher ($5.7 -$6.0 billion more for comparable terminus station locations).

The Authority finds that the extensive agency coordination and permitting necessary to implement an alternative that includes Dumbarton Bridge crossing (i.e., coordination/permitting with USACE, USFWS, California Coastal Commission, CDFG, and BCDC) has the potential to create further costs, time delays, and other constructability issues. The BCDC also noted that bridge alternatives that could have adverse impacts on Bay resources can only be approved if there is not an alternative upland location. The Authority finds that these considerations render the alternative infeasible.

The Authority further finds that this alternative presents logistical constraints that render it infeasible. As noted by MTC, there are right-of-way constraints within I-880, and Caltrans has serious concerns about construction within this constrained median. In addition, the Tri-Valley PAC raised concerns regarding land use compatibility and right-of-way constraints and the need for aerial structures through the Tri-Valley. In addition, the cities of Fremont and Pleasanton oppose Altamont Pass alignments. The Authority finds that these considerations render the alternative infeasible.

For these reasons, the Authority finds that this alternative is not a feasible alternative for substantially lessening the significant environmental impacts of the Preferred Pacheco Pass Network Alternative.

PACHECO PASS WITH ALTAMONT PASS (LOCAL SERVICE) NETWORK ALTERNATIVE WITH OAKLAND AND SAN JOSE TERMINI

The Revised Final Program EIR evaluated alignment alternatives and station location options for a Pacheco Pass with Altamont Pass (local service) Network Alternative with Oakland and San Jose Termini. This network alternative is shown in Figure 7.2-19 and described in Table 7.2-19 of the 2008 Final Program EIR, volume 1, and Chapter 6 of the Revised Final Program EIR, volume 1.

The Authority finds this alternative would have greater environmental impacts than the Preferred Pacheco Pass Network Alternative because it would involve two mountain crossings from the Central Valley.

The Authority also finds that this alternative is economically infeasible in that the cost are considerably higher ($4.4 -$6.1 billion more for comparable terminus station locations).

The Authority further finds that this alternative presents logistical constraints that render it infeasible. This includes the concerns raised by the MTC associated with an East Bay HST alignment: right-of-way constraints and duplicate investment between Oakland and San Jose, risk of reaching agreement with UPRR along the Niles Subdivision, potential Environmental Justice concerns through existing urbanized areas in the East Bay, and right-of-way constraints within I-880 south of Fremont that could result in a long process with Caltrans. The Tri-Valley PAC also raised concerns regarding land use compatibility and right-of-way constraints and the need for aerial structures through the Tri-Valley. In addition, the cities of Fremont and Pleasanton oppose Altamont Pass alignments. The Authority finds that these considerations render the alternative infeasible.

For these reasons, the Authority finds that this alternative is not a feasible alternative for substantially lessening the significant environmental impacts of the Preferred Pacheco Pass Network Alternative.

PACHECO PASS WITH ALTAMONT PASS (LOCAL SERVICE) NETWORK ALTERNATIVE WITH SAN FRANCISCO, OAKLAND, AND SAN JOSE TERMINI (W/O DUMBARTON CROSSING)

The Revised Final Program EIR evaluated alignment alternatives and station location options for a Pacheco Pass with Altamont Pass (local service) Network Alternative with San Francisco, Oakland, and San Jose Termini, but without a Dumbarton Bridge crossing. This network alternative is shown

in Figure 7.2-20 and described in Table 7.2-20 of the 2008 Final Program EIR, volume 1, and Chapter 6 of the Revised Final Program EIR, volume 1.

The Authority finds this alternative would have greater environmental impacts than the Preferred Pacheco Pass Network Alternative because it would involve two mountain crossings from the Central Valley and extend up both sides of San Francisco Bay.

The Authority finds that this alternative is economically infeasible in that the costs are considerably higher ($4.4 -$6.0 billion more for comparable terminus station locations).

The Authority further finds that this alternative presents logistical constraints that render it infeasible. This includes the concerns raised by the MTC associated with an East Bay HST alignment: right-of-way constraints and duplicate investment between Oakland and San Jose, risk of reaching agreement with UPRR along the Niles Subdivision, potential Environmental Justice concerns through existing urbanized areas in the East Bay, and right-of-way constraints within I-880 south of Fremont that could result in a long process with Caltrans. The Tri-Valley PAC also raised concerns regarding land use compatibility and right-of-way constraints and the need for aerial structures through the Tri-Valley. In addition, the cities of Fremont and Pleasanton oppose Altamont Pass alignments. The Authority finds that these considerations render the alternative infeasible.

For these reasons, the Authority finds that this alternative is not a feasible alternative for substantially lessening the significant environmental impacts of the Preferred Pacheco Pass Network Alternative.

PACHECO PASS WITH ALTAMONT PASS (LOCAL SERVICE) NETWORK ALTERNATIVE WITH SAN JOSE TERMINUS

The Revised Final Program EIR evaluated alignment alternatives and station location options for a Pacheco Pass with Altamont Pass (local service) Network Alternative with San Jose Terminus. This network alternative is shown in Figure 7.2-21 and described in Table 7.2-21 of the 2008 Final Program EIR, volume 1, and Chapter 6 of the Revised Final Program EIR, volume 1.

The Authority finds that this alternative fails to adequately meet the purpose and need and primary project objectives because it would service only one of the three major urban centers of the Bay Area (San Jose) and only one of the region's major commercial airports. For this reason, the Authority finds that this alternative is not a feasible alternative for substantially lessening the significant environmental impacts of the Preferred Pacheco Pass Network Alternative.

8.2.5 Findings on Pacheco Pass Network Alternative with San Francisco and San Jose Termini, Central Valley alignments, and Modesto station location options

The Revised Final Program EIR evaluated alignment alternatives and station location options for a Pacheco Pass Network Alternative with San Francisco and San Jose Termini. This network alternative is shown in Figure 7.2-12 and its impacts are described in Table 7.2-12 of the 2008 Final Program EIR, volume 1, and Chapter 6 of the Revised Final Program EIR, volume 1. The difference between this network alternative and the Preferred Pacheco Pass Network Alternative described in Chapter 7 of the Revised Final Program EIR is that it utilizes the BNSF-UPRR alignment in the Central Valley rather than UPRR N/S alignment. This network alternative would therefore utilize the Amtrak Briggsmore station in Modesto rather than the Modesto downtown station included in the Preferred Alternative.

The Authority finds that the Pacheco Pass Network Alternative depicted in Figure 7.2-12 has similar environmental impacts overall as the Preferred Pacheco Pass Network Alternative that utilizes the UPRR N/S alignment in the Central Valley, but would result in slightly greater impacts in a number of

resource areas. Compared to the Preferred Pacheco Pass Network Alternative, this alternative would result in an additional 744 linear feet of impact to streams, 1.5 acres of impact to waterbodies, 0.8 acre of impact to wetlands, 89 acres of impact to the 100-year floodplain, 100 acres of impact on groundwater, and 244 acres of impact on important farmland.

The Authority further finds that the Pacheco Pass Network Alternative depicted in Figure 7.2-12 has a similar potential to meet the purpose and need for the HST system as the Preferred Pacheco Pass Alternative. At the same time, the Authority finds that the use of the Amtrak Briggsmore station in Modesto for the Pacheco Pass Network Alternative depicted in Figure 7.2-12 is less consistent with the Authority's design practices than the use of the downtown Modesto station in the Preferred Pacheco Pass Network Alternative. These design practices emphasize the development of downtown station locations that can serve as multi-modal hubs, which are integral to achieving the Authority's smart-growth priorities.

Based on these facts, the Authority finds that, for programmatic planning purposes, the Preferred Pacheco Pass Network Alternative is superior to the Pacheco Pass Network Alternative depicted in Figure 7.2-12 and it is therefore selecting the Preferred Pacheco Pass Network Alternative to advance for further planning. Recognizing the potential uncertainty over the alignment for the HST system in the Central Valley, however, the Authority further finds that at the project level, it is necessary to continue to evaluate the BNSF alignment, or some combination of UPRR and BNSF. This is the case because of uncertainty over future negotiations with both the UPRR and the BNSF for use of some of their right-of-way, and due to the need to continue investigation of alignments/linkages to potential sites or maintenance facilities including Castle AFB.

8.2.6 Findings That the Preferred Pacheco Pass Network Alternative serving San Francisco via San Jose is the Environmentally Superior Alternative

The selection of the Preferred Pacheco Pass Network Alternative with San Francisco and San Jose Termini, utilizing the UPRR N/S alignment in the Central Valley (defined in Section 2.2 herein), over the other representative network alternatives involves a series of tradeoffs and balancing considerations. Each of the 21 representative network alternatives presents different types and degrees of environmental impacts, but at the same time each one involves some adverse impacts in the areas of biological resources and wetlands, waterbodies (San Francisco Bay and lakes), noise and vibration, cultural resources, farmland, and parks and recreational resources. The basic choice of how to connect the Bay Area to the Central Valley (Pacheco, Altamont, or Pacheco with Altamont) involves creation of environmental impacts in different locations, rather than avoiding impacts altogether. The choice also has potential for environmental benefits, some of which would be created in different locations depending no the mountain pass alternative selected. Each of the 21 representative network alternatives also has varying ability to meet the project purpose and objectives, and varying challenges in terms of constructability. The selection of an overall network therefore involves a weighing of different types and amounts of impacts and benefits in different locations, along with the ability of the alternatives to meet the purpose and objectives and be feasibly constructed.

The Authority finds that Preferred Pacheco Pass Network Alternative is the environmentally superior alternative overall among those representative network alternatives that meet the project purpose and need by providing service to at least two major urban centers of the Bay Area (eliminating alternatives shown in Figures 7.2.4, 7.2.5, 7.2.6, 7.2.7, 7.2.15, and 7.2-21 of the 2008 Final Program EIR). Among the reasons for this conclusion are the following points:

<u>Avoids adverse environmental impacts to the San Francisco Bay and its resources</u>

The Preferred Pacheco Pass Network Alternative would serve two major urban centers, and provide connectivity to the San Francisco Airport, but would avoid the adverse impacts to the San Francisco Bay associated with the nine representative network alternatives that involve either a new transbay

tube or bridge/tube at the Dumbarton Crossing (e.g., alternatives shown in 7.2-1. 7.2-3, 7.2-5, 7.2-8, 7.2-10, 7.2-11, 7.2-16, 7.2-17, and 7.2-18 of the 2008 Final Program EIR). These avoided impacts include impacts to Bay wetlands and non-wetland waters, and the Bay's species and habitats.

Avoids conflicts with the Don Edwards San Francisco Bay National Wildlife Refuge

The Preferred Pacheco Pass Network Alternative would avoid crossing through the Don Edwards San Francisco Bay National Wildlife Refuge, eliminating the potential conflict with this nationally designated wildlife refuge associated with alternatives that would involve a bridge/tube at the Dumbarton Crossing (e.g., alternatives shown in Figures 7.2-1, 7.2-3, 7.2-5, 7.2-8, and 7.2-18 of the 2008 Final Program EIR).

Avoids adverse environmental impacts of additional track associated with serving three termini

The Preferred Pacheco Pass Network Alternative would avoid the adverse environmental impacts associated with the representative network alternatives that would serve three termini using additional track along the East Bay or the San Francisco Peninsula (e.g., alternatives shown in Figures 7.2-9, 7.2-14, and 7.2-20 of the 2008 Final Program EIR). These alternatives had generally greater impacts in the areas of noise and vibration, farmlands, cultural resources, hydrology and water resources, biology and wetlands, and parks and recreation resources based on the additional mileage of track.

Results in fewer noise impacts and fewer impacts on parks/recreation resources

The Preferred Pacheco Pass Network Alternative would have somewhat less potential impacts for noise and vibration impacts and would affect a fewer number of 4(f) and 6(f) resources (19 vs. 20–22) than the Altamont Pass alternatives shown in Figures 7.2-1, and 7.2-2 of the 2008 Final Program EIR.

Results in fewer total impacts on waterbodies and wetlands

The Preferred Pacheco Pass Network Alternative would have fewer total impacts on waterbodies and wetlands than the Altamont Pass Alternatives shown in Figures 7.2-1, 7.2-5, and 7.2-8 of the 2008 Final Program EIR. The two Altamont Pass alternatives providing direct service to San Francisco would include a new Bay crossing at Dumbarton and would cross areas within the Don Edwards San Francisco Bay National Wildlife Refuge (wetlands and sensitive habitat) and therefore would have considerably higher impacts on waters, wetlands, and 4(f) resources than the Preferred Pacheco Pass Network Alternative. In comparison to these Altamont Pass alternatives, the Preferred Pacheco Pass Network Alternative would have considerably less potential impacts on waterbodies (2.3 acres vs. 39.6 acres), considerably less potential impacts on wetlands (14.8 acres vs. 44.4–45.9 acres), while having relatively similar potential impacts on the number of special status plant species (59 vs. 56), special status wildlife species (54 vs. 49-50), and cultural resources (168 vs. 149-180), but slightly more impacts on non-wetland waters (20,300 linear feet. vs. 15,947–16,773 linear feet),

Results in fewer community cohesion impacts

The Preferred Pacheco Pass Network Alternative would have fewer potential impacts on minority and/or low-income populations than those extending up the East Bay to Oakland (e.g., alternatives shown in Figures 7.2-2, 7.2-3, 7.2-6, 7.2-9, 7.2-11, 7.2-13, 7.2-14, 7.2-17, 7.2-19 and 7.2-20 of the 2008 Final Program EIR). In its adopted Regional Rail Plan for the San Francisco Bay Area, the MTC raised certain issues associated with an East Bay HST alignment related to potential Environmental Justice concerns. The environmental screening in the MTC Regional Rail Plan indicated potential concerns with construction of a new elevated alignment though existing urbanized areas especially in the East Bay between Fremont and Oakland where improvements to the corridor pass through minority and/or low-income neighborhoods.

Involves impacts to farmlands, wildlife movement, and the Grasslands Ecological Area that have a higher likelihood of being fully mitigated at the project level

The Preferred Pacheco Pass Network Alternative would have greater impacts on important farmland than the Altamont Pass alternatives (1,128 acres vs. 758 – 764 acres). It would also result in impacts on resources within the area generally designated as the GEA, resulting in greater potential impacts to wildlife movement. These types of impacts can be mitigated at the project level through the purchase of conservation easements, to which the Authority has committed (see 4.7 and 4.14 above), to permanently protect the highest quality farmlands, preserve open space and sensitive habitat, and protect wildlife movement corridors in a manner that is consistent with, supportive of, and contributes to the GEA.

The USEPA and USACE have concurred that the Preferred Pacheco Pass Network Alternative serving San Francisco via San Jose is most likely to yield the LEDPA for purposes of their regulatory needs under Section 404 of the federal Clean Water Act.

CONCLUSION ON ALTERNATIVES

In summary, the Authority finds that there are no feasible alternatives that would avoid or substantially lessen the significant adverse impacts of the Preferred Pacheco Pass Network Alternative serving San Francisco via San Jose Termini that would remain following the application of mitigation strategies discussed in these findings, while still meeting the the project's underlying purpose and project objectives. Because adverse impacts remain, the Authority will adopt a Statement of Overriding Considerations as discussed in the following chapter.

9 STATEMENT OF OVERRIDING CONSIDERATIONS

The Revised Final Program EIR and the CEQA Findings of Fact conclude that implementing the Preferred Pacheco Pass Network Alternative will result in significant impacts to the environment that cannot be avoided or substantially lessened with the application of feasible mitigation strategies or feasible alternatives. This Statement of Overriding Considerations is therefore necessary to comply with CEQA (Pub. Resources Code, § 21081) and the State CEQA Guidelines (§ 15093). The significant and unavoidable impacts and the benefits related to implementing the HST system in the Bay Area to Central Valley study region via the Preferred Pacheco Pass Network Alternative are described below. The Authority Board has carefully weighed these impacts and benefits of the Preferred Pacheco Pass Network Alternative. As described below, the Authority finds that the benefits of the Preferred Pacheco Pass Network Alternative outweigh the significant and unavoidable environmental impacts.

This Statement of Overriding Considerations must be understood in its programmatic context. The level of analysis provided in the Revised Final Program EIR is less detailed than that typically provided in a project-level EIR, such as for approval of a development project at a particular location. Because a program EIR necessarily provides less detailed analysis and less detail concerning mitigation, it is not always possible to conclude with certainty that the adoption of the identified mitigation strategies at the program level will reduce adverse impacts to a less-than-significant level. In some instances, although the Authority is confident that its range of mitigation will avoid or substantially lessen adverse impacts, it cannot conclude with certainty that this will be the case until project-level data is available. This is particularly true for certain terrestrial impacts, where the precise scope of the impact and the adequacy of the adopted mitigation strategies cannot be determined until the Authority selects a specific alignment. For these areas of uncertainty, the Authority is choosing to override the adverse impacts even though at the project level it may conclude that an impact can in fact be mitigated to a less-than-significant level.

9.1 General Findings on Significant and Unavoidable Impacts Associated with the Preferred Pacheco Pass Network Alternative

Based on the Revised Final Program EIR and the CEQA Findings of Fact contained herein, as well as the evidentiary materials supporting these documents, the Authority finds that implementing the Preferred Pacheco Pass Network Alternative could result in the following list of significant and unavoidable impacts to the environment:

Traffic, Circulation, and Transit

- Increased station area traffic
- Increased traffic on Monterey Highway

Noise and Vibration

- Exposure to Ground-borne Vibration

Land Use Impacts and Station Area Development

- Long-Term Land Use Compatibility Impacts with HST Operations
- Impacts to Neighborhoods During Construction

Agricultural Lands

- Severance of Prime, Statewide Important, and Unique Farmlands, and Farmlands of Local Importance, due to Project Uses

Aesthetics and Visual Resources

- Long-term aesthetic impacts from introduction of a new visual feature
- Short-term visual quality impacts due to construction

Cultural and Paleontological Resources

- Impacts to Archaeological Resources and Traditional Cultural Properties
- Impacts to Historic Properties/Resources
- Impacts to Paleontological Resources

Biological Resources and Wetlands

- Impacts to Sensitive Habitats and Sensitive Vegetation Communities
- Impacts to Wildlife Movement Corridors
- Impacts to Non-wetland Jurisdictional Waters
- Impacts to Wetlands
- Impacts to Marine and Anadromous Fisheries
- Impacts to Special Status Species
- Impacts to Protected Habitats and Conservation Areas

Public Parks and Recreation

- Impacts to Parks and Recreation Resources

Cumulative Impacts

- Cumulative traffic impacts around stations
- Cumulative land use compatibility impacts
- Cumulative impacts associated with agricultural land severance
- Cumulative aesthetic impacts
- Cumulative impacts to cultural resources
- Cumulative impacts to biological resources
- Cumulative impacts to parks and recreation

The Authority further finds that the while the mitigation strategies it adopts as part of the CEQA Findings of Fact are very likely to avoid or substantially lessen many of the foregoing environmental impacts, and mitigation adopted to address one subject area may result in beneficial effects in other subject areas, it cannot find with certainty that these impacts will be fully mitigated absent the more detailed information that will be available at the project-level. For this reason, and out of an abundance of caution, the Authority chooses to make a statement of overriding considerations that encompasses all of the foregoing at the program level. It is the Authority's intent that the mitigation strategies will be refined and applied at the project level, and augmented to the degree necessary, to ensure that impacts are fully mitigated to the extent feasible.

9.2 Overriding Considerations for the HST System and for the Preferred Pacheco Pass Network Alternative

There are numerous benefits of the HST system as a whole, and of the Preferred Pacheco Pass Network Alternative, which outweigh the significant and unavoidable adverse effects of implementing the Preferred Pacheco Pass Network Alternative in the Bay Area to Central Valley study region. These

benefits are in the areas of transportation, the environment, land-use planning, economics, and social considerations.

9.2.1 Benefits of the Statewide High-Speed Train System

Transportation Benefits

The capacity of California's intercity transportation system is insufficient to meet existing and future demand, and the current and projected future congestion of the system will continue to result in deteriorating transportation conditions, reduced reliability, and increased travel times. The system has not kept pace with the tremendous increase in population, economic activity, and tourism in California. The interstate highway system, commercial airports, and conventional passenger rail system serving the intercity travel market are operating at or near capacity and will require large public investments for maintenance and expansion to meet existing demand and future growth over the next 20 years and beyond. Moreover, the ability to expand major highways and key airports is uncertain; some needed expansions may be impractical or may be constrained by physical, political, or other factors.

The HST system will provide a solution to many of the State's existing and looming transportation problems. It will meet the State's need for a safe and reliable mode of travel linking the major metropolitan areas of the state and deliver predictable, consistent travel times sustainable over time. The HST system will provide quick, competitive travel times between California's major intercity markets. The passenger cost for travel via the HST service will be lower than for travel by automobile or air for the same intercity markets.

By providing a new intercity, interregional, and regional passenger mode, the HST system will improve connectivity and accessibility to other existing transit modes and airports. Travel options available in the Central Valley and other areas of the state with limited bus, rail, and air service for intercity trips will be improved. The HST system also provides system redundancy in cases of extreme events such as adverse weather or petroleum shortages (HST trains are powered by electricity which can be generated from non-petroleum or petroleum-fueled sources; automobiles and airplanes currently require petroleum). The HST system will provide a predominantly separate transportation system that will be less susceptible to many factors influencing reliability, such as capacity constraints, congestion, and incidents that disrupt service.

The HST system will add capacity to the state's transportation infrastructure and reduce traffic on certain intercity highways and around airports to the extent that intercity trips are diverted to the HST system. Diversions from the automobile to HST could lead to a projected 2.3% statewide reduction in vehicles miles traveled on the highway system, or 9.74 billion vehicle miles traveled annually. It also will eliminate delays at existing at-grade crossings where the HST system will provide grade separation. The HST system also will decrease injuries and fatalities due to diversion of trips from highways, will improve connectivity, and will add a variety of connections to existing modes, additional frequencies, and greater flexibility.

Benefits to the Environment

In addition to reducing highway congestion, the HST system as a whole will provide substantial improvements in air quality, transportation energy efficiency, and noise. The HST system will decrease air pollutants statewide and in all air basins analyzed by reducing pollution generated by automobile combustion engines, as a result of decreased vehicle miles traveled by automobiles and decreased automobile congestion. Compared to the No Project scenario, the HST system will result in a reduction of 5.8 million barrels of oil and 3.4 million tons (6.8 billion pounds) of CO2 emissions annually by 2030, helping the State meet the CO_2 emissions reductions target in Assembly Bill 32. The HST system will also increase energy efficiency in transportation use because HST uses less energy to move passengers than either airplanes or automobiles: the HST system will use about one-

third the energy needed by an airplane, about one-half the energy needed by an automobile for an intercity automobile trip, and one-fifth the energy needed by an automobile for a commuter automobile trip. In addition, noise reduction will occur in locations where grade separations eliminate horn and crossing gate noise at existing grade crossings.

The statewide HST system has minimized environmental impacts by utilizing existing transportation corridors. The preferred alignment alternatives and station location options for the system as a whole have been crafted to avoid and/or minimize the potential impacts to cultural, park, recreational and wildlife refuges to the greatest extent practicable. In this way, the HST system meets the purpose and need and project objectives for improving the State's transportation options, while doing so in an environmentally sensitive way.

Land Use Planning Benefits

The HST system will be highly compatible with local, regional, and state plans and policies that support rail systems and TOD and will offer opportunities for increased land use efficiency (i.e., higher density development and reduced rate of farmland loss). The HST system will promote transit-oriented, higher-density development around transit nodes as the key to stimulate in-fill development that makes more efficient use of land and resources and can better sustain population growth. The increased density of development in and around HST stations yields the additional public benefit of making public infrastructure improvements more cost-effective. Additionally, the HST system is expected to be a catalyst for wider adoption of smart growth principles in communities near HST stations.

The HST system will also meet the need for improved inter-modal connectivity with existing local and commuter transit systems. HST stations in California will be multi-modal transportation hubs. All the selected high-speed rail station locations will provide linkage with local and regional transit, airports, and highways. In particular, convenient links to other rail services (heavy rail, commuter rail, light rail, and conventional intercity) will promote TOD at stations by increasing ridership and pedestrian activity at these "hub" stations. A high level of accessibility and activity at the stations can make the nearby area more attractive for additional economic activity. Most of the potential stations identified for further evaluation at the project level are located in heart of the downtown/central city area of California's major cities, minimizing potential impacts on the environment and maximizing connectivity with other modes of transportation.

Economic Benefits

The HST system will generate economic benefits related to revenue generated by the system, economic growth and jobs generated by construction and operation of the system, benefits from reduced delays to air and auto travelers, and economic advantages related to proximity to the HST system.

As noted in Chapter 1 of the 2008 Final Program EIR, the market for intercity travel in California is projected to grow substantially over the next 20 years. By 2030, the HST system is forecast to carry up to approximately 100 million intercity passengers and is expected to generate revenues that would substantially exceed operations and maintenance costs.

Construction of the HST system will generate the equivalent of almost 160,000 construction related jobs statewide. Operations and maintenance of the HST system would generate approximately 450,000 permanent jobs statewide. In addition, the HST system would improve the economic productivity of workers engaging in intercity travel by providing an option to avoid the delays and unpredictability associated with air and highway travel. These economic benefits are in marked contrast to the cost of expanding airports and highways, which would be two to three times the cost

of the HST system to meet the demand for 2030, even assuming this type of expansion is even feasible.

Finally, experiences in other countries have shown that an HST system can provide a location advantage to those areas in proximity to an HST station because an HST system would improve accessibility to labor and customer markets, potentially improving the competitiveness of the state's industries and the overall economy. Businesses that locate in proximity to an HST station could operate more efficiently than businesses that locate elsewhere. This competitive advantage may be quite pronounced in high-wage employment sectors that are frequently in high demand in many communities.

Social Benefits

The HST system would provide a new intercity, interregional, and regional passenger mode that would improve connectivity and accessibility to other existing transit modes and airports. The HST system would improve the travel options available in the Central Valley and other areas of the state with limited bus, rail, and air service for intercity trips and the passenger cost for travel via the HST system would be lower than for travel by automobile or air for the same intercity markets.

The HST system would provide an opportunity for some people who would not otherwise make trips to do so, e.g., where travel options are currently limited. In addition, HST is a mode of transportation that can enhance and strengthen urban centers. In combination with appropriate local land use policies, the increased accessibility afforded by the high-speed service could encourage more intensive development and may lead to higher property values around stations.

9.2.2 Benefits of the Preferred Pacheco Pass Network Alternative in the Bay Area to Central Valley Region

The benefits of the HST system as a whole are also benefits of the Preferred Pacheco Pass Network Alternative in the Bay Area to Central Valley study region. The Preferred Pacheco Pass Network Alternative also involves some benefits unique to the Bay Area to Central Valley study region that further support the Authority's conclusion that the project's benefits outweigh its significant and unavoidable environmental impacts.

- The Preferred Pacheco Pass Network Alternative best serves the connection between northern and southern California with the greatest potential frequency and capacity, superior connectivity between the South Bay and Southern California, and fewer potential intermediate stops. Of the network alternatives examined, it is therefore best able to meet the purpose and need of the statewide HST system.
- The Preferred Pacheco Pass Network Alternative would result in a reduction in vehicle miles traveled (annual) of about 1.75%, or 716 million VMT, in the Bay Area (Alameda, Contra Costa, San Francisco, San Mateo and Santa Clara Counties) and 8.0%, or 3.69 billion VMT, in the Central Valley (San Joaquin, Stanislaus, Merced, Madera, Fresno, Tulare, Kern and Kings Counties), creating improvements in highway congestion and reductions in air pollutant emissions.
- The Preferred Pacheco Pass Network Alternative is the network alternative could enable the early implementation of the HST/Caltrain section between San Francisco, San Jose, and Gilroy.
- The Preferred Pacheco Pass Network Alternative achieves the project purpose and objectives while minimizing the public safety concerns and technological challenges associated with known faults and other seismic hazards.
- The Preferred Pacheco Pass Network Alternative achieves the project purpose and objectives while minimizing environmental impacts and avoiding impacts on the San Francisco Bay.

- The Preferred Pacheco Pass Network Alternative has the advantage of fewer stops through the high-speed trunk of the system between San Francisco or San Jose and Southern California, thereby minimizing the potential for urban sprawl and resulting in fewer community impacts than other network alternatives that were studied.
- The U.S. Army Corps of Engineers and the U.S. Environmental Protection Agency have concurred that the Preferred Pacheco Pass Network Alternative would most likely contain the least environmentally damaging practicable alternative (LEDPA). For this reason, the Preferred Pacheco Pass Network Alternative is the network alternative in the Bay Area to Central Valley study region that will have the highest likelihood of being efficiently planned, reviewed, and constructed.

9.3 Conclusion

Implementing the HST system in the Bay Area to Central Valley study region will result in significant environmental impacts, regardless of which network alternative is selected. The decision of how to implement the HST system in the Bay Area to Central Valley study region therefore involves a balancing of different types and degrees of environmental impacts in different locations. The Preferred Pacheco Pass Network Alternative will contribute to achieving the distinct benefits of the HST system as a whole, including improved transportation and reduced congestion, improved air quality, energy savings, and greater opportunities for smart-growth land use planning. At the same time, the Preferred Pacheco Pass Network Alternative minimizes adverse impacts on the environment and qualifies as the environmentally preferable alternative. The Authority therefore finds that the transportation, environmental, land use, economic, and social benefits of the Preferred Pacheco Pass Network Alternative outweigh the adverse environmental impacts that will remain after adoption and application of all mitigation strategies listed in this document.

CALIFORNIA
HIGH-SPEED RAIL
AUTHORITY

Resolution # HSRA 11-11

Certification of the Bay Area to Central Valley High-Speed Train Revised Final Program Environmental Impact Report for Compliance with the California Environmental Quality Act (CEQA)

Adoption of CEQA Findings of Fact and Statement of Overriding Considerations

Adoption of Mitigation Monitoring and Reporting Program

Approval of the Pacheco Pass Network Alternative Serving San Francisco via San Jose Preferred Alignment Alternatives and Station Location Options

WHEREAS, pursuant to the California High-Speed Rail Act, Public Utilities Code section 185000, et seq., the California High-Speed Rail Authority ("Authority") was created in 1996 to implement a high-speed train system connecting California's major metropolitan areas.

WHEREAS, Section 185030 of the Public Utilities Code provides that the Authority shall direct the development and implementation of intercity high-speed rail service that is fully integrated with the state's existing intercity rail and bus network, and further directs that such an intercity high-speed rail network in turn shall be fully coordinated and connected with commuter rail lines and urban rail transit lines developed by local agencies, as well as other transit services, through the use of common station facilities whenever possible.

WHEREAS, pursuant to a Memorandum of Understanding between the California High Speed Rail Authority and the Federal Railroad Administration ("FRA"), the Authority and the FRA prepared a combined Program Environmental Impact Report/Environmental Impact Statement (EIR/EIS) for compliance with the requirements of both the California Environmental Quality Act ("CEQA", Public Resources Code, section 21000, et seq.) and the National Environmental Policy Act ("NEPA");

WHEREAS, on November 2, 2005, by resolution No. 05-01, the Authority approved general alignments and station locations for further study in project-level environmental documents for much of the state, but directed staff to proceed with the preparation of a separate program level EIR to identify a preferred alignment within the broad corridor between and including the Altamont Pass and the Pacheco Pass for the HST System segment connecting the San Francisco Bay Area to the Central Valley;

WHEREAS, the Authority and FRA prepared and circulated a Bay Area to Central Valley High-Speed Train (HST) Draft Program EIR/EIS was prepared and circulated for public and agency comment in July 2007, was posted on the Authority's website and lodged in libraries across the state, and was the subject of eight public hearings by the Authority;

WHEREAS, the 2007 Draft Program EIR/EIS evaluates the potential environmental impacts of implementing the HST system between the San Francisco Bay Area and the Central Valley utilizing three basic types of network alternatives, including the Pacheco Pass, the Altamont Pass, and the Pacheco Pass with Altamont Pass (local service);

WHEREAS, the Authority and the FRA received over 400 letters and postcards commenting on the 2007 Draft Program EIR/EIS;

WHEREAS, the Authority and FRA prepared a Final Program EIR/EIS, which included responses to comments on the 2007 Draft Program EIR/EIS, and which identified the Pacheco Pass Network Alternative Serving San Francisco via San Jose as the preferred alternative for the HST System segment connecting the San Francisco Bay Area to the Central Valley;

WHEREAS, in July 2008, the Authority certified the Final Program EIR for compliance with CEQA, adopted CEQA findings of fact and overriding considerations and a mitigation monitoring and reporting program, and approved the Pacheco Pass Network Alternative Serving San Francisco via San Jose for further study in project-level environmental documents;

WHEREAS, the Authority's compliance with CEQA was challenged in the litigation *Town of Atherton, et al., v. California High-Speed Rail Authority*, Sacramento Superior Court No. 34-2008-80000022;

WHEREAS, as a result of that litigation, the Superior Court entered a final judgment requiring the Authority to undertake additional efforts to comply with CEQA for certain topics identified in the final judgment before making a new decision on a preferred alternative;

WHEREAS, in December 2009, the Authority rescinded its certification of the 2008 Final Program EIR/EIS, its approval of the Pacheco Pass Network Alternative Serving San Francisco via San Jose; and related approvals;

WHEREAS, the Authority prepared and circulated a Revised Draft Program EIR to comply with the final judgment in the *Town of Atherton* litigation, circulated it for 45 days, between March 11, 2010, and April 26, 2010; made the document available on its website, and provided notice through newspapers and mailed notice to more than 50,000 individuals and entities;

WHEREAS, the Authority received more than 500 written comment letters and received public testimony from more than 50 individuals, comprising more than 3700 comments;

WHEREAS, the Authority prepared a Revised Final Program EIR, which includes main text, responses to comments, and the 2008 Final Program EIR;

WHEREAS, the Authority posted the Revised Final Program EIR on its website on August 20, 2010; made printed copies available in local libraries on August 23, 2010; mailed electronic copies to approximately 700 individuals and entities that commented on the Revised Draft Program EIR and provided a mailing address; and provided mailed notification of the Revised Final Program EIR to more than 50,000 individuals and entities with direction on how to access a copy of the document;

WHEREAS, prior to taking action, the Authority has reviewed, and considered, among other items: (1) the Revised Final Program EIR, which includes the 2008 Final Program EIR; (2) the entire record before the Authority when it made its July 8, 2008, decisions; (3) all information and data in technical documents supporting the Revised Final Program EIR; (4) the entire body of public comment submitted to the Authority, including that contained in Volume 2 of the 2010 Revised Final Program EIR and Volume 2 of the 2008 Final Program EIR; (5) all verbal and written public comments and evidence presented to it; and (6) the proposed CEQA Findings of Fact and Statement of Overriding Considerations and proposed Mitigation Monitoring and Reporting Program.

WHEREAS, the Revised Final Program EIR, and the proposed CEQA Findings of Fact and Statement of Overriding Considerations, and Mitigation Monitoring and Reporting Program, reflect the independent judgment of the Authority and are deemed adequate for purposes of making decisions on a preferred alignment for the HST System segment to connect the San Francisco Bay Area to the Central Valley;

WHEREAS, the Authority has considered the environmental effects of the Pacheco Pass Network Alternative Serving San Francisco via San Jose as presented in the Revised Final Program EIR and finds that with the inclusion of the described design practices and mitigation strategies, as further discussed in the attached CEQA Findings of Fact, the potential adverse impacts of the preferred network alternative will be avoided, reduced and minimized to the extent feasible and that the feasible mitigation strategies identified at the program-level of analysis will be applied and refined at the project level to further avoid and reduce impacts; and that additional mitigation measures will be considered as part of the CEQA process for the project-level EIRs that will be prepared; and

WHEREAS, all legal prerequisites to the adoption of this Resolution have been fulfilled;

NOW, THEREFORE, IT IS RESOLVED by the California High-Speed Authority as follows:

Section 1. Certification of Revised Final Program EIR. The Authority hereby certifies that:

(a) the Revised Final Program EIR has been completed in compliance with CEQA and the final judgment in the *Town of Atherton* case;

(b) the Revised Final Program EIR has been presented to the Authority Board and the Board has reviewed and considered the information contained in the Revised Final program EIR prior to approving the project; and

(c) the Revised Final Program EIR reflects the Authority's independent judgment and analysis.

Section 2. Approval of CEQA Findings of Fact. As the decision-making body for the High-Speed Train system, the Authority has reviewed and considered the information contained in the Revised Final Program EIR and in the CEQA Findings of Fact attached hereto as Exhibit "A" and supporting documentation. The Authority determines that the CEQA Findings of Fact contain a complete and accurate reporting of the environmental impacts and mitigation strategies associated with the Pacheco Pass Network Alternative serving San Francisco via San Jose, including preferred alignment alternatives and station location options as described in Chapter 7 of the Revised Final Program EIR. The Authority further finds that the CEQA Findings of Fact have been completed in compliance with CEQA and the State CEQA Guidelines. The Authority hereby approves and adopts the CEQA Findings of Fact attached hereto as Exhibit "A".

Section 3. Approval of Statement of Overriding Considerations. The Authority hereby finds that the Statement of Overriding Considerations was completed in accordance with Public Resources Code section 21081 and State CEQA Guidelines Section 15093, subdivision (a), which states that CEQA requires the decision-making agency to balance, as applicable, the economic, legal, social, technological, or other benefits of a proposed project against its unavoidable environmental risks when determining whether to approve the project. The Statement of Overriding Considerations is included in the Findings of Fact attached hereto as Exhibit "A" and sets forth those significant effects on the environment that are found to be unavoidable, but are acceptable due to the overriding concerns and benefits expected to result from implementing the Pacheco Pass Network Alternative with San Francisco and San Jose Termini as part of the statewide HST System. The Authority hereby approves and adopts the Statement of Overriding Considerations included in the Findings of Fact attached hereto as Exhibit "A".

Section 4. Adoption of Mitigation Monitoring and Reporting Program. Pursuant to Public Resources Code section 21081.6, and State CEQA Guidelines Section 15091, subdivision (d), the Authority hereby adopts the Mitigation Monitoring and Reporting Program attached hereto as Exhibit "B".

Section 5. Approval of the Pacheco Pass Network Alternative serving San Francisco via San Jose, Preferred Alignments, and Preferred Station Location Options. Based on and in consideration of all of the foregoing, the Authority hereby approves the preferred network alternative identified in Chapter 7 of the Revised Final Program EIR as the Pacheco Pass Network Alternative serving San Francisco via San Jose to connect the San Francisco Bay Area with the Central Valley, along with, and as conditioned by, the design practices and mitigation strategies, which are described in the Findings of Fact attached hereto as Exhibit A and reflected in the Mitigation Monitoring and

Reporting Program attached hereto as Exhibit B, and which shall be incorporated into and be a part of the approved preferred network alternative.

Section 6. Next Steps. The Authority hereby directs staff to file a Notice of Determination with the State Clearinghouse and to take any other necessary steps to complete the programmatic CEQA process. Based on its consideration and approval of the Pacheco Pass Network Alternative serving San Francisco via San Jose for the HST System, and the preferred alignments and station location options it has identified within this network alternative, the Authority hereby authorizes staff to proceed with the next steps in the environmental review process and the implementation planning for the Pacheco Pass Network Alternative serving San Francisco via San Jose.

CERTIFICATION

The undersigned Chief Executive Officer, or his designee, of the California High-Speed Rail Authority does hereby certify that the foregoing is a full, true, and correct copy of a resolution duly and regularly adopted at a meeting of the California High-Speed Rail Authority held on September 2, 2010.

Dated: 9-20-10

Roelof van Ark
Chief Executive Officer

Vote: 7-0 (Unanimous Vote)
Date: September 2, 2010

o0O0o

APPENDIX F

2010 MITIGATION MONITORING AND REPORTING PLAN

AVAILABLE ON THE CALIFORNIA HIGH-SPEED RAIL AUTHORITY WEBSITE:
http://www.cahighspeedrail.ca.gov/library.aspx

EXHIBIT B

Bay Area to Central Valley High-Speed Train

CEQA Mitigation, Monitoring, and Reporting Plan

Adopted by Resolution No. HSRA 11-11

August 2010

CALIFORNIA
High-Speed Rail Authority

MITIGATION, MONITORING, AND REPORTING PLAN: BAY AREA TO CENTRAL VALLEY HIGH-SPEED TRAIN REVISED FINAL PROGRAM EIR

This mitigation, monitoring, and reporting plan is designed to fulfill Section 21081.6 of the California Environmental Quality Act (CEQA), which requires public agencies to adopt a reporting or monitoring program whenever a project or program is approved that includes mitigation measures identified in an environmental document. The mitigation strategies described below are for a program-level decision and are to be used to avoid, minimize, or reduce any potentially significant environmental impacts. Project-level activities will undergo future environmental analysis as required by NEPA and CEQA tiering from this Revised Final Program EIR (including the 2008 Final Program EIR). As part of these second-tier environmental reviews, the lead agency for each of these projects will use the mitigation strategies identified in the program document as starting points to determine their applicability to a specific project and to develop additional mitigation measures for significant adverse impacts identified in the project-specific analysis. Because all the potential actions and impacts for tiered projects cannot be anticipated at a programmatic level, each project needs to select those strategies applicable to the impacts associated with the specific location and type of action. For purposes of CEQA, the mitigation strategies in the Revised Final Program EIR also serve as mitigation measures at a programmatic level. The NEPA/CEQA monitoring process includes review, guidance, and reporting components. The lead agencies for second tier documents will note which applicable programmatic mitigation strategies are being adopted and used for mitigation measures and explain why others are not. The lead agencies will provide a schedule for implementing the adopted mitigation measures and for reviewing the implementation of those measures.

As a programmatic-level document, the Revised Final Program EIR (including the 2008 Final Program EIR) does not analyze site-specific impacts of potential alignments or stations; therefore, it cannot predict with certainty which impacts will occur and what site-specific mitigation measures are appropriate for the second-tier level of actions. Consequently, the Revised Final Program EIR (including the 2008 Final Program EIR) describes mitigation strategies that are approaches tailored to address the types of impacts anticipated as a result of construction of the HST system. These strategies will provide the basis to structure more site-specific measures when more detailed data on the impacts is available at the second-tier. In addition, the Authority has committed to design practices and policies that will be used to develop alignment alternatives at the project-level to avoid impacts and to help shape specific mitigation measures.

At this program level of planning, the Authority is responsible for tracking the mitigation and incorporating it into future studies that it undertakes, but a monitoring plan cannot yet be developed. For the next tiers of environmental analysis, a monitoring plan will be developed as part of each project-level analysis that includes more specific timing for the mitigation measures, and additional parties may be identified with responsibility for implementing the measures.

Resource Area	Impact Area	Mitigation Measure
Traffic and Circulation	Traffic and circulation	Require that HST system stations serve as multi-modal transportation hubs providing easy connection to local/regional bus, rail and transit services, as well as providing bicycle and pedestrian access.
		Require the HST system to be grade-separated from all roadways to allow vehicular traffic to flow without impediment from the HST system.
		Work with local and regional agencies to develop and implement transit-oriented development strategies, as described in Chapter 6, around HST stations.
		Work with local and regional agencies to identify, plan, coordinate, and implement traffic flow improvements around HST station locations during project-level planning. Such improvements may include: a. construction phasing and traffic management plan for construction periods b. minimizing closure of any proximate freight or passenger rail line or highway facility during construction c. widening of roadways d. installation of new traffic signals e. improving capacity of local streets with upgrades in geometrics such as providing standard roadway lane widths, traffic controls, bicycle lanes, shoulders and sidewalks f. modifications at intersections, such as signalization and/or capacity improvements (widening for additional left-turn and/or through lanes), and turn prohibitions g. signal coordination and optimization (including retiming and rephasing) h. designation of one-way street patterns near some station locations i. truck route designations j. coordinate with Caltrans regarding nearby highway facilities
		Work with public transportation providers to coordinate services and to increase service and/or add routes, as necessary, to serve the HST station areas.
		Use one-way streets and traffic diversion to alternate routes. Additional regional strategies include: a. coordination with regional transportation (highway and transit) planning (e.g., regional transportation plans b. congestion management plans c. freeway deficiency plans d. Intelligent Transportation Systems Strategies (ITS)

Resource Area	Impact Area	Mitigation Measure
		Require a Transportation Impact Analysis be prepared for the degradation of level of service for three northbound segments (between Southside Drive and Senter and between Blossom Hill and Bernal) of a four-lane Monterey Highway between Southside Drive and Bailey Road at the project-level to evaluate specific impacts and identify mitigation measures. At the program level, mitigation strategies may include: a. optimizing signal timings (for the revised traffic volumes and capacity) b. synchronizing signals (Coordinating the timing of the signals between successive intersections, and automatically adjusting the traffic signals to facilitate the movement of vehicles through the intersections. This will help in reducing overall stops and delays. This works well if the distance between adjacent signals is a quarter of a mile or less). c. selectively adding new turn lanes at intersections. (For example, adding two left-turn lanes instead of an existing single left-turn lane. The traffic analysis will show which intersections would require additional turn lanes. Adding turn lanes would be much more economical/affordable than adding whole lanes.) d. promoting more transit usage in the corridor by increasing frequency of popular transit services.
	Parking	Avoid parking impacts by developing and coordinating implementation at the project-level of parking improvement strategies consistent with local policies, including shared parking, off-site parking with shuttles, parking and curbside use restrictions, parking permit plans for neighborhoods near HST stations, and other parking management strategies.
Air Quality	Localized air quality impacts due to congestion/traffic near HST stations	Assure that HST stations are multi-modal hubs and include appropriate parking, including increased parking for carpools, bicycles, and other alternative transportation methods.
		Coordinate with local and regional public transportation providers to increase opportunities for connection between the HST system and other public transportation services.
		Increase use of alternative-fueled vehicles.
		Work with local and regional agencies to implement local street and roadway improvements, including various traffic flow improvements and congestion management techniques, and parking management strategies to reduce localized pollution from traffic related to the HST system.
	Short-term air quality impacts due to construction	Water all active construction areas at least twice daily.
		Require that all trucks hauling soil, sand, and other loose materials be covered or maintain at least two feet of freeboard.
		Pave, apply water three times daily, or apply non-toxic soil stabilizers on all unpaved access roads, parking areas and staging areas at active construction sites.
		Sweep daily (with water sweepers) all paved access roads, parking areas and staging areas at active construction sites.
		Sweep nearby streets daily (with water sweepers) if visible soil materials from HST system construction are carried onto adjacent public streets.
		Hydroseed or apply non-toxic soil stabilizers to inactive construction areas (previously graded areas inactive for ten days or more).
		Enclose, cover, water twice daily or apply non-toxic soil binders to exposed stockpiles of dirt, sand, etc.
		Limit traffic speeds on unpaved roads to 15 mph

Resource Area	Impact Area	Mitigation Measure
		Install sand bags or other erosion control measures to prevent silt runoff to public roads.
		Replant vegetation in disturbed areas as quickly as possible.
		Use alternative fuels for construction equipment when feasible.
		Minimize equipment idling time.
		Maintain properly tuned equipment.
Noise and Vibration	Increased noise from train operations and construction	Grade separations to eliminate grade crossing related noise.
		Noise barriers, such as sound walls, where there are severe noise impacts.
		Require noise reduction in HST equipment design and track structures design.
		Use of enclosures or walls to surround noisy equipment, and installation of mufflers on engines; substitution of quieter equipment or construction methods, minimizing time of operation and locate equipment farther from sensitive receptors.
		Where not already included, consider placing alignment sections in tunnel or trenches or behind berms where possible and where other measures are not available to reduce significant noise impacts.
		Suspend construction between 7:00 pm and 7:00 am and/or on weekends or holidays in residential areas where there are severe noise impacts.
		In managing construction noise take into account local sound control and noise level rules, regulations and ordinances.
		Ensure that each internal combustion engine would be equipped with a muffler of a type recommended by the manufacturer.
		Specify the use of the quietest available construction equipment where appropriate and feasible.
		Turn off construction equipment during prolonged periods of non-use.
		Require contractors to maintain all equipment and to train their equipment operators.
		Locate noisy stationary equipment away from noise sensitive receptors.
	Exposure to ground-borne vibration	Specify the use of train and track technologies that minimize ground vibration such as state of the art suspensions, resilient track pads, tie pads, ballast mats or floating slabs.
		Phase construction activity, use low impact construction techniques and avoid use of vibrating construction equipment where possible to avoid vibration construction impacts.
Energy	Increased energy use and electricity demand with the HST system	HST stations will be multi-modal hubs providing linkage for various transportation modes, which will contribute to increased efficiency of energy use for intercity trips and by commuters, and the stations will be required to be constructed to meet Title 24 California Code of Regulations energy efficiency standards.
		Design practices will require that the electrically powered HST technology be energy efficient, include regenerative braking to reduce energy consumption, and minimize grade changes in steep terrain to reduce energy consumption
		Design practices will require that localized impacts be avoided through planning and design of the power distribution system for the HST System.
	Energy use during construction of the HST system	Develop and implement a construction energy conservation plan.
		Use energy efficient construction equipment and vehicles.
		Locate construction material production facilities on-site or in proximity to project construction sites.

Resource Area	Impact Area	Mitigation Measure
		Develop and implement a program encouraging construction workers to carpool or use public transportation for travel to and from construction sites.
		Develop potential measures to reduce energy consumption during operation and maintenance activities.
Electromagnetic Fields and Electromag-netic Interference	Exposure of electromagnetic fields to HST system workers, passengers, and nearby residents, schools and other facilities	Use standard design practices for overhead catenary power supply systems and vehicles, including appropriate materials, location and spacing of facilities and power supply systems to minimize exposure to receptors over distance, and shielding with vegetation and other screening materials.
		Design overhead catenary system, substations, and transmission lines to reduce the electromagnetic fields to a practical minimum.
	Electromagnetic interference with electronic and electrical devices	Design the overhead catenary system, substations, and transmission lines to reduce the electromagnetic fields to a practical minimum.
		Design the project component to minimize arcing and radiation of radiofrequency energy.
		Choose devices generating radiofrequency with a high degree of electromagnetic compatibility.
		Where appropriate, add electronic filters to attenuate radiofrequency interference.
		Relocate receiving antennas and use antenna models with greater directional gain where appropriate, particularly for sensitive receptors near the HST system.
		Comply with the FCC regulations for intentional radiators, such as the proposed HST wireless systems.
		Establish safety criteria and procedures and personnel practices to avoid exposing employees with implantable medical devices to EMF levels that may cause interference with such implanted biomedical devices.
Land Use	Long-term land use compatibility impacts with HST operations	Continue to apply design practices to minimize property needed for the HST system and to stay within or adjacent to existing transportation corridors to the extent feasible.
		Work with local governments to consider local plans and local access needs, and to apply design practices to limit disruption to communities. Access may need to be modified, including possible over or undercrossings, where land acquisition results in a division of a farm or other land use.
		The Authority will seek agreements with freight rail operators (UP and/or BNSF) to utilize portions of the existing rail right-of-way to the greatest feasible extent.
		Work with local governments to enhance multi-modal connections for HST stations.
		Coordinate with cities and counties to ensure that HST facilities would be consistent with land use planning processes and zoning ordinances.
		Provide opportunities for community involvement early in project-level studies.
		Hold design workshops in affected neighborhoods to develop understanding of vehicle, bicycle, and pedestrian linkages in order to preserve those linkages through use of grade-separated crossings and other measures.
		Ensure that connectivity is maintained across the rail corridor (pedestrian/bicycle and vehicular crossings) where necessary to maintain neighborhood integrity.
		Develop facility, landscape and public art design standards for HST corridors that reflect the character of adjacent affected neighborhoods.

Resource Area	Impact Area	Mitigation Measure
		Maintain high level of visual quality of HST facilities in neighborhood areas by implementing such measures as visual buffers, trees and other landscaping, architectural design and public artwork.
		Work with local governments to establish requirements for station area plans and opportunities for transit-oriented development. Local governments would play a significant role in implementing station area development by adopting plans, policies, zoning provisions, and incentives for higher densities, and by approving a mix of urban land uses. Station area TOD development principles to be applied at the project level for each HST Station include higher density development, mix of land uses, pedestrian-oriented design, context-sensitive building design, and parking limits and preferences.
		Select station locations that are multi-modal transportation hubs with a preference for traditional city centers.
		Adopt HST station area development policies and principles that require TOD, and promote value-capture at and around station areas as a condition for selecting a HST station site.
		Provide incentives for local governments where potential HST stations may be located to prepare and adopt Station Area Plans and to amend City and County General Plans that incorporate station area development principles in the vicinity of HST stations.
		Give priority to stations for which the city and/or county has adopted station area TOD plans and general plans that focus and prioritize development on the TOD areas rather than on auto-oriented outlying areas.
		The Authority will undertake a comprehensive economic study in the Central Valley of the kinds of businesses that would uniquely benefit from being located near HST station areas, including an estimate of the kinds and numbers of jobs that such businesses would create.
		The Authority will work with local governments, interested agencies and organizations, and provide funding and technical support, along with other partners, to build upon blueprint processes, to focus on supporting downtowns and increasing transit ridership, to increase development densities in the vicinity of HST station areas, and to assist in developing a vision with local partners as to how HST can encourage further in-fill development in Central Valley cities and support environmentally and economically sustainable future growth.
	Short-term land use compatibility impacts from HST construction	Develop a traffic management plan to reduce barrier effects during construction.
		To the extent feasible maintain connectivity during construction.
Agricultural Lands	Conversion of prime, statewide important, and unique farmlands, and farmlands of local importance, to project uses	Avoid farmland whenever feasible during the conceptual design stage of the project.
		Reduce the potential for impacts by sharing existing rail rights-of-way where feasible or by aligning HST features immediately adjacent to existing rail rights-of-way.
		Reduce the potential for impacts by reducing the HST right-of-way width to 50 feet in constrained areas.
		Coordinate with private agricultural land trusts, local programs, mitigation banks, and Resource Conservation Districts to identify additional measures to limit important farmland conversion or provide further protection to existing important farmland.

Resource Area	Impact Area	Mitigation Measure
		The Authority, or other entities designated and supported by the Authority will acquire, from willing sellers, agricultural conservation easements encompassing at least 3,500 acres of important farmland (as defined by the FMMP). The eventual locations and total acreage for these easements would be determined in consultation with the California Department of Conservation, and others, and in conjunction with project-level decisions of the HST system.
	Severance of prime, statewide important, and unique farmlands, and farmlands of local importance, to project uses	Avoid farmland whenever feasible during the conceptual design stage of the project
		Minimize severance of agricultural land by constructing underpasses and overpasses at reasonable intervals to provide property access
		Work with landowners during final design of the system to enable adequate property access
		Provide appropriate severance payments to landowners.
Aesthetics and Visual Resources	Long-term visual quality impacts due to operation	At the project-level, design proposed facilities that are attractive in their own right and that would integrate well into landscape contexts, so as to reduce potential view blockage, contrast with existing landscape settings, light and shadow effects, and other potential visual impacts.
		Design bridges and elevated guideways with graceful lines and minimal apparent bulk and shading effects.
		Design elevated guideways, stations, and parking structures with sensitivity to the context, using exterior materials, colors, textures, and design details that are compatible with patterns in the surrounding natural and built environment, and that minimize the contrast of the structures with their surroundings.
		Use neutral colors and dulled finishes that minimize reflectivity for catenary support structures, and design them to fit the context of the specific locale.
		Use aesthetically appropriate fencing along rights-of-way, including decorative fencing, where appropriate, and use dark and non-reflective colors for fencing to reduce visual contrast.
		Where at-grade or depressed route segments pass through or along the edge of residential areas or heavily traveled roadways, install landscape treatments along the edge of the right-of-way to provide partial screening and to visually integrate the right-of-way into the residential context.
		Use the minimum amount of night lighting consistent with that necessary for operations and safety.
		Use shielded and hooded outdoor lighting directed to the area where the lighting is required, and use sensors and timers for lights not required to be on all the time.
		Design stations to minimize potential shadow impacts on adjacent pedestrian areas, parks, and residential areas, and site all structures in a way that minimizes shadow effects on sensitive portions of the surrounding area.
		Seed and plant areas outside the operating rail trackbed that are disturbed by cut, fill or grading to blend with surrounding vegetated areas, where the land will support plants. Use native vegetation in appropriate locations and densities.
		Use strategic plantings of fast-growing trees to provide partial or full screening of elevated guideways where they are close to residential areas, parks, and public open spaces.
		Where elevated guideways are located down the median strips or along the edge of freeways or major roadways, use appropriate landscaping of the area under the guideway to provide a high level of visual interest. Landscaping in these area should use attractive shrubs and groundcovers, and emphasize the use of low-growing species to minimize any additional shadow effects or blockage of views.

Resource Area	Impact Area	Mitigation Measure
		Plan hours of construction operations and locate staging sites to minimize impacts to adjacent residents and businesses.
		Screen construction sites, as appropriate, to minimize visual construction impacts.
	Short-term visual quality impacts due to construction	Plan hours of construction operations and locate staging sites to minimize impacts to adjacent residents and businesses.
		Screen construction sites, as appropriate, to minimize visual construction impacts.
Public Utilities		Make adjustments to the HST system alignments and vertical profiles to avoid crossing or using major utility right-of-way or fixed facilities during engineering design.
		If avoidance is not feasible, in consultation and coordination with the utility owner, relocate or protect in place transmission lines, substations, and any other affected facilities.
		For acquisition projects which result in utility relocation, follow the uniformity and equitable treatment policies, and comply with the requirements, of the Uniform Relocation Assistance and Real Property Acquisition Policies Act of 1970 for all property necessary for the proposed HST system.
Hazardous Materials and Wastes		Investigate soils and groundwater for contamination and prepare environmental site assessments when necessary and consult with Department of Toxic Substance Control (DTSC) and California Department of Conservation, Division of Oil, Gas, and Geothermal Resources (DOGGR) about sites of concern.
		Design realignment of the HST corridors to avoid identified sites.
		Relocate HST associated facilities such as stations to avoid identified sites.
		Remediate identified hazardous materials and hazardous waste contamination.
		Prior to demolition of buildings for project construction, survey for lead-based paint and asbestos-containing materials.
		Follow BMP's for testing, treating, and disposing of water, and acquire necessary permits from the regional water quality control board, if ground dewatering is required.
		When indicated by project level environmental site assessments, perform Phase II environmental site assessments in conformance with the ASTM Standards related to the Phase II Environmental Site Assessment Process to identify specific mitigation measures.
		Prepare a Site Management Program/Contingency Plan prior to construction to address known and potential hazardous material issues, including a. Measures to address management of contaminated soil and groundwater; b. Site-specific Health and Safety Plan (HASP), including measures to protect construction workers and general public; and c. Procedures to protect workers and the general public in the event that unknown contamination or buried hazards are encountered.
		As part of the second-tier environmental review, consider impacts to the environment on sites identified on the Cortese list (Government Code section 65962.4) at that time.
Cultural and Paleontological Resources	Impacts to archaeological resources and traditional cultural	Avoid the impact, or when avoidance cannot be accommodated, minimize the scale of the impact.
		Incorporate the site into parks or open space.
		Cap or cover the site before construction.

Resource Area	Impact Area	Mitigation Measure
	properties	Provide data recovery for the archaeological resources, which may include excavation of an adequate sample of the site contents so that research questions applicable to the site can be addressed.
		Develop procedures for fieldwork, identification, evaluation, and determination of potential effects to archaeological resources in consultation with SHPO and Native American tribes. Procedures may include on-site monitoring when sites are known or suspected of containing Native American human remains and be reflected in Memoranda of Agreement with appropriate bodies.
		Coordinate and consult with tribal representatives.
	Impacts to historic properties/ resources	Avoid the impact through project design. Prepare and utilize a treatment plan for protection of historic properties/resources that would describe methods to preserve, stabilize, shore/underpin, and monitor buildings, structures, and objects.
		Avoid high vibration construction techniques in sensitive areas.
		Record and document cultural resources that would be adversely affected by the project to the standards of the Historic American Building Survey or Historic American Engineering Record.
		Develop design guidelines to ensure sympathetic, compatible, and appropriate designs for new construction.
		Consult with architectural historians or historical architects to advise on appropriate architectural treatment of the structural design of proposed new structures. Prepare interpretive and/or educational materials and programs regarding the affected historic properties/resources. Materials may include: a popular report, documentary videos, booklets, and interpretive signage.
		Make interpretive information available to state and local agencies, such as salvage items, historic drawings, interpretive drawings, current and historic photographs, models, and oral histories. Also assist with archiving and digitizing the documentation of the cultural resources affected, and disseminating material to the appropriate repositories.
		Relocate and rehabilitate historic properties/resources that would otherwise be demolished because of the project.
		Monitor project construction to ensure it conforms to design guidelines and any other treatment procedures agreed to by the parties consulting pursuant to Section 106 of the National Historic Preservation Act. Repair inadvertent damage to historic properties/resources in accordance with the Secretary of the Interior's Standards for Treatment of Historic Properties.
		Salvage selected decorative or architectural elements of the adversely affected historic properties/resources, and retain and incorporate salvaged items into new construction where possible. If reuse is not possible, make salvaged items available for use in interpretive displays near the affected resources or in an appropriate museum.
		Implement an agreement with appropriate bodies specifying procedures for addressing historic resources which may be affected by the HST system.
		Evaluate the Keeling Shade Trees to determine if the resource is eligible for listing on the National Register of Historic Places. If eligible, determine whether the project would have an adverse effect under Section 106. If an adverse effect occurs, avoid the trees through project design or fill in existing gaps where specimens have died or are dying to offset removal of specimens by the project.
	Impacts to paleontological	Educate workers.
		Recover fossils identified during the field reconnaissance.

Resource Area	Impact Area	Mitigation Measure
	resources	Monitor construction.
		Develop protocols for handling fossils discovered during construction, such as temporary diversion of construction equipment so that the fossils could be recovered, identified, and prepared for dating, interpreting, and preserving at an established, permanent, accredited research facility.
Geology and Soils	Seismic hazards	Design structures to withstand anticipated ground motion, using design options such as redundancy and ductility.
		Prevent liquefaction and resulting structural damage and traffic hazards using: (1) ground modification techniques such as soil densification; and (2) structural design, such as deep foundations.
		Utilize motion sensing instruments to provide ground motion data and a control system to temporarily shut down HST operations during or after an earthquake to reduce risks.
		Design and engineer all structures for earthquake activity using Caltrans Seismic design Criteria.
		Design and install foundations resistant to soil liquefaction and settlement.
		Identify potential serpentinite bedrock disturbance areas and implement a safety plan.
		Apply Section 19 requirements from the most current Caltrans Standard Specifications to ensure geotechnically stable slopes are planned and created.
		Install passive or active gas venting systems and gas collection systems in areas where subsurface gases are identified.
		Remove corrosive soil and use corrosion protected materials in infrastructure.
		Address erosive soils through soil removal and replacement, geosynthetics, vegetation, and or rip/rap, where warranted.
		Remove or moisture condition shrink/swell soils.
		Utilize stone columns, grouting, and deep dynamic compaction in areas of potential liquefaction.
		Utilize buttress berms, flattened slopes, drains, and/or tie-backs in areas of slope instability.
		Avoid settlement through preloading, use of stone columns, deep dynamic compaction, grouting, and/or special foundation designs.
	Surface rupture hazards	Install early warning systems triggered by strong ground motion associated with ground rupture, such as linear monitoring systems (i.e., time domain reflectometers) along major highways and rail lines within the zone of potential rupture to provide early warnings and allow for temporary control of rail and automobile traffic to avoid and reduce risks.
		Continue to modify alignments to avoid crossing known or mapped active faults within tunnels.
		Avoid active faults to the extent possible. Where avoidance is not possible, cross active faults at grade and perpendicular to the fault line.
	Slope instability	Install temporary and permanent slope reinforcement and protection, based on geotechnical investigations, and review of proposed earthwork and foundation excavation plans.
		Conduct geotechnical inspections during construction to verify that no new, unanticipated conditions are encountered.
		Incorporate slope monitoring in final design.

Resource Area	Impact Area	Mitigation Measure
	Difficulty in excavation	Identify areas of potentially difficult excavation to ensure safe practices.
		Focus future geotechnical engineering and geologic investigations in areas of potentially difficult excavation.
		Monitor conditions during and after construction.
		Employ tunnel excavation and lining techniques to ensure safety.
	Hazards related to oil and gas fields	Follow federal and state Occupational Safety and Health Administration regulatory requirements for excavations.
		Consult with other agencies such as the Department of Conservation's Division of Oil and Gas, or the Department of Toxic Substances Control regarding known areas of concern.
		Use safe and explosion-proof equipment during construction.
		Test for gases regularly.
		Install monitoring systems and alarms in underground construction areas and facilities where subsurface gases are present.
		Install gas barrier systems.
Hydrology and Water Resources	Impacts on floodplains	Avoid or minimize construction of facilities within floodplains where feasible.
		Construct appropriately sized culverts under the trackway to convey anticipated storm flows and to minimize ponding.
		Minimize the footprint of facilities within the floodplain, through design changes or the use of aerial structures and tunnels.
		Restore the floodplain to its prior operation in instances where the floodplain is impacted by construction.
	Impacts on surface waters	Use construction methods and facility designs to minimize the potential encroachments onto surface water resources.
		Minimize sediment transport caused by construction by following best management practices (BMPs) as part of National Pollutant Discharge Elimination System (NPDES) and Storm Water Pollution Prevention Plan requirements that will be included in construction permits. BMPs may include measures such as: a. providing permeable surfaces where feasible; b. retaining and treating stormwater onsite using catch basins and filtering wet basins; c. minimizing the contact of construction materials, equipment, and maintenance supplies with stormwater; d. reducing erosion through soil stabilization, watering for dust control, installing perimeter silt fences, placing rice straw bales, and installing sediment basins; e. maintaining water quality by using infiltration systems, detention systems, retention systems, constructed wetland systems, filtration systems, biofiltration/bioretention systems, grass buffer strips, ponding areas, organic mulch layers, planting soil beds, sand beds, and vegetated systems such as swales and grass filter strips that are designed to convey and treat either fallow flow (swales) or sheetflow (filter strips) runoff.
		Use methods such as habitat restoration, reconstruction of [habitat] onsite, and habitat replacement offsite to minimize surface water quality impacts.
		Comply with mitigation measures included in permits issued under Sections 404 and 401 of the federal Clean Water Act.

Resource Area	Impact Area	Mitigation Measure
		Comply with requirements in the Storm Water Pollution Prevention Plan to reduce pollutants in storm water discharges and the potential for erosion and sedimentation.
		Comply with requirements of Section 10 of the federal Rivers and Harbors Act for work required around a water body designated as navigable and applicable permit requirements.
		Comply with the requirements of a state Streambed Alteration Agreement for work along the banks of various surface water bodies.
		Implement a spill prevention and emergency response plan to handle potential fuel or other spills.
		Where feasible, avoid significant development of facilities in areas that may have substantial erosion risk, including areas with erosive soils or steep slopes.
	Impacts on groundwater	Minimize development of facilities in areas that may have substantial groundwater discharge or affect recharge.
		Apply for, obtain, and comply with conditions of applicable waste discharge requirements as part of project-level review.
		Develop facility designs that are elevated, or at a minimum are permeable, and would not affect recharge potential where construction is required in areas of potentially substantial groundwater discharge or recharge.
		Apply for and obtain a Storm Water Pollution Prevention Plan for grading, with Best Management Practices that would control release of contaminants nears areas of surface water or groundwater recharge. Best Management Practices may include constraining fueling and other sensitive activities to alternative locations, providing drip plans under some equipment, and providing daily checks of vehicle condition.
		Use and retain native materials with high infiltration potential at the ground surface in areas that are critical to infiltration for groundwater recharge.
Biological Resources and Wetlands	Impacts to sensitive habitat and vegetation communities	Utilize existing transportation corridors and rail lines to minimize potential impacts.
		Use large diameter tunnels as part of the design to limit surface access needs in tunnels for ventilation or evacuation, as a method to avoid or limit impacts to vegetation and habitat above tunnels.
		Use in-line construction (i.e., use new rail infrastructure as it is built) in ecological sensitive areas to transport equipment to/from the construction site and to transport excavated material away from the construction to appropriate re-use or disposal sites to minimize impacts from construction access roads on vegetation/habitat.
		Accomplish necessary geologic exploration in sensitive areas by using helicopters to transport drilling equipment and for site restoration to minimize surface disruption.
		Use and reuse excavated materials within the confines of the project.
		Participate in or contribute to existing or proposed conservation banks or natural management areas, including possible acquisition, preservation, or restoration of habitats.
		Revegetate/restore impacted areas, with a preference for on-site mitigation over off-site, and with a preference for off-site mitigation within the same watershed or in close proximity to the impact where feasible.
		Comply with the Biological Resources Management Plan(s) developed or identified during project-level studies, as reviewed by the USFWS, CDFG, and USACE.
		Conduct pre-construction focused biological surveys.

Resource Area	Impact Area	Mitigation Measure
		Conduct biological construction monitoring.
		Undertake plant relocation, seed collection, plant propagation, and outplanting at suitable mitigation sites.
		Prevent the spread of weeds and invasive species during construction and operation by identifying areas with existing weed problems and measures to control traffic moving out of those areas such as cleaning construction vehicles or limiting the movement of fill.
	Impacts to wildlife movement corridors	Construct species specific appropriately sized wildlife underpasses, bridges, and/or large culverts, to facilitate known wildlife movement corridors.
		Ensure that wildlife crossings are of a design, shape, and size to be sufficiently attractive to encourage wildlife use.
		Provide appropriate vegetation to wildlife overcrossings and undercrossings to afford cover and other species requirements.
		Establish functional corridors to provide connectivity to protected land zoned for uses that provide wildlife permeability.
		Design protective measures for wildlife movement corridors using the following process in consultation with resource agencies: a. Identify the habitat areas the corridor is designed to connect b. Select several species of interest from the species present in the area c. Evaluate the relevant needs of each selected species d. For each potential corridor, evaluate how the area will accommodate movement by each species of interest e. Draw the corridors on a map f. Design a monitoring program
		Utilize existing transportation corridors and rail lines to minimize potential impacts.
		Use aerial structures or tunnels to allow for unhindered crossing by wildlife.
	Impacts to non-wetland jurisdictional waters	Utilize existing transportation corridors and rail lines to minimize potential impacts.
		Return degraded habitat to pre-existing conditions.
		Create new habitat by converting non-wetland habitats into wetland or other aquatic habitat.
		Enhance existing habitats by increasing one or more functions through activities such as plantings or non-native vegetation eradication.
		Provide for passive revegetation by allowing a disturbed area to revegetate naturally.
		Purchase credits in an existing wetlands or aquatic habitat mitigation bank.
		Provide in-lieu fee payments to an agency or other entity who will provide aquatic habitat conservation or restoration.
		Prefer on-site mitigation over off-site mitigation, and for off-site mitigation prefer that located within the same watershed or as close in proximity to the area of impact as possible.
	Impacts to wetlands	Utilize existing transportation corridors and rail lines to minimize potential impacts.
		Return degraded habitat to pre-existing conditions.
		Create new habitat by converting non-wetland habitats into wetland or other aquatic habitat.

Resource Area	Impact Area	Mitigation Measure
		Enhance existing habitats by increasing one or more functions through activities such as plantings or non-native vegetation eradication.
		Provide for passive revegetation by allowing a disturbed area to revegetate naturally.
		Purchase credits in an existing wetlands or aquatic habitat mitigation bank.
		Provide in-lieu fee payments to an agency or other entity who will provide aquatic habitat conservation or restoration.
		Develop and implement measures to address the “no net loss” policy for wetlands.
		Prefer on-site mitigation over off-site mitigation, and for off-site mitigation prefer that located within the same watershed or as close in proximity to the area of impact as possible.
	Impacts to marine and anadromous fishery resources	Utilize existing transportation corridors and rail lines to minimize potential impacts.
		Comply with the terms of a Streambed Alteration Agreement for work along banks of surface water bodies.
		Implement a spill prevention and emergency response plan to handle potential fuel or other spills.
		Incorporate bio-filtration swales to intercept runoff.
		Where feasible, avoid significant development of facilities in areas that may have substantial erosion risk, including areas with erosive soils and steep slopes.
	Impacts to special status species	Utilize existing transportation corridors and rail lines to minimize potential impacts.
		Relocate sensitive species.
		Conduct seed collection and plant propagation for sensitive plant species.
		Conduct pre-construction focused surveys.
		Conduct biological construction monitoring.
		Restore suitable breeding and foraging habitat.
		Purchase credits from an existing mitigation bank.
		Participate in an existing Habitat Conservation Plan.
		Phase construction around the breeding season.
	Impacts to protected habitats and conservation areas	Conduct focused surveys of biological resources within areas of the GEA directly affected by HST tracks and faculties, including sensitive habitats, and special-status plant and wildlife species.
		Conduct project-level evaluation of biological resources in the GEA to determined impacts from construction, operation, and maintenance, including, but not limited to, ecosystem fragmentation impacts, impacts to wildlife movement corridors, impacts to waterfowl flight patterns, noise impacts, startle and vibration impacts, collision impacts, electrocution impacts, glare impacts, water quality and water flow impacts, impacts on waterfowl nesting breeding, impacts on migratory habits, impacts from construction traffic, impacts of equipment storage and laydown areas, impacts from blasting and pile-driving, and impacts from temporary disruption of water supply deliveries.
		Minimize the footprint of necessary HST facilities to the extent feasible in the HST alignment crossing the GEA.
		The Authority commits to construct an elevated structure along an approximate three-mile portion of Henry Miller Road to minimize impacts on sensitive areas, including wetlands and habitat.

Resource Area	Impact Area	Mitigation Measure
		Consult with the CDFG, the USFWS, and Grassland Water District, in evaluating the timing of construction activities within the GEA and in developing measures to minimize disturbance during nesting and flooding seasons.
		Consult with CDFG, USFWS, and the Grassland Water District, on non-glare and directed lighting and appropriate measures to avoid disturbance impacts to sensitive species in areas of the GEA directly affected by proposed HST facilities.
		The Authority, or other entities designated and supported by the Authority will acquire, from willing sellers, agricultural, conservation and/or open space easements encompassing at least 10,000 acres and generally located along or in the vicinity of the HST alignment and within or adjacent to the designated GEA. The focus for these easements will be in areas undergoing development pressures, such as the areas around Los Banos and Volta, and/or areas that would be most appropriate for ecological conservation or restoration. The eventual locations and total acreage for these easements would be determined in consultation with the CDFG, the USFWS, and the Grassland Water District and in conjunction with project-level decisions addressing the Gilroy to Merced portion of the HST system.
Public Parks and Recreation Resources	Impacts to parks and recreational resources	Continue to apply design practices to avoid impacts to park resources, and when avoidance cannot be accommodated, minimize the scale of the impact
		Apply measures at the project level to reduce and minimize indirect/proximity impacts as appropriate for the particular sites affected, while avoiding other adverse impacts (e.g., visual), such as noise barriers, visual buffers and landscaping.
		Apply measures to modify access to/egress from the recreational resource to reduce impacts to these resources.
		Design and construct cuts, fill, and aerial structures to avoid and minimize visual impacts to units of the state park system.
		Incorporate wildlife under or over crossings at appropriate intervals as necessary.
		Where public parklands acquired with public funds would be acquired for non-park use as part of the HST system, commit as required by law to providing funds for the acquisition of substantially equivalent substitute parkland or to acquiring/providing substitute parkland of comparable characteristics for construction impacts.
		Restore affected park lands to natural state and replace or restore affected park facilities.
		If park facilities must be relocated, provide planning studies as well as appropriate design and replacement with minimal impact on park use.
		Use local native plants for revegetation.
		Develop and implement construction practices, including scheduling, to limit impacts to wildlife, wildlife corridors and visitor use areas within public parks.
		For temporary unavoidable loss of park and recreation facility uses consider providing compensation.
Union Pacific Railroad (UPRR) Freight Operations	Impacts on UPRR freight operations	Construct grade separation in the form of an HST aerial flyover or underpass to preserve access to existing rail spurs and branch lines.
		Consolidate consecutive spur tracks that occur over a short distance to minimize the need for multiple grade separations.
		Relocate team tracks to the opposite side of the UPRR in locations where they conflict with HST. A team track is a small railroad siding or spur track intended for the use of area merchants, manufacturers, farmers and other small businesses to personally load and unload products and merchandise, usually in smaller quantities.

Resource Area	Impact Area	Mitigation Measure
		For silo or quarry operations, provide new loading/unloading facilities with augers and conveyors that pass over or under the HST alignment to a siding on the UPRR mainline that alleviates the need for a UPRR spur to cross the HST.
		To the extent possible, the schedule for construction will be coordinated with existing rail operators to minimize impacts to existing operations.
Cumulative	Impacts on traffic and circulation and travel conditions	See Traffic and Circulation above.
	Impacts on air quality	See Air Quality above.
	Impacts on noise and vibration	See Noise and Vibration above.
	Impacts on land use and planning, communities and neighborhoods, property, and environmental justice	See Land Use above.
	Impacts on agricultural lands	See Agricultural Lands above.
	Impacts on aesthetics and visual resources	See Aesthetics and Visual Resources above.
	Impacts on public utilities	See Public Utilities above.
	Impacts on cultural and paleontological resources	See Cultural and Paleontological Resources above.
	Impacts on geology and soils	See Geology and Soils above.
	Impacts on hydrology and water resources	See Hydrology and Water Resources above.
	Impacts on biological resources and wetlands	See Biological Resources and Wetlands above.
	Impacts on Section 4(f) and 6(f) resources (public parks and recreational resources)	See Public Parks and Recreation Resources above.

Resource Area	Impact Area	Mitigation Measure
	Impacts on UPRR freight operations	See UPRR Freight Operations above.

APPENDIX **G**

2008 BAY AREA TO CENTRAL VALLEY FEDERAL RAILROAD ADMINISTRATION RECORD OF DECISION

AVAILABLE ON THE CALIFORNIA HIGH-SPEED RAIL AUTHORITY WEBSITE:
http://www.cahighspeedrail.ca.gov/library.aspx

U.S. Department of Transportation
Federal Railroad Administration

Record of Decision
Bay Area to Central Valley High-Speed Train

1. Introduction

The California High-Speed Rail Authority (Authority) and the Federal Railroad Administration (FRA), an operating administration of the U.S. Department of Transportation, prepared a joint programmatic environmental impact report/environmental impact statement (EIR/EIS) to evaluate a broad corridor between the Bay Area and Central Valley for the California High-Speed Train (HST) system (Program EIR/EIS herein discussed). As a joint document, the EIR/EIS was prepared in compliance with both the California Environmental Quality Act (CEQA) and the National Environmental Policy Act (NEPA). The Authority is the state lead agency for purposes of compliance with CEQA and the FRA is the lead Federal agency for purposes of compliance with NEPA.

In November 2005, the Authority and FRA approved the statewide HST system program for intercity travel in California between the major metropolitan centers of Sacramento and the San Francisco Bay Area in the north, through the Central Valley, to Los Angeles and San Diego in the south. The system, proposed by the Authority, is about 800-miles long, with electric propulsion and steel-wheel-on-steel-rail trains capable of maximum operating speeds 220 miles per hour (mph) (354 kilometers per hour [kph]) on a mostly dedicated system of fully grade-separated, access-controlled steel tracks and with state-of-the-art safety, signaling, communication, and automated train control systems. As part of the November 2005 decision on the statewide HST system, the Authority and FRA selected, for further project-level study and implementation planning, a series of alignments and station locations for the HST system.

The Authority and the FRA have prepared a programmatic environmental document under CEQA and NEPA to support selection of a preferred network alternative, preferred alignments and station location options within the broad corridor between and including the Altamont Pass and the Pacheco Pass to connect the Bay Area and Central Valley. The Program EIR/EIS builds on, and tiers from, the prior California High Speed Train Program EIR/EIS (statewide program EIR/EIS herein discussed) for the HST system, and Authority and FRA's decision in November of 2005. Specifically, the current Program EIR/EIS builds from the Authority's prior decisions, articulated in Authority Resolution No. 05-01, that approved the Statewide HST System Program, defined the HST as a steel wheel/steel rail system with maximum speeds of up to 220 mph (354 kph), and selected corridor alignments and station location options. The current Program EIR/EIS also tiers from the prior statewide program EIR/EIS by incorporating the design practices and mitigation strategies identified in that document and approved by the Authority for the HST System Program.

At the same time that the current Program EIR/EIS builds on and tiers from the statewide program EIR/EIS, it is itself a first tier, programmatic EIR/EIS under CEQA and NEPA. The focus of the analysis is the programmatic environmental impacts associated with different network alternatives to connect the Bay Area to the Central Valley for the HST system. The network alternatives and station location options are defined conceptually, and the level of detail for the impacts analysis and the mitigation strategies is commensurately broader and more general than found in a typical site-specific project EIS.

The Council on Environmental Quality's (CEQ) NEPA implementing regulations regarding Tiering (CEQ - 40 CFR § 1508.28) state that: "'Tiering' refers to the coverage of general matters in broader environmental impacts statements (such as a national program or policy statements) with subsequent narrower statements or environmental analyses (such as regional or basinwide program statements or ultimately site-specific statements) incorporating by reference the general discussions and concentrating solely on the issues specific to the statement subsequently prepared. Tiering is appropriate when the sequence of statement or analysis is: … (b) From an environmental impact statement on a specific action at an early stage (such as need and site selection) to a supplement (which is preferred) or a subsequent statement or analysis at a later stage (such as environmental mitigation). Tiering in such cases is appropriate when it helps the lead agency to focus on the issues which are ripe for decision and exclude from consideration issues already decided or not yet ripe." The use of tiering under NEPA, and the consideration of the Bay Area to Central Valley portion of the HST system in a separate first tier, program EIS allows the Authority and FRA to focus on the broad policy choices that are ripe for decision, including:

1. Which proposed network alternative and alignment alternatives should connect the San Francisco Bay Area to the Central Valley for the HST system; and

2. Which station location options along the selected network alternative should be chosen.

This Record of Decision (ROD) makes decisions selecting certain conceptual HST corridors, alignments, and station options with regard to the Bay Area to Central Valley HST system, at the programmatic phase of environmental review. These conceptual HST corridors, alignments, and station options will subsequently be evaluated at the project phase of environmental review in site-specific detail. In making this decision, FRA considered the information, and analysis, contained in the Draft and Final Program EIR/EIS for the Bay Area to Central Valley HST system, public and agency comments, and the Authority's decision documents on the Final Program EIR/EIS. To minimize potential future environmental harm from cumulative implementation of the proposed HST system, in this ROD the FRA adopts the design practices and mitigation strategies included in the Mitigation Monitoring and Reporting Plan (MMRP) included as Appendix A.

This ROD has been drafted in accordance with the CEQ's regulations implementing the National Environmental Policy Act (NEPA), (40 CFR § 1505.2) and FRA Environmental Procedures (64 Fed. Reg. 28545, May 26, 1999).

In summary, this ROD provides background on the proposed HST system and the NEPA tiering process and describes the factors considered by the FRA in making this decision.

The ROD identifies the alignment alternatives, network alternatives, and station options considered by the FRA. The ROD also summarizes the environmental benefits and adverse impacts associated with the preferred network alternative, and further identifies and describes measures to minimize harm as a result of adverse environmental impacts. Finally, the ROD summarizes the FRA and Authority responses to comments received on the Final Program EIR/EIS.

2. Record of Decision Contents

Section ..... Page
1. Introduction 1
2. Record of Decision Contents 4
3. Background 6
4. FRA's Role in the HST Program 9
5. Purpose and Need for the Proposed Action 9
5.1 Purpose 9
5.2 Statewide Need 10
5.3 Regional Need 11
6. Alternatives Considered 13
6.1 HST Alternatives Eliminated from Further Consideration During the Scoping Phase 16
6.2 Alternatives Considered in the Program EIR/EIS 19
6.3 Preferred Pacheco Pass Network Alternative, Preferred Alignment Alternatives and Station Location Options 25
6.4 Environmentally Preferable Alternative 27
7. Summary of Statewide HST Environmental Benefits 27
8. Summary of Potential Environmental Benefits and Adverse Impacts for Bay Area - Central Valley Study Area 29
8.1 Traffic and Circulation 29
8.2 Air Quality 30
8.3 Noise & Vibration 31
8.4 Energy 32
8.5 Electromagnetic Fields and Electromagnetic Interference 32
8.6 Land Use, Communities, Property and Environmental Justice 33
8.7 Agricultural Lands 35
8.8 Aesthetics and Visual Resources 35
8.9 Public Utilities 36
8.10 Hazardous Materials and Wastes 37
8.11 Cultural and Paleontological Resources 37
8.12 Geology and Soils 38
8.13 Hydrology and Water Quality Impacts 38
8.14 Biological Resources and Wetlands 40
8.15 Public Parks, Recreation, and 4(f) Resources 41
8.16 Cumulative Impacts 43
8.17 Growth-Inducing Effects 44
9. Measures to Minimize Harm 49
9.1 Design Practices 49
10. Relationship to Other Plans 50
11. Compliance with Other Federal Regulations 53
11.1 Section 4(f) and 6(f) Approvals 53
11.2 Section 106 of the National Historic Preservation Act 53
11.3 Section 404 of the Clean Water Act 53

11.4 Endangered Species Act 54
12. Comments Received on the Final Program EIR/EIS 54
12.1 U.S. Environmental Protection Agency 54
12.2 Union Pacific Railroad, Scott D. Moore 57
12.3 California Department of Fish and Game—Central Region, W.E. Loudermilk 58
12.4 Stuart M. Flashman 60
12.5 Juliana Michael 62
13. Corrections to the Final Program EIR/EIS 62
14. Factors Considered in Making This Decision 63
15. Decision 66

3. Background

The Authority is the agency of California state government charged under California law (California Public Utilities Code § 185000 et seq.) with the exclusive responsibility for planning, construction, and operation of high-speed passenger train service at speeds exceeding 125 miles per hour. The Authority was created pursuant to state legislation in 1996 to develop a plan for the construction, operation, and financing of a statewide, intercity high-speed passenger train system offering intercity service (California Public Utilities Code § 185000 et seq.). The Authority's enabling legislation, Senate Bill (SB) 1420 (chaptered 9/24/96, Chapter 796, Statute of 1996), defines high-speed rail as "intercity passenger rail service that utilizes an alignment and technology that makes it capable of sustained speeds of 200 miles per hour (mph) (320 kilometers per hour [kph]) or greater." Based on the results of initial feasibility studies, the Authority advanced the evaluation of a proposed HST system as the logical next step in the development of California's transportation infrastructure.

In June 2000, the Authority adopted the final business plan (Business Plan) (California High Speed Authority 2000) describing an economically viable HST system over 700 miles long (1,127-kilometers). This system would be capable of speeds in excess of 200 miles per hour (mph) (322 kilometers per hour [kph]) and would travel on a mostly dedicated system with fully grade-separated tracks with state-of-the-art safety, signaling, and automated train control systems. As such, the HST would connect and serve the major metropolitan areas of California, extending from Sacramento and the San Francisco Bay Area through the Central Valley to Los Angeles and San Diego. Such a system would be expected to carry a minimum of 42 million passengers annually, representing 32 million intercity trips and 10 million commuter trips, by the year 2020 and would have revenues in excess of operations and maintenance costs.

At the beginning of the first EIR/EIS process for the HST program, in order to describe a proposed HST system and alternatives for analysis in the EIR/EIS, the Authority and FRA reviewed previous studies and considered the purpose and need of the HST system. Given the anticipated scope of the project, the Authority and the FRA determined that the appropriate initial California Environmental Quality Act (CEQA) and NEPA document for the proposed HST system would be a programmatic EIR/EIS, considering the comprehensive nature and scope of the HST system, to support conceptual decision-making. The programmatic level of environmental review allows for the broadest disclosure of impacts, and has provided the opportunity for the Authority, the FRA, and the public to consider alternatives to an HST system, and different conceptually defined HST corridor alignment and station options. Analyzing a proposed large-scale transportation system at the conceptual planning stage also provides the Authority and FRA with the best opportunity to develop design practices and mitigation strategies to avoid and minimize identified impacts.

The statewide program EIR/EIS was the first phase of a tiered environmental review process, and was prepared for the first and programmatic-level of review and consideration of early policy decisions on the HST system. The statewide program

EIR/EIS was prepared to support decisions about whether to pursue a high speed train system, involving steel-wheel-on-steel-rail technology; and which of the conceptual corridors, alignments, and station options evaluated in the Program EIR/EIS would be eliminated from consideration and which would be selected for further consideration in the tiered environmental reviews to be prepared subsequent to the statewide program EIR/EIS.

In November 2005, following a programmatic environmental review process, the Authority and the FRA approved the HST system program for intercity travel in California between the major metropolitan centers of Sacramento and the San Francisco Bay Area in the north, through the Central Valley, to Los Angeles and San Diego in the south. As part of this decision, the Authority and the FRA selected, for further project-level study and implementation planning, a series of alignments and station locations for the HST system. For the section of the HST system connecting the Bay Area and the Central Valley, the Authority directed staff to prepare a separate Program EIR/EIS to identify a preferred alignment within the broad corridor between and including the Altamont Pass and the Pacheco Pass.

NEPA requires that an agency consider the environmental effects of its actions at the earliest point in time when the analysis is meaningful, and it is within the agencies' discretion to fashion an environmental process appropriate to the type of decisions they are considering. The statewide and Bay Area and Central Valley Program EIR/EIS include first-tier analyses that shape the parameters for future site-specific environmental analysis and documentation, which will be conducted in the subsequent second-tier of environmental review. The second-tier analysis will build upon the foundation of the first-tier, allowing for more detailed study based on refined engineering design to shape subsequent necessary project decisions. The second-tier project-level environmental reviews will fully describe site-specific environmental impacts of project alternatives within selected corridors and at station locations carried forward from the Program EIR/EIS, and will define and analyze site-specific and appropriate mitigation measures to address localized environmental impacts.

Pursuant to the requirements of NEPA and CEQA, a comprehensive public and agency involvement effort was conducted as part of the program environmental process. Public and agency involvement was accomplished through a variety of means, including the following: scoping process that included a series of public and agency scoping meetings; consultation meetings with federal and state resource agency staff representatives throughout the environmental process; informational meetings with interest groups and agencies; presentations and briefings to a broad spectrum of interest groups; information materials; the Authority's Web site (www.cahighspeedrail.ca.gov) presenting information about the proposed project; noticed public meetings of the Authority's governing board at which key policy issues and decisions were raised and discussed and opportunities for public comment were provided; public circulation of the Draft Bay Area to Central Valley Program EIR/EIS; and posting on the Authority's website, including public information sessions and eight public hearings on the Draft Bay Area to Central Valley Program EIR/EIS, as well as written comments received during the public comment period from July 20, 2007 to October 26, 2007; and public circulation of the Final Bay Area to Central Valley Program EIR/EIS. The FRA's website was linked to the Authority's website throughout the program environmental process.

As part of the agency involvement in the environmental process, the U.S. Environmental Protection Agency (USEPA) and U.S. Army Corps of Engineers (USACE) served as cooperating agencies under NEPA for the preparation of the Program EIR/EIS. The USEPA and the USACE have participated in the development of both the Draft and Final Program EIR/EIS and, in accordance with the June 12, 2006, Interagency Memorandum of Understanding among federal agencies and the Authority for the programmatic, or Tier 1, environmental review, were consulted concerning the selection of the corridor and alignments most likely to yield the Least Environmentally Damaging Practicable Alternative (LEDPA). The USEPA and USACE have concurred that the Preferred Network Alternative described in this ROD is most likely to yield the least environmentally damaging practicable alternative (LEDPA) under Section 404 of the Clean Water Act (CWA).

The announcement of the availability of the Draft and Final Bay Area to Central Valley Program EIR/EIS and the Authority's website listed the 14 libraries within the project area having a hard copy of the documents available for review. Participating libraries were located in the following cities: Fremont, Gilroy, Livermore, Merced, Modesto, Mountain View, Oakland, Palo Alto, Pleasanton, Sacramento, San Francisco, San Jose, Stockton, and Tracy. The federal cooperating agencies and other selected agencies received an announcement letter from the Authority, a hard copy of the Draft Program EIR/EIS, and a CD copy of the document with appendices. Sixty-six other affected public agencies received an announcement letter from the Authority, an Executive Summary, and a CD copy of the document with appendices. Sixty Native American tribal representatives received an announcement letter from the Authority, an Executive Summary, and a CD copy of the document with appendices. Eighty-two elected officials received an announcement letter from the Authority and an Executive Summary. A distribution list for the Draft Program EIR/EIS was included in the Draft Program EIR/EIS. The general public was informed of the Draft Program EIR/EIS release through distribution of an announcement of the document's availability to the project mailing list. The announcement also provided the details for submitting comments by mail or fax and announced dates, times, and locations of public hearings. The mailing list contained approximately 3,600 statewide contacts, including federal, state, and local elected officials; federal, state, and local agency representatives; chambers of commerce; environmental and transportation organizations; special interest groups; media; private entities; and members of the public. The Program EIR/EIS was also made available for viewing and downloading at the Authority's web site, www.cahighspeedrail.ca.gov. Comments were accepted directly from the website as well. The website also provided the opportunity to request a CD ROM or printed copies of the document.

The release of the Draft Bay Area to Central Valley Program EIR/EIS and the release of the Final Bay Area to Central Valley Program EIR/EIS were also announced through a display advertisement distributed in 10 statewide newspapers. The display ads were published in the following newspapers: *Sacramento Bee, Daily Republic, Oakland Tribune, San Francisco Examiner, San Jose Mercury News, Modesto Bee, Merced Sun Star, Fresno Bee, Stockton Record, and Tracy Press*. In addition, a second advertisement was placed in the San Francisco Chronicle announcing the Authority Board Meetings in July when the Board would consider certifying the Final Program EIR and adopting decision documents.

A Notice of Availability of the Final Bay Area to Central Valley Program EIR/EIS was published in the Federal Register by the Environmental Protection Agency on May 30, 2008. The Final Program EIR/EIS was distributed similarly to the Draft Program EIR/EIS. Those that commented on the Draft Program EIR/EIS were added to the distribution list. The Authority Certified the Bay Area to Central Valley HST Program EIR/EIS in accordance with CEQA on July 9, 2008.

4. FRA's Role in the HST Program

The FRA is serving as the lead Federal agency for the preparation of the joint State/Federal environmental review of the HST program. As the lead Federal agency, the FRA is responsible for the form and content of the EIS, which has been prepared cooperatively with the Authority as a joint document to serve both NEPA and CEQA.

The FRA anticipates that portions of the HST project could be eligible for receipt of future federal funds that may be administered by the FRA. The nature of these federal funding programs, including eligibility requirements and award availability, would be determined in accordance with possible future Congressional appropriations, and as such are unknown at this time.

In addition to administering possible future funding, the FRA is likely to require a Rule of Particular Applicability to establish safety standards for the proposed HST system. Such a rule could be established for operating speeds over 200 mph (322 kph) and for operations in shared-use rail corridors.

5. Purpose and Need for the Proposed Action

5.1 Purpose

The Authority's statutory mandate (California Public Utilities Code § 185000 et seq.) is to plan, build, and operate an HST system that is coordinated with the state's existing transportation network, particularly intercity rail and bus lines, commuter rail lines, urban rail transit lines, highways, and airports. The Authority adopted the following specific objectives and policies for the proposed statewide HST system that respond to this mandate, lead to the definition of the project purpose and were considered in the definition and evaluation of alternatives in the Program EIR/EIS:

- Provide intercity travel capacity to supplement critically over-utilized interstate highways and commercial airports.
- Meet future intercity travel demand that will be unmet by present transportation systems and increase capacity for intercity mobility.
- Maximize intermodal transportation opportunities by locating stations to connect with local transit, airports, and highways.

- Improve the intercity travel experience for Californians by providing comfortable, safe, frequent, and reliable high-speed travel.
- Provide a sustainable reduction in travel time between major urban centers.
- Increase the efficiency of the intercity transportation system.
- Preserve environmental quality and protect California's sensitive environmental resources by reducing emissions and vehicle miles traveled (VMT) for intercity trips.
- Consult with resource and regulatory agencies during the Tier 1, programmatic environmental review and use all available information for assessing the alternative that is most likely to yield the least damaging, practicable alternative by avoiding sensitive natural resources (wetlands, habitat areas, conservation areas) where feasible.
- Maximize the use of existing transportation corridors and rights-of-way, to the extent feasible.
- Develop a practical and economically viable transportation system that can be implemented in phases by 2020, which would generate revenues in excess of operations and maintenance costs.

The purpose of the selected HST system was defined in the first statewide program EIR/EIS. *The purpose of the proposed HST system is to provide a reliable mode of travel that links the major metropolitan areas of the state and delivers predictable and consistent travel times. A further purpose is to provide an interface with commercial airports, mass transit, and the highway network and relieve capacity constraints of the existing transportation system as increases in intercity travel demand in California occur, in a manner sensitive to and protective of California's unique natural resources.*

In the Program EIR/EIS the purpose was appropriately focused on the alternative selected with the statewide program EIR/EIS and the Bay Area to Central valley study region. *The purpose of the Bay Area to Central Valley HST is to provide a reliable high-speed electrified train system that links the major Bay Area cities to the Central Valley, Sacramento, and Southern California, and that delivers predictable and consistent travel times. Further objectives are to provide interfaces between the HST system and major commercial airports, mass transit, and the highway network and to relieve capacity constraints of the existing transportation system in a manner sensitive to and protective of the Bay Area to Central Valley region's and California's unique natural resources.*

5.2 Statewide Need

The capacity of California's intercity transportation system is insufficient to meet existing and future demand, and the current and projected future congestion of the system will continue to result in deteriorating air quality, reduced reliability, and increased travel times. The system has not kept pace with the tremendous increase in population and tourism in the state. The interstate highway system, commercial airports, and conventional passenger rail system serving the intercity travel market are currently operating at or near capacity and will require large public investments for maintenance

and expansion in order to meet existing demand and future growth over the next 20 years and beyond. Moreover, the ability to expand many major highways and key airports is uncertain; some needed expansions may be impractical or may be constrained by physical, political, and other factors. Simply stated, the *need* for improvements serving intercity travel within California relates to the following issues:

- Future growth in demand for intercity travel. Intercity travel in California is forecasted to increase up to 63% over the next 20 years, from 155 million trips to more than 253 million trips (see Chapter 1 of the statewide program EIR/EIS).
- Capacity constraints that will result in increasing congestion and travel delays. Travel between the downtowns of Los Angeles and San Francisco is anticipated to increase by one hour for autos and 30 minutes for air travel over the next 20 years (see Chapter 1 of the statewide program EIR/EIS).
- Unreliability of travel stemming from congestion and delays, weather conditions, accidents, and other factors that affect the quality of life and economic well-being of residents, businesses, and tourism in California. From 1990 to 2020, the Bay Area Regional Transportation Plan forecasts a 249% increase in average daily vehicle hours of delay (see Chapter 1 of the statewide program EIR/EIS).
- Increasing frequency of accidents on intercity highways and passenger rail lines in congested corridors of travel.
- Reduced mobility as a result of increasing demand on limited modal connections between major airports, transit systems, and passenger rail in the state.
- Poor and deteriorating air quality and pressure on natural resources as a result of expanded highway and airports. Meeting federal and state air quality standards over the next 20 to 40 years will require reductions in the total distance traveled by vehicles, integration of land use and transportation planning and development, development of transportation demand strategies, implementation of operational improvements, and use of new technologies that improve transportation efficiencies and provide a transportation alternative to the single-occupant automobile (see Chapter 1 of the statewide program EIR/EIS).

5.3 Regional Need

The needs of the Bay Area to Central Valley region are similar to those identified for the statewide HST system.

Regional Growth

By 2050, the nine-county Bay Area region's population is anticipated to grow by more than 40%, reaching a total of 10 million people. This population growth will put tremendous pressure on the existing transportation network, and the peak travel periods are expected to encompass significantly more hours of the day. For example, the Metropolitan Transportation Commission’s (MTC's) 2000 San Francisco Bay Crossing Study projected the Bay Bridge peak period to more than double from 1.5 hours in 2000 to 3.5 hours by 2020.

Additionally, growth in the region occurs in the form of dispersed land uses. Such decentralized land uses force residents to rely heavily on individual vehicles for most trips. Without improved and more extensive mass transportation systems, such as the HST system, leading to and connecting the main Central Valley cities, there will be little chance for these cities to affect compact transit-oriented development (TOD) that would mitigate adverse growth effects. TOD is an articulated goal of multiple regional and local jurisdictional land use, transportation, and redevelopment plans throughout the state, promulgated by Bay Area and Central Valley regional and local governments. TOD provides a variety of environmental and lifestyle benefits, including less travel time for multiple trip purposes (e.g., trips to/from work, shopping, entertainment, and education). TOD also contributes to a reduction in VMT, which helps to achieve emissions reduction and global warming goals.

Regional Congestion

The Bay Area already experiences the second-worst traffic congestion in the country, after Los Angeles. Congestion is expected to worsen over the next 25 years, especially in existing hotspots. The combination of significant population growth, dispersed development patterns (requiring a car for most trips), highway facilities that cannot keep pace with traffic demands, and large increases in interregional commuting, has worsened and will continue to worsen congestion levels and the associated environmental and economic impacts.

Economic Implications

The adverse economic impacts of congestion and inadequate transportation/transit access are already apparent. The 150,000 daily hours of Bay Area commute congestion had an estimated cost of $2.6 billion in 2003 alone. When transportation access to urban and suburban centers becomes too difficult, employers are likely to move jobs to areas where land prices are lower and workers' commutes might be shorter. Without better passenger rail access, major job growth will continue to decentralize and move to the Central Valley or other outlying areas, further increasing personal vehicle reliance, contributing to congestion, increasing commute times and shifting regional economic bases.

Environmental Implications

Without an expanded rail and transit network and more compact development, there may be greater adverse effects on the natural environment. More than 400,000 acres (ac) of land in the Bay Area are at risk from future development. Promoting development in walkable communities near HST, intermodal, and other transit stations offers the best opportunity for taking development pressure off open space and farms. Demand for an additional 550,000 homes near transit in the Bay Area by 2030 is anticipated, but TOD functions well only when transit service is sufficiently frequent and reliable that residents can reduce the length and the number of car trips they take.

An additional growing environmental concern is global climate change, and the transportation sector is responsible for about 40% of greenhouse gas emissions in California and up to 50% in the Bay Area. Because these emissions are directly proportional to the amount of fuel burned, offering effective and efficient transportation choices results in reduced driving and reduced emissions.

6. Alternatives Considered

A portion of the proposed HST system selected in the statewide program EIR/EIS (November 2005) was further evaluated in the Bay Area to Central Valley Program EIR/EIS. The selected HST system is electrified steel-wheel-on-steel-rail dedicated service, with a maximum speed of 220 mph (350 kph) and a fully grade-separated, access-controlled right-of-way that in some areas would share tracks at lower speeds with other compatible passenger rail services. Shared-track operations would use existing rail infrastructure in areas where construction of new separate HST facilities would not be reasonable or feasible. Although shared service would reduce the flexibility and capacity of HST service because of the need to coordinate schedules, it would also result in fewer environmental impacts and a lower construction cost.

The selected HST system includes "corridors [that] are conceptually described and represent routes for an over 800-mile long system providing for high-speed intercity passenger rail service between the major metropolitan areas of Sacramento and the San Francisco Bay Area in Northern California, through the Central Valley, to the Los Angeles area and Orange County and to San Diego via the Inland Empire." (statewide program EIR/EIS ROD, p. 3) In the statewide program EIR/EIS ROD (p.14), FRA selected for the Bay Area to Central Valley portion of the HST system:

> "A broad preferred corridor between the Bay Area and the Central Valley containing a number of feasible route options within which further study will permit the identification of a single preferred alignment option. This corridor is generally bounded by (and includes) the Pacheco Pass (SR-152) to the south, the Altamont Pass (I-580) to the north, the BNSF Corridor to the east, and the Caltrain Corridor to the west (Highway route numbers are provided only as a convenient reference for the reader, not as a limitation on the corridor to be considered). The future additional study will also further consider the selected alignments and station locations in the Bay Area described below.
>
> <u>San Francisco Peninsula</u>: Caltrain Corridor with potential stations at downtown San Francisco (Transbay Terminal), SFO (Millbrae), and Redwood City or Palo Alto.
>
> <u>East Bay Alignment</u>: "Hayward Line to I-880" alignment with potential stations at Oakland (West Oakland) or 12th Street/City Center, Union City, and San Jose."

As a tiered environmental document, alternatives considered in the Program EIR/EIS are an integral part of the HST system selected with the statewide program EIR/EIS, which would provide HST services along corridor alignments connecting station locations from San Francisco and Sacramento in the north through the Central Valley to Los Angeles and San Diego in the south. The Program EIR/EIS did not further evaluate alignments and station locations outside of the study region defined in the November 2005 ROD that would connect the alternatives considered to Sacramento in the north and Los Angeles in the south. The implications and changes to the HST system related to choices of alignments and station locations in the Bay Area to Central Valley study region were described in the Program EIR/EIS and are addressed in this ROD.

Informed by previous studies and the scoping process, the Authority and the FRA evaluated potential HST alignment alternatives and station location options in the Bay Area to Central Valley study region and defined those that best meet the statewide project purpose and objectives of the HST system.

The Authority and FRA conducted a screening evaluation to identify potential alignment alternatives and station location options in line with the statewide purpose that were anticipated to be practicable, reasonable, and feasible for further consideration in the Program EIR/EIS. The screening evaluation included the following activities:

- Review of alignment alternatives and station location options identified in previous studies in the study region. (See Chapter 2, Program EIR/EIS.)
- Identification of alignment alternatives and station location options not previously evaluated.
- Evaluation of alignment alternatives and station location options using standardized engineering, environmental, and financial criteria and evaluation methodologies listed below. (See Chapter 2, Program EIR/EIS.)
- Evaluation of alignment alternatives and station location options against defined objectives listed above. (See Chapters 2, 7, and 8, Program EIR/EIS.)

The alignment and station-screening evaluation, along with public and agency input, together provided the Authority and the FRA with the necessary information to identify a reasonable range of alignment, station location, and HST corridor options.

Table 1 presents the relationship of objectives and criteria applied in the screening evaluation. The objectives and criteria used in this evaluation represent further refinement of those used in previous studies and also incorporated the HST system performance goals and criteria. Alignment alternatives and station location options were considered and compared based on these established objectives and criteria:

Table 1
High-Speed Rail Alignment and Station Evaluation Objectives and Criteria

Objective	Criteria
Maximize ridership/revenue potential	Travel time Length Population/employment catchment area
Maximize connectivity and accessibility	Intermodal connections
Minimize operating and capital costs	Length Operational issues Construction issues Capital cost Right-of-way issues/cost
Maximize compatibility with existing and planned development	Land use compatibility and conflicts Visual quality impacts

Objective	Criteria
Minimize impacts on natural resources	Water resources impacts Floodplain impacts Wetland impacts Threatened and endangered species impacts
Minimize impacts on social and economic resources	Environmental justice impacts (demographics) Farmland impacts
Minimize impacts on cultural and parks/wildlife refuge resources	Cultural resources impacts Parks and recreation impacts Wildlife refuge impacts
Maximize avoidance of areas with geologic and soils constraints	Soils/slope constraints Seismic constraints
Maximize avoidance of areas with potential hazardous materials	Hazardous materials/waste constraints

At the scoping phase, some alignment alternatives and station location options were considered and removed from further study. Based on the above objectives and criteria, the Authority and FRA determined that certain alignment alternatives were impracticable or unreasonable based on infeasibility or anticipated environmental impacts.

- For most of the alignment alternatives and station location options not carried forward in the Program EIR/EIS, failure to meet the articulated project purpose, need and objectives or practicability constraints were the primary reasons for elimination.
- General project purpose and objectives were considered in terms of ridership potential, connectivity and accessibility, incompatibility with existing or planned development, and severe operational constraints.
- Environmental criteria were considered a reason for elimination when an alignment alternative or station location option had considerably more probable environmental impacts, based on geographic, population or ecosystem characteristics, than other practicable alignment alternatives or station location options for the same corridor.
- Practicability constraints were considered in terms of cost, constructability, right-of-way constraints, and other technical issues.
- Specific thresholds were established to help guide the evaluation of tunnel constructability. Continuous tunnel lengths of more than 12 mi (19 km) were considered impracticable based on constructability, project scheduling, and the seismic characteristics and associated dangers in the region, The crossing of major fault zones at grade was also identified as a necessary criterion to minimize threat to system stability during seismic movement.

6.1 HST Alternatives Eliminated from Further Consideration During the Scoping Phase

The following HST Alignment Alternatives and station location options were considered but rejected from further consideration in the statewide program EIR/EIS for the HST system (California High-Speed Rail Authority and Federal Railroad Administration 2005) and this Program EIR/EIS process. The reasons for elimination of each of the alignments evaluated are categorically summarized in Table 2.

Table 2
Bay Area to Merced: High-Speed Train Alignment Alternatives and Station Location Options Considered and Eliminated in Program EIR/EIS

Alignment or Station	Reason for Elimination							
	Construction	Incompatibility	Right-of-Way	Connectivity/ Accessibility	Revenue/ Ridership	Alignment Eliminated	Environment	Environmental Concerns[1]
San Francisco to San Jose								
US-101 Alignment (exclusive guideway)	P	S	P				P	Visual, land use (right-of-way acquisition) impacts
Caltrain Corridor (exclusive guideway)	P	P	P				P	Visual, land use (right-of-way acquisition), cultural resources impacts
I-280 Alignment	P		P				P	Visual, land use (right-of-way acquisition) impacts
Station Locations								
Millbrae–SFO (US-101)						P		
Redwood City (US-101)						P		
Santa Clara (Caltrain)					P			Station area would be served by Diridon Station only 3 miles away
Oakland to San Jose								
Mulford Line	P	P	P				P	Visual, land use, wetlands, parklands impacts
I-880 (Note: Only Oakland to Fremont portion to be eliminated)	P		P					
Former WPRR Rail Line to Mulford Line (WPRR/Niles/Mulford alignment)	P						P	Wetlands, parklands impacts
Hayward Line via tunnel to Mulford Line (Hayward/Tunnel/Mulford alignment)	P	S	P				P	Wetlands, parklands, land use impacts; seismic constraints
Former WPRR Rail Line via tunnel to Mulford Line (WPRR/Tunnel/Mulford)	P	S	P				P	Wetlands, parklands, land use impacts; seismic constraints

Alignment or Station	Reason for Elimination							
	Construction	Incompatibility	Right-of-Way	Connectivity / Accessibility	Revenue / Ridership	Alignment Eliminated	Environment	Environmental Concerns[1]
Former WPRR Rail Line to Hayward Line to I-880 (WPRR/Hayward/I-880)	P							
Former WPRR (Warm Springs to San Jose)	P		P					
Tunnel under Fremont Central Park	P						S	Seismic constraints, parklands
Station Locations								
Lake Merritt		P		P				
Jack London Square	P			P				
I-880 Hegenberger						P		
Coliseum BART (WPRR)						P		
Mowry Avenue	P					P		
San Jose to Central Valley								
Merced Southern alignment (Central Valley Portion of San Jose-Merced section for Diablo Range Direct alignments)							P	San Luis National Wildlife Refuge impacts
Direct Tunnel Alignment (Northern or Southern Connection to Merced	P						S	Seismic constraints
Diablo Range Direct Alignments (Northern Alignment and alignments through Henry Coe State Park)	P						P	Parklands, habitat fragmentation, high value aquatic resources, visual, noise impacts
Caltrain/Morgan Hill/Foothill/Pacheco Pass Alignment	P	P		P			P	Visual, land use impacts
Caltrain/Morgan Hill/East US-101/Pacheco Pass Alignment		P		P				
Caltrain/Morgan Hill/Pacheco Pass Alignment	P		P					
Station Locations								
Morgan Hill (Foothills)				P		P		
Morgan Hill (east of US-101)				P		P		
Los Banos					P		P	Water resources, threatened and endangered species, growth related impacts

Alignment or Station	Reason for Elimination							
	Construction	Incompatibility	Right-of-Way	Connectivity / Accessibility	Revenue / Ridership	Alignment Eliminated	Environment	Environmental Concerns[1]
East Bay to Central Valley								
SR-84/South of Livermore		S		S			P	Natural resources, habitat and endangered species, agricultural lands, water resources impacts
SR-84/I-580/UPRR		S		S			P	Natural resources, habitat and endangered species, agricultural lands, water resources impacts
I-580: Bay Fair to Pleasanton	P		S					Construction, logistical constraints, right-of-way
Station Locations								
Pleasanton (I-680/SR-84)				S		P		
Livermore (Greenville Rd/SR-84/UPRR)				S		P		
Livermore (Isabel/SR-84)				S		P		
Central Valley Alignments								
West of SR-99				P			P	Farmlands, water resources, floodplains, severance impacts
East of SR-99				P			P	Farmlands, water resources, floodplains, severance impacts

Alignment or Station	Reason for Elimination							
	Construction	Incompatibility	Right-of-Way	Connectivity / Accessibility	Revenue / Ridership	Alignment Eliminated	Environment	Environmental Concerns[1]

Definitions:

Reason: Primary (P) and secondary (S) reasons for elimination.

Construction: Engineering and construction complexity and initial and/or recurring costs would render the project impracticable and logistical constraints.

Environment: High potential for considerable impacts to natural resources, including water resources, streams, floodplains, wetlands, and habitat of threatened or endangered species, would fail to meet project objectives.

Incompatibility: Incompatibility with current or planned local land use as defined in local plans would fail to meet project objectives.

Right-of-Way: Lack of available rights-of-way or extensive right-of-way needs would result in high acquisition costs and/or delays that would render the project impracticable.

Connectivity/Accessibility: Limited connectivity with other transportation modes (aviation, highway, and/or transit systems) would impair the service quality, could reduce ridership of the HST system, and would fail to meet the project purpose.

Ridership/Revenue: The alignment/station would result in longer trip times and/or have suboptimal operating characteristics and would have low ridership and revenue and would fail to meet the project purpose.

Alignment Eliminated: Station or connection eliminated because the connecting alignment was eliminated.

* Alignment Eliminated column applies only to station locations. If an alignment is eliminated, a specific station location may no longer be necessary.

[1] Environmental Concerns are only noted when Environment criteria were a primary or secondary reason for elimination.

6.2 Alternatives Considered in the Program EIR/EIS

No Project Alternative

Under NEPA, FRA is required to consider a no action alternative, which is substantially equivalent to the No Project Alternative that the Authority is required to consider under CEQA, and which evaluates the environmental impacts that would occur if the proposed HST system is not advanced or implemented. The No Project Alternative represents the region's transportation system (highway, air, and conventional rail) as it existed in 1999–2000 and as it would be in 2030 with the addition of transportation projects currently programmed for implementation (already in funded programs/financially constrained plans) according to the State Transportation Improvement Program (STIP), regional transportation plans (RTPs) for all modes of travel, airport improvement plans, and intercity passenger rail plans.

Alignment Alternatives and Station Location Options

To facilitate this analysis, the study area was divided into six corridors within the study region:

- San Francisco to San Jose
- Oakland to San Jose

- San Jose to Central Valley
- East Bay to Central Valley
- San Francisco Bay Crossings
- Central Valley Alignment

These corridors connect different parts of the study region and are fundamentally different and distinct in terms of land use, urban and activity centers served (e.g., regional airports), connectivity with other transit services, terrain, and construction configuration (mix of at-grade, aerial structure, and tunnel sections). The HST alignment alternatives and station location options that were considered in each corridor of the study region and that were not eliminated through either screening or scoping are discussed below. These alignment alternatives and station location options all meet the project's stated purpose and need and objectives (shown in Table 1) to varying degrees and were therefore considered as reasonable and practical alternatives and options for detailed environmental evaluation. Assembled into network alternatives (see discussion infra), they represent a reasonable range of alternatives for evaluation under NEPA.

San Francisco to San Jose

Alignment Alternatives Carried Forward

- Caltrain Alignment (Shared-Use Four-Track): From San Francisco, this alignment alternative would follow south along the Caltrain rail alignment to Dumbarton and from there to San Jose. This alignment alternative assumes that the HST system would share tracks with Caltrain commuter trains. The entire alignment would be grade separated. Station location options would include a station in the lower level of the proposed new Transbay Transit Center in San Francisco or a station at 4th and King Streets, a station in Millbrae to serve San Francisco International Airport (SFO), and a station in either Redwood City or Palo Alto. The Caltrain shared-use alignment would take advantage of the existing publicly owned rail right-of-way and rail infrastructure and would be mostly at-grade. The current rail operator, Caltrain, supports the concept of a shared use commuter rail and HST corridor.

Station Location Options Carried Forward

- Transbay Transit Center: This potential station location would serve the Caltrain shared-use alignment as a downtown terminal station.
- 4th and King (Caltrain): This potential station location would serve the Caltrain shared-use four-track alignment as a downtown terminal station.
- Millbrae: This potential station would serve as a connection with SFO.
- Redwood City (Caltrain): This potential station location would provide accessibility and serve the population between San Jose and San Francisco.
- Palo Alto (Caltrain): This potential station location would provide accessibility and serve the population between San Jose and San Francisco.

Oakland to San Jose

Alignment Alternatives Carried Forward

- Niles Subdivision Line to I-880 (Niles/I-880): From Oakland, this alignment alternative would travel south following the UPRR's Niles Subdivision Line (i.e., Hayward Line) transition to the UPRR's Warm Springs Subdivision (Milpitas Line) at Niles Junction and then transition to the I-880. Station location options include Oakland, Oakland Airport and Union City (BART) or Fremont (Warm Springs) The alignment would be at-grade along the Niles Subdivision Line and on an aerial structure in the median of I-880, consistent with the objective of placing the HSR adjacent to or within existing transportation rights-of-way to minimize impacts. The I-880 HST portion would mostly be on an aerial configuration from Fremont to San Jose. This alignment would require the construction of columns and footings in the wide median of I-880.
- Niles Subdivision Line to I-880 to Trimble Road (Niles/I-880/Trimble Rd.): From Oakland, this alignment alternative would travel south following the UPRR's Niles Subdivision Line (i.e., Hayward Line), transition to the UPRR's Warm Springs Subdivision (Milpitas Line) at Niles Junction and then transition to I-880 and then to Trimble Road. Station location options include Oakland, Oakland Airport, and Union City (BART) or Fremont (Warm Springs) The alignment would be at-grade along the Niles Subdivision Line and on an aerial structure in the median of I-880, consistent with the objective of placing the HST adjacent to or within existing transportation rights-of-way to minimize impacts. The I-880 HST portion would mostly be on an aerial configuration from Fremont to San Jose. The Trimble Road segment would be on an aerial structure and in a tunnel (where adjacent to San Jose International Airport). This alignment would require the construction of columns and footings in the wide median of I-880.

Station Location Options Carried Forward

- West Oakland: This potential station location would serve Oakland the Niles/I-880 Alignment.
- 12th Street/City Center: This potential station location would serve Oakland from the Niles/I-880 Alignment
- Coliseum/Airport BART Station: This potential station location would serve the Oakland Airport from the Niles/I-880 Line.
- Union City (BART): This potential station location would serve the population centers between Oakland and San Jose from the Niles/ I-880 Line.
- Fremont (Warm Springs): This potential station location would serve the population centers between Oakland and San Jose from the Niles/ I-880 Line.

San Jose to Central Valley

Alignment Alternatives Carried Forward

- Caltrain/Pacheco/Henry Miller Avenue: This alignment alternative would extend south along the Caltrain/UPRR rail corridor through the Pacheco Pass and a portion of the Grasslands Ecological Area (GEA) along Henry Miller Road and then across the San Joaquin Valley. The alignment would be adjacent to or within the

railroad and highway rights-of-way and placed in tunnels over the Pacheco Pass to minimize project impacts. Station location options include the existing San Jose (Diridon) Station and Gilroy (near the existing Caltrain Station) or Morgan Hill (near the existing Caltrain Station).

- Caltrain/Pacheco/GEA North/Merced: This alignment alternative would extend south along the Caltrain/UPRR rail corridor through the Pacheco Pass, pass through the northern portion of the GEA and then across the San Joaquin Valley. Station location options include the existing San Jose (Diridon) Station and Morgan Hill (near the existing Caltrain Station) or Gilroy (near the existing Caltrain Station).

Station Location Options Carried Forward

- San Jose (Diridon): This potential station location would serve all alignments (Caltrain/Monterey Highway rights-of-way) out of San Jose.
- Morgan Hill (Caltrain): This potential station location would serve all the Pacheco Pass alignment alternatives.
- Gilroy (Caltrain): This potential station location would serve all the Pacheco Pass alignment alternatives.

East Bay to Central Valley

Alignment Alternatives Carried Forward

- UPRR: This alignment alternative would extend east via a relatively direct routing (mostly in tunnel) between Niles Junction and I-680 then use the UPRR alignment through Pleasanton and Livermore, before transitioning to the I-580 corridor through the Altamont Pass to Tracy. The HST alignment would be placed adjacent to or within transportation rights-of-way or in tunnel to minimize impacts. Station location options include the Pleasanton (Bernal/I-680) Station, Livermore (near downtown), or Livermore (Greenville Rd.) and Tracy (downtown) or Tracy (ACE),
- I-580/UPRR: This alignment alternative would extend east via a relatively direct routing (mostly in tunnel) between Niles Junction and I-680 then use the UPRR alignment through Pleasanton before transitioning to the I-580 corridor through Livermore and the Altamont Pass to Tracy. Station location options include the Pleasanton (Bernal/I-680) Station, Livermore (I-580), or Livermore (Greenville Rd.) and Tracy (downtown) or Tracy (ACE). The HST alignment would be placed adjacent to or within transportation rights-of-way or in tunnel to minimize impacts.
.
- I-580/I-680/UPRR: This alignment alternative would extend east via a relatively direct routing (mostly in tunnel) between Niles Junction and I-680 then use the I-680 alignment before transitioning I-580 corridor (at the I-580/I-680 junction). Station location options include the Pleasanton (BART) Station, Livermore (I-580), or Livermore (Greenville Rd.) and Tracy (downtown) or Tracy (ACE). The HST alignment would be placed adjacent to or within transportation rights-of-way or in tunnel to minimize impacts.
- Patterson Pass/UPRR: This alignment alternative would extend east via a relatively direct routing (mostly in tunnel) between Niles Junction and I-680 then adjoin or use the UPRR alignment through Pleasanton and Livermore, before

transitioning to the I-580 corridor through the Patterson Pass between Livermore and Tracy. Station location options include the Pleasanton (Bernal/I-680) Station, Livermore (near downtown), and Tracy (downtown) or Tracy (ACE). The HST alignment would be placed adjacent to or within transportation rights-of-way or in tunnel to minimize impacts.

Station Location Options Carried Forward

- Pleasanton (1-680/Bernal Road): This potential station location would serve the Altamont I-580/UPRR alignment alternative and the Altamont UPRR alignment alternative.
- Pleasanton (BART): This potential station location would serve the Altamont I-580/I-680/UPRR alignment alternative.
- Livermore (Downtown): This potential station location would serve the Altamont UPRR alignment alternative.
- Livermore (I-580): This potential station location would serve the Altamont I-580/I-680/UPRR alignment alternative and the Altamont I-580/UPRR alignment alternative.
- Livermore (Greenville Road/UPRR): This potential station location would serve the Altamont UPRR alignment alternative.
- Livermore (Greenville Road/I-580): This potential station location would serve the Altamont I-580/I-680/UPRR alignment alternative and the Altamont I-580/UPRR alignment alternative.
- Tracy (Downtown): This potential station location would serve all Altamont Pass alignment alternatives.
- Tracy (ACE): This potential station location would serve all Altamont Pass alignment alternatives.

San Francisco Bay Crossings

Alignment Alternatives Carried Forward

- New Transbay Tube: This alignment alternative would connect the Oakland (West Oakland or 12th Street City Center) and San Francisco (Transbay Transit Center or 4th and King) HST stations via a new transbay tube, This alignment alternative could serve either Altamont Pass or Pacheco Pass alignment alternatives.
- Dumbarton Rail Crossing (Centerville): This alignment alternative would serve the Altamont Pass alignment alternatives and link the East Bay to the Peninsula in the vicinity of the existing Dumbarton Rail Bridge. Between Niles Junction and the Dumbarton Bridge, this alignment would use the Centerville rail alignment, Possible designs for this alignment include a new (low level or high level) Rail Bridge or a new transbay tube.
- Dumbarton Rail Crossing (Fremont Central Park): This alignment alternative would serve the Altamont Pass alignment alternatives and link the East Bay to the Peninsula in the vicinity of the existing Dumbarton Rail Bridge, Between Niles Junction and the Dumbarton Bridge, this alignment would use an existing utility alignment and a new alignment through the Don Edwards Natural Wildlife Refuge.

This alignment would require tunneling under Fremont Central Park. Possible designs for this alignment include use of an improved Dumbarton Rail Bridge (low level), a new high-level bridge, and a new transbay tube.

Station Location Options Carried Forward

- Union City (Shinn): This potential station would serve the population centers between Oakland and San Jose only for Altamont Pass (East Bay to Central Valley) alignment alternatives using the Dumbarton Rail Crossing (Centerville) connection to the San Francisco Peninsula.

Central Valley

Alignment Alternatives Carried Forward

- BNSF Rail Line: This alignment alternative would connect with either the Altamont or Pacheco Pass alignment alternatives. This north-south alignment would link the Bay Area to Central Valley population centers, Sacramento, and southern California, Station location options include Modesto (Briggsmore) and Merced (Downtown and Castle AFB).
- UPRR Rail Line: This alignment alternative would connect with either the Altamont or Pacheco Pass alignment alternatives. This north-south alignment would link the Bay Area to Central Valley population centers, Sacramento, and southern California. Station location options include Modesto (Downtown) and Merced (Downtown and Castle AFB).

Station Location Options Carried Forward

- Downtown Modesto: This potential station location would serve the Altamont Pass and Pacheco Pass alignment alternatives using the UPRR alignment alternative.
- Briggsmore (Amtrak): This potential station location would serve Altamont Pass and Pacheco Pass alignment alternatives using the BNSF alignment alternative.
- Downtown Merced: This potential station location would serve all Altamont Pass and Pacheco Pass alignment alternatives.
- Castle AFB: This potential station would serve all Altamont Pass and Pacheco Pass alignment alternatives.

Network Alternatives

To review and evaluate a HST system in the study region as a part of a statewide system, HST network alternatives were identified representing different ways to combine the HST alignment alternatives and station location options. Several operating scenarios for combinations of alignment alternatives and terminus stations were investigated. The network alternatives were developed to enable an evaluation and comparison of how various combinations of alignment alternatives would meet the project's purpose and need and how each would perform as an HST network (e.g., travel times between various station locations, anticipated ridership, operating and maintenance costs, energy consumption, and auto trip diversions). Representative network alternatives are discussed in Chapter 2 of the Program EIR/EIS and listed below.

Altamont Pass Network Alternatives

- San Francisco and San Jose Termini
- Oakland and San Jose Termini
- San Francisco, Oakland, and San Jose Termini
- San Jose Terminus
- San Francisco Terminus
- Oakland Terminus
- Union City Terminus
- San Francisco and San Jose – via SF Peninsula
- San Francisco, San Jose, and Oakland – with no San Francisco Bay Crossing
- Oakland and San Francisco – via Transbay Tube
- San Jose, Oakland, and San Francisco – via Transbay Tube

Pacheco Pass Network Alternatives

- San Francisco and San Jose Termini
- Oakland and San Jose Termini
- San Francisco, Oakland, and San Jose Termini
- San Jose Terminus
- San Jose, San Francisco, and Oakland – via Transbay Tube
- San Jose, Oakland, and San Francisco – via Transbay Tube

Pacheco Pass with Altamont Pass (Local Service) Network Alternatives

- San Francisco and San Jose Termini
- Oakland and San Jose Termini
- San Francisco, Oakland, and San Jose Termini (without Dumbarton Bridge)
- San Jose Terminus

6.3 Preferred Pacheco Pass Network Alternative, Preferred Alignment Alternatives and Station Location Options

Each network alternative was evaluated on the potential ability to help achieve the alignment objectives appearing in Table 1 of this document. The different system characteristics, service areas, connectivity, complex regional geographic and seismic characteristics, as well as environmental factors of the network alternatives presented complex factors and choices to be considered in making a decision. Informed by public review and comment on the Draft Program EIR/EIS, the Authority staff prepared an evaluation for consideration by the Authority board and FRA after the public comment period, which ended October 26, 2007. Chapter 8 of the Final Program EIR/EIS describes the preferred HST network and alignment alternatives and station options as well as specific, detailed evaluations of network alternatives that supported the identification of the preferred network alternative in greater detail than this document. In particular, section 8.3.4 contains a comparison of the Pacheco Pass and Altamont Pass Alternatives in terms of public input, ridership and revenue, capital and operating costs,

travel times/travel conditions, constructability issues and logistical constraints, and environmental impacts.

The Final Program EIR/EIS identified the preferred network alternative as the Pacheco Pass Network Alternative serving San Francisco and San Jose termini (Preferred Pacheco Pass Network Alternative). This preferred alternative includes the following alignment alternatives and station location options. Station locations and alignment alternatives are also described in more detail in Chapter 8 of the Final Program EIR/EIS.

San Francisco to San Jose

Alignment: Caltrain Corridor (Shared Use)

Preferred Station Locations:

- Downtown San Francisco Terminus: Transbay Transit Center
- San Francisco Airport Connector Station: Millbrae (SFO)
- Mid-Peninsula Station: Continue to investigate both Palo Alto and Redwood City as potential sites and work with local agencies and the Caltrain Joint Powers Board (JPB) to determine whether a mid-peninsula station site should be developed.

San Jose to Central Valley

Alignment: Pacheco Pass via Henry Miller Road (UPRR Connection)

Preferred Station Locations:

- Downtown San Jose Terminus: Diridon Station
- Southern Santa Clara County: Gilroy Station (Caltrain)

Central Valley

Alignment: UPRR N/S

- At the project level, continue to evaluate BNSF or some combination of UPRR and BNSF, because of uncertainty of negotiating with the UPRR and the BNSF for use of some of their right-of-way and continue investigation of alignments/linkages to a potential maintenance facility at Castle Air Force Base (AFB).

Preferred Station Locations:

- Modesto: Downtown Modesto
- Merced: Downtown Merced
- Reaffirm that no station would be located between Gilroy and Merced.

Maintenance Facilities:

No maintenance facility would be located at Los Banos. Castle AFB is identified as one of the options for future study for the location of an HST maintenance facility.

6.4 Environmentally Preferable Alternative

The identification of the Preferred Pacheco Pass Network Alternative with San Francisco and San Jose Termini, utilizing the UPRR N/S alignment in the Central Valley, as environmentally preferable over the other representative network alternatives involves a series of tradeoffs and balancing considerations.

In the 2005 ROD for the statewide program EIR/EIS, the Authority and FRA found that taking no action under the No Project Alternative would not meet the intercity travel needs projected for the future (2030 and beyond) as population continues to grow, and would fail to meet the purpose and objectives of the HST program. Considering the updated ridership forecasts developed for this Program EIR/EIS, the FRA and Authority reaffirmed that the HST system statewide, as well as within the Bay Area to Central Valley study region, offers environmental benefits in the areas of traffic, air quality, and energy use, whereas the No Project Alternative would result in increased traffic congestion, deteriorating air quality, and reduced transportation energy efficiency. The Program EIR/EIS No Project Alternative does not meet the purpose and need or project objectives.

Each of the 21 representative network alternatives presents different types and degrees of environmental impact. Each network alternative involves some adverse impacts in the areas of biological resources and wetlands, waterbodies (San Francisco Bay and lakes), noise and vibration, cultural resources, farmland, and parks and/or recreational resources. The basic choice of how to connect the Bay Area to the Central Valley (Pacheco, Altamont, or Pacheco with Altamont) involves environmental impacts in some locations; environmental impacts cannot be altogether avoided with any network alternative.

Each of the 21 representative network alternatives also has varying ability to meet the project purpose and objectives, and varying challenges in terms of feasibility, practicality, and constructability. The selection of a preferred overall network therefore involves the weighing of different types and amounts of environmental impacts in different regional locations, consideration of the ability of each network alternative to meet the purpose and need, and project objectives, and ability of the alternative to be feasibly constructed.

Given the stated purpose and objectives, the Authority and FRA find that the Pacheco Pass Network Alternative is the overall environmentally preferable alternative among the representative network alternatives that meet the project purpose and need by providing service to at least two major urban centers of the Bay Area without presenting significant constructability or feasibility concerns. Detailed analysis of each of the networks alternatives, including the Preferred Pacheco Pass Network Alternative, can be found in Chapter 8 of the Final Program EIR/EIS.

7. Summary of Statewide HST Environmental Benefits

The potential statewide environmental, transportation, land use, economic, and social beneficial effects of the statewide HST system and the Preferred Pacheco Pass Network Alternative are summarized below.

When implemented, the HST system would provide numerous transportation benefits throughout the state of California. The HST system would provide a safe, reliable mode of travel, providing quick, competitive travel times between California's major intercity markets, and link the major metropolitan areas of the state while delivering predictable, consistent travel times sustainable over time.

The HST system would improve connectivity and accessibility to other existing transit modes and airports. Travel to longer distance intercity markets by HST would be comparable to air transportation and less than one half as long as automobile travel times. Travel times for intermediate intercity trips would be faster than either air or automobile transportation, and the HST system would serve more parts of the state than air transportation by bringing frequent HST service to many parts of the state that are not well served by air transportation.

The HST system would be less susceptible to factors influencing reliability because it would operate as a predominantly separate transportation system. The HST system would be grade separated, eliminate travel delays and improve travel times and reliability. Traffic delays at existing at-grade rail crossing would be eliminated where the HST provides a grade separation. HST service and capacity could be expanded with minimal additional infrastructure.

Implementation of the statewide HST system would also significantly benefit the environment. The HST system could lead to a projected 2.3% statewide reduction in VMT on the highway system or 9.74 billion VMT annually. This would decrease air pollutants statewide by reducing pollution generated by automobile combustion engines. Carbon dioxide emissions would be reduced by 3.4 million tons (6.8 billion pounds) annually by 2030. The system would also lower total energy consumption by 5.8 million barrels of oil annually by 2030, as the HST system uses less energy to move passengers than either airplanes or automobiles.

In selecting HST corridors, the Authority has labored to utilize existing transportation corridors wherever feasible. Being within or adjacent to transportation corridors and rail lines would minimize the impacts on California's landscape, wetlands and waterbodies, parks, recreational areas, cultural resources and wildlife refuges to the greatest extent possible.

The statewide HST system would provide other land use benefits by acting as a catalyst for promotion and adoption of smart growth principles in communities near HST stations. The HST would be highly compatible with local and regional plans that support rail systems and TOD and offers opportunities for increased land use efficiency, including higher density development resulting in reduced rates of farmland loss. High density development accommodates more population and employment on less land. As such, the HST system would result in a slight decrease in urban area growth.

The statewide HST system would create economic benefits by providing revenue generated by the system and economic growth generated by construction and operation of the system. The HST system is anticipated to create 450,000 permanent jobs statewide and 160,000 construction related jobs statewide. The HST system could further improve competitiveness of state industries by providing a location advantage in areas in proximity to an HST station through improved accessibility to labor and

customer markets. Land use effects can also lead to increased stock of affordable housing, promotion of job opportunities, reduction in energy consumption, and improved cost-effectiveness of public infrastructure.

Social benefits would be created by improved, reliable intercity, interregional connectivity. Residents of California and the Central Valley would have improved travel options, and the HST would provide travel options for some people who would not otherwise make trips.

8. Summary of Potential Environmental Benefits and Adverse Impacts for Bay Area - Central Valley Study Area

Potential benefits and adverse environmental impacts in the Bay Area to Central Valley region resulting from the Preferred Pacheco Pass Network Alternative are identified in the Final Program EIR/EIS and are summarized in the following sections. Temporary and construction related impacts are addressed in each appropriate resource topic. The Program EIR/EIS considers the potential for environmental impact related to travel conditions, movement of goods, and emergency access. The Program EIR/EIS and the Authority's decision documents on it also discuss design practices and mitigation strategies to reduce adverse environmental impacts. The benefits of the HST system as a whole are also benefits of the Preferred Pacheco Pass Network Alternative in the Bay Area to Central Valley study region. The FRA found that the Preferred Pacheco Pass Network Alternative is environmentally preferable.

8.1 Traffic and Circulation

By providing another mode of intercity travel in the Bay Area to Central Valley region, the HST would improve reliability and increase mobility within the area's transportation system. The Preferred Pacheco Pass Network Alternative best serves the connection between northern and southern California with the greatest potential frequency and capacity, superior connectivity between the South Bay and Southern California, and fewer potential intermediate stops. The HST system would result in traffic improvement in areas where grade separation for the HST system would replace an at-grade crossing that was responsible for periodic local traffic delays. The Preferred Pacheco Pass Network Alternative would result in a reduction in vehicle miles traveled (annual) of about 1.75%, or 716 million VMT, in the Bay Area (Alameda, Contra Costa, San Francisco, San Mateo and Santa Clara Counties) and 8.0%, or 3.69 billion VMT, in the Central Valley (San Joaquin, Stanislaus, Merced, Madera, Fresno, Tulare, Kern and Kings Counties), creating improvements in highway congestion and travel delay.

However, the operation of the HST system would result in increased traffic around HST station locations and increased congestion on highway and roadway segments which would provide access to stations. Additionally, the construction of the HST system would result in short-term impacts of increased traffic in areas affected by the

construction process for the duration of the construction in that area. In a few areas, the HST system would result in closure, either temporary or permanent, of local roadways that in turn would result in increased traffic on nearby roads and longer travel routes for some travelers.

While localized increases in traffic and congestion near HST station areas and during construction are significant at the programmatic level of analysis, mitigation strategies have been identified that can reduce this impact (see page 2 in the MMRP - Appendix A). Adverse impacts related to parking or public transportation are not expected because mitigation strategies have been identified that can avoid these impacts.

8.2 Air Quality

The Preferred Pacheco Pass Network Alternative would result in air quality improvement in the Bay Area to Central Valley study region. The Preferred Pacheco Pass Network Alternative would result in a reduction in VMT (annual) of about 1.75%, or 716 million VMT, in the Bay Area (Alameda, Contra Costa, San Francisco, San Mateo and Santa Clara Counties) and 8.0%, or 3.69 billion VMT, in the Central Valley (San Joaquin, Stanislaus, Merced, Madera, Fresno, Tulare, Kern and Kings Counties). This VMT reduction is expected to relieve highway congestion and result in on-road mobile source emissions reductions within the San Francisco Bay Area and San Joaquin Valley air basins.

Within the Bay Area to Central Valley study region, the HST is expected to reduce the statewide emissions burdens associated with air travel from 0.7% for particulate matter to 3.4% for nitrogen oxides. Carbon dioxide plane emissions are predicted to decrease by approximately 44% on a statewide level. Emissions related to increased HST power demand are expected to increase statewide by 1.2% for criteria pollutants and by 1.8% for carbon dioxide due to increased electrical requirements of the HST system. If it is decided that HST would be run on 100% clean, zero-carbon emissions electricity, there would be no predicted increase in carbon dioxide levels due to the project's increased electrical requirements.

The HST system statewide and in the Bay Area to Central Valley study region would result in an overall decrease in criteria pollutant emissions. Additional air quality improvement would result from congestion relief afforded by the use of HST to the extent that: (1) congested highway traffic would be relieved on intercity highway segments, (2) grade separations for the HST system improve local traffic flow by removing traffic impediments that cause congestion and delays, and (3) public transportation use increases.

The HST system as a whole, and the Preferred Pacheco Pass Network Alternative in the Bay Area to Central Valley study region, would result in beneficial impacts related to greenhouse gas emissions and global climate change. While some increased carbon dioxide may enter the atmosphere due to construction and operation of the HST system statewide, or due to removal of carbon sequestering plants via agricultural land conversion under the Pacheco Pass Alternative, any increases are offset by the reduction of carbon dioxide emissions due to reduced automobile VMT and reduced

airplane travel. The HST system is not only consistent with, but a critical tool for achieving, the State of California mandate to reduce carbon dioxide emissions statewide (Assembly Bill 32). These benefits would be felt within the Bay Area to Central Valley study region.

Under the Preferred Pacheco Pass Network Alternative, areas around certain HST stations would result in permanent increases in traffic and congestion along with a related localized increase in vehicle-generated air pollution. At the program level these localized impacts are considered significant, because of uncertainty, since it is not possible to know the exact location, extent, and characteristics of increased traffic and congestion that will be generated around various HST station sites. While potential localized increases in vehicle-generated air pollution are considered significant at the program level, mitigation strategies have been identified (see pages 2 and 3 in the MMRP - Appendix A) that can reduce this impact to a less-than-significant level.

Construction impacts associated with the HST system within the Bay Area to Central Valley study region are likely to adversely affect air quality include emissions from various activities, such as the use of diesel equipment, soil disturbance, and congestion-related traffic and route changes, all of which are expected to generate temporary short-term localized increases in air pollution. While this impact is considered significant at the program level, mitigation strategies (see pages 2 and 3 in the MMRP - Appendix A) have been identified that can reduce this impact to a less-than-significant level.

8.3 Noise & Vibration

The HST could create long-term noise and vibration impacts along the alignment segments from train operations by creating intermittent increased noise along the Preferred Pacheco Pass Network Alternative. As a newly constructed system, the HST would be far quieter than typical passenger and freight trains. Added noise from the HST would be partially offset in areas with existing grade crossings where existing train associated noise would be reduced because mandatory grade separations would eliminate horn and crossing gate noise for all passing trains utilizing the right-of-way.

Significant noise impact from operations will not occur along the entire Preferred Pacheco Pass Network Alternative alignment. Rather, the impact would be localized, because certain areas would have no sensitive receptors, and because trains speeds are slower in some places leading to lower noise impact ratings. Construction of the HST could also cause short-term construction-related noise impacts. Noise impacts from construction of the project would be generated by heavy equipment used during major construction periods as close as 50 feet from existing structures along the HST alignment and around stations. While operational and construction-related noise impacts are considered significant at the program level, mitigation strategies (see page 3 in the MMRP - Appendix A) have been identified that can reduce this impact to a less than significant level.

The Preferred Pacheco Pass Network Alternative could cause an increase in ground-borne vibrations when the HST passes by an area. The ground-borne vibration impact would not occur along the entire length of the HST alignment due to underground or

tunnel portions and the lack of adjacent sensitive receptors in other areas. The Program EIR/EIS identified that schools, parkland, and residential populations located along the HST alignment may be affected (see Section 3.4 of the Program EIR/EIS). In areas that are sparsely populated there would be a low potential for vibration impacts. Construction activities can also cause some short-term ground-borne vibration. While operational and construction-related vibration impacts are considered significant at the program level, mitigation strategies (see page 4 in the MMRP - Appendix A) have been identified that can reduce this impact to a less than significant level.

8.4 Energy

The statewide HST system would be constructed in phases and is expected to draw power from the statewide electrical grid, which receives power from many sources. The HST system with the Preferred Pacheco Pass Network Alternative would result in an increase in demand on the statewide electricity supply by approximately 794 MW during peak electricity demand periods in 2030. This additional load would represent 0.96% of the statewide electricity demand estimated for 2030. With proper planning and design of the power distribution facilities for the HST system in relation to the overall state electrical grid, localized impacts from providing electricity to the HST system can be avoided. Electric power impacts are not expected because mitigation strategies have been identified (see page 4 in the MMRP - Appendix A) that can avoid these impacts.

Construction of the statewide HST system with the Preferred Pacheco Pass Network Alternative would result in one-time non-recoverable energy consumption costs that would be similar in scale to the energy consumption requirements of the other network alternatives, and would be in addition to energy consumed by the planned transportation improvements included in the No Project Alternative. While energy consumption from construction is considered significant at the program level, mitigation strategies have been identified (see page 4 in the MMRP - Appendix A) that can reduce this impact to a less than significant level.

The result of the construction of the HST system would be a new transportation mode that would reduce annual fuel consumption by 5.8 million barrels of oil as compared to the 2030 No Project Alternative.

8.5 Electromagnetic Fields and Electromagnetic Interference

The operation of the HST system with the Preferred Pacheco Pass Network Alternative could generate additional levels of exposure to electromagnetic fields (EMF) in close proximity to electric power systems. The level of exposure will depend on a number of factors that will vary depending on the final alignments and operations, including design of power supply systems and vehicles, to be decided at the project-level of design. The HST catenary and distribution systems will operate primarily at 60-Hz fields, which is considered an extremely low frequency (ELF). Because of their rapid decrease in strength with distance, EMFs in excess of background levels are likely to be experienced only very near the sources.

There is no scientific consensus that there are adverse effects of low-level EMF. Numerous studies have addressed, but failed to establish, any significant adverse health effects, and various industry, government and scientific organizations with expertise in electromagnetic fields technology have produced a range of voluntary standards that represent their best judgment of what levels are considered safe. The extremely low frequency EMF that would result from the operation of the HST system would be substantially below any of the standards examined by these experts. The EMFs may interfere with HST maintenance workers' implanted biomedical devices, but there is little potential to interfere with implanted biomedical devices of other workers, passengers or nearby residents. Consequently, based on the review of the scientific evidence, the increased levels of EMF as a result of the Preferred Pacheco Pass Network Alternative operation are less-than-significant at a programmatic, system-wide level, without mitigation and design practices/mitigation strategies have been identified (see page 4 in the MMRP - Appendix A) that can avoid or reduce EMF exposure.

The HST would generate incidental radiofrequency (RF) fields, and would also use wireless communications that generate radiofrequency fields. Radiofrequency fields would also be produced at the right of way by intermittent contact (unintentional arcing) between the pantograph power pickup and catenary wire. The Preferred Pacheco Pass Network Alternative would introduce additional electromagnetic interference at levels for which there are no established adverse impacts and RF regulations would be complied with. Design practices/mitigation have been identified that can avoid EMI (see Section 3.6 of the Program EIR/EIS and page 4 of the MMRP - Appendix A).

8.6 Land Use, Communities, Property and Environmental Justice

The Preferred Pacheco Pass Network Alternative would involve laying new track and installing electric power distribution facilities for the HST system and of providing multi-modal transit stations as part of the HST system. Maintenance, storage and cleaning facilities will be part of the HST system, and general potential locations for these facilities were identified to consider representative impacts of such facilities in the program analysis. Locations for these facilities will be determined in conjunction with future project-level studies and decisions on implementation phasing. There are no maintenance and storage facilities considered in the Los Banos area, or in the vicinity of the GEA, as part of the Final Program EIR/EIS, and there would be no HST station between Gilroy and Merced. The Merced (Castle AFB) site has been identified for further study, among other sites, for a location of a maintenance facility.

The Preferred Pacheco Pass Network Alternative has the advantage of fewer station stops through the high-speed trunk of the system between San Francisco or San Jose and Southern California. This would minimize the potential for urban sprawl and result in fewer community impacts. The Preferred Pacheco Pass Network Alternative would also enable the early implementation of the section of the HST system along Caltrain between San Francisco, San Jose, and Gilroy, providing increased accessibility and transportation options within the region.

In developing the alternatives, efforts were made to incorporate alignments and station locations that would be compatible with existing local land use plans and ordinances to

the extent feasible, and two thirds of the Preferred Pacheco Pass Network Alternative alignment would be in or along existing transportation corridors (existing railroad or highway rights-of -way) or in tunnel. Moreover, proposed station locations are proposed as multi-modal transit hubs. Each of these serve to reduce the extent of land acquisition needed for the Preferred Pacheco Pass Network Alternative. Within the Preferred Pacheco Pass Alignment Network, the HST could be incompatible in some areas, including those lying east of Gilroy where the alignment would veer away from the existing transportation corridor through agricultural land and recreational areas and through the GEA. The Authority will continue to apply design practices in future project-level environmental review that seek to minimize land use impacts in agricultural and recreational areas and through the GEA (see pages 5, 6, 14, and 15 of the MMRP - Appendix A).

In some areas, implementation of the Preferred Pacheco Pass Network Alternative could affect land uses by creating a new barrier dividing or disrupting existing communities. However, because the alignment along the San Francisco Peninsula would primarily be within an existing, active commuter and freight rail corridor (Caltrain), it would not constitute any new physical or psychological barriers that would divide, disrupt, or isolate neighborhoods, individuals, or community focal points in the corridor. Throughout much of the Central Valley, the HST alignment would also be adjacent to an existing transportation corridor where there would be little to no neighborhood cohesion impact on communities as a result of the alignment. In larger communities such as Stockton, Modesto, Merced, and Chowchilla, the existing UPRR rail line already divides the community and a parallel, at-grade set of HST tracks would therefore not generally be expected to result in an additional physical separation which exists between land uses on either side of the corridor. Construction of grade separations would have some localized property impacts between San Francisco and San Jose and at other locations; however, they would also have a beneficial effect on community cohesion by improving circulation between neighborhood areas. In addition, short term impacts of the HST system during construction include potential neighborhood disruption and division. This impact would be reduced by phasing the construction of segments of the system and by the use of in-line construction techniques where appropriate.

Using a study area of 0.25 mile (about 1200 feet) and information from the U.S. Census for the year 2000, the Final Program EIR/EIS identified areas along the Preferred Pacheco Pass Network Alternative likely to be adjacent to some low-income or minority populations that may be considered environmental justice communities. These will be areas for further study during project-level environmental analyses when more detailed and specific information will be developed for the HST alignments and designs (e.g., whether aerial, at-grade, or below grade). The number and location of people affected and the extent of impacts cannot be determined without the additional information to be provided in project-level studies. The statewide program EIR/EIS concluded that the overall system would not result in a disproportionate impact on minority or low-income populations. The Preferred Pacheco Pass Network Alternative would cross a wide variety of community types in the Bay Area to Central Valley, including rural, urban, and suburban, with various levels and mixes of development. The design practices and engineering criteria used in developing the HST system also serve to reduce impacts to people, including low-income and minority populations near HST facilities, by, among other things, placing the HST system in or along existing transportation corridors. Also,

the installation of grade separations will reduce existing horn noise and help maintain local access and community connections.

The identified mitigation strategies (see pages 5 and 6 of the MMRP - Appendix A) will substantially lessen or avoid land use impacts; however, sufficient information is not available at the program-level to conclude with certainty that mitigation will reduce this impact to a less-than-significant impact in all circumstances. This determination will be made during the project-level environmental review.

8.7 Agricultural Lands

The Preferred Pacheco Pass Network Alternative could convert approximately 1,128 acres of important farmland along the proposed alignments to non-agricultural uses (i.e., farmland listed as prime, statewide important, unique, and farmland of local importance on the Department of Conservation's Farmland Mapping and Monitoring Program [FMMP]). Mitigation strategies have been identified (see page 6 of the MMRP - Appendix A) that will substantially lessen this impact. For instance, the potential for being within existing transportation corridors can reduce the direct conversion of agricultural land to HST system uses to a negligible amount in some areas, such as along Henry Miller Road and along the UPRR alignment. In addition, mitigation in the form of conservation easements can provide permanent protection for agricultural and open space uses that will protect and promote the agricultural nature of selected easement lands in a manner not otherwise available. While some conversion of agricultural land will be necessary to implement the Preferred Pacheco Pass Network Alternative, mitigation strategies have been identified (see page 6 of the MMRP - Appendix A) that can reduce this impact to a less-than-significant level.

Implementation of the HST system along the Preferred Pacheco Pass Network Alternative could potentially cause farmland severance (division of one farmland parcel into two or more areas of operation by the placement of a barrier through the parcel) in some locations. Specifically, farmland severance could occur along the Pacheco alignment and on the western and eastern ends of the Henry Miller UPRR Connection alignment, where the alignment would not be within or adjacent to an existing transportation corridor. Due to the programmatic nature of this analysis, it is not possible to estimate the number of parcels or acres that could be affected by severance in the Program EIR/EIS. While mitigation strategies have been identified (see page 6 of the MMRP - Appendix A) that will substantially lessen this impact, it is unclear absent site-specific information that this impact can be mitigated to a less-than-significant level. This determination will be made during the project-level environmental review.

8.8 Aesthetics and Visual Resources

The construction and operation of the Preferred Pacheco Pass Network Alternative would alter existing scenic landscapes and cause impacts on visual resources related to the addition of infrastructure in, or removal of infrastructure from, the existing landscape. The infrastructure may include construction and improvements of the HST system, tunnels, fences, noise walls, elevated guideways, catenaries (support-pole systems for

power supply for trains), and stations. Visual impacts will have a higher sensitivity in areas of scenic open space and mountain crossings. The programmatic analysis of the visual impacts (see Section 3.9 of the Program EIR/EIS) included photo simulations of conceptual design of the facilities associated with the HST system for a set of types of representative landscapes for each segment of the proposed corridors, and concentrated on the locations where the plans show elevated structures, tunnel portals, or areas with extensive cut or fill.

Because the HST alignments would primarily be placed within or adjacent to existing transportation corridors and many of the stations would be co-located with existing facilities and in urban areas, the overall long-term visual impacts ranged from low to high, depending on site location. The alignment between San Francisco and San Jose would have an overall low visual impact as much of this alignment would be adjacent to the existing Caltrain tracks. There are locations where visual impacts could occur including where mature landscaping would be removed and where grade-separated overcrossings are proposed. Between San Jose and the Central Valley, the HST alignment would result in a low to medium visual impact primarily related to the crossing over SR-152, an eligible scenic highway, and I-5, a designated scenic highway, as well as being adjacent to the Los Banos Wildlife Area. Within the Central Valley, the Preferred Pacheco Pass Network Alternative would have a low visual impact.

Construction of the HST system would have short-term impacts on visual resources that vary with the type of alignment (at-grade, elevated, tunnel, etc.) selected.

While mitigation strategies have been identified (see pages 6 and 7 of the MMRP - Appendix A) to substantially avoid and lessen construction and operation impacts to aesthetics and visual resources, it is uncertain absent site-specific information that this impact can be mitigated to a less-than-significant level. This is of greatest concern in areas where changes in scenic open space and mountain crossing areas are anticipated. As part of the preliminary engineering and project-level environmental review, many of the impacts on aesthetics and visual resources can be avoided or substantially mitigated.

8.9 Public Utilities

Improvements associated with the proposed Preferred Pacheco Pass Network Alternative could cause conflicts with a pipeline or facility associated with a utility. This programmatic evaluation considered three of the most common major fixed facilities that may pose construction challenges as representative utility conflicts: electrical transmission lines, natural gas facilities, and wastewater treatment facilities. The Program EIR/EIS considered potential conflict incidents with natural gas pipelines and electrical transmission lines to be low or medium impact conflicts and less-than-significant because these utilities are generally relatively easy to avoid or relocate. Conflicts with fixed facilities such as electrical substations were considered high conflicts and significant.

The Preferred Pacheco Pass Network Alternative could result in approximately 75 conflicts with natural gas pipelines, 3 conflicts with electrical transmission lines, and 1

conflict with an electrical substation or power station. These conflicts include 30 natural gas pipelines (medium conflict) between San Francisco and San Jose; 3 electrical transmission lines (low conflict) and 22 natural gas pipelines (high conflict) between San Jose and the Central Valley; and 1 electrical substation or power station (high conflict) and 23 natural gas pipelines (medium conflict) in the Central Valley. The potential for conflicts with utilities along the Preferred Pacheco Pass Network Alternative, as a whole, are considered significant. At the program level, mitigation strategies have been identified (see page 7 of the MMRP - Appendix A) that can reduce this impact to a less-than-significant level.

8.10 Hazardous Materials and Wastes

Construction, operation, and maintenance of the Preferred Pacheco Pass Network Alternative could cause disturbance of existing, known hazardous waste sites or hazardous materials, in turn exposing workers and the general public to hazardous materials. Operation of the HST is not expected to generate hazardous waste. A potential hazardous waste impact is considered wherever the route of the HST alignment, station, or maintenance facility conflicts with a known contaminated site. These include those listed on the federal National Priorities List (NPL) (Superfund list), the State Priority List (SPL), and the California Integrated Waste Management Board's list of solid waste landfills (SWFL) in the State of California. The sites that pose the greatest concern are those with soil or groundwater contamination within or adjacent to the right-of-way for a proposed alignment or a station facility, and those with groundwater contamination near areas where excavation down to groundwater would be necessary.

The Preferred Pacheco Pass Network Alternative could result in approximately 79 conflicts with contaminated sites. These conflicts include 3 NPL sites and 30 SWLF sites between San Francisco and San Jose; 3 NPL sites and 22 SWLF sites between San Jose and the Central Valley; and 1 SPL site and 23 SWLF sites in the Central Valley. While these impacts are considered significant at the program level, mitigation strategies have been identified (see pages 7 and 8 of the MMRP - Appendix A) that can reduce the impacts to less-than-significant.

8.11 Cultural and Paleontological Resources

The Preferred Pacheco Pass Network Alternative could impact archaeological resources and traditional cultural properties and historic properties and resources by causing physical destruction or damage during construction or operation. Overall, the HST system has a low to high sensitivity for archaeological sites and historic properties that have the potential to be affected, depending upon site location. Construction of the HST alignment and stations has the potential to impact approximately 38 recorded archaeological resources that are located within the Area of Potential Effects (APE) including prehistoric and historic sites and burials. The HST also has the potential to impact approximately 134 previously recorded historic properties and resources including historic districts, structures, canals, bridges, and railroads.

The Preferred Pacheco Pass Network Alternative could also impact paleontological resources as a result of construction, including grading, cutting, tunneling, erecting pylons for elevated track, and due to station construction. While the majority of the HST alignment and stations would have low paleontological sensitivity, there are areas where there is the potential for high or undetermined sensitivity.

Mitigation strategies have been identified (see pages 8 and 9 of the MMRP - Appendix A) that will substantially lessen or avoid these impacts; however, sufficient information is not available at the program level to conclude with certainty that mitigation will reduce this impact to a less-than-significant level in all circumstances. This determination will be made during the project-level environmental review.

8.12 Geology and Soils

Seismic hazards evaluated within the Bay Area to Central Valley study region include ground shaking and ground failure. The Preferred Pacheco Pass Network Alternative could present risks to workers and public safety from the collapse or toppling of facilities, either during construction or after completion, caused by strong earthquakes. HST facilities could sustain damage due to secondary hazards (settlement) over soft or filled ground in the event of strong seismic activity.

The HST could present risks to workers and public safety due to ground rupture along active faults, either during construction or after completion. The HST could also present risks to workers and public safety due to the failure of natural or construction cut slopes or retention structures. The HST alignment could cross areas with hard, unfractured bedrock that will be difficult to excavate using methods other than blasting, which may pose a safety risk. Faulted materials that may be present can result in instability in the face of a tunnel area, another hazard. The HST could create the potential for migration of potentially explosive and/or toxic gases into subsurface facilities, such as tunnels or underground stations.

Seismic activity and preventative safety were paramount concerns in choosing the Preferred Pacheco Pass Alignment Network Alternative. The Preferred Pacheco Pass Network Alternative was chosen in part because it achieves the project purpose and objectives while minimizing the public safety concerns and technological challenges associated with known faults and other seismic hazards. While the above impacts associated with the Preferred Pacheco Pass Network Alternative are considered significant at the program level, mitigation strategies have been identified (see pages 9 and 10 of the MMRP - Appendix A) that can reduce these impacts to a less-than-significant level.

8.13 Hydrology and Water Quality Impacts

The Preferred Pacheco Pass Network Alternative best achieves the project purpose and objectives while minimizing environmental impacts, including those to water resources, while avoiding direct impacts on the San Francisco Bay.

However, given the scope of the project, the Preferred Pacheco Pass Network Alternative would encroach on 100-year floodplains within the San Jose to Central Valley study area. Direct encroachment into the floodplain by the HST system is anticipated to be approximately 449 acres and indirectly affect 1,372 acres. Floodplain encroachment may result in increased flood height from earthen berms or linear barriers to surface water flow.

The Preferred Pacheco Pass Network Alternative also could encroach on surface water resources. The direct encroachment onto streams would be approximately 19,531 linear feet, while encroachment onto lakes and waterbodies would be approximately 2.3 acres. Indirectly, the HST could affect over 100,000 linear feet of streams and 13.4 acres of waterbodies. The HST would be on structures over watercourses and waterbodies and impacts from aerial structures would be limited to column footings. The HST would also add impervious surface area, which can reduce water infiltration, contribute to runoff, and negatively affect surface water quality. The Preferred Pacheco Pass Network Alternative could cause erosion or be affected by erosive soils, which can negatively affect water quality, where the alignment options would extend to or along highly erodible slopes. Within the direct footprint of the Preferred Pacheco Pass Network Alternative there are approximately 72.5 acres of erodible soils, and 253 acres in the indirect study area.

The Preferred Pacheco Pass Network Alternative traverses at least 18 total maximum daily loads (TMDLs) impaired segments of water resources. The construction and operation of the HST is an unlikely source of most of the contaminants that impair the water resources, but some of the water resources are impaired for sediment and siltation, and construction may affect the sediment/silt loads. In addition, the sediment runoff from construction could potentially mobilize and release additional pesticides into some impaired waters.

Construction activities involving soil disturbance, excavation, cutting/filling, stockpiling, and grading activities could result in increased erosion and sedimentation to surface waters. Hazardous materials associated with construction equipment could also adversely affect water quality if spilled or stored improperly. In addition, construction in areas of high groundwater could require dewatering, with subsequent discharge to surface waters. This process could result in the release of sediment or other contaminants to surface waters. Water quality impacts from construction activities could violate water quality standards, exceed contaminant loadings in impaired waters, provide additional sources of polluted runoff, or otherwise degrade water quality.

During construction of at- and above-grade structures, tunnels and tunnel portals groundwater may be encountered, and dewatering may be necessary. In addition, construction and operation of the HST system components may affect groundwater recharge. Similar to surface waters, groundwater could be affected by construction activities. Construction in areas of high groundwater could require dewatering, with subsequent discharge to surface waters. This process could result in the release of sediment or other contaminants to surface waters. Construction activities such as excavation, trenching, or tunneling that occur in areas of high groundwater could affect groundwater supplies. The Preferred Pacheco Pass Network Alternative has the

potential to directly impact approximately 1,920 acres of groundwater and indirectly affect 5,664 acres.

While the above impacts are considered significant at the program level, mitigation strategies (see pages 10 and 11 in the MMRP - Appendix A) have been identified that can reduce these impacts to a less-than-significant level. Site specific information and mitigation efforts will be developed and analyzed during the Preliminary Engineering and project-level environmental review.

8.14 Biological Resources and Wetlands

For purposes of assessing the direct impacts to biological resources, an analysis was completed for the approximate footprint of the HST facilities (tracks, earthworks, structures, etc.), called the representative facility footprint, for all HST alternatives. This was defined to be 100 feet total width along the alignment both at-grade and on aerial structures. To capture the HST system's potential for indirect effects on species and habitats due to noise, light, or shadows, a larger area was evaluated. This larger area varied depending on the nature of the location. Sensitive habitat areas included a study envelope that was 2,000 feet in urban areas and 0.50 mile in rural areas and around station and facility areas in undeveloped areas, including biologically sensitive locations.

Sensitive vegetation communities are natural communities and wildlife habitat that are unique, of relatively limited distribution in a region, or of particularly high wildlife value. The Preferred Pacheco Pass Network Alternative could directly impact approximately 254 acres of sensitive vegetation out of the approximately 1,450 acres of land affected. The Preferred Pacheco Pass Network Alternative could also fragment existing habitats. Additionally, the Preferred Pacheco Pass Network Alternative could indirectly impact approximately 15,755 acres of sensitive vegetation out of the approximately 72,900 acres of land affected. The sensitive vegetation acreage is based on the buffer areas that are expected to exceed likely effects, which were designed to provide context to the impacts analysis.

Wildlife movement/migration corridors link together areas of suitable wildlife habitat that are otherwise separated by rugged terrain, changes in vegetation, or human disturbance. These corridors are important for species survival. The Preferred Pacheco Pass Network Alternative has the potential to affect wildlife movement/migration corridors where the alignment crosses wildlife movement corridors. In addition, fences that will be required for at-grade tracks will introduce a new barrier to animal movement. The actual impact will depend on the selection of final alignment and the final design of structures for the HST system. Specific impacts and mitigation measures will be evaluated and defined during the project level environmental review.

The Preferred Pacheco Pass Network Alternative has the potential to directly affect approximately 20,300 linear feet of non-wetland waters (lakes, rivers, streams, and other water bodies) and indirectly affect up to 100,000 linear feet of non-wetland waters.

The Preferred Pacheco Pass Network Alternative could directly impact 14.8 acres of wetlands. The study area for the HST system indicates there are 1,518 acres of wetlands in the study area that may be indirectly affected by the HST system.

The Preferred Pacheco Pass Network Alternative has the potential to affect fishery resources during construction due to the need to cross streams and rivers. Construction activities could increase sediment loads in stormwater during rain, or be a source of chemicals, both of which could be released into creeks and harm aquatic resources.

The Preferred Pacheco Pass Network Alternative could directly impact approximately 59 special-status plant species and 54 special-status wildlife species based on the representative facility footprint. Those species that are federally or state listed as threatened or endangered would be of special concern because of the protection afforded them under the federal Endangered Species Act and the California Endangered Species Act. Information for the study area indicates the possible presence of more than 130 special-status species that could be indirectly affected by the Preferred Pacheco Pass Network Alternative. Some of these species could be affected by the construction and the operation of the HST system.

The Preferred Pacheco Pass Network Alternative could directly impact protected habitat areas and areas identified for conservation including the California Department of Fish and Game (CDFG) Upper Cottonwood Creek Wildlife Area resulting in adverse impacts where the alignment is not in tunnel. The Henry Miller portion of the alignment would adversely impact a portion of the 240,000 acre GEA which contains a unique assemblage of migratory birds, sensitive species, wetlands, and habitat values.

While the mitigation strategies identified for each of these concerns (see pages 12 through 14 of the MMRP - Appendix A) will substantially lessen or avoid these impacts, sufficient information is not available at the program level to conclude with certainty that mitigation will reduce the impacts to a less-than-significant level in all circumstances. Each of the network alternatives analyzed in the Program EIR/EIS would have varying degrees of adverse impact on biological resources and wetland habitats. It should be noted that the mitigation strategies for impacts to protected habitats and conservation lands offer the added benefit of supporting conservation of wetlands and sensitive ecological areas and limiting urban encroachment in the vicinity of the HST through the GEA in a manner that would not be available through other foreseeable means. Both the USACE and the USEPA have concurred that the Preferred Pacheco Pass Network Alternative would most likely contain the LEDPA.

8.15 Public Parks, Recreation, and 4(f) Resources

The Preferred Pacheco Pass Network Alternative could result in impacts to parks and recreation resources, including publicly owned parks, wildlife and waterfowl refuges, historic sites of national, state or local significance, and other recreational resources covered by either section 4(f) of the Department of Transportation Act (49 U.S.C. § 303(c) or section 6(f) of the Land and Water Conservation Fund Act of 1965 (16 U.S.C. § 460l-8).

The Preferred Pacheco Pass Network Alternative could result in direct impacts to lands containing publicly owned parks and recreational resources by causing use of such lands for the placement of HST facilities, and could result in indirect impacts to these resources due to construction activities or HST system operations which adversely affect the use of publicly owned parks and recreational resources. In addition to addressing noise, biology, and air quality impacts in other sections of this ROD, the Program EIR/EIS identifies the park and recreational resources located within 900 feet of the centerline of HST alignments or facilities (see Section 3.16 of the Program EIR/EIS). Whether or not these identified properties would be impacted will be determined during project-level environmental review when site-specific design information is available.

The strategies of placing the proposed HST system in or along existing transportation corridors (existing railroad or highway rights of way) or in a tunnel and of requiring stations to be multi-modal transit hubs is deliberate, and serves to reduce the extent of land acquisition needed for the proposed HST system, minimizing the potential for the HST system impacts to parks and recreational resources. Nearly two thirds of the Preferred Pacheco Pass Network Alternative alignment is either within or adjacent to existing transportation corridors or in tunnel.

There are 51 Section 4(f) and 6(f) resources within 900 feet of the Preferred Pacheco Pass Network Alternative alignment, and 19 are within 150 feet of the HST system. At this program level it is not possible to know precisely the location, extent and particular characteristics of impacts to park resources. Due to this uncertainty, for the purposes of region-wide review at the programmatic level, this impact is considered significant, particularly for those resources within 150 feet. Site-specific plans and relevant mitigation measures will be developed and analyzed during project-level environmental review.

While mitigation strategies have been identified (see pages 14 and 15 of the MMRP - Appendix A) that would substantially lessen or avoid this impact, sufficient information is not available at this program level to conclude with certainty that mitigation will reduce this impact to a less-than-significant level in all circumstances.

Planning efforts would be undertaken as a part of the project-level documentation phase to further avoid and minimize harm to Section 4(f) and 6(f) resources impacted during implementation of the Preferred Pacheco Pass Network Alternative. Mitigation is anticipated to include measures that may be taken to reduce or eliminate potential adverse environmental impacts, such as beautification measures, replacement of land or structures or their equivalents on or near their existing site(s), tunneling, cut and cover, cut and fill, treatment of embankments, planting, screening, creating wildlife corridors, acquisition of land for preservation, installation of noise barriers, and establishment of pedestrian or bicycle paths. Other potential mitigation strategies could be identified during the project-level public review process. Project-level environmental documents will include Section 4(f) and 6(f) evaluations that will assess impacts and potential uses of protected properties and will support Section 4(f) and 6(f) determinations.

8.16 Cumulative Impacts

Implementation of the Preferred Pacheco Pass Network Alternative in consideration with closely related past, present, and reasonably foreseeable probable future projects could lead to a considerable contribution to the cumulative impacts related to:

- surface streets leading to and from proposed HST stations.
- air quality within the two air basins in the study area (in combination with the air quality impacts of other projects or improvements identified for the cumulative impact analysis and those projects considered in the state implementation plan for air quality);
- local adverse air quality impacts related to traffic near HST stations;
- noise and vibration;
- use of nonrenewable resources;
- land use compatibility;
- community and neighborhood cohesion and property loss;
- community/neighborhood impacts;
- conversion of agricultural land to non-agricultural use;
- severance of agricultural land;
- visual resources (particularly scenic resources, areas of historical interest, natural open space areas, and significant ecological areas);
- public utilities and future land use opportunities (because of right-of-way needs, extensive utility relocation, and property restrictions associated with construction of multiple linear facilities and other reasonably foreseeable future projects in the study area);
- cultural and paleontological resources;
- geology and soils related to slope stability in various proposed locations of cut-and-fill and areas susceptible to slope failure; and subsidence if other projects under construction in the area also needed to dewater from the same drainage basin;
- hydrology and water resources;
- sensitive biological resources and wetlands; and
- parklands and recreational resources.

While identified mitigation strategies will substantially lessen or avoid these effects, sufficient information is not available at the program-level to conclude with certainty that mitigation will reduce the HST system's contribution to cumulative effects in all circumstances. To assure that potential cumulative effects will be fully examined in the future, future project level studies will incorporate analyses of impacts on appropriate regional study areas beyond the area immediately affected by the Preferred Pacheco Pass Network Alternative. To assure that appropriate planning for HST station areas is

undertaken so as to avoid indirect effects associated with growth, station area development strategies are described in Chapter 6 of the Final Program EIR/EIS and are included in the MMRP.

8.17 Growth-Inducing Effects

Transportation investments can lead to reduced travel time or cost, improved accessibility to regions or parts of regions, and reduced accidents or air pollution. These effects contribute to economic growth by allowing time and money previously spent on travel to be used for other purposes, attracting businesses and residents to places with increased accessibility or improved quality of life, and reducing overall costs to society. The population and employment growth that result from economic growth comprise the growth-inducing effects of transportation investments such as the HST system. This growth can contribute additional effects on human and natural resources beyond those directly attributable to the changes in the transportation system, which the Program EIR/EIS refers to as growth-related indirect impacts. The Program EIR/EIS presented an analysis of growth effects in the Bay Area to Central Valley study region that may result from the implementation of the HST system.

- *Population Effects*. Statewide population is expected to grow by about 33% between 2005 and 2030 under the No Project Alternative. Compared to the No Project Alternative, population under the Preferred Pacheco Pass Network Alternative (statewide system) is projected grow by approximately an additional 1.4%. Within the 11 county core study area, population is expected to grow by 44% between 2005 and 2030 under the No Project Alternative and an additional 1.6% with the HST system. Compared to the No Project Alternative, the population growth rate equates to an additional 502,000 people with HST. The population growth with HST represents the increased accessibility provided by the transportation investment. An investment in HST is projected to lead to greater economic growth within the state and core study area than the No Project Alternative.
- *Employment Effects*. Statewide employment is expected to increase by about 37% between 2002 and 2030 under the No Project Alternative. Compared to the No Project Alternative, statewide employment growth is projected to be roughly 1.5% higher under the Preferred Pacheco Pass Network Alternative (statewide system). Within the 11 county core study area, employment is expected to grow by 37% between 2005 and 2030 under the No Project Alternative and an additional 2% with the HST system. Compared to the No Project Alternative, the employment growth rate equates to an additional 320,000 jobs with HST. Job growth with HST is expected in the FIRE (Finance, Insurance and Real Estate), services, TCU (transportation, communications, and utilities), wholesale trade, and retail trade categories. This is further broken out to job growth in the TCU and trade sectors in the Central Valley and in San Diego, and in the FIRE and services sectors in the “rest of California.” The FIRE and services sectors tend to be the most compatible for location in higher density settings, such as near potential HST sites where offices and retail development could be expected.

- *Urbanized and Non-urbanized Areas*. Urbanized areas in the core study area are expected to grow by about 40% between 2002 and 2030 under the No Project Alternative. This growth would represent an increase of about 400,000 acres over today's 1.0 million acres within the core analysis counties. Compared to urbanized area growth under the No Project Alternative, urbanized area growth is expected to be 0.9% (9,000 acres) higher under the Preferred Pacheco Pass Network Alternative. As with the population and employment growth, the level of difference for urbanized area size is small compared to the overall level of growth represented by the No Project Alternative relative to the 2002 existing conditions. Noticeable differences in these general patterns can be seen for Madera and Merced Counties, both of which are projected to have sizable urbanization increases with the HST system compared to the No Project Alternative.
- *Location of Growth*. The Program EIR/EIS provided county-level population growth rates for the No Project Alternative and the Preferred Pacheco Pass Network Alternative (statewide system). The results show that with the HST system, incremental population growth is highest in Madera County, followed by Merced County, San Diego County, and the Southern San Joaquin Valley; incremental growth rates are lowest in Southern California (except San Diego County) and areas from San Joaquin County northward. Incremental employment growth with HST is highest in Madera and Merced Counties, followed by Fresno and Stanislaus Counties and the Southern San Joaquin Valley. The incremental job growth in the Northern Central Valley region with the HST system is oriented much more heavily toward FIRE and services (about 62% of total), with trade, and TCU accounting for about 27% of incremental growth. This is the largest shift in the nature of employment for any region and suggests that the HST system could be a strong influence in attracting higher-wage jobs to the Central Valley. Taken together, these results suggest that additional population growth under the HST system is driven by internal job growth due to the initiation of HST service, rather than due to long-term population shifts from the Bay Area and Southern California based on long-distance commuting.

In summary, the Preferred Pacheco Pass Network Alternative would stimulate additional growth relative to the No Project Alternative in many Central Valley counties between Sacramento and Fresno. The incremental employment effect is much larger than the incremental population effect in all Central Valley counties, suggesting that the HST system might be more effective at distributing employment throughout the state. Also, this result suggests that the Preferred Pacheco Pass Network Alternative would not stimulate large shifts in residential location from the Bay Area into the Central Valley.

- *Effect of Authority Station Area Development Policies*. When making decisions regarding both the final selection of station locations and the timing of station development, the Authority would consider the extent to which appropriate Station Area Plans and development principles have been adopted by local authorities. In addition to potential benefits from minimizing land consumption needs for new growth, dense development near HST stations will concentrate activity in areas conveniently located near stations. This would increase the

utilization of the HST system, generating additional HST ridership and revenue to benefit the entire state. Reducing the land needed for new growth should reduce pressure for new development on nearby habitat areas and agricultural lands.

Denser development allowances would also enhance joint development opportunities at and near the station, which in turn could increase the likelihood of private financial participation in construction related to the HST system. A dense development pattern can better support a comprehensive and extensive local transit and shuttle system, bike and pedestrian paths, and related amenities that can serve the local communities as well as provide access and egress to HST stations. The Authority's adopted policies would ensure that implementation of the HST in California would maximize station area development that serves the local community and economy while increasing HST ridership. HST station area development principles draw upon TOD strategies that have been successfully applied to focus compact growth within walking distance of rail stations and other transit facilities. Applying TOD measures around HST stations is a strategy that works for large, dense urban areas, as well as smaller central cities and suburban areas. TOD can produce a variety of other local and regional benefits by encouraging walkable, bikeable compact and infill development. Local governments would play a significant role in implementing station area development by adopting plans, policies, zoning provisions, and incentives for higher densities, and by approving a mix of urban land uses. Almost all TOD measures adopted by public agencies involve some form of overlay zoning that designates a station area for development intensification, mixed land uses, and improvements to the pedestrian/bicycle environment. TOD measures are generally applied to areas within one-half mile of transit stations, and this principal would be followed for HST stations.

The responsibility and powers needed to focus growth and station area development guidelines in the areas around high-speed stations are likely to reside primarily with local government. The primary ways in which the Authority can help ensure that the HST system becomes an instrument for encouraging maximizing implementation of station area development principles include:

- Select station locations that are multi-modal transportation hubs with a preference for traditional city centers.
- Adopt HST station area development policies and principles that require TOD, and promote value-capture at and around station areas as a condition for selecting a HST station site.
- Provide incentives for local governments where potential HST stations may be located to prepare and adopt Station Area Plans and to amend City and County General Plans that incorporate station area development principles in the vicinity of HST stations.

Using the mitigation strategies identified in the MMRP (Appendix A), the Authority will work with local governments and local planning processes on these issues.

Indirect Effects Related to Growth from the HST Alternative

The Preferred Pacheco Pass Network Alternative may have a positive (i.e., result in an increase), but small, statewide effect on population and employment growth compared to the No Project Alternative. At the sub-state level, San Joaquin Valley counties are projected to experience population and employment growth rates that are noticeably higher than the statewide average. Despite the relatively small magnitude of the expected statewide growth, the growth could contribute to indirect impacts on the human and natural environment. Many of these indirect, growth-related impacts derive from increased urbanization needed to accommodate the additional population and employment. In 2030, the total size of urbanized areas in the study area would be virtually the same under the proposed Preferred Pacheco Pass Network Alternative as under the No Project Alternative, although the HST system will lead to increased urbanization in Fresno, Madera, Merced, and Santa Clara Counties. Much of the potential incremental growth associated with the HST system is likely to be focused around HST stations because these locations would receive the highest accessibility benefit with HST service.

The following summarizes the analysis in the Final Program EIR/EIS:

- No indirect, growth-related impacts from implementing the HST system are expected to the following resource areas: noise and vibration; exposure to EMF or EMI; public utilities; exposure to hazardous materials or wastes; cultural resources; geology and soils; and public parks and recreation. Indirect aesthetic impacts from induced growth under the Preferred Pacheco Pass Network Alternative are considered speculative at the programmatic level.
- Overall traffic conditions are expected to improve with the HST system, despite the estimated 1.2% increase in study area population and employment under the Preferred Pacheco Pass Network Alternative. Some increase in local traffic around urban HST stations, consistent with this increased growth, is expected to be concentrated.
- Air quality is expected to improve with the HST system, however, the increased population and employment growth may contribute to increased mobile-source air pollutants due to increased traffic around stations.
- There are no significant differences in energy consumption expected statewide between the Preferred Pacheco Pass Network Alternative and the No Project Alternative when considering growth. However, the HST system could result in less overall demand for transportation energy, despite the expected small increase in growth with the HST system. The potential increased density in the vicinity of proposed HST station sites would limit the amount of energy required for construction of and access to future infrastructure projects, reduce demand for large-volume transportation-related infrastructure projects, and result in savings in building-related energy use. The projected population and employment distributive effect of the project could create the need for some change in the incremental development of overall energy and electricity generation and/or transmission capacity among regions and potentially require development of more incremental production and/or transmission capacity.

- Socioeconomic changes from growth under the Preferred Pacheco Pass Network Alternative are expected to be small, and therefore indirect land use compatibility impacts from induced growth are also expected to be small. Growth associated with the HST system would be distributed across various communities, would be reflected in infill development and increased development densities around stations, and is not expected to result in a significant increase in demand for municipal services. Planning for such services is within the purview of local and regional agencies and expected growth in the future would be within typical planning horizons for such services.
- Growth under the Preferred Pacheco Pass Network Alternative is expected to impact 6,000 acres, or about 3%, more of important farmland within the 11 county study area than the No Project Alternative due to urbanization. Within the study area, projected farmland losses beyond the No Project Alternative would include 3,500 acres of prime farmland, 800 acres of farmland of statewide importance, 1,300 acres of unique farmland, and 500 acres of farmland of local importance.
- Growth under the Preferred Pacheco Pass Network Alternative is expected to impact about 22 miles more of waterways within the 11 county study area than the No Project Alternative, or about 2% more. The largest percentage of this increase is expected to occur in Merced and Fresno counties.
- Growth under the Preferred Pacheco Pass Network Alternative has the potential to affect up to 2,600 acres more of land which may contain some threatened and endangered species habitat within the 11 county study area than the No Project Alternative. The largest percentage increase is expected to occur in the Bay Area, about 4% or 1,300 acres. Growth with the project has the potential to affect about 72 acres more of areas containing wetlands than the No Project Alternative, or less than 1% more. The largest acreage and percentage increase, 49 acres, is projected to occur in the Bay Area due to future urbanization.
- At the program level it is not possible to predict the specific location(s) where the increment of future growth related to the Preferred Pacheco Pass Network Alternative may occur or is likely to occur in order to recommend mitigation strategies to other agencies; nor is it within the purview of the Authority to adopt such strategies. Additionally, the size, scope and attributes of specific projects that may be proposed in the future cannot be predicted, nor can the outcome of public agency approval processes and the ultimate configuration of any approved projects be predicted. However, in addition to the general and specific plans adopted by local governments which address community and growth expectations, the general requirements of CEQA, the Endangered Species Act, other measures required by the Department of Fish and Game and the permit requirements of other regulatory agencies can be expected to apply to both public and private projects in the future and to require avoidance and minimization strategies to reduce potentially significant impacts to environmental resources. These strategies can be expected to substantially reduce and avoid adverse environmental impacts to these resources.

9. Measures to Minimize Harm

The Authority has committed to use all feasible and practicable means, including design practices and mitigation strategies, to avoid or minimize adverse effects on the environment that would result from the implementation of the Preferred Pacheco Pass Network Alternative. (California High Speed Rail Authority Resolution No. 08-01.) To minimize potential future harm from implementation of the proposed project, future project-level environmental analysis and documentation will review mitigation strategies described in the Authority's adopted MMRP and prescribe appropriate design practices and mitigation measures. FRA adopts the design practices and mitigation strategies in the MMRP included as Appendix A to minimize harm at the program level.

Chapter 3 of the Final Program EIR/EIS describes program-level mitigation strategies to minimize or mitigate adverse environmental impacts. The monitoring and enforcement program is to apply this plan during the project-level environmental compliance process. Some mitigation strategies may cause other adverse environmental impacts at the same time that they mitigate impacts addressed in this Program EIR/EIS. Future tiered project-level environmental reviews will determine appropriate site-specific mitigation measures.

9.1 Design Practices

The Authority would employ design practices identified in the Final Program EIR/EIS as the Preferred Pacheco Pass Network Alternative is developed further in the project-level environmental review, final design and construction stages. These practices will be applied to avoid and minimize potential adverse environmental impacts. Design practices are listed below.

- Existing transportation corridors would be used. Nearly 70% of the adopted preferred HST alignments are either within or adjacent to a major existing transportation corridor (existing railroad or highway right-of-way).
- Tracks that are fully grade separated from all roadways would be used.
- Multi-modal transportation hubs would be used.
- Some of the preferred alignments would be in a tunnel or trench section, which would reduce noise, community intrusion, biological and visual impacts.
- Electric power, high-quality track interface, and smaller, lighter and more aerodynamic trainsets would be used, which would result in less noise than existing commuter and freight trains because HST do not have the rumble associated with diesel engines and use a design that greatly minimizes track noise.
- TOD and smart growth land use policies would be used. Station area development principles that would be applied at the project-level for each HST station and the areas around the stations would include:
    - Higher density development.

  - A mix of land uses (retail, office, hotels, entertainment, residential, etc.) and housing types to meet the needs of the local community.
  - A grid street pattern and compact pedestrian-oriented design that promotes walking, bicycle and transit access.
  - Context-sensitive building design that considers the continuity of the building sizes and coordinates the street-level and upper-level architectural detailing, roof forms, and rhythm of windows and doors.
  - Limits on the amount and location of development-related parking, with a preference that parking be placed in structures.
- Portions of the system would be in tunnel or on aerial structure, which would avoid and/or minimize impacts to surface water resources.
- Measures to avoid water infiltration would be taken.
- Underpasses or overpasses or other appropriate passageways would be designed to avoid, minimize and/or mitigate any potential impacts to wildlife movement.
- In-line construction would be used for sensitive areas.

10. Relationship to Other Plans

The No Project Alternative included planned and programmed transportation improvements in fiscally constrained plans.

The purpose of the proposed HST system includes “interfaces between the HST system and major commercial airports, mass transit and the highway network”. Planned commuter rail improvements in the study region are related and would connect to the proposed HST system. These plans and projects were considered in the development of the HST alignment alternatives and station location options.

San Francisco Bay Area Regional Rail Plan. Approved by Bay Area voters in March 2004, the Regional Measure 2 (RM2) Traffic Relief Plan provides funding to various transit operating assistance and capital projects and programs that have been determined to facilitate travel in the toll bridge corridors. One provision of RM2 provided for the preparation of a Regional Rail Plan to guide near- and long-term planning for an integrated and expanded passenger rail system that would also accommodate freight needs (Streets and Highways Code Section 30914 [c] [33]). Additionally, RM2 calls for the analysis of alternative California HST alignments between the Central Valley and the Bay Area, which were used to inform the Program EIR/EIS. These two RM2 study elements were integrated to provide a fully comprehensive San Francisco Bay Area Regional Rail Plan. The MTC, BART, Caltrain, and the Authority, along with a coalition of rail passenger and freight operators, prepared the comprehensive Regional Rail Plan. As required by RM2, MTC adopted the Regional Rail Plan in September 2007.

The Regional Rail Plan examined ways to incorporate passenger trains into existing rail systems, improve connections to other trains and transit, expand the regional rapid

transit network, increase rail capacity, coordinate rail investment around transit-friendly communities and businesses, and identify functional and institutional consolidation opportunities. The plan also included a detailed analysis of potential HST routes between the Bay Area and the Central Valley consistent with the Authority's environmental review of the proposed rail lines. Overall, the plan looked at improvements and extensions of railroad, rapid transit, and high-speed rail services for the near term (5–10 years), intermediate term (10–25 years), and long term (beyond 25 years).

Capitol Corridor Rail Service. The Capitol Corridor is planning to implement a next phase of capacity increasing projects in the Oakland to San Jose corridor and a series of track improvements aimed at reliability in the Oakland to Sacramento corridor. A track capacity enhancement project is also planned for the Auburn to Sacramento corridor which will allow, in a phased project implementation approach, service frequency increases in this portion of the corridor. Projects previously programmed by the State include the Capitol Corridor Joint Powers Authority's (CCJPA's) contribution to the San Jose 4th Main Track project and the Bahia Track Improvement project.

With the recent passage of Proposition 1B, a series of projects that jointly benefit both freight and passenger rail are identified. The projects may include a revised Alameda Creek crossing in the Niles Junction area which will allow transfer of freight rail traffic to and from the Altamont Pass from the Oakland Port in a more expeditious route than is done currently running freight through Fremont. This improvement coupled with improvements at a junction point in South Hayward will allow passenger trains (Capitol Corridor and the planned Dumbarton Rail service) to avoid freight conflicts for a portion of the route between Oakland and San Jose. Double tracking is also planned north of the South Hayward point which will provide for additional track capacity for freight and passenger trains. A project planned for the route is to upgrade or replace the bridge crossing between Martinez and Benicia to avoid the conflicts created when waterborne vessels require the current bridge to be lifted.

Caltrain Corridor Commuter Rail Service. The Caltrain Joint Powers Board (JPB) forecasts a robust increase in Caltrain ridership driven by population increase, work force increase, and convenience and economic influences. The first 5 years of the Caltrain capital program focuses on a program called the State of Good Repair. This program concentrates on optimizing the current system's performance, including improvements to the signaling and communications systems, replacing old bridges, improving the approach speeds and flexibility at the San Francisco terminus, and eliminating the last of the hold-out stations. The product of this portion of the program is an optimal condition of the current system which will enable larger programs with minimal impact to performance.

Altamont Commuter Express Service. The San Joaquin Regional Rail Commission, which owns and operates the Altamont Commuter Express (ACE), operates four daily roundtrips, Monday–Friday between Stockton and San Jose through the Altamont Pass. The 86-mile ACE corridor directly serves three counties and eight cities between the Central Valley and the Silicon Valley. The trains stop at three San Joaquin stations (Stockton, Lathrop/Manteca, and Tracy), four Alameda County Stations (Livermore [2], Pleasanton, and Fremont), and in Santa Clara County (Santa Clara [2] and San Jose).

ACE is working with the UPRR to complete a major signal upgrade project between Fremont and Stockton to improve reliability and speed on the route. Over the next 5-year period, ACE will be implementing capital projects that improve reliability and increase speeds in the Stockton to Fremont section of the corridor.

ACE is completing two planning/implementation studies. The ACE Corridor Analysis Study, focused on identifying improvements to ACE Service, which includes the potential purchase of a separate agency-owned corridor for the ACE service and short haul freight between the Port of Oakland and the Central Valley, and providing a better connection to BART. The Expansion Opportunities Analysis is looking at the expansion opportunities for commuter rail service for Merced to Sacramento, Stockton to Oakland (Delta Route), and Los Banos to Tracy.

Dumbarton Rail Project. The March 2004 voter approval of RM2 included funding to reconstruct the out-of-service Dumbarton rail line between Southern Alameda County and the San Francisco Peninsula. The reconstructed rail bridge across the San Francisco Bay would be the key component in the establishment of the commuter rail service between the Union City BART station and the Caltrain line on the peninsula.

New trackway connections would also need to be constructed in the vicinity of the Union City BART station to provide the transfer connection. Service would begin at Union City in the morning and would carry commuters to the west bay via Union Pacific tracks in Fremont and Newark, continuing on the publicly owned and reconstructed Dumbarton segment. Rail equipment comparable to current Caltrain rolling stock is expected to be employed.

The reconstructed Dumbarton segment includes embankment, trestle structure, and two swing bridges; most of the segment is single track with limited passing sidings. New stations would be built in Menlo Park and Newark as well as at the Intermodal Station at Union City. The connections of the Dumbarton Line to Caltrain in Redwood City would also be improved as part of the project. The project is currently being considered for phased implementation due to funding constraints and the inability to reach a track sharing agreement with the Union Pacific Railroad. The initial phase would include the reconstruction of the publicly owned right of way between Newark and Redwood City. Rail service would operate from a Newark station across the reconstructed bridge to Redwood City and Caltrain. A second component of the project, the Union City Intermodal Station, would also be constructed and utilized by the Capital Corridor service.

Environmental studies are now under preparation; preliminary engineering is also underway to refine the estimated cost for rehabilitating the bay-crossing structures. Local land use plans, both adopted or under preparation, support TOD at the project station locations.

11. Compliance with Other Federal Regulations

11.1 Section 4(f) and 6(f) Approvals

Section 3.16 of the final Program EIR/EIS contains an analysis of Section 4(f) and 6(f) resources, including publicly owned parklands, recreation lands, wildlife and waterfowl refuges, and historic sites. At the program level of analysis, the Authority and FRA have described the existing Section 4(f) and 6(f) resources within the Bay Area to Central Valley region and identified the potential uses of and potential impacts on Section 4(f) and 6(f) resources for each alignment alternative. Findings under sections 4(f) [49 U.S.C. § 303(c)] and 6(f) [16 U.S.C. § 460l-8] will be prepared as part of future project level environmental review when site-specific information about the HST system and location alternatives are known.

11.2 Section 106 of the National Historic Preservation Act

The National Historic Preservation Act (NHPA) [16 USC § 470 et seq.] established a national program to preserve the country's historical and cultural resources. Section 106 of the NHPA requires federal agencies to consider the effects of their actions on historic properties and provide the President's Advisory Council on Historic Preservation an opportunity to comment on a proposed action before it is implemented. Regulations for implementing the Section 106 process are provided in 36 CFR § 800. As allowed under 36 CFR § 800.4(b)(2), a phased approach to identification of historic properties can be used when the proposed undertaking involves corridors. As part of the statewide program EIR/EIS document (November 2005), the FRA initiated consultation with the State Historic Preservation Office (SHPO) under Section 106 in November 2002. SHPO concurred with a phased identification effort for historic properties as provided for in 36 CFR § 800.4 (b)(2). This phased identification effort continued into Bay Area to Central Valley HST Program EIR/EIS.

As indicated by the results of the Program EIR/EIS, the FRA and the Authority have determined that historic properties likely exist along the Preferred Pacheco Pass Network Alternative through background research, consultation, and abbreviated field reconnaissance. Once alignment alternatives have been refined at the project level, full identification efforts may proceed. Under Section 106, the procedures would include identifying resources with the potential to be affected, evaluating their significance under NRHP, identifying any substantial adverse effects, and then evaluating potential mitigation.

11.3 Section 404 of the Clean Water Act

As noted above, the USEPA and USACE have participated in the tiered environmental process, including the development of both the Draft and Final Program EIR/EIS. In accordance with the MOU between FRA and USEPA for this environmental review, USEPA and USACE were consulted concerning the selection of the preferred corridor and route most likely to yield the LEDPA. The USEPA and USACE have concurred that

the Preferred Pacheco Pass Network Alternative is most likely to contain the LEDPA. Future project-level environmental review will include further consultation with USEPA and USACE regarding the Clean Water Act leading to USACE permit applications.

11.4 Endangered Species Act

Preparation of the Program EIR/EIS involved informal consultation and information sharing with the U.S. Fish and Wildlife Service (USFWS) of the U.S. Department of Interior (DOI). Project-level environmental review would involve consultation with USFWS, as needed, for potential impacts on federally listed plant and wildlife species, including the preparation of a biological assessment or assessments, and biological opinions for each phase of project implementation. Formal consultation under Section 7 of the Endangered Species Act for project study areas of concern would accomplish the following steps identified by DOI: 1) identifying the conservation needs of each listed species with the potential to be impacted by the proposal; 2) identifying the threats to each listed species' conservation related to the proposed action; 3) identifying species conservation or management units and the threats affecting those units; 4) identifying species' conservation goals framed within the context of the HST program; and 5) developing conservation/management unit strategies. The FRA and the Authority would prepare Biological Assessments to address the affected conservation/management units identified.

12. Comments Received on the Final Program EIR/EIS

Written and oral comments on the Final Program EIR/EIS were received and addressed by the Authority as part of their decisions on the Preferred Pacheco Pass Network Alternative, and are included in Appendix B. Substantive comments made in letters written to the FRA are addressed below.

12.1 U.S. Environmental Protection Agency

The USEPA submitted comments on the Final Program EIR/EIS. The USEPA encourages continued regulatory and resource agency coordination during the Tier-2 project-level analysis of the Preferred Pacheco Pass Network Alternative to inform design choices that are most protective of the natural environment.

<u>Integration of Clean Water Act and NEPA Requirements</u>
The USEPA submitted recommendations for future Preferred Pacheco Pass Network Alternative project-level Tier 2 analysis related to wetlands and other waters and requested that this future analysis be focused on a more accurate estimate of potential impacts and opportunities for reducing impacts to waters from the project. It was also recommended that interagency coordination among resource and regulatory agencies occur as part of this future analysis. The USEPA has stated that they are available to discuss the mitigation framework for the project.

Direct and indirect impacts identified in the Final Program EIR/EIS will be further minimized through project design features. The Pacheco Pass Network Alternative would include tunnels and elevated structures to minimize impacts on streams, water bodies, wetlands, wildlife movement corridors, and sensitive species and habitat. The alignment along Henry Miller Road, for example, would extend approximately 3 miles on elevated structure, which could potentially reduce total direct and indirect impacts on wetlands. More detail both in project refinement and specific on-the-ground information would be developed in the Tier 2 process that would allow for greater estimate of impacts and avoidance. The FRA and Authority will continue coordination with all agencies and organizations involved to identify specific issues and develop solutions that avoid, minimize, and mitigate potential impacts. The FRA and Authority also have committed to investigating site-specific location and design alternatives, including avoidance and minimization alternatives, during the Tier 2, project-level environmental review. This includes evaluating design alternatives to the north and south of the current proposed Henry Miller alignment alternative.

The Authority also made a commitment to acquire agricultural, conservation and/or open space easements encompassing at least 10,000 acres and generally located along or in the vicinity of the GEA to mitigate for impacts. This measure would reduce impacts to and support conservation of wetlands and sensitive ecological areas, as well as limit urban encroachment in the vicinity of the HST through the GEA and other areas. The focus for these easements would be in areas undergoing development pressures, such as the areas around Los Banos and Volta, and/or areas that would be most appropriate for ecological conservation or restoration. The eventual locations and total acreage for these easements would be determined in conjunction with the Tier 2 project-level environmental analysis and decisions addressing the Gilroy to Merced portion of the HST system and in consultation with the CDFG, the USFWS, and the Grassland Water District.

Growth-related Impact Analysis

The USEPA reiterated comments it made on the Draft Program EIR/EIS regarding potential growth-related impacts associated with station locations. The USEPA recommended that the FRA's ROD include additional information about growth inducing impacts by county with upper and lower potential ranges of impacts illustrating the role of station selection in the amount of growth that may be induced. The USEPA further recommended that mitigation measures be adopted to address an offset growth inducement of the high speed train, including a growth mitigation plan.

Chapter 5 of the Final Program EIR/EIS and Standard Response 4 describe the potential for the HST system to induce growth and to create secondary impacts to the environment associated with urbanization. Section 5.5 discusses relative differences in impacts depending on the alignment alternatives and station locations, and uses Stanislaus County to illustrate the urbanization differences between a downtown station (Modesto) and a suburban station (Amtrak Briggsmore). The illustration, which is based on analysis in the Statewide HST Program EIR/EIS, is intended to underscore the fact that locating stations in downtown core areas will lead to fewer urbanization effects than locating stations in suburban areas.

This *relative* difference in growth-inducing effects between a downtown and a suburban station location should not be construed as a description of the absolute impacts of either station location. As explained in the responses to comments in the Final Program EIR/EIS, it is not possible to associate specific levels of population/employment growth, urbanization, and indirect impacts with individual stations. Individual stations draw ridership from a broad catchment area that does not necessarily follow county boundaries, which form the basis for the growth inducement and secondary impact analysis. The relationships considered in the growth inducing impacts analysis are simply too numerous and complex to state that a particular station will lead to a particular amount of growth. The EIR/EIS therefore offered a qualitative assessment of potential differences between the alignment alternatives and noted those counties expected to experience the highest level of growth with the HST.

Both NEPA and CEQA require that an EIS or EIR discuss a project's impacts, including the potential for a project to induce urban growth. The Final Program EIR/EIS offers the public and decision makers information about the potential for the HST to fuel population and economic growth in the Bay Area to Central Valley study region, including the potential magnitude, location, and nature of that growth. The EIR/EIS also characterizes the potential indirect effects of HST-induced growth by resource area and discusses how these effects will be evaluated more specifically with project-level studies.

The analysis concludes that growth will be higher with the representative Altamont Network Alternative than with the representative Pacheco Network Alternative,,as would community impacts and wetlands impacts. For both networks, the greatest magnitude of secondary impacts will occur in Madera and Merced counties. Alignment and station locations that serve existing urban and community centers, rather than less-developed outlying areas, would be expected to result in lower ecological and natural resources impacts, but higher community and social impacts, both positive and negative. And the extent of secondary impacts will be highly dependent on local land use plans and policies.

The Final Program EIR/EIS includes numerous mitigation strategies designed to avoid and minimize the physical environmental impacts of the HST system. These mitigation strategies include conservation easements to permanently protect farmlands (at least 3500 acres), easements to protect and preserve open space and the unique biological resources of the GEA (10,000 acres), and measures to promote dense urban growth around HST stations that will serve as transportation hubs. These mitigation strategies will also address any secondary effects of urbanization and ensure that they are less than significant. The Authority will work with local governments, which are the entities that make local land use decisions about the extent and location of urban growth within their jurisdictions, to establish policies and principles that promote TOD, provide incentives for smart growth and infill development around stations, and limit urban expansion into new areas.

<u>Design, Mitigation, and Coordination Measures Deferred to Future Project-Level Analyses</u>

The USEPA commended the Authority and FRA for identifying multiple measures for future project-level analyses and appreciated the compilation of mitigation measures in

one location. They further recommend that the MMRP be included with the FRA's ROD. The FRA has included the MMRP as Appendix A to the ROD.

12.2 Union Pacific Railroad, Scott D. Moore

Mr. Moore submitted a letter received on July 7, 2008 in response to the publication of the notice of the Final Program EIR/EIS. The letter discusses the limited railroad rights-of-way to meet future freight transportation needs of the state and that the San Jose to Gilroy rights-of-way is narrow and bounded by a major arterial highway and the UPRR cannot give up an exclusive right-of-way to HST. Mr. Moore claims that a loss of 50 feet of the UPRR right-of-way along the Central Valley line would render future freight rail expansion impossible and disrupt rail-served businesses and prevent serving new industries from locating on one or both sides of the rail. The UPRR does not own the right-of-way for the Caltrain corridor between San Francisco and San Jose but has a freight easement. Imposing two exclusive tracks for HST would end the UPRR's ability to provide freight service to customers, including the Port of San Francisco. The UPRR also has the same issue between Sylmar and Los Angeles. Mr. Moore asks the Authority Board not to jeopardize UPRR's ability to provide such freight service or to assume the HST will have no impact. The UPRR urges the Board to carefully consider corridor routes that do not utilize the UPRR's rights-of-way.

To minimize potential environmental impacts from the HST system, the Authority's objective has been to maximize the use of existing transportation corridors and rights-of-way for the HST system. Consistent with this objective, extensive portions of the alignment alternatives were described and analyzed as if they were placed within or adjacent to existing rail or highway rights-of-way, rather than on new alignment. Evaluations for the previous statewide HST system program EIR and for the current Final Program EIR/EIS prepared for the Bay Area to Central Valley have consistently shown a potential for fewer significant environmental impacts along existing transportation facilities than on new alignments through both developed and undeveloped areas.

At the same time that the Authority has attempted to minimize environmental impacts by locating alignment alternatives within or adjacent to existing transportation rights-of-way, the EIR does not assume or rely on the availability of existing transportation rights-of-way for its analysis. Figures 2.3-6, 2.3-7, and 2.3-8 in the Final Program EIR depict typical cross sections for HST facilities at grade, on an elevated structure, and where twin tunnels might be necessary. These figures show maximum proposed rights-of-way of 100 feet, 50 feet, or 120 feet for these facilities, respectively. At the programmatic level, this EIR has analyzed the impacts of constructing and operating the HST system along the proposed alignment alternatives conservatively, by evaluating direct and indirect impacts within a wide band that exceeds the maximum proposed HST right-of-way, whether in an existing transportation right-of-way or adjacent to it. For example, for biological impacts, the EIR defines the study area for direct biological impacts as 50 feet on either side of the alignment, and for indirect impacts as 1,000 feet in urban areas and 0.25 mile in rural areas on each side of the alignment. At the project level, when detailed field conditions, resource data, and site-specific facility design information become available, certain impacts disclosed in the Program EIR are expected to be far

less in those circumstances when the actual final footprint of HST track can be located within existing rights-of-way, rather than adjacent to them.

The Program EIR/EIS does not assume use of the UPRR right-of-way between San Jose and Gilroy. In the Central Valley, the assumption was predominately that the alignment would be adjacent to the UPRR right-of-way. Between San Francisco and San Jose, the configuration assumed shared operations with Caltrain express services, but would not share tracks and would not impact freight operations. A considerable amount of aerial structure is assumed to be needed within or adjacent to the UPRR to avoid impacts to industry along the railroad. This will be looked at in more detail at the project level.

12.3 California Department of Fish and Game—Central Region, W.E. Loudermilk

The CDFG submitted comments on the Final Program EIR/EIS on July 7, 2008. The CDFG continues to have concerns related to potential impacts that may occur from the project on CDFG-owned or managed lands, wildlife movement, threatened and endangered species and sensitive habitats. The CDFG claims that the Program EIR/EIS does not contain the information needed for the Authority and FRA to make an informed decision on selection of a preferred alignment. The CDFG indicates that the Program EIR/EIS does not allow the Trustee Agencies and other reviewers the information necessary to compare differing impacts of each proposed alignment to specific species, habitats, and wildlife movement areas so that an informed decision can be made.

As a programmatic document, the FRA's and Authority's Program EIR/EIS did not analyze detailed, site-specific impacts of future projects to construct sections of the HST system. For this reason, in selecting alignments and station locations, the Authority did not select, nor is the FRA concurring in, a precise footprint for improvements, but rather a conceptual corridor alignment subject to further refinement. Future tiered project-level environmental documents will assess the impacts of constructing and implementing individual HST projects for sections of the HST system and will examine specific project location alternatives for the selected corridor alignment and alternative station sites for the selected location options, utilizing design practices and mitigation strategies described in the EIR/EIS and the Authority's decision documents to avoid and minimize impacts to the greatest extent possible including impacts to local, state, and federally-owned or managed lands, specific species, habitats, and wildlife movement areas among others.

The CDFG raises the following concerns related to responses to comments included in the Final Program EIR/EIS:

S006-3 – It is unclear to the CDFG how the HST would improve the ability of residents and tourists to access the wildlife areas as noted in Response S006-3 since HST would have no affect on accessibility between the Bay Area and Los Banos. The CDFG believes that the HST would not increase public access to wildlife areas but result in a decrease in public access and recreational opportunities by limiting hunting, especially in the Upper Cottonwood Creek Wildlife Area (UCCWA).

The entire response for S006-3, in the Final Program EIR/EIS, stated that the HST would also have beneficial effects in terms of adding to conservation efforts. In further responses to CDFG, in the Final Program EIR/EIS, in the MMRP (Appendix A, pages 12-14), and in the CEQA Findings (July 8, 2008), the Authority commits to acquire agricultural, conservation, and/or open space easements to mitigate potential impacts in and around the GEA, which is in the vicinity of the UCCWA. This was further identified to be at least 10,000 acres in agricultural, conservation and/or open space easements in the vicinity of GEA. In addition, the Authority has committed to acquire least 3,500 acres in conservation or other easements for farmland protection, an additional benefit to wildlife. These commitments would make for larger protected areas and potentially larger areas for the public to access and depending on the decisions of local land managers could provide expanded access for hunters. Impacts from the HST on recreational opportunities and hunting at all CDFG-owned or managed lands will be looked at in more detail at the project level.

S006-4 – CDFG identified that the UCCWA along with other potential impacts to CDFG-owned or managed lands were not included in the Draft Program EIR/EIS. The CDFG noted that the Authority and FRA did not recirculate the Draft Program EIR/EIS as recommended by the CDFG.

The Authority and FRA disagree that the Draft Program EIR/EIS needed to be recirculated. The Program EIR/EIS provides sufficient information to make findings regarding the potential environmental impacts of various alignment alternatives and station location options and make meaningful comparisons, thus allowing for identification of a preferred alternative and selection of conceptual corridor alignments and station location options.

The CDFG recognizes that the use of tunnels would reduce biological impacts on the UCCWA, but notes that a tunnel crossing the entire UCCWA would be more effective. The CDFG also notes that a wildlife movement and vehicle strike impact analysis will be required. They also note that an above-ground HST in the western half of the UCCWA could severely limit public hunting and effectively reduce the hunted area of UCCWA by at least half. CDFG states that hunting would not be allowed to continue at its current level on this portion of their property due to public safety and liability issues.

The alignments presented in the Final Program EIR/EIS are representative and conceptual, and although shown in concept to allow analysis of impacts, variations will be considered in and near sensitive areas such as the UCCWA as part of project-level analysis to minimize impacts, after which decisions will be made as to final placement of alignments. The Authority will undertake detailed biological studies as part of the project-level analysis that include wildlife movement, animal strikes, and hunting to determine impacts and appropriate mitigations.

S006-5 – CDFG states that neither the response in the Final Program EIR/EIS to their comment nor the Final Program EIR/EIS address the fact that the HST would be crossing half of the GEA at-grade. The CDFG notes that the Authority and FRA have made no determination as to the placement and number of wildlife crossings so their effectiveness cannot be determined. CDFG does not understand the response that the HST would not further fragment the GEA since the tracks would need to have a barrier

on either side. The CDFG further notes that Henry Miller Road is not a major roadway and is mainly used for local and seasonal farming traffic and that it is incorrect to give it equal weight in discussions of animal movement impacts as compared to the HST system.

Final Program EIR/EIS response S006-5 indicated that of the portion of the GEA crossed by the HST, half of that would be on elevated structure over some of the more sensitive areas along Henry Miller Road. The Authority will undertake detailed biological studies as part of the project-level analysis to determine wildlife movement corridors and the potential locations for crossings. Mitigation measures in the Final Program EIR/EIS and in the MMRP (Appendix A, pages 12-14) identify several times that appropriately sized and placed crossings (underpasses/bridges and /or culverts) will be constructed as part of the project to facilitate wildlife movement. The Authority and FRA will continue to work with the CDFG and other resource agencies as part of all biological analysis and mitigation development. The Authority has committed to elevate the HST alignment through the GEA area along a three-mile portion of Henry Miller Road to minimize impacts on sensitive areas, including wetlands and habitat.

12.4 Stuart M. Flashman

Mr. Flashman, on behalf of the Planning and Conservation League, TRANSDEF, and the California Rail Foundation, submitted a letter dated June 2, 2008 in response to the publication of the notice of the Final Program EIR/EIS (A second letter to the Authority dated July 8, 2008 is addressed in Appendix B). The issues raised by Mr. Flashman are in addition to his comments on the Draft Program EIR/EIS (Comment Letter O007 dated October 25, 2007). Mr. Flashman references a letter received by the Authority from the UPRR dated May 13, 2008 and raises the issue of the HST being within the right-of-way of the UPRR. Mr. Flashman states that the Altamont and Pacheco alternatives analyzed in the Final Program EIR/EIS are predicated on the use of the UPRR right-of-way for significant portions. He further states that the UPRR's opposition to use of its right-of-way likely makes infeasible major portions of the alignments, and he requests that new alignments be analyzed. Mr. Flashman also states that the UPRR's opposition will require reassessment of major portions of the routing between San Francisco and Los Angeles that were addressed in the previous statewide program EIR/EIS, including the Palmdale area. He also states that the environmental analysis for these previously approved portions of the alignment be reopened to address the changed circumstances before those portions can proceed to project-level decisions.

Mr. Flashman claims that since changes in circumstances, not considered in the Final Program EIR/EIS and which the public has not had the opportunity to comment on, the Final Program EIR/EIS needs to be withdrawn and a revised Draft Program EIR/EIS be prepared and circulated.

FRA and Authority staff disagree with the characterization of the right-of-way issues in this comment letter or the letter's suggestion that the Final Program EIR/EIS needs to be revised and recirculated.

To minimize potential environmental impacts from the HST system, the Authority's objective has been to maximize the use of existing transportation corridors and rights-of-way for the HST system. Consistent with this objective, extensive portions of the alignment alternatives were described and analyzed as if they were placed within or adjacent to existing rail or highway rights-of-way, rather than on new alignment. Evaluations for the previous statewide HST system program EIR/EIS and for the Bay Area to Central Valley Final Program EIR/EIS have consistently shown a potential for fewer significant environmental impacts along existing transportation facilities than on new alignments through both developed and undeveloped areas.

At the same time that the Authority has attempted to minimize environmental impacts by locating alignment alternatives within or adjacent to existing transportation rights-of-way, the Program EIR/EIS does not assume or rely on the availability of existing transportation rights-of-way for its analysis. Figures 2.3-6, 2.3-7, and 2.3-8 in the Final Program EIR/EIS depict typical cross sections for HST facilities at grade, on an elevated structure, and where twin tunnels might be necessary. These figures show maximum proposed rights-of-way of 100 feet, 50 feet, or 120 feet for these facilities, respectively. At the programmatic level, the Program EIR/EIS has analyzed the impacts of constructing and operating the HST system along the proposed alignment alternatives conservatively, by evaluating direct and indirect impacts within a wide band that exceeds the maximum proposed HST right-of-way, whether in an existing transportation right-of-way or adjacent to it. For example, for biological impacts, the Program EIR/EIS defines the study area for direct biological impacts as 50 feet on either side of the alignment, and for indirect impacts as 1,000 feet in urban areas and 0.25 mile in rural areas on each side of the alignment. At the project level, when detailed field conditions, resource data, and site-specific facility design information become available, certain impacts disclosed in the Program EIR/EIS are expected to be far less in those circumstances when the actual final footprint of HST track can be located within existing rights-of-way, rather than adjacent to them.

Recirculation is required under the CEQA when there is "significant new information" that arises prior to certification of a final EIR. "Significant new information" is limited to circumstances involving:

(1) A new significant environmental impact would result from the project or from a new mitigation measure proposed to be implemented.
(2) A substantial increase in the severity of an environmental impact would result unless mitigation measures are adopted that reduce the impact to a level of insignificance.
(3) A feasible project alternative or mitigation measure considerably different from others previously analyzed would clearly lessen the environmental impacts of the project, but the project's proponents decline to adopt it.
(4) The draft EIR was so fundamentally and basically inadequate and conclusory in nature that meaningful public review and comment were precluded. (*Mountain Lion Coalition v. Fish and Game Com.* (1989) 214 Cal.App.3d 1043)

(CEQA Guidelines, § 15088.5; see also Pub. Resources Code, § 21092.1)

Because the environmental analysis in the Final Program EIR/EIS is not dependent on the availability of any railroad right-of-way, the analysis remains accurate even in light of the May 2008 letter from UPRR to the Authority. A revision and recirculation of the Bay Area to Central Valley Program EIR/EIS is therefore not necessary.

Also refer to Section 12.2, above, regarding an additional response to a follow-up letter from UPRR to the Authority dated July 7, 2008.

12.5 Juliana Michael

Juliana Michael submitted a letter on the Final Program EIR/EIS to FRA dated June 30, 2008. Ms. Michael identified a number of additional statewide needs for the HST system. Of these, she identifies that the HST would relieve dependence on petroleum-based transportation, reduce atmospheric heat and greenhouse gases, improve travel efficiency and diversification of energy use, help reduce travel delay costs related to congestion, and disperse land use pressures to save more open space and farm land areas.

Ms. Michael also identifies that clean electric power for the HST could be generated in 10 different ways including: solar photovoltaic, geothermal heat, hydro-electric power, ocean wave capture, solar mirror concentrator cauldrons, natural gas, low emission coal-fired plants near a source of environmentally sensitive selective-cut logging, wind generation in the Coast Range, and nuclear power plants.

Ms. Michael also would like for the trains to include radar technology as a safety warning system for on track impediments.

The FRA would like to thank Ms. Michael for her input on more focused needs and ideas related to energy supply. The FRA will consider this input in future project-level environmental review.

13. Corrections to the Final Program EIR/EIS

Prior to the CEQA certification process, Authority staff review of certain calculations used to estimate reductions in air pollutant emissions and energy consumption projected to result with operation of the HST system resulted in the discovery of an error in stated air quality and energy benefits and the need for the corrections. An Addendum/Errata, included in this record of decision as Appendix C, was prepared and made generally available in June 2008, that revises the discussion of air quality and energy benefits associated with the HST alternative as presented in the Final Program EIR/EIS. These minor technical corrections are appropriately addressed in the Addendum/Errata as part of the Final Program EIR/EIS. The corrections do not constitute changes in the proposed HST system, and therefore do not result in new or increased adverse environmental impacts or any changes to the discussion of adverse environmental impacts from the HST system. Additionally, the corrections do not result in any changes in the circumstances under which the HST system will be pursued that would require

changes in the proposed HST system, and do not make feasible any alternatives or mitigation strategies that were considered infeasible. These corrections do not trigger the need to prepare a supplement, per the requirements of the CEQ's NEPA regulations (40 CFR 1502.9[c][1]). Finally, the changes are equivalent for the representative Network Alternatives and therefore have no bearing on the identification or selection of a Preferred Alternative.

14. Factors Considered in Making This Decision

The purpose of the Bay Area to Central Valley HST is to provide a reliable high-speed electrified train system that links the major Bay Area cities to the Central Valley, Sacramento, and Southern California, and that delivers predictable and consistent travel times. Further objectives are to provide interfaces between the HST system and major commercial airports, mass transit, and the highway network and to relieve capacity constraints of the existing transportation system in a manner sensitive to and protective of the Bay Area to Central Valley region's and California's unique natural resources.

The Final Program EIR/EIS and Section 5 Purpose and Need, above, outline the objectives that the Authority has adopted, including, "maximize intermodal transportation opportunities by locating stations to connect with local transit, airports, and highways" and states that the Authority's statutory mandate is to plan, build, and operate a HST system that is "coordinated with the state's existing transportation network, particularly intercity rail and bus lines, commuter rail lines, urban rail transit lines, highways, and airports."

In the 2005 ROD for the statewide program EIR/EIS, the Authority and FRA found that taking no action under the No Project Alternative would not meet the intercity travel needs projected for the future (2030 and beyond) as population continues to grow, and would fail to meet the purpose and objectives of the HST program. Considering the updated ridership forecasts developed for this Program EIR/EIS, the FRA and Authority reaffirmed that the HST system statewide, as well as within the Bay Area to Central Valley study region, offers environmental benefits in the areas of traffic, air quality, and energy use, whereas the No Project Alternative would result in increased traffic congestion, deteriorating air quality, and reduced transportation energy efficiency. The Program EIR/EIS No Project Alternative does not meet the project purpose or project objectives.

Overall, implementing the HST system in the Bay Area to Central Valley study region would greatly increase the capacity for intercity and commuter travel and reduce existing automobile traffic in specific travel corridors. Full grade-separation along Bay Area rail corridors used by the HST would improve local traffic flow and reduce air pollution at existing rail crossings. The more extensive the HST system implemented in the Bay Area, the greater the travel condition benefits, including increased connectivity to other transit systems, increased convenience, increased reliability, and improved travel times. In particular, more direct connections to the region's airports provide increased connectivity for air transportation system riders.

Recognizing the benefits described above, as well as other attributes, the cities of San Francisco, Oakland, and San Jose all strongly support direct HST service to their respective downtowns. This support was expressed in comments on the Draft Program EIR/EIS, and is consistent with comments/input provided by these cities over the ten years since the Authority was created. MTC, the regional transportation planning and programming agency for the Bay Area, supports direct HST service to the downtowns of each of these three major Bay Area urban centers.

The network alternatives described in the Final Program EIR/EIS present information about overall effects of combinations of HST alignment alternatives and station location options to implement the HST system in the study region. Alignment or station site-specific impacts and effects will be discussed in subsequent project phase reviews.

The network alternatives fall among the three basic approaches for linking the Bay Area and Central Valley: Altamont Pass (11 network alternatives); Pacheco Pass (six network alternatives); and Pacheco Pass with Altamont Pass (local service) (four network alternatives). The network alternatives vary in the degree they serve urban areas/centers and international airports. All but one would provide direct HST service to (i.e., include a HST station within) one and up to three of the major urban centers in the Bay Area—San Francisco, San Jose, and Oakland. Some of the network alternatives would provide service to one or more of the three Bay Area international airports at San Francisco, Oakland, and San Jose. Connectivity and enhancement of other transit systems (e.g. ACE, Caltrain, Capitol Corridor, BART, and Valley Transportation Authority) also vary greatly among the network alternatives.

A number of network alternatives clearly do not meet the purpose and need for the HST system. For instance, the Altamont Pass network alternative that terminates in Union City fails since it does not provide direct HST service to San Francisco, Oakland, or San Jose (the major Bay Area cities) nor does it provide interface with the major commercial airports. Also failing are a Pacheco Pass network alternative that terminates in San Jose and three Altamont Pass network alternatives that only serve one of the three major urban areas/centers. These four alternatives directly provide HST service to at most only one major Bay Area city and one of the region's major commercial airports. Detailed evaluation of each network alternative appears in the Final Program EIR/EIS Chapter 7.

The Final Program EIR/EIS considered representative Altamont Pass network alternatives that encompass the range of combinations of HST alignment alternatives and station location options to implement the HST system via the Altamont Pass. While there are constructability issues and logistical constraints for all HST alternatives, the construction related issues and logistical constraints associated with the Altamont Pass alternatives are greater than those for the Pacheco Pass.

All Altamont Pass alternatives have considerable constructability issues through the right-of-way constrained Tri-Valley area (Livermore and Pleasanton) and tunneling/seismic issues in the Pleasanton Ridge/Niles Canyon area. Additionally, all Altamont Pass alignment alternatives have tunneling/seismic issues (Calaveras Fault) in the Pleasanton Ridge as well as seismic issues in the East Bay (Hayward Fault). For direct service to San Francisco, the most promising Altamont Pass alternatives require a

new San Francisco Bay crossing at Dumbarton, which must also go through the Don Edwards San Francisco Bay National Wildlife Refuge and the City of Fremont (which opposes construction of the east-west link through Fremont). Furthermore, for the Altamont Pass alternative serving Oakland, the MTC concluded that "development of an East Bay option with direct service to San Jose and Oakland would include significant right-of-way risk gaining an agreement from UPRR to provide access to Oakland." For the Altamont Pass East Bay link to San Jose, Caltrans District 4 has commented that use of the I-880 median would result in significant construction stage impacts between Fremont and San Jose.

The Final Program EIR/EIS considered representative Pacheco Pass with Altamont Pass (local service) network alternatives that encompass the range of different ways to combine HST alignment alternatives and station location options to implement the HST system via the Pacheco Pass and Altamont Pass. These combined network alternatives do not compare well against either single pass (Pacheco Pass or Altamont Pass) network alternatives for HST service. These network alternatives resulted in similar ridership and revenue forecasts, (with less revenue than comparable Pacheco Pass network alternatives), while having considerably higher capital costs ($4.4–6.0 billion more for comparable terminus station locations). Although the Pacheco Pass with Altamont Pass (local service) alternatives would increase connectivity and accessibility by potentially providing direct HST service to additional markets, these alternatives would have considerably higher environmental impacts, construction issues, and logistical constraints than Altamont or Pacheco Pass alternatives. The USEPA concluded that the Pacheco Pass with Altamont Pass (local service) network alternatives are not likely to contain the LEDPA.

The Final Program EIR/EIS considered representative Pacheco Pass network alternatives that encompass the range of different ways to combine HST alignment alternatives and station location options to implement the HST system via the Pacheco Pass. The Pacheco Pass alternatives with the greatest environmental impacts and greatest construction issues are the two alternatives that include a new transbay tube across San Francisco Bay. Pacheco Pass network alternatives that extend up the East Bay present logistical constraints that render them infeasible due to right-of-way constraints and duplicate investment between Oakland and San Jose, risk of reaching agreement with UPRR along the Niles Subdivision, potential Environmental Justice concerns through existing urbanized areas in the East Bay, and right-of-way constraints within I-880 south of Fremont that could result in a long process with Caltrans. The Oakland and San Jose termini alternative along the East Bay would be less capable of meeting the project purpose and need and project objectives because it would not provide direct HST service to SFO (northern California's major hub airport), the San Francisco Peninsula (Caltrain Corridor), and downtown San Francisco, the major transit, business, and tourism center of the region. The network alternative that serves San Francisco, Oakland, and San Jose without a new bay crossing provides the highest level of connectivity and accessibility to the Bay Area of the Pacheco Pass network alternatives, but would have higher environmental impacts due to the added length and would generate considerably less revenue due to the splitting of HST services between the San Francisco Peninsula and the East Bay.

The evaluation of the Final Program EIR/EIS concludes that the Pacheco Pass network alternative serving San Francisco and San Jose termini is more effective in meeting the project purpose and need. This network alternative would provide HST direct service to downtown San Francisco, SFO, and the San Francisco Peninsula while minimizing potential environmental impacts and acquisition/logistical constraints by maximizing use of existing rail right-of-way through shared-use with improved Caltrain commuter services. The HST is complimentary to Caltrain and would share tracks with express Caltrain commuter rail services. In addition, this alternative provides direct service to northern California's major hub airport at SFO and major transit, business, and tourism center at downtown San Francisco, and would enable the early implementation of the HST/Caltrain section between San Francisco, San Jose, and Gilroy. A number of local and regional agencies, including the MTC, support HST to San Francisco via San Jose and the San Francisco Peninsula. In addition to meeting the program objectives, this network alternative would also provide environmental benefits in the form of increased efficiency in energy use for transportation, decreased energy consumption [e.g., oil fuels consumption], improved air quality and reduction of greenhouse gases, improved travel conditions (including mobility, safety, reliability, travel times, and connectivity and accessibility) and reduced VMT for intercity trips. The FRA and Authority also identified that this network alternative has the benefit of minimizing land consumption needs, by promoting dense development near HST stations, and providing permanent protection for agricultural lands, open space, and wildlife habitat through mitigation in the form of conservation easements that would not be available otherwise. Given the environmental benefits it would provide and relative potential for adverse environmental impact, the Pacheco Pass network alternative serving San Francisco and San Jose termini is the environmentally preferable alternative.

15. Decision

Concluding the Bay Area and Central Valley HST Program EIR/EIS, the FRA makes the following decisions:

1. To select the Pacheco Pass Network Alternative with San Francisco and San Jose Termini and to reject the No Project Alternative, the Altamont Pass Network Alternatives, and the Pacheco Pass with Altamont Pass (Local Service) Network Alternatives; and
2. To adopt the design practices and mitigation strategies described in the MMRP (Appendix A) to minimize harm from the selected alternative; and
3. To eliminate certain conceptual HST alignments and station options evaluated in the Program EIR/EIS from further consideration; and
4. To select for further consideration in the tiered project environmental reviews to be prepared subsequent to the Program EIR/EIS, the preferred conceptual corridor, alignment, and station options for the HST as described in the Final Program EIR/EIS.

The Bay Area to Central Valley HST Program EIR/EIS is the second part of programmatic analysis in the tiered environmental review process and the FRA, in

cooperation with the Authority, is making initial and basic decisions on the proposed HST system between the Bay Area and Central Valley. The Program EIR/EIS considers the comprehensive nature and scope of the proposed HST system, at the conceptual stage of planning and decision-making, including potential route and station locations. FRA's decisions select conceptual corridors and station locations for further analysis.

The Authority considered and made similar decisions when certifying the Final Program EIR/EIS under CEQA on July 9, 2008. As appropriate, the Authority may also pursue preservation of right-of-way in selected corridors and at station locations through protective advance acquisition consistent with the Federal Uniform Relocations Assistance and Real Property Acquisitions Policies Act and Federal and State law.

Subsequent future tiers involving project-level environmental review will examine a range of HST project alternatives in specific detail as sections of the proposed HST system are advanced within corridors selected in the Program EIR/EIS. Within these reviews, the no action alternative will be examined as well. Project-level reviews will fully describe site-specific design and land acquisition as well as environmental impacts, and mitigation measures to address those impacts. The FRA and the Authority will assess the site characteristics, size, nature, and timing of proposed specific projects to determine whether the impacts are potentially significant and whether impacts can be avoided or mitigated. Mitigation strategies will be considered in relation to potential impacts and mitigation measures advanced where appropriate.

Because the Program EIR/EIS does not assess future actions to implement an HST system at specific locations, this decision does not determine site specific-impacts or specific mitigation measures appropriate for mitigating those impacts. Conversely, the Program EIR/EIS identifies design practices and mitigation strategies, which are an array of actions that can be applied at the project-level to avoid, minimize, or mitigate the types of environmental impacts anticipated as a result of implementation of the HST system, but does not analyze them in relation to specific project sites. To minimize potential future environmental harm from cumulative implementation of the proposed HST system, the FRA adopts the design practices and mitigation strategies in the MMRP included as Appendix A.

Implementing the HST system in the Bay Area to Central Valley study region would result in significant environmental impacts. The decision of how to implement the HST system in the Bay Area to Central Valley study region therefore involves a balancing consideration of how the alternatives meet the project purpose with the different types and degrees of environmental impacts in different locations. The Preferred Pacheco Pass Network Alternative would contribute to achieving the distinct benefits of the HST system as a whole, including improved transportation and reduced congestion, improved air quality, energy savings, and greater opportunities for smart-growth land use planning. At the same time, the Preferred Pacheco Pass Network Alternative has less adverse impacts on the environment overall and is environmentally preferable. The FRA therefore finds that the transportation, environmental, land use, economic, and social benefits of the Preferred Pacheco Pass Network Alternative outweigh the adverse environmental impacts that will remain after adoption and application of all mitigation strategies listed in this document.

S. Mark Lindsey
Acting Deputy Administrator
Federal Railroad Administration

Date: 12/2/08

Attachments:

Appendix A – Mitigation Monitoring and Reporting Plan

Appendix B – Summary of and Brief Response to Comments on the Final Bay Area to Central Valley High-Speed Train Program EIR/EIS

Appendix C – Addendum/Errata to Final Program EIR/EIS for the Bay Area to Central Valley Portion of the California HST System

APPENDIX H

TECHNICAL REPORT ORGANIZATION AND FORMAT INSTRUCTIONS

AVAILABLE ON THE CALIFORNIA HIGH-SPEED RAIL AUTHORITY WEBSITE:
http://www.cahighspeedrail.ca.gov/library.aspx

TECHNICAL REPORT ORGANIZATION

Document Outlines for Preparing Technical Reports

Preparation of Environmental Technical Reports

This section of the memorandum prescribes the format for preparing a series of technical reports as part of the process of producing a project environmental impact report/environmental impact statement (EIR/EIS) for the high-speed train (HST) project. These reports are described in the Authority's Project-Level Environmental Analysis Methodologies, Version 2, dated February 2009.

As described in the methods, eleven (11) reports are to be prepared addressing the following topics: Transportation; Air Quality; Noise and Vibration; Biological Resources and Wetlands (NES); Hydrology and Water Resources; Geology, Soils and Seismicity; Hazardous Materials/Wastes; a Community Impact Assessment (CIA); Aesthetics and Visual Quality; Cultural Resources; and a Draft Relocation Impact Report. These reports are to be prepared following the formatting guidelines described in the Caltrans Standard Environmental Reference (SER) located at: http://www.dot.ca.gov/ser/vol1/vol1.htm.

The length of the technical reports should be no more than 100 to150 pages, focusing on the most relevant information; all other detailed information is to be located in appendices.

Transportation (Traffic, Transit, Circulation, Parking and Freight Rail)

Table of Contents
List of Abbreviated Terms
1.0 Introduction
2.0 Project Description
3.0 Methodology
  3.1 Analysis Methodologies
  3.1 Significance Criteria
4.0 Existing Conditions
5.0 Impact Analysis
6.0 Mitigation Measures
7.0 References
8.0 Preparer Qualifications
Appendix

Air Quality

Table of Contents
List of Abbreviated Terms
1.0 Introduction
2.0 Project Description
3.0 Regional Meteorology and Climate
4.0 Regulatory Framework
  4.1 Applicable Regulations
  4.2 Regulatory Agencies
5.0 Existing Conditions
6.0 Impact Analysis

7.0 Mitigation Measures
8.0 Project-level Conformity Documentation
9.0 References
10.0 Preparer Qualifications
Appendix with Results of Emissions Modeling Done for Analysis

Noise and Vibration

Table of Contents
List of Abbreviated Terms
1.0 Introduction
2.0 Project Description
3.0 Noise and Vibration Descriptors
- 3.1 Noise
- 3.2 Ground-Borne Noise and Vibration

4.0 Noise and Vibration Impact Criteria
- 4.1 Noise Impact Criteria
- 4.2 Vibration Impact Criteria

5.0 Existing Noise and Vibration Conditions
- 5.1 Existing Noise Environment
- 5.2 Vibration Conditions

6.0 Noise and Vibration Prediction Methodology
- 6.1 Noise
- 6.2 Ground-borne Noise and Vibration

7.0 Noise and Vibration Impact
- 7.1 Noise Impact Assessment
- 7.2 Ground-borne Vibration Impacts
- 7.3 Construction Noise and Vibration Analysis
  - 7.3.1 Criteria/Local Noise Regulations
  - 7.3.2 Construction Noise Impacts
  - 7.3.3 Construction Vibration Impacts

8.0 Mitigation Analysis
9.0 Recommendations
10.0 References
11.0 Preparer Qualifications
Appendix

Biological Resources and Wetlands

Several different reports are to be prepared, including a Biological Resources and Wetlands Technical Report, a Wetland Delineation Report, and, if needed, a Biological Assessment. Each report is described below.

Biological Resources and Wetlands

Table of Contents
List of Abbreviated Terms
1.0 Introduction
2.0 Project Description
3.0 Study Methods
4.0 Results: Environmental Setting
  4.1 Description of the Existing Biological and Physical Condition
  4.2 Regional Species and Habitats of Concern
5.0 Results: Biological Resources, Discussion of Impacts and Mitigation
  5.1 Discussion of Natural Community "X"
  5.2 Special Status Plant Species
  5.3 Special Status Animal Species Occurrences
6.0 Results: Permits and Technical Studies for Special Laws or Conditions
  6.1 Federal Endangered Species Act Consultation Summary
  6.2 Federal Fisheries and Essential Fish Habitat Consultation Summary
  6.3 California Endangered Species Act Consultation Summary
  6.4 Wetlands and Other Waters Coordination Summary
  6.5 Invasive Species
  6.6 Other
7.0 References
8.0 Preparer Qualifications
Appendix

Wetlands Delineation Report

Table of Contents
List of Abbreviated Terms
1.0 Introduction
  1.1 Project Description
  1.2 Purpose of the Assessment
2.0 Project Setting
  2.1 Vegetation Community
  2.2 Hydrology
  2.3 Soils
3.0 Methodology
  3.1 Pre-Survey Investigations
  3.2 Field Survey
4.0 Results
  4.1 Summary Table of Wetland Impacts
  4.2 Wetland Functions and Values
5.0 Discussion
6.0 References and Personal Communications Cited
7.0 Preparer Qualifications
Appendix

Biological Assessment (If Needed)

Table of Contents
List of Abbreviated Terms
1.0 Introduction
- 1.1 Purpose of the Document
- 1.2 Proposed Action

2.0 Project Description
- 2.1 Project Elements
- 2.2 Location and Project Timing
- 2.3 Map Delineating Location of Each Project Element
- 2.4 Conservation Measures to be Incorporated into Project Design

3.0 Action Area
- 3.1 Geographic Area to be Affected
- 3.2 Specific Areas to be Affected by Each Project Element
- 3.3 Ongoing Activities Affecting Species or Habitat

4.0 Species/Critical Habitat Considered
5.0 Effects Analysis
6.0 Conclusion and Determination of Effects for Each Protected Resource
7.0 References
8.0 Prepared Qualifications
Appendix

Hydrology and Water Resources

Table of Contents
List of Abbreviated Terms
1.0 Introduction
2.0 Project Description
3.0 Regulatory Framework
4.0 Existing Water Resources
- 4.1 Floodplains
- 4.2 Surface Water Hydrology
- 4.3 Surface Water Quality
- 4.4 Groundwater

5.0 Impact Analysis
- 5.1 Floodplains
- 5.2 Surface Water Hydrology
- 5.3 Surface Water Quality
- 5.4 Groundwater

6.0 Mitigation Measures
7.0 References
8.0 Preparer Qualifications

Geology, Soils and Seismicity

Table of Contents
List of Abbreviated Terms
1.0 Introduction
2.0 Project Description
3.0 Geology of the Project Area
4.0 Geologic and Seismic Impacts
5.0 Mitigation Measures
6.0 References
7.0 Preparer Qualifications
Appendix

Hazardous Materials/Wastes

Table of Contents
List of Abbreviated Terms
1.0 Introduction
2.0 Project Description
3.0 Records Review and Site Reconnaissance
4.0 Results of Analysis
- 4.1 Findings
- 4.2 Opinion
- 4.3 Data Gaps
- 4.4 Conclusions/Deviations

5.0 Mitigation Measures
6.0 References
7.0 Preparer Qualifications and Professional Statement
Appendix

Community Impact Assessment

Table of Contents
List of Abbreviated Terms
1.0 Introduction
2.0 Project Description
3.0 Regulatory Framework
4.0 Existing Conditions
- 4.1 Land Use Characteristics
- 4.2 Farmland
- 4.3 Social
- 4.4 Relocation of Housing and Businesses
- 4.5 Economics

5.0 Impact Analysis
- 5.1 Growth Inducement
- 5.2 Consistency with Local and Regional Plans
- 5.3 Farmland Impacts
- 5.4 Social Impacts
- 5.5 Relocation Impacts
- 5.6 Economic Impacts

6.0 References
7.0 Preparer Qualifications
Appendix

Aesthetics and Visual Quality

Table of Contents
List of Abbreviated Terms
1.0 Introduction
2.0 Project Description
3.0 Assessment Method
4.0 Visual Environment of the Project
5.0 Existing Visual Resources and Viewer Response
  5.1 Method of Visual Resource Analysis (e.g., Visual Character, Quality)
  5.2 Existing Visual Resources
  5.3 Methods of Predicting View Response
  5.4 Existing Viewer Sensitivity
  5.5 Existing Viewer Groups, Exposure, Awareness
6.0 Visual Impact Assessment
  6.1 Method of Assessing Project Impacts
  6.2 Definition of Visual Impact Levels
  6.3 Analysis of Key Views
7.0 Visual Mitigation
8.0 References
9.0 Preparer Qualifications
Appendix

Cultural Resources

Several reports are to be prepared that follow the Section 106 guidance, including an Archaeological Survey Report and a Historic Architecture Survey Report. Other documents to be prepared include a Finding of Effect, mitigation agreement and a treatment plan. Individuals preparing these reports should also refer to specific documentation guidance provided in the Programmatic Agreement between the Advisory Council on Historic Preservation, Federal Railroad Administration, the California High-Speed Rail Authority, and the State Historic Preservation Officer (SHPO).

Archeological Survey Report

Table of Content
Abbreviations
1.0 Management Summary/Abstract
2.0 Undertaking Information/Introduction
3.0 Setting
4.0 Research Design (and Area of Potential Effect)
5.0 Methods
6.0 Report of Findings
7.0 Discussion / Interpretation
8.0 Management Considerations
9.0 References
10.0 Preparer Qualifications
Appendix

Historic Architecture Survey Report

Table of Content
Abbreviations
1.0 Introduction
- 1.1 Description of the Undertaking
- 1.2 Area of Potential Effect Description
- 1.3 Map Depicting Area of Potential Effect and Project Impacts

2.0 Identification
- 2.1 Previous Work
- 2.2 Research Design
- 2.3 Methods
- 2.4 Acres Surveyed, Divided into Reconnaissance and Intensive

3.0 Findings
- 3.1 Description and Location of All Cultural Resources within the APE
- 3.2 Area of Potential Effect Map and Site Locations
- 3.3 National Register Evaluations
- 3.4 Historic Context Used in National Register Evaluation of Sites
- 3.5 Site by Site (or Group of Sites) Evaluation
- 3.6 Native American Consultation for Traditional Cultural Properties

4.0 Summary and Conclusions
- 4.1 Area of Potential Effect/Regional Archaeology/History in Light of Project Findings

5.0 Project Effects
- 5.1 Discussion of Specific Impacts to Historic Properties
- 5.2 Determination of Potential Effects to Historic Properties
- 5.3 Discussion of Avoidance Measures

6.0 References
7.0 Preparer Qualifications
Appendix A Appropriate Site Forms
Appendix B Correspondence (e.g., Native American Consultation Letters)

Draft Relocation Impact Statement (DRIS)

Table of Content
Abbreviations
1.0 Introduction
2.0 Project Description
3.0 Overview of Displacement Area
- 3.1 Population Characteristics
- 3.2 Household Characteristics
- 3.3 Economic Characteristics
- 3.4 Land Use and Community Facilities

4.0 Estimates of Residential and Nonresidential Displacements
5.0 Competing Displacement Needs
6.0 Relocation Resources Available to Displacees
- 6.1 Description of the Relocation Replacement Area
- 6.2 Availability

7.0 Relocation Policy and Impact Mitigation
8.0 References
9.0 Preparer Qualifications
Appendix A Displacement Summary
Appendix B California Department of Transportation, Title VI Policy Statement
Appendix C Caltrans Draft Relocation Impact Report (DRIR)

THIS PAGE INTENTIONALLY LEFT BLANK

FORMAT INSTRUCTIONS

CALIFORNIA HIGH-SPEED TRAIN

DRAFT

Document Preparation and General Formatting **Guidelines**

June 2010

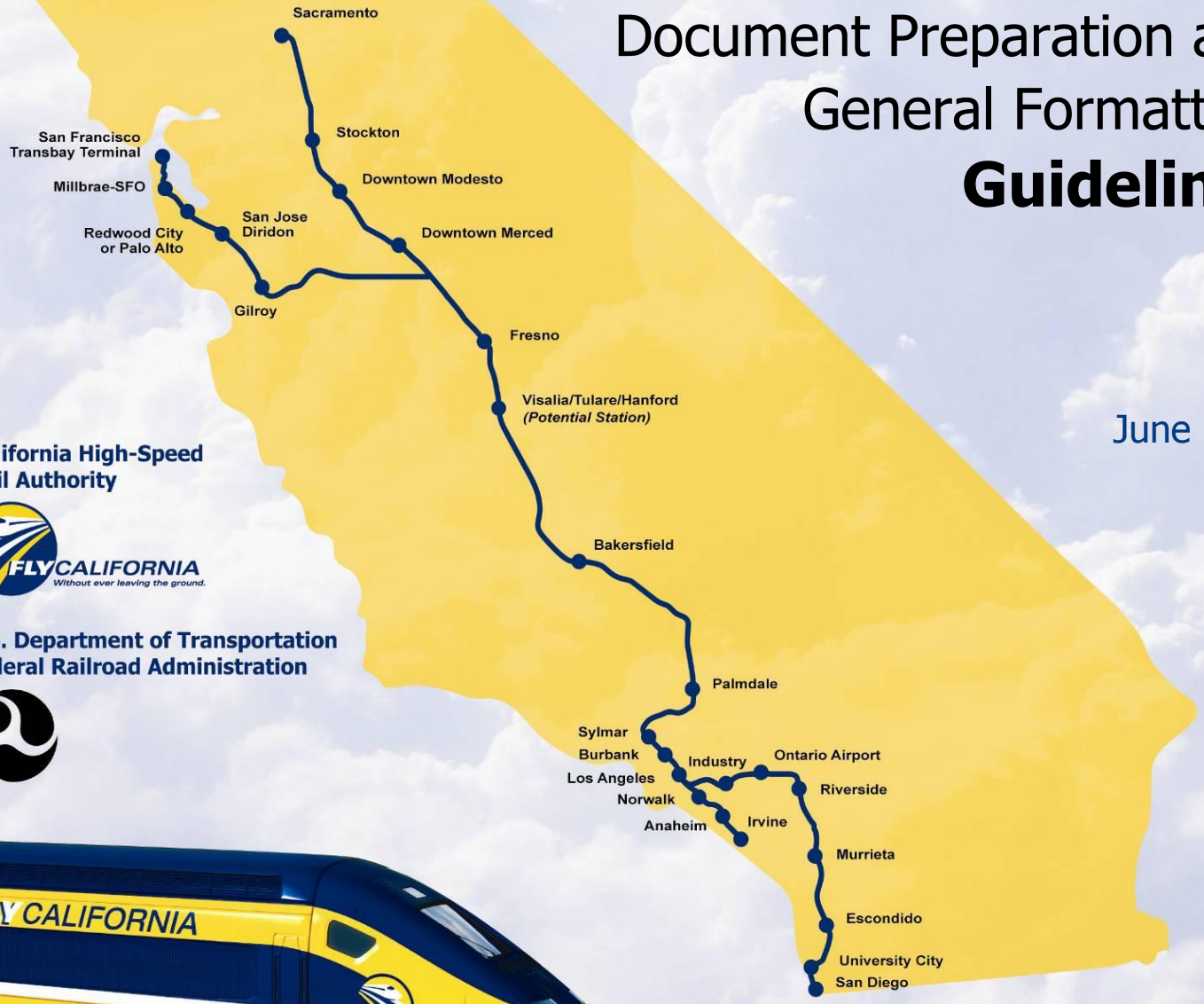

California High-Speed Rail Authority

FLY CALIFORNIA
Without ever leaving the ground.

U.S. Department of Transportation
Federal Railroad Administration

CALIFORNIA HIGH-SPEED TRAIN PROJECT EIR/EIS

Document Preparation and Formatting Guidelines

Prepared by:

CH2M HILL

June 2010

Table of Contents

1.0 California High-Speed Train Project EIR/EIS Style Guidelines 1-1
1.1 Introduction 1-1
1.2 List of Words and Terms 1-2
1.3 Using the Document Template.....1-2
1.4 List of Words and Terms 1-2

Appendices

A Quality Control Cover Sheet and Version Control

B Document Template and Example

C Document Cover Sheet Guidelines

D Glossary, Design Terms, and Acronyms

1.0 California High-Speed Train Project EIR/EIS Style Guidelines

1.1 Introduction

With several consultant teams preparing project environmental and public documents in addition to the California High-Speed Rail Authority (Authority) and program manager, a common understanding of key program terms is needed. A number of terms with specific meaning for the high-speed train (HST) program are defined below. It is easy to become confused by mixing terms defined in contracts or other documents with those that have been defined in the public record. For instance, regional team contractors have been hired for segments of the HST system but their areas of responsibility do not correspond with geographic regions, and *segment* has a particular and problematic meaning in NEPA case law. *Segment* is best not used at all except to refer to subcomponents of HST sections being studied and the project teams are better thought of as corridor teams.

Although the *Chicago Manual of Style* and other resources from the contractors will be essential to these materials, the Federal Railroad Administration (FRA) also maintains a list of common words used in FRA program publications which generally follows the U.S. Government printing Office (GPO) style manual. One of the most nettlesome issues is the treatment of compound terms. The GPO Style Manual general rule is to omit hyphens when words appear in regular order. "Where meaning is clear and readability is not aided, it is not necessary to use a hyphen to form a temporary or made compound." (Part 6.16). However, where a compound is used as a modifier, a hyphen is normally needed.

Authors, please use active voice whenever possible. It is fine to use active pronouns to begin sentences, such as "The California High Speed Rail Authority (Authority) evaluated the corridor for biological resources." If you are writing the introduction to a resource, the text needs to define why the resource is important, the study area, and, if possible, any pertinent regulations.

Use of *corridor* vs. route vs. alignment vs. alternative might pose a challenge because these terms can mean slightly or vastly different things for other program:

- ***Corridor*** refers to the general area between Merced and Fresno, specifically referred to as the Merced to Fresno Corridor. The corridor contains one primary route – UPRR.
- ***Route*** refers to the two general options for the HST in the corridor, one referred to as the BNSF route and other as the UPRR route. *Route* is not capitalized when used this way. Although the routes are identified by the BNSF and UPRR railroads, the route does not necessarily remain adjacent to the railroad. If there is any chance for confusion about which route is being discussed, e.g., when discussing the alternatives developed during the alternatives analysis process, write "BNSF route" or "UPRR route" to clarify. Alternatives A2 and A3 will be carried forward for analysis in the EIR/EIS and follow the UPRR route (A3 follows it only partially).
- ***Alignment*** refers to the refined routes selected to fulfill specific purposes, such as satisfy right-of-way or curvature, or to avoid impacts, such as property acquisitions. It also refers to the path of the trackway.
- ***Alternative*** refers to the entire package for a given alignment, not just the path the HST will follow. The alternative includes all project components, including trackway, bridges, elevation profiles, and stations. This is not to be confused with the term "*preferred alternative*" from the programmatic EIR/EISs, which refers to the routes and general station locations that were selected after the 2005 and 2008 Statewide Programmatic EIR/EIS documents (i.e., BNSF route and UPRR route).

Finally, take care when differentiating ***mitigation* from *avoidance and minimization*.** Use *mitigation* only if not covered by best management practices or design. Avoidance and minimization should be discussed in impacts sections. If unclear, highlight for the senior reviewer.

1.2 A Note on Tracking Changes and Comments

Keeping track of changes will be very important when we are trying to turn high-quality documents around quickly. In Word documents, use the Track Changes feature for all changes. You can make comments either by inserting your comment as highlighted text directly into the text or using the Word Comment tool. If you respond to a comment in an existing "comment balloon," please include the date and your name, because new text in "comment balloons" is not tracked by author.

Do not accept changes. Do not delete comments. We want to be able to track the evolution of the document. The editor will generate a clean document for each new review cycle.

Make sure that you have a user name in Word so that changes and comments will be automatically identified by author (discovered by hovering cursor over the changed text). If you need to add your user name, go to **Tools > Options > User Information in Word 97 or 2003, or go to Track Changes Options in Word 2007**.

A QC tracking form will be used by authors, reviewers, and editors to maintain version control integrity and identify milestones. See Appendix A, Quality Control Cover Sheet and Version Control.

1.3 Using the Document Template

Appendix B describes the document styles for this project, as well as providing guidelines for writing and creating figures and tables. Several teams, such as CH2M Hill, have produced a CD with the Project Instructions that includes templates for its individual section. The Word template includes all the styles needed to write the documents.

1.4 List of Words and Terms

This section presents words and phrases common to this project, as well as style items that might be of interest to authors, such as hyphenation, italicizing, spelling out numbers, etc. For words and phrases not covered in this section, refer to the *Chicago Manual of Style or ask* the lead editor. In addition, Appendix D includes a comprehensive list of terms and acronyms, as well as descriptive illustrations of engineering terms commonly associated with rail projects.

Aboveground. One word.

Abbreviations and Acronyms. Whenever possible, do not use an acronym or abbreviation. That said, there will be a lot of acronyms in this document.

- Once a term or word has been defined as an acronym or abbreviation in a chapter, only the acronym or abbreviation should be used in following occurrences in that chapter (not section). Acronyms will be redefined in each chapter.
- Whenever possible, do not use acronyms. For example, if National Marine Fisheries Service is only going to be mentioned one or three times in a chapter, there is no need to use the acronym. (Exceptions include certain industry standard acronyms such as L_{dn}, which would be used even if used only twice, and if used only once to clearly connect them to similar terms such as $L_{eq.}$)

- If the acronym or abbreviation is not much shorter than the word or term (ft for feet, in for inch), don't use the acronym or abbreviation (acceptable in tables to conserve space).
- In text, don't abbreviate Street, Avenue, Road, Highway, etc. In tables, use St, Ave, Rd, Hwy, etc. Abbreviate state highway names (e.g., SR 41, I-5) in text after first reference. Also use N, S, E, W, NE, SE, NW, SW in addresses and street names. In text, spell out numbered avenues, (e.g., Fifth Avenue, First Avenue S); in tables, use 5th, 1st, etc. Always spell out *right-of-way* (never ROW).
- Do not use acronyms in headings in most cases (exceptions include *EIR/EIS*).
- If you do use an abbreviation in a table, it does not get periods (ft not feet, Ave not Ave., etc).

Absolutes. Don't use absolutes unless necessary (all, every, ensure, complete, full, never, etc.)

Acronyms. See **Abbreviations and Acronyms.**

Affect. Use the verb *affect*, not *impact* (e.g., Construction would affect…).

Alignment. *Alignment* refers to the refined routes selected to fulfill specific purposes, such as satisfy right-of-way or curvature, or to avoid impacts, such as property acquisitions. Note: *alignment* is horizontal and *profile* is vertical.

Alternative. Alternative refers to the entire package for a given alignment, not just the path the HSR will follow. The alternative includes all project components, including trackway, bridges, elevation profiles, and stations. This is not to be confused with the term "*preferred alternative*" from the programmatic EIR/EISs, which refer to the routes and general station locations that were selected after the 2005 and 2008 Statewide Programmatic EIR/EIS documents (i.e., BNSF route and UPRR route). User *under*, not *in*, to describe elements of an alternative. (*Under Alternative A3, there would be …*)

a.m. and p.m. *Not* AM and PM or A.M. and P.M. (Exception is when referring to traffic models, in which case it is AM peak or PM peak.)

Appendices. Spelled with a C. Appendices are enumerated with letters (e.g., Appendix A, Appendix B).

At-grade. Use hyphen for all parts of speech (i.e., noun, adjective).

Attachments. Attachments are enumerated with numbers (e.g., Attachment 1, Attachment 2).

Avoidance. See **Mitigation vs. avoidance and minimization**.

BNSF. BNSF or BNSF Railway is adequate, even on first reference. On second reference, BNSF Railway or the railway is acceptable. (Burlington Northern Santa Fe Railway officially changed its name to BNSF Railway.)

Bulleted lists. Uppercase first letter and use period at end of each item, whether or not it is a complete sentence.

Bus, buses. Use the verb forms: *bus, bused, busing;* do not use *bussed, bussing*.

Bus stop. Always write out as two words.

California High-Speed Train System, California HST System. Uppercase System in this use because it is the full name of the program. But lowercase when not used as part of full name (HST system, the system, etc.).

Capitalization.

- Capitalize corridor names (*Merced to Fresno Corridor*); do not capitalize *corridor* when the specific corridor is not named (e.g., the shortest corridor.) or in plural use (*Fresno to Bakersfield and Bakersfield to Los Angeles corridors)*.
- Capitalize segment names. Same guidelines that apply corridors in the previous item apply to segments when they are identified for individual *alignments*.
- Capitalize *alignment* when discussing a specific alignment (e.g., Alignment A1), but do not capitalize alignment when the specific alignment is not named (e.g., the project alignments).
- Capitalize *alternative* when discussing a specific alternative (e.g., Alternative A1), but do not capitalize alternative when the specific alignment is not named (e.g., the project alternatives).
- Avoid unnecessary capitalization because it impedes reading rather than highlights words. For emphasis use other typographical devices: boldfacing, italics, or underlining.
- Do not capitalize titles of positions unless they are directly connected to the name: "*Governor Schwarzenegger*," but "*the governor"* and "*the governor, Arnold Schwarzenegger, signed …*"
- Programs, projects and plans: Capitalize the full name of programs, projects, or plans adopted formally by the Authority or other entities. Otherwise, avoid capitalizing them. Always lowercase program, project, or plan when the word stands alone or when using only part of the formal name.
- Project Alternative and No Project Alternative. (Don't use "No Action/No Build Alternative." Don't capitalize "Project" when discussing "the project.")

Carpool. Always write as one word.

Central business district. *Downtown* is preferred. If necessary, spell out *central business district* on first reference and do not capitalize; *CBD* is acceptable on second reference.

CH2M HILL. All capital letters. Space between CH2M and HILL.

Cleanup/Clean up. Use one word . When used as a noun or modifier and two words when used as a verb. (Ex: The Authority will clean up the construction debrief after the local jurisdiction approves the cleanup.) Do not hyphenate.

Construct (as a verb). Avoid this term; use *build* instead.

Corridor. For this project, *corridor* refers to the general area between Merced and Fresno, specifically referred to as the Merced to Fresno corridor. Generally, refer to it as the Merced to Fresno Section. However, the corridor contains the two routes (BNSF and UPRR). Capitalized only when used with a specific corridor, but lowercase for plural uses. Do not hyphenate the corridor name when the corridor is described by two locations: *The Merced to Fresno Corridor is a critical link connecting the Bay Area Corridor to the Fresno to Bakersfield and Bakersfield to Los Angeles corridors.* Also acceptable, *The corridor between Merced and Fresno*. See also, **Section**.

Decisionmaking (or variations of decisionmak***). Always one word, not hyphenated and not two words. (Note: Microsoft Word's dictionary will not agree with this.)

Downtown. Lowercase unless used to describe a specific city location with the city name and unless part of a formal name:

- Congestion in the *downtown* area would increase.
- Congestion in *Downtown* Fresno would increase.

- The *Downtown Association of Fresno* has expressed concern about the potential for increased congestion during construction.

Effect, Effects. When referring to a resource effect, always replace with "impacts" except for usage related to historic properties. Use impact *on*, not impacts *to*.

Environmental impact statement. Spell out on first reference and capitalize only when used as part of a proper title: *EIS* (all caps, no periods) is acceptable on second reference. Always spell out *draft*, *final*, or *supplemental* when used with the document: *The project team printed the draft EIS last month*.

Farebox. Write out as one word.

Federal. Use a capital letter for corporate or governmental bodies that include the word as part of their formal names: *Federal Express, the Federal Trade Commission*. Lowercase when used as an adjective: *federal Department of Transportation*. Always lowercase the phrases *federal courts* and *federal government* and *federal regulations*.

Federal Transit Administration. Abbreviate as *FTA* on second reference.

Government. Always lowercase and write out: *the state government*, *the U.S. government*.

Groundwater. One word.

Herndon, community of. Lower case "community." *Two design options that would affect the community of Herndon were also removed from further consideration based on input from the City of Fresno.*

High-occupancy vehicle. Spell out on first reference and use *HOV* on second reference.

High-speed. Hyphenated when a modifier such as high-speed rail or high-speed train.

High-speed rail. Generally, we'll use *high-speed train* (HST). The most likely exception will be *California High-Speed Rail Authority*, which will usually be referred to simply as *the Authority*.

High-speed train. HST on second reference. A train designed to operate safely and reliably at speeds upwards of 200 mph.

HST alternative. Represents the HST system selected at the program level and to be further evaluated at the project level. Project EIRs/EISs will evaluate sections of the HST alternative.

HST corridor alignment. The corridor selected at the program level, also referred to as an alignment in the statewide program EIR/EIS.

Hyphenation. When two or more words are used as a modifier, a hyphen is normally needed. However, do not hyphenate section names, such as the Merced to Fresno Section.

Impact. Never use as a verb. And it's *impacts on*, not *impacts to*. When a verb is called for, use *affect*.

Indepth. One word as compound modifier. Never in-depth. (*For an indepth discussion see Appendix E. Utilities are discussed in depth in Appendix D.*) (Note: Microsoft Word's dictionary will not agree with this.)

Industrywide. One word. *Not* industry-wide or industry wide. (Note: Microsoft Word's dictionary will not agree with this.)

Interchange. Always write out and do not abbreviate as *I/C*.

Italics.

- Use to identify official document names, but not shortened form of the names (*Fresno Downtown Plan*, but the downtown plan).
- Use to highlight important words (underlines also acceptable, but not all caps).
- Use to identify terms (e.g., *Tiering* refers to a multilevel approach…). Do not use quotation marks this way.

Le Grand. Two words.

Long-distance/long distance. As a compound modifier, this should be hyphenated, as in *long-distance* trip. However, when using in other contexts, it should be unhyphenated, as in "Commuters who travel a *long distance* …")

Magnetic levitation. Spell out on first reference; *maglev* is acceptable on second reference.

Metric. See **Numbers.**

Miles per gallon. Use the abbreviation *mpg* (lowercase, no periods) on second reference.

Miles per hour. Use the abbreviation as *mph* (lowercase, no periods) on second reference.

Minimization. See **Mitigation vs. avoidance and minimization**.

Mitigation. See **Mitigation vs. avoidance and minimization**.

Mitigation vs. avoidance and minimization. Use *mitigation* only if not covered by best management practices or design. Avoidance and minimization should be discussed in impacts sections. If unclear, highlight for senior review.

Modal split. Avoid using this term in information intended for a general audience.

Multi. Almost always omit hyphen: multibody, multicar, multiplane, multifamily, multiuse. Use the hyphen only in rare occasions, such as multi-incremental sampling.) (Note: Microsoft Word's dictionary often will not agree with this.)

National Environmental Policy Act of 1969. Spell out and capitalize on first reference. *NEPA* is acceptable in later references.

Neighborhood. Capitalize when used in conjunction with a specific neighborhood. *This option would avoid the Sunnyside Neighborhood.*

Non. Almost always omit hyphen (nonlinear, nonprofit, nonnative).

No Project Alternative. Represents the region's (and state's) transportation system (highway, air, and conventional rail) as it is today and with **no** implementation of programs or projects that are in regional transportation plans and have identified funds for implementation by 2030. Does **not** include the High-Speed Train Project.

No Action Alternative. Represents the region's (and state's) transportation system (highway, air, and conventional rail) as it is today and with implementation of programs or projects that are in regional transportation plans and have identified funds for implementation by 2030 but does **not** include the High-Speed Train Project.

Numbers.

- Units: English unit with metric in parentheses: *25 feet (7.6 meters).*
- Spell out numbers less than 10 unless except with units of measurement and at beginning of sentences. If a number less than 10 appears in the same sentence as a number greater than 10 (thus in numeral form), not including units of measurement, then the number smaller than 10 is *not* spelled out, except if it's the first word of a sentence. (The 3-mile segment would displace 12 properties, and the 0.5-mile segment would displace 4 homes.)
- Use numbers with all units of measure (5 miles, 45 acres, 4 hours, 9 months).

Off peak, off-peak. Hyphenate when used as a modifier, which will be almost every time it is used in this document.

Off-ramp, on-ramp. Always hyphenated.

Offsite, onsite. One word unless used as an adverbial phrase. (Ex: The onsite features would be moved off site). (Hint: If you can insert the word "the" in between the on/off site and it still makes sense, it should be two words.)

Onboard, on board. One word as unit modifier (*onboard* passengers). In other instances, two words (when passengers get *on board*).

Ongoing. One word, unhyphenated.

Onsite, offsite. See **Offsite, onsite.**

Online. One word in all cases for the computer connection term.

Owens Creek. Unhyphenated Owens.

Parkland. One word

Passholders. One word.

Percent. Do not write out. Use the symbol % (e.g., 53%). Use *percentage* without numeral (e.g., percentage of land affected is…)

Plans, projects, programs. Capitalize the full name of programs, projects, or plans adopted formally by the Authority; otherwise, avoid capitalizing them. Always lowercase program, project, or plan when the word stands alone or when using only part of the formal name: "The project is under way." Avoid interchanging the words *program*, *project*, or *plan* within a text.

p.m. *Not* PM or P.M. (Exception is when referring to traffic models, in which case it is PM peak.)

Post-accident. *Not* post accident.

Power line. Two words.

Power plant. Two words.

Profile. Refers to whether the alignment is elevated, at-grade, or in a retained cut. Alignment is horizontal and profile is vertical.

Project. A component of the HST program or system. There are many projects to be built, but only one program to implement the HST system. For many project environmental documents, this will mean the section of the HST system being evaluated and permitted for construction. Later in the implementation

process there may be other components of the system that are treated as distinct projects, such as maintenance facilities.

Project area. Don't use this term. Replace with *study area*, *project vicinity*, *project footprint*, or another term, as appropriate.

Project footprint. Refers to the area impacted by project construction.

Project. The site-specific level leading to permits for construction. When referring to the EIR/EIS it is never "project-level" (it is Project EIR/EIS); however, the term can still be used (e.g., "at the project level, the Authority will consider …"). (See **Program-level.**)

Project-wide. Hyphenated. (But *systemwide*.)

Program-level. The program or planning level. This term is hyphenated where a unit modifier and not when used alone (e.g., at the program level). (See **Project.**)

PTC-equipped. Hyphenated. Not PTC equipped. (Positive train control.)

References. Move year after author; month and year at end. See Appendix B for more about references.

Right-of-way. Always hyphenate, <u>never</u> abbreviate to ROW. The plural is *rights-of-way*.

Risk based/risk-based. Hyphenate when used as a unit modifier; otherwise, two words.

Round trip (n.), round-trip (adj.). Use two words for the noun use. Hyphenate for the adjective use.

Route. (Also see **Alignment vs. route vs. alternative vs. corridor** entry in General Guidelines, below.)

- Route refers to the two general options for HSR in the corridor, one referred to as the BNSF route and other as the UPRR route. *Route* is not capitalized when used this way. Although the routes are identified by the BNSF and UPRR railroads, the route does not necessarily remain adjacent to the railroad. If there is any chance for confusion about which route is being discussed, write "BNSF route" or "UPRR route" to clarify.
- When referring to bus routes, use *route* instead of *alignments*.

Route numbers. Do not abbreviate *route*. Capitalize route and follow with the number: *Route 5, Route 251*. Lowercase when the reference is to two or more routes: *routes 7 and 14*. Avoid putting an *E* after route numbers to show express routes. Use express Route 251 or Route 251 express instead of Route 251E.

Runoff. One word.

Scoping notice. Write lowercase.

Sections of the EIR/EIS and Appendices. When referring to a section within the document, include the section number (capitalized) and title, and don't restate document name (e.g., *See Section 3.5, Energy*. [<u>Not</u> *Section 3.5 in this EIR/EIS*]).

Section of the HST system. A corridor or set of corridors between logical termini addressed as a single project component of the HST System in a project EIR/EIS. Capitalize when used with a specific section, but lowercase for plural uses. Do not hyphenate the section names. For example, *The Merced to Fresno Corridor is a critical link connecting the Bay Area to the Fresno to Bakersfield and Bakersfield to Los Angeles sections.* Also acceptable: *The section between Merced and Fresno*.

Segment. Segment has a particular and problematic meaning in NEPA case law. Segment should be used only to refer to subcomponents of HST sections. See **Section**.

Shall. Avoid use of shall (see discussion for **will**)

Significant. Do not use the word *significant* unless referring to a specific adverse environmental impact that invokes CEQA procedures. Any time you are describing anything that is in any way related to the built or natural environment (which will be almost everything that appears in this EIS and supporting documents), use a word such as substantial, important, noteworthy, or considerable, or refer to specific numbers and let the reader make the value judgment as to its importance. Do not, however, substitute superlative words such as "very." It is important not to use words that imply value judgments in most cases.

Site-specific. Hyphenated as a unit modifier such as *site-specific analysis*.

SOV. Avoid using this abbreviation. Single-occupant vehicle instead.

Statewide Program EIR/EIS. Initial capitalization. Acceptable after first reference to *Final Program EIR/EIS for the Proposed California High-Speed Train (HST) System*.

Station. Don't say *station location* – just *station*.

Stormwater. One word.

Story. Use numerals for number of stories in a building (4 stories, 7 stories).

Study area. The area defined for study of a particular resource such as archeology, wetlands, or noise receptors. The study area should be defined for each discipline.

Study corridor. A linear geographic belt or band connecting different parts of the study region that follows the corridor alignment selected for the HST system at the program level for evaluation at the project level.

Study region. A geographic region that encompasses one or more selected corridors of the HST system such as the Bay Area to Central Valley, the Central Valley, Southern Mountain Crossing, and Los Angeles Basin.

System. See **California High-Speed Train System** for capitalization guidelines.

Systemwide. One word, *not* system-wide or system wide. (However, *project-wide*.) (Note: Microsoft Word's dictionary will not agree with this.)

Table notes. Use letters, not numbers.

TTY. This abbreviation is acceptable on first reference when used with a phone number.

Transit center. Capitalize the full name of transit centers: *the Merced Transit Center*. Lowercase transit center when the term stands alone: *The transit center is near the BNSF rail line*.

Train operator. On first reference, use *train operator* for people who drive trains. To avoid confusion with other types of operators, include the word *train* on first reference. Always lower case.

Transportation demand management. Spell out on first reference and use *TDM* on second reference.

Trench. Replace with retained cut when referring to the alignment profile.

Turnouts. One word.

University of California. Spell out and capitalize on first reference, separating the specific university location with a comma (*University of California, Merced*) and separate the location (e.g., Merced) from following text with another comma. Use *UC* (all caps, no periods) with a space separating from specific university location (*UC Merced*) or the university (lowercase) on second reference.

Unticketed. One word, not hyphenated.

UPRR. UPRR Railway is adequate, even on first reference. On second reference, UPRR Railway or the railway is acceptable.

Very. Don't use except when part of specifically defined term (perhaps *very low risk* when referring to impacts on certain biological resources).

Via. Use to mean by way of, not by means of. Use *via* (or simpler *through*) to show the direction of a journey: *The alignment runs from Fresno to Le Grand via the community of Planada.* Don't use *via* to show the means by which someone makes a journey: *He made the trip via bus*. Instead write: *He made the trip by bus*.

Web site/web page. Lower case, two words.

Would. Use in impact discussion (e.g., The project would reduce congestion…) because the project is hypothetical, and *would* imply a necessary degree of uncertainty about future decisions.

Will. Use in mitigation measures (e.g., The Authority will construct a noise wall…). Do not use *shall*.

Within. Do not use in place of *in*. Use only to restrict. (Correct: Construction roads will be built within the right-of-way. – because the construction will take place in only a portion of the right of way and is not meant to take up all of the area.) (Incorrect: Wetland surveys will be conducted within the project vicinity. – because the survey represents the entire area.)

Workforce. One word.

<u>For other terms, see Appendix D, Glossary.</u>

If you have any questions about style or format not answered by this guidance, contact Bryan Porter with the Authority's Program Management Team (PMT) at (916) 384-9522 or porter@pbworld.com.

APPENDICES

APPENDIX A

Quality Control Cover Sheet and Version Control

Table of Contents – Appendix A

1.0 Quality Control Cover Sheet and Version Control A-1
1.1 Quality Control Tracking Sheet A-1
1.2 Version Control A-1
1.3 High-Speed Rail File Naming Convention A-1

Table

1 Environmental Clearance Documents A-4

1.0 Appendix A: Quality Control Cover Sheet and Version Control

1.1 Quality Control Tracking Sheet

An internal quality assurance/quality control tracking sheet (example attached) will appear as the first page of each separate document that is developed for this EIR/EIS, including chapters, sections, front matter, appendices, and reports. The QA/QC tracking sheet (attached) is a tool to ensure that each document receives at least the mandatory senior review, editing, and client review steps, and to track further review that might be necessary. The QA/QC tracking sheet will remain with each document until it is final, as determined by the project manager.

1.2 Version Control

Each separate document that is developed for this EIR/EIS, including chapters, sections, front matter, appendices, and discipline reports will be reviewed through the use of ProjectSolve. Each file will be posted into the appropriate "Draft" folder in ProjectSolve with "Track Versions" enabled. This will enable a collaborative review process and each series of edits will be tracked automatically by ProjectSolve. As each reviewer posts his or her, comments comment to the version note indicating the purpose of the review and anything else worth noting. The file name could, for example, be preceded with the two-letter section identifier and only contain the status of the document and its title. For example:

MF Draft Alternatives Analysis.doc

MF designates Merced to Fresno Section. Do not use underscores in file names. Note that to avoid confusion with the automatic ProjectSolve version tracking feature, dates and revision or version numbers **must not** be included in the file name. **This applies only to documents that are stored on ProjectSolve.**

Before documents are stored on ProjectSolve, they can and should include date and reviewer information. See file naming conventions for environmental documents below.

1.3 High-Speed Rail File Naming Convention

In preparing your work, here are guidelines for file naming and format that will make the process easier for all of us.

General:

- Do not use underscores, as they get lost when hyper-links are used.
- Keep the file name as short as possible
- See Table 1 for HST section code prefixes (e.g., MF for Merced to Fresno Section and MS for Merced to Sacramento Section

Files Name Conventions have been prepared for the following file types:

A. Annual Work Scope, Budget, Schedule & Deliverables
B. Monthly schedule updates
C. Letters /Memorandum
D. Environmental Documents undergoing review and editing via ProjectSolve
E. Engineering documents undergoing review and editing via ProjectSolve.

A. Annual Work Scope, Budget, Schedule & Deliverables

The file name:
HNTB San Diego to Los Angeles Scope FY 2009-2010, June 15, 2009, version 1.doc
Could more easily be displayed as follows:
Firm Section Code File Name Date version xx.ext
i.e. "HNTB LD Scope FY 2009-10 20090615 v1.doc"

B. Monthly Schedule Updates
The file name:
San Diego to Los Angeles Schedule June Update FY 2009-2010 version 1.doc
Could more easily be displayed as follows:
Section Code File Name Update Month Version xx.ext
i.e. "LD Schedule Update 2009 June v1.xer"

Should there be a revision to the Baseline Schedule
i.e. "LD Schedule Baseline 2009 June v2.xer"

C. Letters /Memorandum
The file name:
From-To Subject-Date.doc
Anthony Daniels – Carrie Pourvahidi Budgets and Work Scope Concerns, June 15, 2009.doc
Could more easily be displayed as follows:
From initials-To Initials Subject Date.doc
i.e. "AD-CP Budgets and Work Scope Concerns 061509.doc"

D. Environmental Documents
Environmental documents file names indicate the resource, type of document (EIR/EIS or tech report, point the process (drafter, senior review, etc), and date/author.

1st Draft Version:
MF_ResourceName_EIS (orTR for tech reports)_Draft_(Date_initials).doc

Senior Review Version:
MF_ ResourceName_EIS (orTR for tech reports)_SR_(Date_initials).doc

Edited Version:
M_ResourceName_EIS (orTR for tech reports)_Edit_(Date_initials).doc

Final Version to be uploaded to Project Solve:
MF_ResourceName_EIS (orTR for tech reports)_Final_(Date_initials).doc

Version Control in Project Solve
Each separate document that is developed for this EIR/EIS, including chapters, sections, front matter, appendices, and discipline reports will be reviewed through the use of ProjectSolve. Each file will be posted (only by authorized team members) into the appropriate "Draft" folder in ProjectSolve with "Track Versions" enabled. This will enable a collaborative review process and each series of edits will be tracked automatically by ProjectSolve. As each reviewer posts his or her, comments comment to the version note indicating the purpose of the review and anything else worth noting. The file name should be preceded with the two-letter section identifier and only contain the status of the document and its title. For example:

MF Transportation EIS.doc

MF designates Merced to Fresno Section. Do not use underscores in file names. Note that to avoid confusion with the automatic ProjectSolve version tracking feature, **dates and revision or version numbers must not be included in the file name.** This applies only to documents that are stored on ProjectSolve.

San Diego to Los Angeles Draft Alternatives Analysis.doc
Could more easily be displayed as follows:
Section Code File Name.ext
i.e. "LD Draft Alternatives Analysis.doc"

Because the file will be reviewed, edited and revised within the ProjectSolve site, the version feature within ProjectSolve will be used.

E. Engineering documents undergoing review shall comply with the requirements in:
TM 0.7 Design Submittal and Review Protocol
In-progress and Draft 15% Design Submittals

1.3.1 Document Format

Please use the following applications for the following:

Scope	Microsoft Word
List of Deliverables	Microsoft Excel or MS Word
Budget	Microsoft Excel
Schedule	Primavera P6 (preferred) or Microsoft Project 2007

Header (left side):
CALIFORNIA HIGH-SPEED TRAIN PROJECT EIR/EIS
MERCED TO FRESNO SECTION

Header (right side):
DOCUMENT TITLE
SECOND LINE OF DOCUMENT TITLE

Footer (left side):
CHSR and USDOT/FRA logos (see footer of this page)

Footer (right side):
Page X (or X of X)

(Note: Page numbering style may vary)

Key Points: In the schedule, make major milestone deliverables stand out as a single events, e.g., 15% design, Draft EIR/EIS, 30% design, Final EIR/EIS & NOD/ROD.

1.3.2 Posting to ProjectSolve2

Post the original source file along with the PDF copy in its respective folder.

Post each file as a separate file. Packing all files into a PDF and posting as one file makes it difficult to manage when one of the original files is revised.

When sending an alert, please add clarity by adding text to the subject line and add a note to alert, notifying the recipient the purpose and content of the link.

1.3.3 E-mailing files

Send the original source file along with the PDF copy.

Send each file as a separate file. Packing all files into a PDF and sending as one file makes it difficult to manage when one of those files is revised.

1.3.4 FTP site for large files

For large files that do not e-mail easily, use a File Transfer Protocol (FTP) site.

For example, for CH2M HILL staff, the **FTP folder** path is: \\maryjane\ftp\CAHSR.

Subconsultants or anyone without access to the CH2M HILL server network who needs to access the FTP site can reach it over the internet. Type the following in your web browser: ftp://ftp.ch2m.com/CAHSR

User Name: highspeed
Password: sacfresno

Once there, you can view the page through Windows Explorer by going to the "Page" dropdown menu and selecting "Open FTP Site in Windows Explorer." You will need to reenter the username and password.

Table 1
Environmental Clearance Documents

Regional Consultant (Environmental Lead)	Alignment Sections	Section Code
HNTB	San Francisco to San Jose	**FJ**
Parsons (ICF Jones & Stokes)	San Jose to Merced	**JM**
AECOM (CH2M HILL)	Merced to Fresno	**MF**
AECOM (CH2M HILL)	Merced to Sacramento	**MS**
URS (URS)	Fresno to Bakersfield	**FB**
URS (URS)	Bakersfield to Palmdale	**BP**
HMM	Palmdale to Los Angeles	**PL**
STV (CH2M HILL)	Los Angeles to Anaheim	**LO**
HNTB (CH2M HILL)	Los Angeles to San Diego	**LD**
AECOM	Altamont Pass	**AJ**
PB	Program Management Team	**PM**

CH2MHILL

Internal QA/QC Tracking California High-Speed Rail

Document: Merced to Fresno Section: <document title>

Author: <name of author(s)>

Senior Reviewer: <name of reviewer(s)>

Date	Process	Completed – (insert Initials/Firm name)	Return to:
	Author		Senior Reviewer
	Senior Review		Author
	Author finalize		Editor
	Edit 1		Author/PM
	Author review		Editor
	Edit 2		Author/PM
	Finalize for client		PM
	Submitted to client/AECOM		Returned to PM:
	Author response to client/AECOM		Senior reviewer
	Senior Review		Author
	Author finalizes		Editor
	Edit 2		PM resubmitted to CHSRA (via AECOM) on: (date)
	Author response to client/AECOM		Senior reviewer verifies authors response to comments
	Senior Review		Author
	Author finalizes		Editor
	Edit 3		PM 2nd submittal to CHSRA (VIA AECOM) on: (date)

This form will remain with the document until document is determined to be final. Additional rows will be added as necessary to record additional reviews.

Appendix B

Document Template and Example

Table of Contents – Appendix B

1.0 Document Style B-1
1.1 Second-Level Heads (Heading 2) B-1
1.2 References B-2
1.3 Tables and Figures B-2
1.4 Persons and Agencies Consulted B-4
1.5 List of Preparers B-4
1.6 Appendices B-6

Table

1.3-1 Example Table

Figures

1.2-1 Reference Guidelines

1.3-1 Example Figure

1.0 Document Style

This section shows the format, styles for text, tables, figures, and references that should be used for this entire document. Appendices should use the same style as the main documents.

All documents will be double-sided, with main sections beginning on right-hand (odd-numbered) pages.

This section heading is a first-level head, which uses title case, always begin at top of right-hand (odd page numbered) page.

Here is the way bullets should be set up, with no additional line space between them if they are short, and double-spaced if they are longer items (the style template provides the two options).

- Bullets
- Bullets
- Bullets

For the main EIS/EIR, pages should have separate numbering for each section (1-1, 1-2, . . . 2-1, 2-2, etc.). For appendices and other support documents, pages can be numbered continuously throughout the document; let the number of sections be your guide as to which page-numbering choice to make.

Use italics and underlined text sparingly. Italics should be used only in specific situations (e.g., scientific nomenclature, certain times for emphasis, certain times for quotes). Same goes for underlining underlined and/or italicized text is used for level 5 heading text and level 6 body text.

The font for all work on the California High-Speed Train Program will be **Tahoma, using 10 point font.** Text will be left justified. Use only a single space after periods. In addition, the text should be formatted as follows:

- Page size and orientation – 8.5 by 11 inches, portrait
- Margins, 1.5 inch for the left, 1.0 inch on the right, with header and footer at 0.5 inch
- Headers and footers will be formatted similar to this page with the Authority's logo in the bottom left corner followed by the FRA's logo
- To facilitate the review of draft documents, use the Line Numbering feature in MS Word.

Sections will be generally numbered and formatted as shown in the examples below. The text in parentheses in the section heads below indicate what they are called in the style palette.

1.1 Second-Level Heads (Heading 2)

Second-level heads title case, no indentation.

1.1.1 Third-Level Heads (Heading 3)

Third-level heads title case, no indentation.

A. Fourth-Level Heads (Heading 4)

Fourth-level subsection head title case, no indentation.

Fifth-Level Heads (Heading 5)

Fifth-level heads title case, underline, no indentation.

Sixth-Level Heads (Heading 6): Sixth-level heads title case, italic, underlined, left justified; title followed by colon and one space (colon and space not underlined), no indentation.

1.2 References

All sources must be referenced, including text, data, graphics, base maps, as shown in Figure 1.2-1. In-text citations are required, with no comma between name and year (e.g., Smith 2007; Jones and White 2001b; City of Fresno 2005). Do not use footnotes for citations. Full citations, as shown in Figure 1.2-1 will be included in the References Cited sections. For tables, references will be listed as sources at the bottom of the table. For graphics, references, including base mapping, will be listed as sources in the legend. In addition, personal communication will be cited in text (not in the bibliographical section) as follows: Name, Title, Org, City, State. Date of communication. Personal Communication. All sources need to be stored in the administrative record.

1.3 Tables and Figures

Tables should be simple and should follow the example shown below (numbering should reflect Chapter "." Section "-" sequence within section). For table content there is some flexibility with font sizes. You may go smaller if it is needed, but in no case should font size be less than 8 point. As much as possible, tables should be displayed in portrait mode. If necessary, use landscape mode. See Table 1.3-1.

Table 1.3-1 (exhibit number)
Table Title (exhibit title)

Heading	Tahoma, 10 pt., bold	Heading
Table Body Tahoma (9 pt.)[a]		
Table body		
Table subheads, 5% shading selection from Format > Borders and Shading		
[a] Table Notes: insert notes here --- Tahoma, 8 pt. Notes in tables should use letters, when needed. Source: insert source here --- Tahoma, 8 pt.		

See Figure 1.3-1 for a figure example. Figure numbering follows the same conventions as the tables do, but the figure number and title is located below the figure.

Report figures should include the following:

- Full-page maps and other figures should be portrait style whenever possible.
- Figure total height, including text such as scale and legend, should be at most 9 inches tall due to headers and footers taking up space on every page of the document. Ideally, there will be two inches of space below the graphic for supporting text such as sources, revision date, scale, legend, and figure name/number.

Basic format:

THIS MAY BE A PERSON OR AN ORGANIZATION

Author. Year of publication. *Title.* Publication city: Publisher. Date of publication.

Examples:

Bronowski, Jacob. 1973. *The Ascent of Man.* Boston: Little, Brown. June 1973.

TWO AUTHORS

March, James G. and Herbert A. Simon. *Organizations.* New York: Wiley. August 1958.

Remy, Michael H., et al. 1990. *Guide to the California Environmental Quality Act (CEQA).* 4th ed. Port Arena, CA: Solano Press Books. June 1990.

MORE THAN TWO AUTHORS

NOTE: IN BIBLIOGRAPHY, SECOND LINE INDENTED

The Western Garden Book. 1979. Menlo Park, California: Lane Publishing. June 1979.

NO AUTHOR OR EDITOR

NOTE: IN BIBLIOGRAPHY, DO NOT "COUNT" ARTICLES (THE, A, AN) WHEN ALPHABETIZING

Tuchman, Barbara W. 1980. "The Decline of Quality." *New York Times Magazine.* November 2, 1980: pp. 38-57.

ARTICLE

Pearl, Arthur. 2000. U.S. Fish and Wildlife Service. Letter to Donna McCormick, Parsons Brinckerhoff. February 20, 2000. Regarding the listing of California gnatcatcher as threatened.

LETTER, FAX, OR E-MAIL

INTERVIEW OR TELEPHONE INTERVIEW

Pearl, Arthur, U.S. Fish and Wildlife Service. Telephone interview by Donna McCormick, Parsons Brinckerhoff. February 20, 2000. Regarding the impacts to Stephen's kangaroo rat.

Environmental Protection Agency, Region 9. 2000. *EPA Proposes To Reclassify Central Valley Air from Serious to Severe.* News release from web site, http://yosemite.epa.gov/r9. June 12, 2000. Accessed December 13, 2000.

INTERNET SOURCE – NOTE: BECAUSE INTERNET SOURCES ARE SUBJECT TO FREQUENT CHANGES, DATA SHOULD BE PRINTED AND RETAINED IN TEAM'S FILES

DataQuick. 1999. *Monterey County Tax Assessor Data.* Database. Accessed on-line through subscription service. Search date: June 24, 1999.

DATABASE SOURCE – NOTE: DATA SHOULD BE PRINTED AND RETAINED IN TEAM'S FILES

Figure 1.2-1
Reference Guidelines

- The image width is at most 7 inches. Page placement for binding purposes is not relevant because the figures will be placed in Word.
- A 0.75-point rule should surround the map/image.
- The figure number and figure name should be right-justified and located in the lower right corner. However, in environmental documents, the figure number and name will be built and placed within Word and so should not be included by the graphic designer or GIS staff. Graphic designers and GIS staff have the file naming conventions to track the figures.
- The last-revised date of the graphic right-justified below the view frame.
- If using slug line showing file name and location, place vertically on left edge (will be removed for final publications).
- The source left-justified under the view frame. This may be more than one line of text. Begin wrap half-way along bottom of figure.
- A legend centered below the figure. Do not include the word "legend."
- The scale bar located directly below the view frame and left-justified, with one scale in English units (feet, miles, etc.) and one in metric (meters, kilometers, etc.). Due to space constraints often caused by extensive legend requirement, put mile and kilometers below their respective scales. If graphic is not to scale, state "Not to Scale" in the legend.
- A north arrow located above the scales, due to space constraints that will be caused by extensive legends. The north arrow should include the letter "N."
- No logos (Authority, FRA, or company) on the graphics.
- Tahoma font for all text except corridor names, which may be in a different, **but non-serif, font.**
- Text must be readable.

1.4 Persons and Agencies Consulted

In addition to references, the document needs to include a separate list of all people who were contacted for preparation of the document. For example:

The following is a list of people who were contacted during the preparation of this report.

Doe, John. Park Superintendent, Parks and Recreation. Telephone interview by Jane Doe, Parsons Brinckerhoff. June 21, 2000.

1.5 List of Preparers

The PM and Regional Teams will need to document the preparers of reports. The required information includes:

- Names of all preparers, including personnel that conducted field work, performed analysis, documented results, or provided quality control.
- Titles and any registrations (etc.) for all preparers.

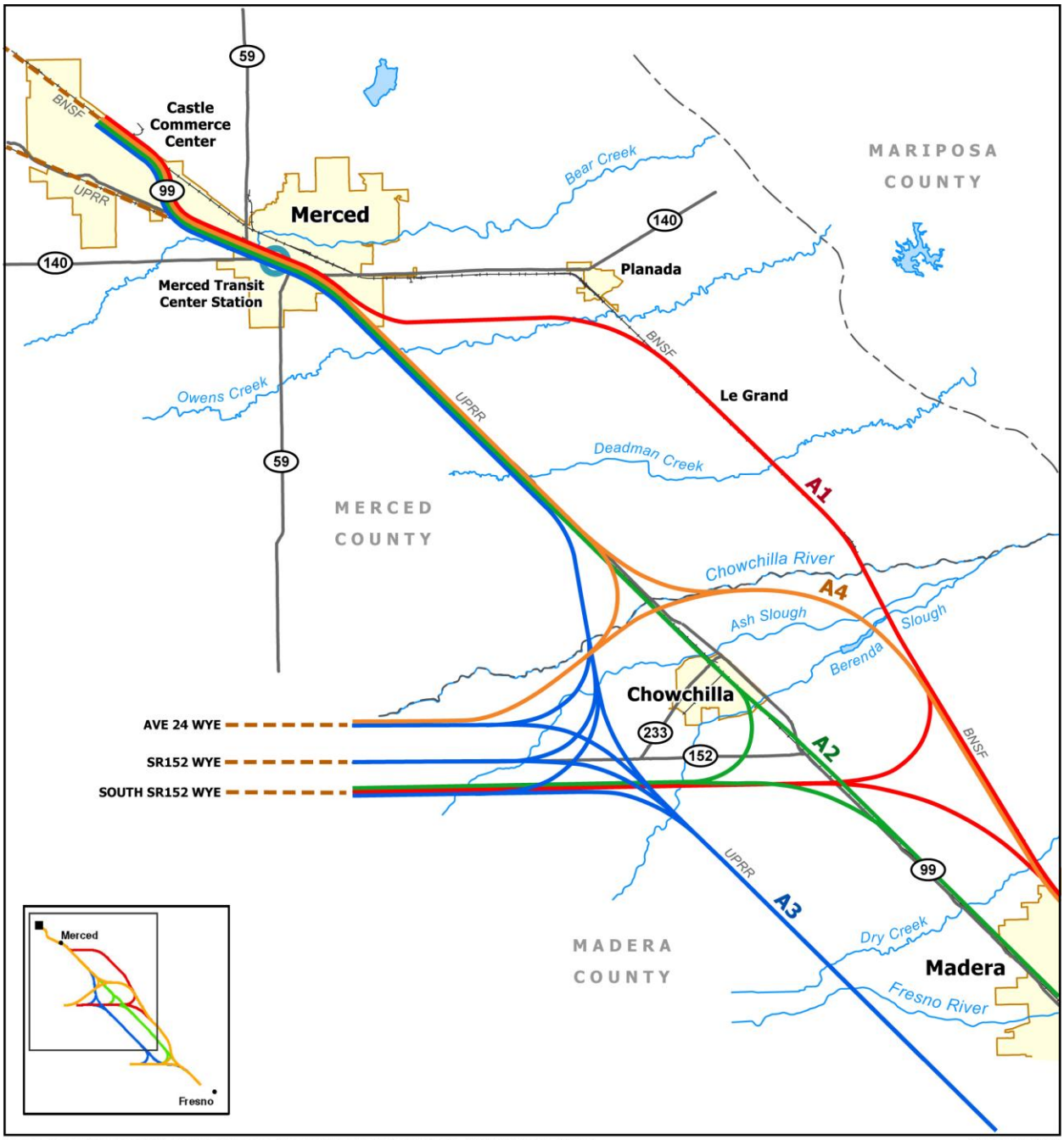

Source: Merced County (2008) GIS Data (Streams, Streets, Water Bodies). CH2M HILL (2008) GIS Data (Parks).
Horizontal datum for all layers is NAD83(91); vertical datum for layers is NAVD88.

October 15, 2009

N

0 500 1000
Feet

A1 - BNSF
A2 - UPRR/SR99
A3 - Western Madera
A4 - UPRR/SR99 and BNSF
Other HST Project Section

Potential Station
Maintenance Facility
Area One
Area Two
Area Three
County Boundary
City Limits

Figure 1.3-1

Example Merced to Fresno Section Graphic (without current base map)

- Education for all preparers, including degree and school (define any acronyms that are not the standard B.A., M.A., B.S., M.S., or Ph.D.) (do not include course work or certificate programs that are not directly related to the work conducted).
- Years of experience and a short explanation of that experience.
- Role in the preparation of the analysis/report.

An example of the format for the list of preparers follows (even though it is a table, it should not be put in the standard table format):

Donna McCormick, AICP Supervising Environmental Planner	B.L.A., Landscape Architecture, California State Polytechnic University. 12 years of experience in planning and preparing environmental documents. • Quality Control Manager • Environmental Methodology Development Guidelines
David Freytag, AICP Supervising Environmental Planner	M.U.P., Urban and Regional Planning, Texas A&M University. B.S., Environmental Design, Texas A&M University. 11 years of experience in preparing environmental documents. • Deputy Program Manager • Quality Control

1.6 Appendices

Appendices should be written using the same styles as the main document. The template styles include settings for the appendix cover sheet. Like all individual documents, appendices also need to include the quality control cover sheet.

Appendix C
Document Cover Sheet Guidelines

CALIFORNIA HIGH-SPEED TRAIN

DRAFT

Merced to Fresno Section
Title of Document on These Lines

January 2010

California High-Speed Rail Authority

FLY CALIFORNIA
Without ever leaving the ground.

U.S. Department of Transportation
Federal Railroad Administration

CALIFORNIA HIGH-SPEED TRAIN PROJECT EIR/EIS

DRAFT
<DOCUMENT TYPE>

Merced to Fresno Section

<Document Title>
<Document title Line 2>

Prepared by:

<Regional Team Prime Consultant>

Company A
Company A
Company A
Company A
Company A
Company A

October 14, 2009

Appendix D
Glossary, Design Terms, and Acronyms

Glossary

A

Abatement: Reduction; often used to describe mitigation of noise.

A horizon: the A horizon is soil zone immediately below surface, from which soluble material and fine-grained particles have been moved downward by water seeping into soil. Varying amounts of organic matter give the A horizon a dark color.

Accessibility: The ease with which a site or facility may be reached by passengers and others necessary to the facility's intended function. Also, the extent to which a facility is usable by persons with disabilities, including wheelchair users.

Action Alternative: An alternative that proposes some action by one or both of the co-lead agencies, as contrasted to the No Action (No Project) Alternative.

Actual Use: The amount of use that actually occurs.

Adverse: Negative or detrimental.

Affected Environment: The physical, biological, social, and economic setting potentially affected by one or more of the alternatives being considered.

Air Pollution: A general term that refers to one or more chemical substances that degrade the quality of the atmosphere.

Alignment: The horizontal and vertical route of a transportation corridor or path.

Alignment Alternatives: The general location for HST tracks, structures and systems for the HST system between logical points within study corridors.

Alluvium: Sedimentary materials deposited by running water.

Alquist-Priolo Earthquake Fault Zoning Act: California law passed in 1972 to prevent construction of buildings used for human occupancy on surface traces of active faults.

Americans with Disabilities Act (ADA): Federal regulation establishing legal requirements for accessibility.

Amplitude: The magnitude of a periodic wave; also describes the strength or intensity of a signal that travels in wave form, such as a radio signal.

Approximate Location: Is defined in Government Code, Section 4216 as the "approximate location of subsurface installations" being a strip of land not greater than 600 mm (24 in) on either side of the exterior surface of the subsurface installation. "Approximate Location" does not define depth.

Aquifer: Subsurface geologic unit (rock or sediment) that contains and transmits groundwater.

Arc, Arcing: Electrical discharge is said to arc when it jumps across the space between two contacts.

At-Grade: At ground surface level; used to describe roadways, river crossings, and track profiles. Always hyphenated

Attainment: An air basin is considered to be in *attainment* for a particular pollutant if it meets the federal or state standards set for that pollutant. *See also* **Maintenance, Nonattainment**.

Authority: California High-Speed Rail Authority

A-Weighted Sound Level: A measure of sound intensity that is weighted to approximate the response of the human ear, so it describes the way sound will affect people in the vicinity of a noise source.

B

Ballasted Track: Rail lines installed over a specific type of crushed rock that is graded in such a manner that can support heavy loads of the rolling stock.

Ballast-less Track: Rail lines installed over concrete slabs for support.

Barrier: A device intended to contain or redirect an errant vehicle by providing a physical limitation through which a vehicle would not typically pass.

Barrier Offset Distance: The lateral distance from the centerline of the track to the face of the barrier, trackside, or other roadside feature.

Baseline: Foundation or basis to use for comparison purposes.

Bas-Relief: Sculptural element characterized by varied surface planes in low relief.

Beneficial Visual Impact: Impact resulting if a project alternative eliminates a dominant feature that currently detracts from scenic qualities or blocks vistas in the landscape.

BTU: British Thermal Unit, equal to the amount of heat required to raise 1 pound of water 1 degree Fahrenheit at 1 atmosphere of pressure.

Buttressing: An action or structure that provides support or stability.

C

California Environmental Quality Act (CEQA): "Legislation enacted in 1970 to protect the quality of the environment for the people of California by requiring public agencies and decision-makers to document and consider the environmental consequences of their actions. CEQA is the state equivalent of the National Environmental Policy Act (NEPA)."

Capital Cost: The total cost of acquiring an asset or constructing a project.

Capitol Corridor: An existing intercity rail alignment approximating the I-80 corridor; carries freight traffic, long distance Amtrak service, and intrastate "Capitol" service.

Carbon Dioxide (CO_2): A colorless, odorless gas that occurs naturally in the earth's atmosphere; significant quantities are also emitted into the air by fossil fuel combustion.

Carbon Monoxide (CO): A colorless, odorless gas that is generated in the urban environment primarily by the incomplete combustion of fossil fuels in motor vehicles.

Catenary Wire: A suspended (overhead) wire system that supplies power from a central power source to an electric vehicle such as a train.

CCS 83: California Coordinate System of 1983 – The system of plane coordinates which has been established by the National Geodetic Survey for defining or stating the positions or locations of points on the surface of the earth within the State of California and which is based on the North American Datum of 1983.

CEQA: *See* **California Environmental Quality Act**.

Check Rail: The guiding rail located between the two running rails, which functions to maintain a derailed wheel in the track alignment. Check rails are installed at 36 cm from the rail and can be placed inside one or both of the running rails.

Class I Trail: A trail within a separate right-of-way designated for exclusive use by bicycles and pedestrians, with cross traffic by motorists minimized.

Class II Trail: A trail within a restricted right-of-way designated for semiexclusive use by bicycles, with traffic by motor vehicles or pedestrians at crossings.

Class III Trail: A trail located within a right-of-way designated by signs or permanent markings and shared with pedestrians and motorists.

CNEL: Community Noise Equivalent Level. A 24-hour L_{eq} that has been adjusted to add a "penalty" of 5 dBA for evening noise (between 7:00 p.m. and 10:00 p.m.) and 10 dBA for nighttime noise (between 10:00 p.m. and 7:00 a.m.).

Cofferdam: Watertight enclosure from which water is pumped to expose the bottom of a body of water and permit construction.

Community Cohesion: The degree to which residents have a sense of belonging to their neighborhood, a level of commitment to the community, or a strong attachment to neighbors, groups, and institutions, usually as a result of continued association over time.

Community Noise Equivalent Level: A 24-hour L_{eq} that has been adjusted to add a "penalty" of 5 dBA for evening noise (between 7:00 p.m. and 10:00 p.m.) and 10 dBA for nighttime noise (between 10:00 p.m. and 7:00 a.m.).

Concourse: Area for accommodating patrons at a high-speed rail station.

Congestion Management Plan: A planning document that addresses strategies for reducing traffic congestion.

Connectivity: Describes the degree of "connectedness" of a transportation system such as a transit network, and the ease with which passengers can move from one point to another within the network, or points outside the network.

Conservation Easement: An easement created by transferring development rights over a property from a farmer to another entity such as the local jurisdiction or an agricultural protection organization; the land remains in private ownership and may be farmed, but may not be developed with urban uses. *See also* **Easement**.

Containment Curb: A low concrete wall along the track that is designed to guide the train wheels back onto its rail if they leave the line.

Contours: A variable curve that connects points with the same elevation value used to depict surface elevations on a contour map.

Construction: Any activity that directly alters the environment, excluding surveying or mapping.

Contra-flow: Refers to movement against the general direction of flow.

Cooperating agency: Under NEPA, any agency other than the lead agency that has legal jurisdiction over, or technical expertise regarding, environmental impacts associated with a proposed action and has agreed to participate.

Corridor: A geographic belt or band that follows the general route of a transportation facility (highway, railroad, etc).

Criteria Pollutants: Refers to pollutants for which federal and state air quality standards have been established: carbon monoxide (CO), sulfur oxides (SO_x), nitrogen oxides (NO_x), ozone (O_3), particulate matter with a diameter of 10 microns or less (PM10), particulate matter with a diameter of 2.5 microns or less (PM2.5), and lead (Pb).

Cultural Resources: Resources related to the tangible and intangible aspects of cultural systems, living and dead, that are valued by a given culture or contain information about the culture. They include, but are not limited to, sites, structures, buildings, districts, and objects associated with or representative of people, cultures, and human activities and events.

Cumulative Impact: (1) As defined by CEQA, the result of two or more individual impacts which, when considered together, are considerable or which compound or increase other environmental impacts. (2) As defined by NEPA, and impact on the environment that results from the incremental impact of the action when added to other past, present, and reasonably foreseeable future actions.

Cut and Cover: Construction technique in which a trench is excavated, infrastructure is installed, and the trench is closed.

Cut and Fill: Construction technique involving excavation or grading followed by placement and compaction of fill material.

Cut Slope: A slope that is shaped by excavation or grading. *See also* **Fill slope**.

D

Datum: A reference from which measurements are made for establishing horizontal and vertical control.

Decibel (dB): A logarithmic measurement of noise intensity.

Dedicated Corridor: Segment along the CHSTP alignment where high-speed trains operate in a right-of-way that is exclusive of other passenger or freight railroads.

Dedicated Track: Segment along the CHSTP alignment where high-speed trains operate on tracks exclusive of other passenger and freight railroads.

Degree of Curve: The central angle turned by a curve in 100 feet. It is closely approximated by Dc = 5730 feet / Radius. Railroad curves are defined by the Chord Definition, in which the length is described by a 100 foot long tangent between two points on the arc of the curve.

Densification: The process of making an element more compact by reducing air space.

Design Guidelines: Provide a preferred but not necessarily required direction for a particular design feature. Guidelines are designated with the word SHOULD.

Design Standards: Indicate a required direction for a particular design feature. Language relating to standards will include the word SHALL. The designer SHALL obtain written approval for any deviation from the standard.

Design Variance: Approved waiver from a CHSTP minimum standard.

Design Variance Request: The formatted information included in a request for approval

Dewatering: The process of removing water from an area or substance, such as fill material.

Digital Terrain Model: A three-dimensional model of digital surfaces of topographic features.

Disturbance: A discrete event, either natural or human induced, that causes a change in the condition of an ecological system.

Dry Utility: A wire, cable, pipeline, and support facility used to convey electricity, natural gas, gaseous chemicals, telecommunications, cable television, or other non-liquid products.

E

Easement: An interest in land owned by another individual or organization that entitles its holder to a specific limited use.

Ecosystem: A system formed by the interaction of living organisms, including people, with their environment.

Electromagnetic Field (EMF): The force field that extends outward from any moving electrical current, consisting of both a magnetic field and an electric field.

Electromagnetic Interference: An electrical emission or disturbance that causes degradation in performance or results in malfunctions of electrical or electronic equipment, devices, or systems.

Emergent: (1) Arising naturally. (2) Of vegetation, rooted in periodically or continuously inundated substrate, but with a portion of the plant extending above the water.

EMF: *See* **Electromagnetic Field**.

EMI: *See* **Electromagnetic Interference**.

Eminent Domain: A jurisdiction or agency's legal right to take private property for public use in exchange for fair compensation.

Emission and Dispersion Modeling System (EDMS): Modeling system used by the Federal Aviation Administration (FAA) to estimate airplane emissions generated from a specified number of landing and take-off (LTO) cycles.

Endangered Species: Any species listed under the federal Endangered Species Act as being in danger of or threatened with extinction throughout all or most of its range.

Enplanement: The act of boarding an airplane.

Environmental Impact Report (EIR): A detailed informational document that analyzes a project's potential significant effects and identifies mitigation measures and reasonable alternatives to avoid the significant effects. This document is part of the CEQA environmental review process.

Environmental Impact Statement (EIS): A detailed informational document that analyzes a project's potential significant effects and identifies mitigation measures and reasonable alternatives to avoid the significant effects. This document is part of the NEPA environmental review process.

Environmental Justice: Identifying and addressing the potential for disproportionately high and adverse effects of programs, policies, and activities on minority populations and low-income populations.

Erosion: Process by which earth materials are worn down by the action of flowing water, ice, or wind.

Ethnicity: A grouping or category of people based on shared cultural traits such as ancestral origin, language, custom, or social attitude.

F

Fare Gate: Physical barrier which requires a valid CHST ticket to pass.

Farmland of Local Importance: Farmlands that are important to the local agricultural community, as determined by each county's board of supervisors and local advisory committee. See also Farmland of Statewide Importance, Prime Farmland.

Farmland of Statewide Importance: Farmlands of statewide importance are similar to prime farmlands but have been evaluated as less valuable because they have steeper slopes, less ability to retain moisture in the soil, or other characteristics that limit their use. To quality as farmland of statewide importance, a property must have been used for production of irrigated crops at some time during the previous 4 years.

Farmland Severance: Because agricultural land usually consists of large parcels, the acquisition of part of a property results in the severance (disconnection) of land retained under agricultural use, and in impacts associated with construction and with occupation or use of developed areas.

Fault: A fracture in the earth's lithosphere (brittle rocky shell) along which movement has occurred.

Feasible: Capable of being implemented.

Fecundity: Fertility; potential to be fruitful in offspring or vegetation.

Feeder route: Branch routes that feed into main (arterial) routes.

Fiber Optic Cable System: A data transmission technology that relies on light rather than electricity, conveying data through a cable consisting of a central glass core surrounded by layers of plastic.

Fill Slope: A slope shaped by the placement and compaction of loose "fill" materials, which may be reused from elsewhere on the construction site, or imported.

Fiscally or Financially Constrained Plans: Plans that are limited by the foreseen availability of project funding in a region.

Flyover: A bridge that carries one road or rail alignment aerially over another.

Footprint: Area of the ground surface covered by a facility, or affected by construction activities.

Free Area: Area within the station which are open to the general public.

Frequency: The number of times a field, such as an electromagnetic field, changes direction in space each second. Also, the number of trains, flights, or other transportation service occurring in a given time period.

G

G Force: A force whose magnitude is equal to the gravitational force acting on a body at sea level, expressed as 1.0g.

Gauss: Unit of measure describing the strength of a magnetic field. Near the surface of the earth, the earth's magnetic field measures approximately 0.5 gauss (0.1 Telsa). *See also* **Tesla**.

General Plan: A planning document, usually at the city or county level, that encapsulates policies for land use and development over a specified period of time. A general plan may be supplemented by specific plans that address land use and development policies for specific portions of a planning jurisdiction, such as historic districts or areas slated for redevelopment.

Geographic Information System (GIS): An information management system designed to store and analyze data referenced by spatial or geographic coordinates.

Giga: Prefix meaning *1 billion*.

GIS: *See* **Geographic Information System.**

Grade, Gradient: The slope of changes in elevation, defined in percentage, as feet of rise in 100 feet. Sometimes defined in European publication as millimeters of rise in one meter, in which case it is normally written as $^{o}/oo$.

Grade Crossing: The intersection of a railroad and a highway at the same elevation (grade); an intersection of two or more highways; an intersection of two railroads.

Grade-Separated: At different elevations; on separate levels.

Greenhouse Gases: A class of air pollutants believed to contribute to the "greenhouse" global warming effect, including nitrogen oxides (NO_x) hydrocarbons (HC), and carbon dioxide (CO_2).

Grid: A system of interconnected power generators and power transmission lines that is managed to meet the requirements of energy users connected to the grid at various points.

Groundwater: Water contained and transmitted through open spaces within rock and sediment below the ground surface.

Growth Inducement: Contribution to the rate or extent of development in an area.

Guard Rail: A short guidance rail in the track. When a wheel passes over a switch frog in a non-guided section, the opposite wheel is guided by the guard rail, which acts on the back of the wheel flange.

Guideway: Defined by the Orange County Transportation Authority as "a track or riding surface that supports and physically guides transit vehicles specially designed to travel exclusively on it."

H

Habitat: An environment where plants or animals naturally occur; an ecological setting used by animals for a particular purpose, such as *roosting habitat*, *breeding habitat*, etc.

Headway: The time between buses, trains, or other transit vehicles at a given point. For example, a 15-minute headway means that one bus arrives every 15 minutes.

Herbaceous: Describes plants that have little or no woody tissue. Herbaceous plants typically survive for only a single growing season.

Heritage Resources: An alternate term for cultural resources used in some planning documents. *See* **Cultural Resources**.

Hertz: A unit of measure describing **frequency**, equal to cycles (number of reversals) per second.

High Risk Utility: Utility facilities conducting or carrying specific materials identified in Section 2 of the Caltrans Project Development Procedures Manual, Appendix LL – Utilities. Other utilities that could disrupt the operation of CHSTP.

High-Speed Steel-Wheel-on-Steel-Rail Train: An improvement of traditional railroad passenger technology that has been designed to operate at speeds of 100 to 150 mph (160 to 240 kph) on existing rail infrastructure.

High-Speed Train: Refers to a train designed to operate safely and reliably at speeds near 200 mph (350 kph).

High Visual Impacts: Impacts sustained if features of a project alternative are very obvious, such that they begin to dominate the landscape and detract from the existing landscape characteristics or scenic qualities.

HST Alignment Alternatives: General location for HST tracks, structures and systems for the HST system between logical points within study corridors; they are generally configured along or adjacent to existing rail transportation facilities.

HST Network Alternatives: Represent different ways to implement the HST system in the study region with combinations of HST Alignment Alternatives and station location options.

HST Alignment Segment: A portion of alignment (often defined to distinguish sub-alternatives) that can be combined with other segments to form an alignment.

Hydrocarbons: A wide variety of organic compounds, including methane (CH_4), emitted principally from the storage, handling, and combustion of fossil fuels.

I

Impact: A change the condition or function or an environmental resource or environmental value as a result of human activity. (If referred to as *effect* in CHST document, change to Impact.)

In Lieu of: Instead of or in place of.

Indigenous Species: A native species; any plant or animal species that occurs naturally in a wilderness area and was not introduced, deliberately or accidentally, by humans.

Infrastructure: The facilities required for a societal function or service; e.g., *transportation infrastructure*, *utilities infrastructure*.

Initial Study: An environmental study carried out in compliance with CEQA, with the goal of evaluating whether a proposed project has the potential to result in significant impacts on the environment.

Insertion Loss: The actual noise-level reduction at a specific receiver due to construction of a noise barrier or some other intervention between the noise source (e.g., traffic) and the receiver.

In-Situ: In the original or natural position.

Intermediate Station: A train station that will be between two other previously planned or currently operating stations.

Intermodal: Describes transportation that involves more than one means (walk, bike, auto, transit, taxi, train, bus, air, etc.) during a single journey.

Interoperability: In the context of the European High-Speed Lines, is the aptitude of the European High-Speed lines railway network to allow high-speed trains to run safely and continuously with the specified performances. It is based on the whole of the legal, technical, and operational conditions that must be fulfilled to satisfy to the necessary requirements. For example, a German high-speed train satisfying to the requirements of the Rolling Stock Technical Specification for Interoperability (TSI) is able to run safely and continuously on a French high-speed line of which the infrastructure is satisfying to the different requirements of the different infrastructure Technical Specifications for Interoperability.

Intrusion: An errant vehicle's exit out of its right-of-way and entry into the operating space of another transportation system's right-of-way.

Inversion: A region where atmospheric temperature increases rather than decreasing with height, suppressing atmospheric mixing and tending to trap pollutants near the ground surface, where their effects on health and materials are greater.

Investment-Grade Ridership Forecast: Ridership forecast that is sufficiently detailed and reliable to permit responsible decision-making about capital expenditures.

J

K

Kilo: Prefix meaning *1 thousand*.

Kiss-and-Ride: Facility for private vehicles to drop-off or pick-up CHST patrons.

L

Landscape Unit: An area of distinct, but not necessarily homogenous, visual character.

Landslide: Movement of earth or rock materials downslope under the influence of gravity.

Land Use Compatibility Assessment: an assessment of the compatibility of a proposed project or land use with existing and projected land uses in nearby areas, based on the sensitivity of various land uses to change related to the alternatives and the impact of these changes on the land use.

Lead (Pb): A stable element that persists and accumulates both in the environment and in humans and animals, and can have toxic effects.

Lead Agency: The public agency that has the principal responsibility for carrying out or approving a project or action, and is thus responsible for preparing environmental review documents in compliance with CEQA and/or NEPA.

L_{eq}: A measure of the average noise level during a specified period of time.

L_{eq}(h), dBA: Equivalent or average noise level for the noisiest hour, expressed in **A-weighted decibels**.

Less than Significant: In CEQA usage, describes an impact that is not sufficiently adverse, intense, or prolonged to require **mitigation**.

Level of Service (LOS): A rating using qualitative measures that characterize operational conditions within a traffic stream and their perception by motorists and passengers.

Liquefaction: A type of ground failure in which soils or sediments lose their internal cohesion, cease to behave as a solid, and flow like a liquid.

Logarithmic Scale: A measurement in which the ratio of successive intervals is not equal to 1 (which is typical for linear scales) but is some common factor larger than the previous interval (a typical ratio is 10, so that the marks on the scale read: 1, 10, 100, 1000, 10000, etc. Logarithmic scales are useful for graphing values that have a very large range.

Longitudinal: A facility located parallel to and within highway or railway right-of-way.

Low Risk Utility: Per Section 2 of the Caltrans Project Development Procedures Manual, Appendix LL - Utilities, all other utilities that are not identified as High Risk Facilities.

Low Visual Impacts: Impacts sustained if features of a project alternative are consistent with the existing line, form, texture, and color of other elements in the landscape and do not stand out.

M

Magnetic Levitation (Maglev): A high-speed train technology that relies on attractive or repulsive magnetic forces to lift and propel the train along a guideway.

Mainline: A principal highway or railroad, exclusive of connectors, ramps, spurs, etc.

Main Line: The tracks allocated to the high-speed train traffic at normal commercial speed and not normally allowed for stops, shunting, or garage.

Maintenance: An air basin is considered to be in *maintenance* for a given pollutant if it was formerly in nonattainment but is now meeting the established standards for that pollutant. *See also* **Attainment, Nonattainment**.

Maintenance Siding: A dead end track dedicated to park maintenance trains and connected to a passing track, never to the main line.

Major Investment Study (MIS): A study that evaluates project alternatives for their ability to solve an area's transportation problems.

Master Plan: A comprehensive planning document intended to guide the long-range growth and development of a community or region, or the long-term management and use of a parkland.

Measure M: Approved by Orange County voters in November 1990, Measure M instituted a sales tax of 0.5 cent for countywide transportation improvements.

Mean High-Water Mark: The elevation reached by the water surface at the mean (average) high water level (average high tide elevation or average flood elevation), often indicated by physical characteristics such as erosion, lines of vegetation, or changes in type of vegetation.

Medium Visual Impact: Impacts sustained if features of a project alternative are readily discernable but do not dominate the landscape or detract from existing dominant features.

Mesoscale: Describes regional air quality analysis.

Microscale: Describes local air quality analysis.

Midden: Refuse accumulation associated with prehistoric use of a site or area.

Mitigation: Action or measure undertaken, minimize, reduce, eliminate, or rectify the adverse impacts of a project, practice, action, or activity.

Modal: A transportation system defined on the basis of specific rights-of-way, technologies, and operational features.

Monitoring: The collection of information to determine the effects of resource management and to identify changing resource conditions or needs.

Monoculture: The cultivation of a single product to the exclusion of other uses of land.

N

NAD 83: North American Datum of 1983 – The horizontal control datum for the United States based on the Geodetic Reference System 1980 and with a geocentric origin.

National Ambient Air Quality Standards (NAAQS): Federal standards stipulating the allowable ambient concentrations of specific criteria pollutants.

National Environmental Policy Act (NEPA): "Federal legislation requiring federal agencies to consider the environmental impacts of major federal projects or decisions, to share information with the public, to identify and assess reasonable alternatives, and to coordinate efforts with other planning and environmental reviews taking place."

NAVD 88: North American Vertical Datum of 1988 – The vertical control datum established for surveying elevations in the United States based on the General Adjustment of the North American Datum of 1988.

Nitrogen Oxides (NO_x): A class of pollutant compounds that include nitrogen dioxide (NO_2) and nitric oxide (NO), both of which are emitted by motor vehicles. *See* **Criteria Pollutants**.

No Action: Under NEPA, refers to an alternative under which no action would be taken (no infrastructure would be built and no new management or operational practices would be instituted). *See* **No Project**.

No Project: Under CEQA, refers to an alternative under which no action would be taken (no infrastructure would be built and no new management or operational practices would be instituted). *See* **No Action**.

No Project Alternative: Represents the region's (and state's) transportation system (highway, air, and conventional rail) as it is today and with implementation of programs or projects that are in regional transportation plans and have identified funds for implementation by 2030.

Nonattainment: An air basin is considered to be in *nonattainment* for a particular pollutant if it is exceeding federal or state standards for that pollutant. See also **Attainment**, **Maintenance**.

Non-Electrified Steel-Wheel-on-Steel-Rail Train: Conventional intercity diesel locomotive train equipment (e.g., Amtrak California Corridor trains).

Nonpoint Source Pollution: Pollution that cannot be traced to a single source, but collects from a wide area. Examples include pesticides or fertilizers that wash into rivers or percolate through the soil into groundwater.

Non-Water-Contact Recreation: Describes recreational activities where contact with the water is not likely, such as photography, wildlife viewing, etc.

Notice of Intent (NOI): Formal notice stating that an environmental impact statement will be prepared for a proposed project, published in the Federal Register by the federal lead agency.

Notice of Preparation (NOP): Formal notice stating that an environmental impact report will be prepared for a proposed project, issued by the state lead agency.

Noxious Weed: A plant that has been defined as a pest by law or regulation. Both the State of California and the federal government maintain lists of plants that are considered threats to the well-being of the state or the country.

NPL/Superfund List: Federal list of sites that have been identified as posing an immediate public health hazard and where an immediate response is necessary.

O

Ordinary High-Water Mark: The line on the shore of a body of water established by the fluctuation of water.

Ozone (O_3): A photochemical oxidant that is a major cause of lung and eye irritation in urban environments.

P

Paleontological: Related to the study of life in past geologic time.

Pantograph Power Pickup: A device for collecting current from an overhead wire, consisting of a hinged vertical arm operated by springs or compressed air and a wide, horizontal contact surface that slides along the wire.

Park and Ride: Facility where CHST patrons can park and leave personal vehicles prior to transfer to CHST.

Parcel: A distinct, continuous portion or tract of land.

Passing Track: Track connected to the main line on both ends and allowing to stop a train for commercial reasons (in station for example), for operating purposes (in order to deal with delayed train or train with technical incident but also to allow train overtaking).

Particulate Matter: Liquid and solid particles of a wide range of sizes and compositions; of particular concern for air quality are particles smaller than or equal to 10 microns and 2.5 microns in size (PM10 and PM2.5 respectively).

Photogrammetry: The art, science, and technology of obtaining reliable information about physical objects and the environment through process of recording, measuring, and interpreting images and patterns of electromagnetic radiant energy and other phenomena.

Pick-Up and Drop-Off: Facility for private and semi-private vehicles to drop-off or pick-up CHST patrons, could include facilities for taxis, private shuttles, rental cars.

Plat: A plan or map of a plot of ground.

Platform: Station area adjacent to tracks where trains stop to allow passengers to board and alight.

Point Source Pollution: Pollution that can be traced to a single source. An example is a smokestack at a factory.

Pothole / Test Pit: An excavation to expose an underground facility.

Poverty Level: For example, the poverty level was defined in 1999 for a family of four as a income of $16,700 or less.

Practicable: Available and capable of being done after taking into consideration cost, existing technology, and logistics in light of overall project purposes.

Preferred Alternative: The alternative identified as preferred by the lead agencies.

Program-Level: Refers to a CEQA or NEPA environmental review that covers the broad spectrum of a large, complex, regionally extensive effort comprised of a number of smaller, regionally focused projects or phases.

Project: Refers to more detailed site-specific environmental analysis focusing on a single project that is part of a larger program.

Prime Farmland: Rural land that has the best combination of physical and soil chemistry characteristics for producing food, feed, forage, fiber, and oilseed crops, and is available for these uses.

Public Transportation: Includes bus, trolley bus, streetcar or trolley car, subway or elevated, railroad, ferryboat, and taxicab service.

Purpose and Need: The reason(s) why a project or action is undertaken, and the need(s) it is intended to meet or fulfill.

Q

Quality Level: A level of accuracy scale used for identifying the location of underground and above ground utility facility information needed to develop capital projects, and for acquiring and managing that level of information during the project development process.

Quantm System: An route selection and optimization tool that carries out automated three dimensional alignment searches and corridor screening based on client- or user-specified geometry, constraints, and cost parameters.

Queuing Area: Station area where passengers can wait in a line without disrupting other passenger flow.

R

Radio Frequency: The frequency range of the electromagnetic spectrum that is used for radio communication.

Ranchette: A rural or semi-rural ranch-style residence with a comparatively small acreage.

Reactive Organic Gases (ROG): Reactive **hydrocarbon** pollutants.

Regional Transportation Improvement Plan: A listing of all transportation projects proposed over a six-year period for a given region. The regional transportation improvement program (RTIP) is prepared to implement projects and programs listed in the RTP and is developed in compliance with state and federal requirements.

Regional Transportation Plan: A long-range (20+ year) transportation plan. The regional transportation plan (RTP) identifies major challenges as well as potential opportunities associated with growth, transportation finances, the future of airports in the region, and impending transportation system deficiencies that could result from growth anticipated in the region. There are typically two components of the RTP, a financially constrained and financially unconstrained version. The financially constrained version of the RTP includes projects and programs that fit within existing and planned funding sources.

Relocations: The removal, rearrangement, reinstallation, or adjustment of a utility facility required by a transportation improvement project.

Richter Scale: A logarithmic scale measuring the severity of earthquakes, based on the magnitude of ground motion.

Ridership: The number of people who ride a transportation system.

Right-of-Way: A legal right of passage over a defined area of real property. In transit usage, refers to the corridor along a roadway or track alignment that is controlled by a transit or transportation agency/authority. Always spell out.

Riparian: Relating to, living, or located on the bank of a natural watercourse, lake, or tidewater.

Riprap: Armoring consisting of randomly placed rock or concrete, used to strengthen an embankment or protect it from **erosion**.

Rolling Stock: Wheeled railway vehicles.

Ruderal: Weedy vegetation, commonly including or dominated by introduced species, characteristic of areas where native vegetation has been disturbed or removed.

S

Scale: A graduated line representing a proportionate size.

Scenic Corridor: Corridor with landscapes and vistas of high scenic quality.

Scoping: A process used under both CEQA and NEPA to determine the scope of issues to be addressed and for identifying the significant issues related to the proposed action or project to be addressed in an environmental impact report or environmental impact statement.

Screenline: An imaginary line across parallel roadways that defines a zone of analysis.

Section 4(f): Refers to provisions originally enacted as Section 4(f) of the U.S. Department of Transportation Act of 1966 (23 C.F.R. 771.135) and subsequently codified in 49 U.S.C., Subtitle I, Section

303(c). The "Section 4(f)" provisions address the potential for conflicts between transportation needs and the protection of lands for recreational use and resource conservation by regulating the use of publicly owned parkland, recreation areas, and historic sites. Specifically, they prohibit the Secretary of Transportation from approving any program or project that would require the use of any publicly owned land from a public park, recreation area, wildlife or waterfowl refuge, or land of an historic site of national significance as determined by the officials having jurisdiction over these lands, unless there are no feasible and prudent alternatives to the use of these lands. In addition, a proposed program or project must include all possible planning to minimize harm resulting from the proposed use.

Section 6(f): State and local governments often obtain grants through the to acquire or make improvements to parks and recreation areas (16 U.S.C. § 460-4 through 460-11, September 3, 1964, as amended 1965, 1968, 1970, 1972–1974, 1976–1981, 1983, 1986, 1987, 1990, 1991, 1993–1996). Refers to Section 6(f) of Land and Water Conservation Fund Act of 1964, which prohibits the conversion to a non-recreational purpose of property acquired or developed with funds granted through the Act without the approval of the National Park Service. Section 6(f) directs the Department of the Interior to ensure that replacement lands of equal value (monetary), location, and usefulness are provided as conditions to such conversions. Consequently, where such conversions of Section 6(f) lands are proposed for transportation projects, replacement lands must be provided.

Sedimentary Rock: Rock resulting from the consolidation of sediment.

Seiche: Oscillation or "sloshing" of water in a lake, bay, or other enclosed body as a result of landsliding or seismic groundshaking.

Senate Bill 45: Bill that instituted consolidation of various funding programs into the STIP and increased accountability for programming and delivery of STIP projects to the regions around the state and the various Caltrans' districts.

Sensitivity Analysis: An analysis that assesses how sensitive the outcomes predicted by modeling are to changes in different model inputs (assumptions or variables).

Service: The portion of the electrical, gas, water, or sewer system that connects a customer, usually at the meter location, to the utility distribution or supply system.

Shadow impact: shadow impact ranking would be high if a new (not existing) elevated structure were within 75 ft (23 m) of residential or open space, natural areas, or parkland.

Shared Right-of-Way: A CHSTP alignment where high-speed trains operate in proximity to other transportation systems, including conventional passenger railroads and freight railroads, without sharing tracks. Also includes highways.

Shared Use Corridor: Segment along the CHSTP alignment where high-speed trains operate on exclusive tracks located along rail corridors or right-of-ways where conventional passenger and freight railroads operate.

Shared Use Track: Segment along the CHSTP alignment where high-speed trains operate with other passenger railroads, i.e., Caltrain, MetroLink, and Amtrak, on the same tracks.

Significant: In CEQA usage, describes an impact that is sufficiently adverse, intense, or prolonged to require **mitigation**. For NEPA usage see 40 C.F.R. 1508.27.

Sleeve: A pipe in which a pipeline or conduit is inserted.

South Coast Air Quality Management District: The regional regulatory agency with the primary responsibility for improving air quality in the South Coast Air Basin.

Special Provision: Specific clauses setting forth conditions or requirements peculiar to the work and supplementary to the projects Standard Specifications.

Spiral: Curve of variable radius used to connect a straight section of track with the radius of the body of the curve. Sometimes call a Transition or a Transition Spiral in European publications.

State Implementation Plan: Statewide plan for complying with the federal Clean Air Act. The State Implementation Plan (SIP) consists of narrative, rules, and agreements that California will use to cleanup polluted areas.

State Transportation Improvement Program: A multi-year capital improvement program of transportation projects on and off the state highway system, funded with revenues from the State Highway Account and other funding sources. STIP programming generally occurs every two years.

Station Location Options: General locations that represent the most likely HST stations based on current knowledge, consistent with the objectives to serve the state's major population centers.

Strike-Slip Fault: A fault along which the dominant direction of movement is parallel to the fault trace (the expression of the fault on the ground surface).

Stub End: A track that terminates at one end.

Subsidence: Sinking or lowering of the ground surface.

Sulfur Oxides (SO_x): Sulfur-oxygen compounds that include the important **criteria pollutants** sulfur dioxide (SO_2) and sulfur trioxide (SO_3).

Superelevation: The difference in elevation between the outside rail of the curve and the inside rail of the curve measured between the highest point on each rail head. Normally called Cant in European publications.

T

Take: As defined in Section 3 of the federal Endangered Species Act, "to harass, harm, pursue, hunt, shoot, wound, kill, trap, capture, or collect, or to attempt to engage in any such conduct."

Terminal Station: The first or last station of a passenger rail route.

Tesla: Unit of measure describing the strength of a magnetic field. *See also* **Gauss**.

Tiering: Refers to the practice of addressing general issues in broader environmental impact reports or statements such as **program-level** documents and providing more detailed site-specific analyses in subsequent (typically **project)** documents that "incorporate" the initial broad analysis by reference.

Topographic Map: A map of the features of the actual surface of the earth considered collectively as to form.

Total Organic Gases (TOG): A pollutant classification that includes all **hydrocarbons**, both reactive and non-reactive.

Trainset: A complete unit of **rolling stock** that makes up a single train.

Transit-Dependent Population: The population over the age of 16 (workers) who use **public transportation** as a means of traveling to and from work.

Transit Node: A connection, station, or terminal on a transit network.

Transportation Demand Management: The operation and coordination of various transportation system policies and programs to manage travel demand to make the most efficient and effective use of existing transportation services and facilities.

Transportation System Management: actions that improve the operation and coordination transportation services and facilities to realize the most efficient use of the existing transportation system.

Transverse: A facility passing from one side of the right-of-way to the other side of the right-of-way.

Travel Time: The time spent on the road, in the air, or on a train from a place of origin to a place of destination. *Total travel time* includes the time required to reach a station or an airport, time spent waiting for the next scheduled train or flight, time spent getting to the boarding area, time spent checking and retrieving luggage, time spent getting a rental car or taxi, as well as time spent to reach the final destination.

Tributary Watercourse: A stream feeding a larger stream or a lake.

Trinomial: An alphanumeric abbreviation for a previously identified historic or prehistoric resource, such as CA-ORA-1352, representing the state (e.g., California or CA-), the county (e.g., Orange or -ORA-), and a unique number assigned by the State Historic Preservation Office (such as -1352).

Tsunamis: Waves that travel in the open ocean and are caused by an undersea earthquake, landslide or volcanic activity.

U

Unavoidable: In CEQA and NEPA usage, describes an impact that cannot be entirely avoided, reduced, or compensated for.

Unbalance, Unbalanced Superelevation: The difference between the Superelevation and Equilibrium Superelevation. In European publications, Unbalance is called Cant Deficiency if the actual Superelevation is less than the Equilibrium Superelevation and Excess Cant if the actual Superelevation is greater than the Equilibrium Superelevation.

Unique Farmland: Farmland with soils of lower quality than either **prime farmland** or **farmland of statewide importance**, but still used for the production of crops. Unique farmlands are usually irrigated, but may include nonirrigated orchards or vineyards in some of California's climate zones in California. To quality as unique farmlands, a property must have been in crops at some time during the previous 4 years.

Units of Measure:

Table of Metric Equivalents	
Length	
Unit	**Approximate U.S. Equivalent**
kilometer	0.62 mile
meter	39.37 inches
centimeter	0.39 inch
Area	
Unit	**Approximate U.S. Equivalent**
square kilometer	0.3861 square miles
hectare	2.47 acres
Capacity	
Unit	**Approximate U.S. Equivalent**
liter	1.057 quarts
Mass and Weight	
Unit	**Approximate U.S. Equivalent**
metric ton	1.102 short tons (2,204.6 pounds)
kilogram	2.2046 pounds
gram	0.035 ounce
Speed	
Unit	**Approximate U.S. Equivalent**
kilometer per hour	0.621 mile per hour

Uplift: The action of a portion of the earth's surface as it rises above adjacent areas. An area of higher elevation than surrounding areas; an area that has been uplifted.

V

Variance: Approved deviation, or exception, from a CHSTP Minimum design criteria or Minimum design standard.

V/C Ratio: Volume to capacity ratio; describes the relationship between the amount of traffic a roadway was designed to carry and the amount of traffic it actually carries. Related to the **level of service (LOS)** the roadway can provide.

Vertical Curve: The transition between grades is normally parabolic in US and Asian practices and circular arc radii in European practices.

Very High Speed Steel-Wheel-on-Steel-Rail Train: A train capable of maximum operating speeds near 220 mph (350 kph) utilizing steel-wheel-on-steel-rail technology.

Viaduct: A bridge that conveys a road or a railroad over a valley often constructed of a series of arches supported by piers.

Viewshed: Total visible area from a single observer position, or the total visible area from multiple observer positions. Viewsheds are accumulated seen-areas from highways, trails, campgrounds, towns, cities, or other viewer locations. Examples are corridor, feature, or basin viewsheds.

Visual Intactness: The aesthetic integrity of the visual environment and its freedom from encroaching elements.

Visual Resources: The natural and artificial features of a landscape that characterize its form, line, texture, and color.

Visual Unity: The visual coherence and compositional harmony of a landscape when considered as a whole.

Visual Vividness: The visual power or memorability of landscape components as they combine in patterns experienced by the viewer.

Volt: Standard unit of measure for electrical potential.

W

Water-Contact Recreation: Recreational activities in which contact with the water is intended or likely, such as swimming, water-skiing, and fishing.

Watershed: The area that contributes water to a drainage system or stream.

Watt: Standard unit of measure for electrical power.

Wayside Power: Electrical power provided from the utility grid to the electrified railroad right-of-way at convenient locations from the side of the rail tracks or corridor.

Weir: A small dam that restricts flow in a stream in order to raise water level, or diverts flow into a desired course.

Wet Utility: A pipeline that conveys liquid through gravity and/or pressured systems for public purposes (i.e., water and waste water).

Wetland: An area that is regularly saturated by surface water or groundwater and is characterized by a prevalence of vegetation that is adapted for life in saturated soil conditions.

Wildlife Corridor: A belt of habitat that is essentially free of physical barriers such as fences, walls, and development, and connects two or more larger areas of habitat, allowing wildlife to move between physically separate areas.

X

Y

Yard Track: Dead end track dedicated to operation needs and connected to a passing track, never to the main line.

Z

Design Terminology

The following figures describe structural design terminology frequently used for rail projects.

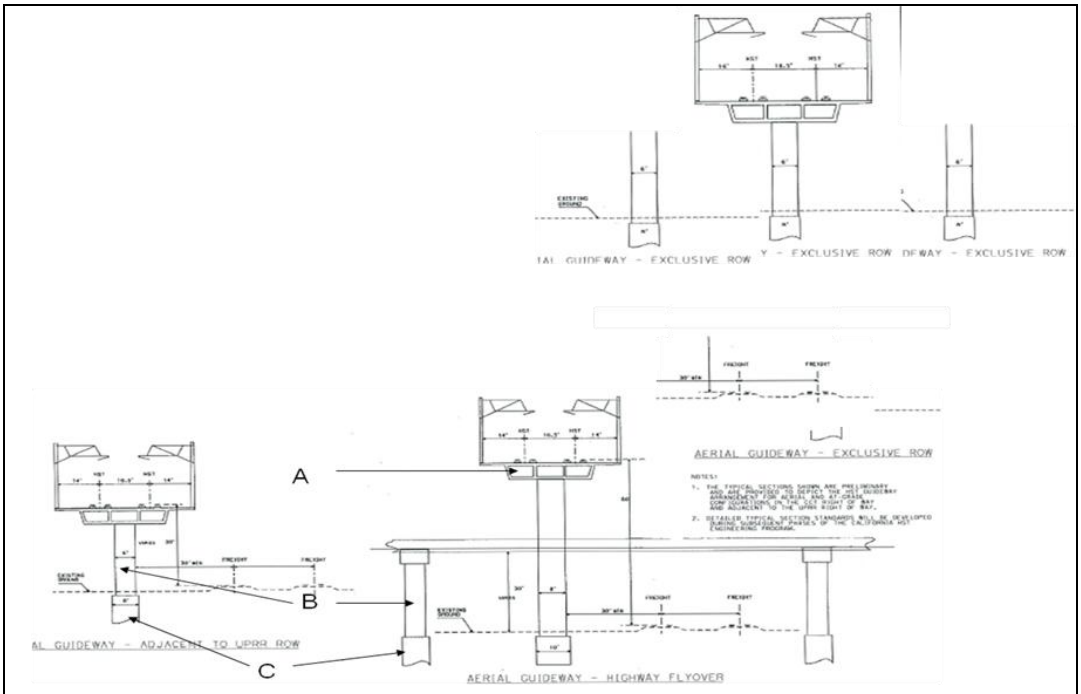

A-Superstructure, shown is "Box Girder" type. They may be individual precast "I" girders
B-Generally called Bents (some times Piers), the single component is Columns
C-Foundation: Piles or Shafts (shown). Foundations may also be group of steel piles with a pile cap, or simply a spread footing with out piles on good soil.

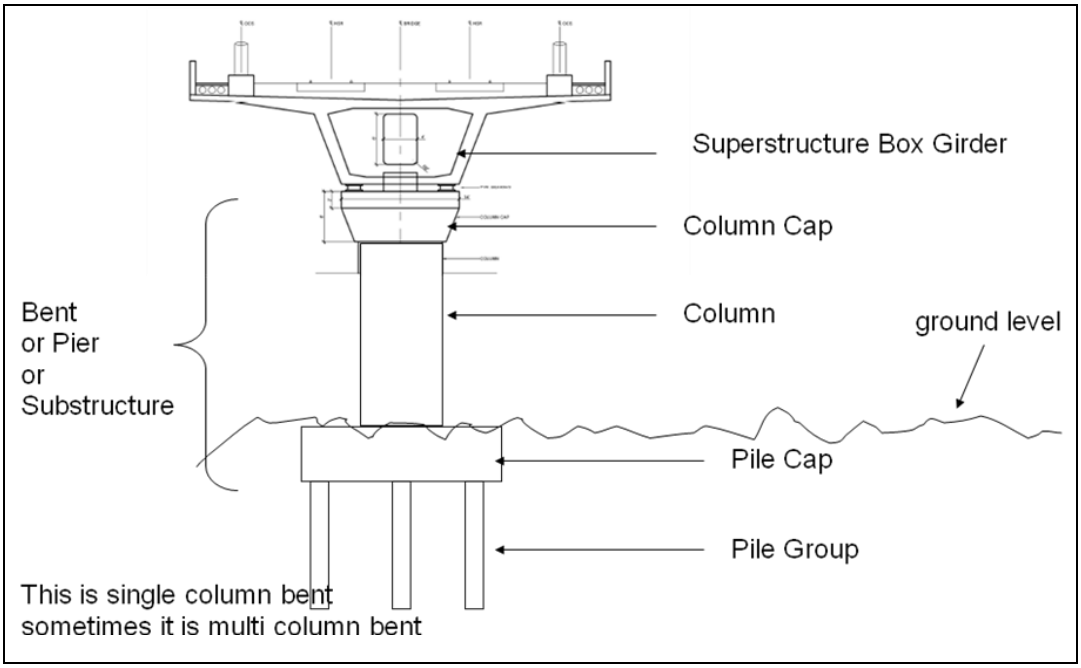

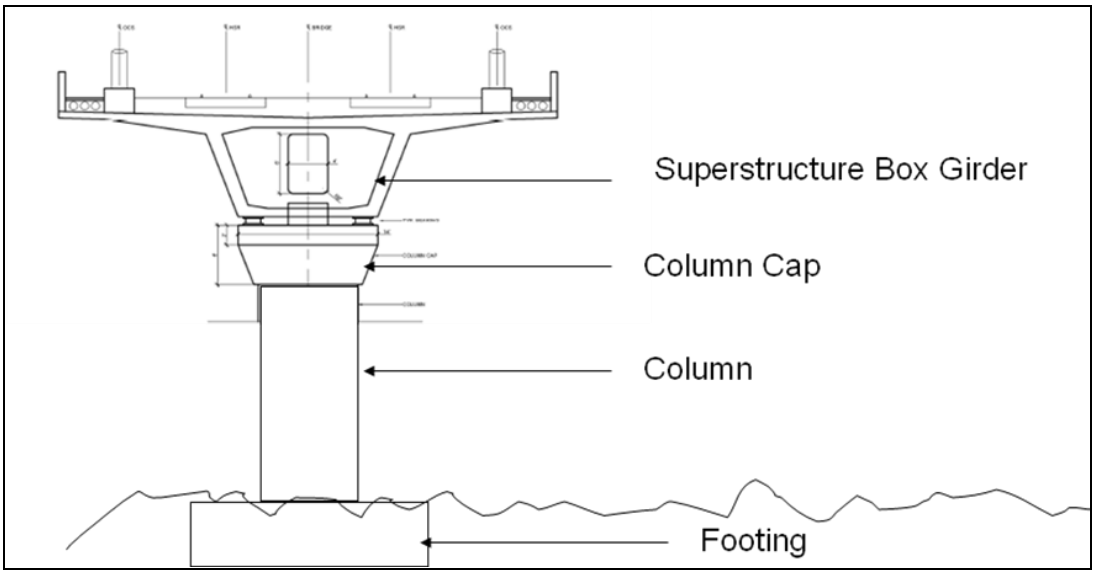
Superstructure Box Girder
Column Cap
Column
Footing

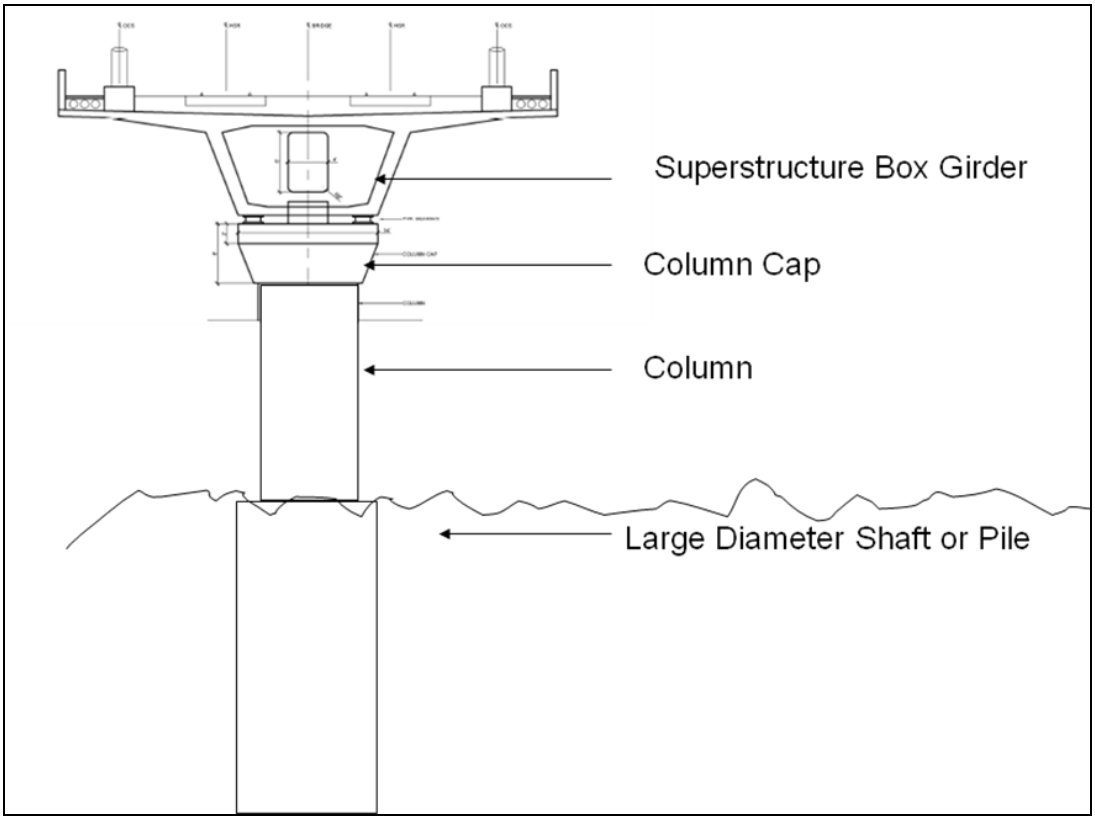
Superstructure Box Girder
Column Cap
Column
Large Diameter Shaft or Pile

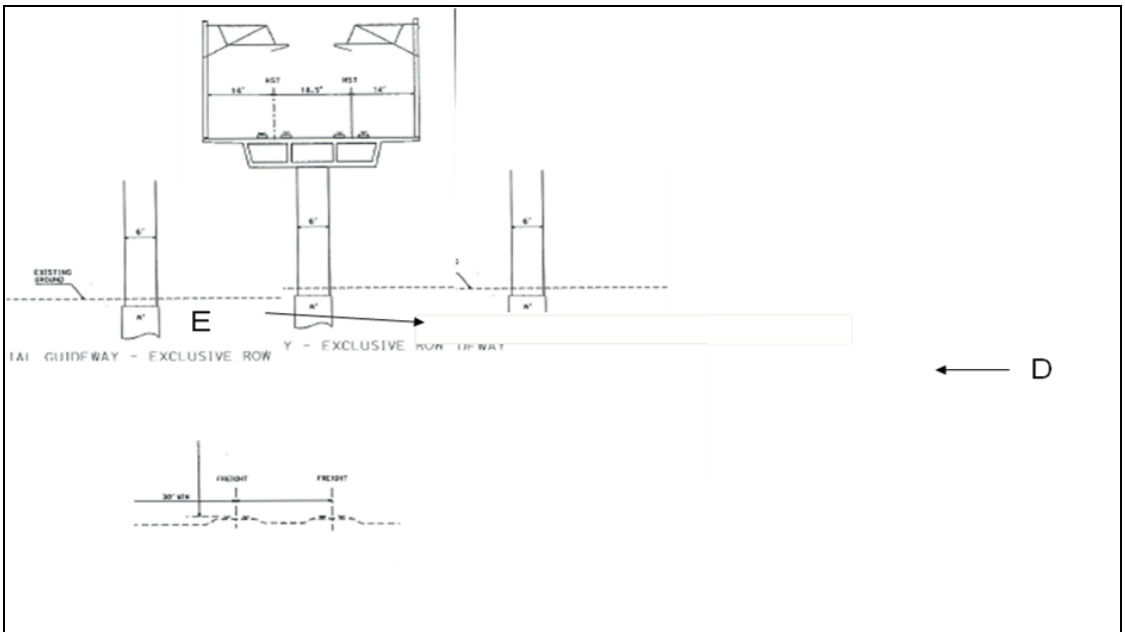

D-this is a 2-column Bent, also referred to as "outrigger Bent or Pier"
E-Bent or Pier Cap

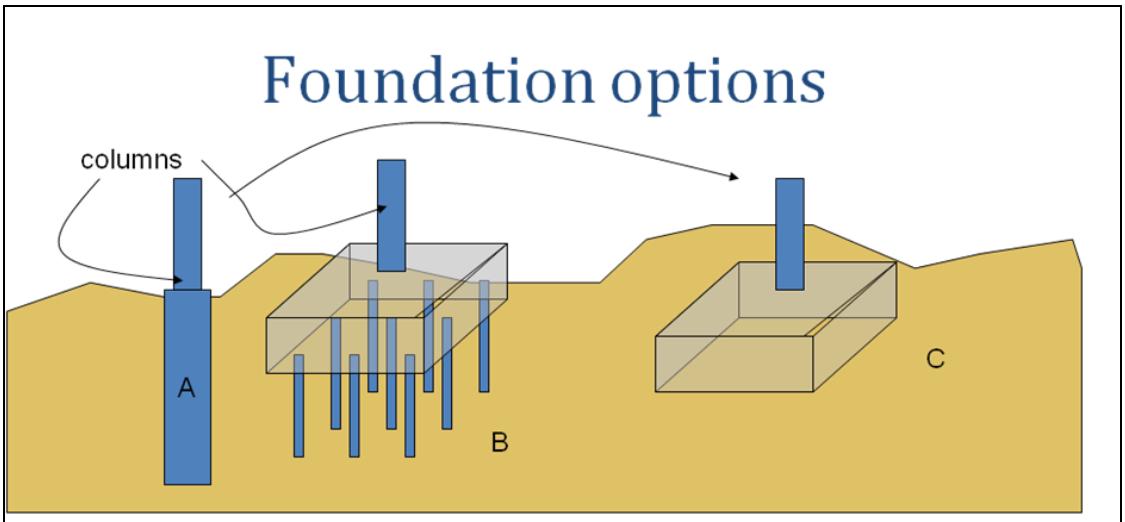

A-Cast in Drilled Hole (CIDH) or Cast in Steel Sheel (CISS) pile or shaft
B-Driven piles, sometimes steel I shape, sometime concrete, some time steel pipes with a Pile Cap
C-If soil is good they can have a "footing" just rest on soil with no piles

Acronyms and Abbreviations

A

AA	Affected Agency
AACE	Association for the Advancement of Cost Engineering
AADT	Average Annual Daily Traffic
AAR	Association of American Railroads
AASHTO	American Association of State Highway Transportation Officials
AC	Asphalt Concrete; Alternating Current
ACI	American Concrete Institute
ACHP	Advisory Council on Historic Preservation (Federal)
ACR	Assembly Concurrent Resolution
ADA	Americans with Disabilities Act (Federal)
ADT	Average Daily Traffic
A&E	Architectural and Engineering
AIS	Appearance Information Sheet
AC	Asphalt Concrete
ACI	American Concrete Institute
ACHP	Advisory Council on Historic Preservation (Federal)
ACR	Assembly Concurrent Resolution
ACSR	Aluminum Conductor Steel Reinforced
ADA	Americans with Disabilities Act (Federal)
ADAAG ADA	Accessibility Guidelines for Buildings and Facilities
ADT	Average Daily Traffic
A&E	Architectural and Engineering
AEC	Aerial Earth (Ground) Conductor
AIS	Appearance Information Sheet
AISC	American Institute of Steel Construction
ANAC	Approaching Noise Abatement Criteria
ANSI	American National Standards Institute
APCD	Air Pollution Control District
APE	Area of Potential Effects
APEFZ	Alquist-Priolo Earthquake Fault Zone
AQMD	Air Quality Management District
AREMA	American Railway Engineering and Maintenance–of-Way Association
ASC	Accounting Service Center (Caltrans HQ)
ASCE	American Society of Civil Engineers
ASTM	American Society for Testing and Materials
AT	Autotransformer
ATC	Applied Technology Council
AVE	Alta Velocidad Española
AWS	Structural Welding Standards

B

BART	Bay Area Rapid Transit
BCDC	(San Francisco) Bay Conservation and Development Commission
BDA	Bridge Design Aids
BDD	Bridge Design Details
BDP	Bridge Design Practice
BDS	Bridge Design Specifications

BEC	Buried Earth (ground) Conductor
BEES	Basic Engineering Estimating System
BNSF	Burlington Northern Santa Fe Railroad
BMPs	Best Management Plans
BR	Bridge Restoration and Replacement Program (Federal)
BRT	Bus Rapid Transit
BSO	Basic Safety Objective

C

CA	Certification Acceptance
CAAA	Clean Air Act Amendments (Federal)
CADD	Computer-Aided Design and Drafting
CAH	Controlled Access Highway
CALNET	California Integrated Telecommunications Network
Caltrans	California Department of Transportation
CAM	Cooperative Agreement Manual
CAR	Cooperative Agreement Report
CBC	California Building Code
CBDM	California Department of Transportation - Bridge Design Manual
CCC	California Coastal Commission (State)
CCEM	Capital Cost Estimating Methodology
CCEP	Capital Coat Estimating Program
CCEWG	Capital Cost Estimating Working Group
CCF	Central Control Facility
CCJPA	Capital Corridor Joint Powers Authority
CCO	Contract Change Order
CCS	California Coordinate System
CCTV	Closed Circuit Television
C-D	Collector-Distributor
CDC	CHST Design Criteria
CDF	California Department of Forestry (State)
C-E	Construction Evaluated
CE1	Categorical Exclusion (Federal)
CE2	Categorical Exemption (State)
CEC	Caltrans Encroachment Committee (Obsolete)
CEG	Certified Engineering Geologist
CEQA	California Environmental Quality Act (State)
CES	Customer Emergency Stations
CFR	Code of Federal Regulations
CFS	CHST Facility Standards
CGS	California Geological Survey
CHD	County Health Department
CHP	California Department of Highway Patrol (State)
CHSRA	*NOT USED. Use Authority.*
CHST	California High-Speed Train
CHSTP	California High-Speed Train Project
CIWMB	California Integrated Waste Management Board (State)
CMA	Congestion Management Agency
CMAQ	Congestion Mitigation and Air Quality Program (Federal)
CMP	Congestion Management Program
Co	County
COG	Council of Governments

CP	Control Point
CPH	California Permit Handbook
CPM	Critical Path Method
CPT	Cone Penetration Test
CPTED	Crime Prevention Through Environmental Design
CPUC	California Public Utilities Commission
CRP	Community Relations Plan
CRR	Commuter Rail Program (State)
CSP	Capital Scheduling Plan
CTC	California Transportation Commission (State)
CTP	California Transportation Plan
CTRL	Channel Tunnel Rail Link
CW	Contact Wire

D

DAF	Damage Assessment Form (Federal)
DARC	District Airspace Review Committee
DB	Design Build
DBA	Decibel-A Scale
DBE	Disadvantaged Business Enterprise; Design Base Earthquake
DBR	Discretionary BR (Federal)
DC	Direct Current
DD	District Director
DDD	Deputy District Director
DED	Draft Environmental Document
DES	Division of Engineering Service (Caltrans HQ)
DFG	Department of Fish and Game (State)
DHV	Design Hourly Volume
DI	Delay Index
DIS	Design Intent Statement
DOD	Division of Design (Caltrans HQ); Department of Defense (Federal)
DOE	District Office Engineer
DOS	Division of Structures of the ESC (Caltrans HQ)
DOT	Department of Transportation (Federal)
DPM	Design Project Manager
DPR	Draft Project Report
DRIS	Draft Relocation Impact Study/Statement
DSA	Division of State Architect, Department of General Services (State)
DSC	Differing Site Conditions
DSHA	Deterministic Seismic Hazard Analysis
DSMP	District System Management Plan
DTM	Digital Terrain Model
DU	Design Unit

E

EA	Environmental Assessment (NEPA); Expenditure Authorization
EAG	Encroachment Advisory Group
EB	Eastbound (tables and figures only)
ED	Environmental Document
EDP	Electronic Data Processing
EEM	Environmental Enhancement and Mitigation (State)

EIR	Environmental Impact Report (CEQA)
EIS	Environmental Impact Statement (NEPA)
EM	Engineering Manager
EMC	Electro Magnetic Compatibility
EMI	Electro Magnetic Interference
EMT	Engineering Management Team
ENR	Engineering News Report
EPB	Earth Pressure Balanced
EPA	Environmental Protection Agency (Federal)
ER	Emergency Relief Program (Federal)
ESAL	Equivalent Single-Axle Loads
ETW	Edge of Traveled Way

F

F.Y./FY	Fiscal Year
FA	Fire Agency
FAA	Federal Aviation Administration (Federal)
FAPG	Federal-Aid Program Guide (Federal)
FAS	Federal-Aid Secondary (obsolete)
FAU	Federal-Aid Urban (obsolete)
FCA	Fire Control Agency
FCR	Flexible Congestion Relief Program (State)
FED	Final Environmental Document
FEE	Functional Evaluation Earthquake
FEMA	Federal Emergency Management Agency (Federal)
FER	Fault Evaluation Report
F&E	System Freeway and Expressway System
FHWA	Federal Highway Administration (Federal)
FONSI	Finding of No Significant Impact (NEPA)
FRA	Federal Railroad Administration
FRIS	Final Relocation Impact Study/Statement
FSTIP	Federal State Transportation Improvement Program (Federal)
FTA	Federal Transit Administration (Federal)
FTIP	Federal Transportation Improvement Program (Federal)

G

GBR	Geotechnical Baseline Report
GBR-B	Geotechnical Baseline Report for Bidding
GBR-C	Geotechnical Baseline Report for Construction
GDR	Geotechnical Data Report
GIS	Geographic Information System
GMA	Ground Motion Analysis
GO	General Order
GS	(Department of) General Services (State)
GSHA	Geologic and Seismic Hazards Analysis
GTGM	FHWA Geotechnical Technical Guidance Manual

H

HD	Hard Drawn
HDM	Highway Design Manual

HDPE	High Density Polyethylene
HES	Hazard Elimination Safety Program (Federal)
HIA	Highway Improvement Agreement
HOV	High-Occupancy Vehicle
HP	Highway Planting
HP&R	Highway Planting and Restoration
HPSR	Historic Properties Survey Report
HQ	Caltrans Headquarters
HSR	High-Speed Rail
HST	High-Speed Train
HV	High Voltage
HW	Hazardous Waste
HWMP	Hazardous Waste Management Plan

I

IA	Interagency Agreement
IBC	International Building Code
IC	Interstate Completion Program (Federal)
ICE	InterCity Express
IFA	Involved Federal Agency
IGR	Intergovernmental Review
IM	Interstate Maintenance Program (Federal)
IMP	Impedance Bond
IR	Infrared
IRR	Intercity Rail Program (State)
IRRS	Interregional Road System (State)
IRS	Interregional Road System Program (State)
IS	Initial Study (CEQA)
ISA	Initial Site Assessment
ISRM	International Society for Rock Mechanics
ISTEA	Intermodal Surface Transportation Efficiency Act of 1991 (Federal)
ITMS	Intermodal Transportation Management System

J

JPB	Joint Powers Board

K

KP	Kilometer Post; Kilometric Point
kPa	Kilo Pascal
KPH/kph	Kilometers per hour
KTX	Korean High Speed Rail

L

LA	Los Angeles (California, USA); Local Agency; Landscape Architect
LAAPS	Local Agency Automated Pay System
LACMTA	LA County Metropolitan Transportation Authority
LADWP	Los Angeles Department of Water and Power
LAP	Landscape Architecture Program, of the DOD(Caltrans HQ)
LAQMD	Local Air Quality Management District

LAUS	Los Angeles Union Station
LCC	Local Coastal Commission
LCCA	Life Cycle Cost Analysis
LDBE	Lower-level Design Basis Earthquake
LEDPA	Least Environmentally Damaging, Practicable Alternative
LEQ	Equivalent Sound Level
LOC	Locally Funded State Highway Projects
LOS	Level of Service
LOSSAN	Los Angeles to Orange County Corridor operated by the Southern California Regional Rail Authority
LOTB	Logs of Test Borings
LRFD	Load and Resistance Factor Design
LRT	Light Rail Transit
LSA	Low Sun Angle
LTC	Local Transportation Commission
LUSAS	Civil Engineering Analytical Software
LV	Low Voltage

M

m	Meter
MCE	Maximum Considered Earthquake
METS	Office of Materials Engineering and Testing Services (Caltrans HQ)
MHHW	Mean Highest High Water
MIS	Major Investment Study
mm	Millimeter
MOA	Memorandum of Agreement
MOU	Memorandum of Understanding
MOW	Maintenance of Way
MP	Mile Post
MPH/mph	Miles per hour (use mph)
MPO	Metropolitan Planning Organizations
MSA	Management Systems Activities
MTD	Memo to Designers
MTMC	Military Traffic Management Command (Federal)
MW	Messenger Wire

N

NAAQS	National Ambient Air Quality Standards
NAC	Noise Abatement Criteria
NB	Northbound (use in tables and figures only)
NBSSR	Noise Barrier Scope Summary Report
NCTD	North County Transit District
ND	Negative Declaration (CEQA)
NEPA	National Environmental Policy Act (Federal)
NEHRP	National Earthquake Hazards Reduction Program
NESC	National Electric Safety Code
NF	Negative Feeder
NFPA	National Fire Protection Association
NGA	Next Generation of Attenuation
NH	National Highway System Program (Federal)
NHI	National Highway Institute

NHS	National Highway System
NIST	National Institute of Standards and Technology
NOD	Notice of Determination (CEQA)
NOI	Notice of Intent (NEPA)
NOP	Notice of Preparation (CEQA)
NPDES	National Pollutant Discharge Elimination System
NPRM	Notice of Proposed Rule Making

O

OA	Obligation Authority (Federal)
OC	Overcrossing
OCS	Overhead Contact System
OCTA	Orange County Transportation Authority
OHC	Other Highway Construction Program (State)
OJT	On-the-Job Training
OLPPD	Office of Local Programs, Procedures Development
OOE	Office of Office Engineer, of the DES (Caltrans HQ)
OPL	Operability Performance Level
OPR	Office of Planning and Research (State)
OSD	Office of Structure Design, of the ESC (Caltrans HQ)
OSF	Office of Structure Foundations, of the ESC (Caltrans HQ)
OSHA	Occupational Safety and Health Administration
OSM&I	Office of Structures Maintenance and Investigations (Caltrans HQ)
O&M	Operations and Maintenance

P

PAR (obsolete)	Project Approval Report (obsolete); Project Authorization Request
PC	Personal Computer
PCC	Portland Cement Concrete
PCR	Project Change Request
PCPT	Piezocone Penetrometer Test
PCJPB	Peninsula Corridor Joint Powers Board
PD	Project Development
PDDM	FHWA Project Development and Design Manual
PDF	Personal Document File
PDPM	Caltrans Project Development Procedures Manual
PDT	Project Development Team
DU	Design Unit
PDWTM	Project Development Workflow Tasks Manual
PE	Project Engineer
PEE	Preliminary Environmental Evaluation
PEER	Pacific Earthquake Engineer Research Center
PEIR	Programmatic Environmental Impact Report
PFDHA	Probabilistic Fault Displacement Hazard Analysis
PG&E	Pacific Gas and Electric Company
PHF	Project History File
PID	Project Initiation Document
PIR	Project Information Report
PISA	Project Information Systems and Analysis
PM	Project Manager; Program Manager

PMCS	Project Management Control System
PMP	Project Management Division (Caltrans HQ)
PMPM	Project Management Procedures Manual
PMS	Pavement Management System
PMT	Program Management Team
PPNO	Planning Program Number
P & PPR	Permit and Port Planning Regulations
PR	Project Report
PS	Paralleling Station (with Autotransformer)
PS&E	Plans, Specifications, and Estimate
PSHA	Probabilistic Seismic Hazard Assessment
psig	Pounds per Square Inch Gauge
PSP	Product Safety Plan
PSR	Project Study Report
PSSR	Project Scope Summary Report
PSTIP	Proposed State Transportation Improvement Program
PTZ	Pan-Tilt-Zoom
PUC	Public Utilities Commission (State)
PUMS	PYPSCAN Unit II Monitoring System
PVC	Polyvinyl Chloride
PY	Person Year
PYPSCAN	Person Year and Project Schedule and Cost Analysis

Q

QL	Quality Level

R

RAD	Remedial Action Design
RAP	Relocation Assistance Program; Remedial Action Plan
RAS	Rehabilitation and Safety Program (State)
RC	Regional Consultant
RCE	Registered Civil Engineer
RCR	Route Concept Report
RCTC	Riverside County Transportation Commission
RE	Resident Engineer
RFP	Request For Proposal
RFQ	Request For Qualifications
RI	Remedial Investigation
RICS	Remote Irrigation Control System
RIS	Relinquishment Information Sheet
RM	Regional Manager
ROD	Record of Decision (NEPA)
RON	Resolution of Necessity
ROW	Right-of-Way (use only in tables)
ROWM	Right-of-Way Manual
RPA	Rule of Particular Applicability
RR	Railroad
RRR	Resurfacing, Restoration, Rehabilitation (3R)
RRRR	Resurfacing, Restoration, Rehabilitation, Reconstruction (4R)
RSTP	Regional Surface Transportation Program (Federal)
RTIP	Regional Transportation Improvement Program

RTL	Ready to List
RTP	Regional Transportation Plan
RTPA	Regional Transportation Planning Agency
RTRI	Railway Technical Research Institute
RU	Responsible Unit
R/W	Right of Way (not in environmental documents)
RWQCB	Regional Water Quality Control Board (State)

S

SAM	State Administrative Manual
SAVE	Society of American Value Engineers
SB	Southbound (tables and figures only)
SCE	Southern California Edison (Electric Company)
SCR	Senate Concurrent Resolution
SCADA	Supervisory Control and Data Acquisition
SCPE	Seismic Capacity and Performance Evaluation
SCRRA	Southern California Regional Rail Authority
SDB	System Duct Bank
SDC	Seismic Design Criteria
SDG&E	San Diego Gas and Electric Company
SDNR	San Diego Northern Railroad
SDOF	Single Degree of Freedom
SDR	Site Damage Report
SEE	Safety Evaluation Earthquake
SER	Standard Environmental Reference
SFPC	Special Funded Project Coordinator
SFY	State Fiscal Year
S&H Code	Streets and Highways Code (State)
SHA	Seismic Hazards Analysis
SHELL	State Highway Extra Legal Load
SHOPP	State Highway Operation and Protection Program (formerly HSOPP)
SHPO	State Historic Preservation Officer (State)
SHS	State Highway System
S&I	Service and Inspection
SI	Site Investigation; Safety Index
SIP	State Implementation Plan
SJRRA	San Joaquin Regional Rail Authority
SLC	State Lands Commission (State)
SLTPP	State/Local Transportation Partnership Program (State)
SMARA	Surface Mining and Reclamation Act (State)
SPL	Safety Performance Level
SPT	Standard Penetration Test
SR	Senate Resolution
SRRA	Safety Roadside Rest Area
SRSS	Square Root of Sum of Squares
SRTP	Short Range Transit Plan
SSC	Seismic Safety Commission
SSI	Soil Structure Interaction
SSP	System Safety Plan
SST	Traction Power Supply Station (with HV Utility Supply)
STA	Stationing
STIP	State Transportation Improvement Program

STP	Surface Transportation Program (Federal – formerly FAU or FAS)
STRAIN	Structures Replacement And Improvement Needs
SVRT	Silicon Valley Rapid Transit
SWPPP	Stormwater Pollution Prevention Plan
SWS	Switching Station (with Autotransformer)

T

TASAS	Traffic Accident Surveillance Analysis System
TAV	Pendolino/Treno Alta Velocità
TBM	Tunnel Boring Machine
TCI	Transit Capital Improvement Program (State)
TCS	Transportation Corridor Study
TEA	Transportation Enhancement Activities Program (Federal)
TESC	Temporary Erosion and Settlement Control
TGV	Train à Grande Vitesse
THSR	Taiwan High Speed Rail
TI	Traffic Index
TIP	Transportation Improvement Program
TGV	Train à Grande Vitesse
TM	Technical Memorandum
TMP	Transportation Management Plan
TOD	Transit Oriented Development
TPC	Train Performance Calculator
TPSS	Traction Power Supply Station
TRAMS	Transportation Accounting Management System
TRB	Transportation Research Board
TSDP	Transportation System Development Program
TSI	Technical Specifications Interoperability
TSIP	Transportation System Information Program (Caltrans HQ)
TSM	Traffic Systems Management
TSMP	Traffic Systems Management Plan
TTY	Teletypewriter
TVM	Ticket Vending Machine

U

UBC	Universal Building Code
UC	Undercrossing
UFC	Uniform Fire Code
UIC	Union Internationales des Chemins de fer (International Union of Railways
UNPAR	Un-Project Authorization Request
UPRR	Union Pacific Railroad
UrEDAS	Urgent Earthquake Detection and Alarm System
URR	Urban Rail Transit Program (State)
UPS	Uninterruptible Power Supply System USC United States Code (Federal)
USCE	United States (Army) Corps of Engineers
USCG	United States Coast Guard
USCS	United Soil Classification System
USGS	United States Geologic Survey (Federal)

V

VA	Value Analysis
VE	Value Engineering
VHS	Very High Speed
VST	Vane Shear Test

W

WASHTO	Western Association of State Highway Transportation Officials
WB	Westbound (tables and figures only)
WBE	Women's Business Enterprise
WBS	Work Breakdown Structure
WMATA	Washington Metropolitan Area Transit Authority

Sources Used

California High-Speed Rail Authority. 2008. *Design Terms and Acronyms Technical Memorandum.* September 2008.

U.S. Forest Service. 1995. *Landscape Aesthetics: A Handbook for Scenery Management*. U.S. Forest Service, Agricultural Handbook No. 701, Glossary-6.

www.155.217.58.58/cgi-bin/atdl.dll/fm/3-34.343/gloss.htm

www.apta.com/research/stats/rail/definitions.cfm

www.bpa.gov/Corporate/KCC/defn/defnsmal/fgh.htm

www.bpa.gov/Corporate/KCC/defn/defnsmal/no.htm

www.ca.blm.gov/GoldenQueen/pub-glos.htm

http://ceg.eh.doe.gov/nepa/regs/ceq/toc_ceq.htm

www.cogsci.princeton.edu/cgi-bin/webwn

www.cogsci.princeton.edu/cgi-bin/webwn or www.windmill.co.uk/glossary.html

www.courtinfo.ca.gov/selfhelp/ glossary.htm#E

www.dot.ca.gov/ser/glossary.htm

www.envisionutah.org/glossary.htm

http://www.epa.gov/owow/wetlands/pdf/40cfrPart230.pdf

www.faa.gov/arp/app600/5054a/5054a1.htm

www.fao.org/docrep/V8350E/v8350e0f.htm

www.fcit.coedu.usf.edu/network/glossary.htm

www.geology.er.usgs.gov/paleo/glossary.shtml

www.grc.nasa.gov/WWW/pbrf/glossary.htm

www.inventors.about.com/library/inventors/blrailroad6.htm

www.members.tripod.com/AMRZ_Home/Glossary.html

www.Merriam-Webster

www.mortgage-rates-mortgage-rates.net/ glossary.htm

www.ncat.org/neaap/resources/glossary.htm

www.octa.net/center/intro/def.asp

www.projectauditors.com/Dictionary/C.html

www.techfest.com/networking/cabling/cableglos.htm

www.tfcbooks.com/mainpage/glossary.htm

www.transweb.sjsu.edu/comglos.htm.

www.ucop.edu/facil/pd/CEQA-Handbook/glossary.html

www.wave-guide.org/library/glossary.html

www.wrh.noaa.gov/Phoenix/general/glossary

APPENDIX I

QUALITY CONTROL PLAN (REVISED 2010)

AVAILABLE ON THE CALIFORNIA HIGH-SPEED RAIL AUTHORITY WEBSITE:
http://www.cahighspeedrail.ca.gov/library.aspx

QUALITY PLAN

for the

CALIFORNIA HIGH-SPEED TRAIN PROJECT PROGRAM MANAGEMENT TEAM

Prepared by: _____ Date: 3/10/10
S. Aileen Read
PMT QA/QC Manager

Reviewed by: _____ Date: 3/10/10
Anthony Daniels
PMT Program Director

QUALITY PLAN

for the

CALIFORNIA HIGH-SPEED TRAIN PROJECT PROGRAM MANAGEMENT TEAM

REVISIONS

Modification to this Quality Plan will be made as necessary to conform to evolving project needs. As major revisions occur, the entire manual will be redistributed. For minor revisions, only the affected pages will be reissued.

Revision No.	Date	Section(s)	Description
0	3/26/07	All	Original issue
1	3/10/10	All	Updated per FTA req'ts & FY10 activities

TABLE OF CONTENTS

Section	Description	Revision	Effective Date
0	Introduction	1	3/10/10
1	Management Responsibility	1	3/10/10
2	Documented Quality Management System	1	3/10/10
3	Design Control	1	3/10/10
4	Document Control	1	3/10/10
5	Purchasing	1	3/10/10
6	Product Identification and Traceability	1	3/10/10
7	Process Control	1	3/10/10
8	Inspection and Testing	1	3/10/10
9	Inspection, Measuring and Test Equipment	1	3/10/10
10	Inspection and Test Status	1	3/10/10
11	Nonconformance	1	3/10/10
12	Corrective Action	1	3/10/10
13	Quality Records	1	3/10/10
14	Quality Audits	1	3/10/10
15	Training	1	3/10/10

LIST OF FIGURES

Figure 0-1 – Project Map
Figure 1-1 – California High-Speed Rail Authority Organization Structure
Figure 1-2 – Program Management Team Organization

APPENDIX A – PROGRAM MANAGEMENT TEAM QUALITY PROCEDURES

Procedure	Description	Revision	Effective Date
QP 2.01	PMT Quality Plan	1	3/10/10
QP 3.01	Data Collection and Field Investigation	1	3/10/10
QP 3.02	Environmental Methodologies, Technical Memoranda, and Design Criteria	1	3/10/10
QP 3.03	Design Calculations	1	3/10/10
QP 3.04	Standard and Directive Drawings	1	3/10/10
QP 3.05	Standard Specifications	1	3/10/10
QP 3.06	Procurement Specifications	1	3/10/10
QP 3.07	Petition for a Proposed Rule of Particular Applicability	1	3/10/10
QP 3.08	Capital Cost Estimates	1	3/10/10
QP 3.09	Design Interface Management	1	3/10/10
QP 3.10	Section Reviews	1	3/10/10
QP 3.11	External Reviews	1	3/10/10

Procedure	Description	Revision	Effective Date
QP 9.01	Equipment Calibration and Maintenance	1	3/10/10
QP 12.01	Nonconformance Reports and Corrective Actions	1	3/10/10
QP 12.02	Observations and Preventive Actions	1	3/10/10
QP 14.01	Regional Consultants Quality Plan Evaluation	1	3/10/10
QP 14.02	PMT Internal Quality Audits	1	3/10/10
QP 14.03	Quality Surveillance Audits of Regional Consultants	1	3/10/10
QP 15.01	Quality System Training	1	3/10/10
QP 15.02	Auditor Qualification	1	3/10/10

0 INTRODUCTION

0.1 Quality Policy

This Quality Plan has been prepared to establish a quality program for the California High-Speed Train Project (CHSTP) and outlines the Quality Assurance/Quality Control (QA/QC) requirements for the California High-Speed Rail Authority's Program Management Team.

The purpose of this Quality Plan is to define the minimum requirements for individual and team performance on the project, and to both direct and commit the Program Management Team (PMT) to deliver products that fully meet the project requirements established by the California High-Speed Rail Authority as the sponsoring agency. Each member of the Program Management Team staff assigned to the project is responsible for understanding the roles and responsibilities as defined in this plan, and to develop the work products consistent with the requirements outlined herein.

This Quality Plan is a companion document to the Project Management Plan (PMP), which describes the PMT management organizational structure and approach for the project.

0.2 Project Background

Planning for a statewide high-speed rail line began in earnest in 1993, when the California State Legislature established the Intercity High-Speed Rail Commission to investigate the feasibility of high-speed rail for California. The Commission conducted a feasibility study for a high-speed passenger rail corridor between Los Angeles and Bakersfield through the Tehachapi Mountains. This initial feasibility study formed the basis for a statewide corridor evaluation and environmental constraints analysis, which led to the 1996 finding that a high-speed rail system is technically, environmentally, and economically feasible in California.

In 1996, the California High-Speed Rail Authority (Authority) was established to secure financing and to oversee the planning, design, construction and operation of a statewide network that would help sustain the state's long-term mobility and economic growth. Later that year, the Authority adopted a 20-year plan for the California high-speed rail system.

By 2000, the Authority had developed investment-grade forecasts of ridership, revenue and cost, and quantified the benefits of the high-speed line embodied in its first business plan. In 2002, the state Legislature passed and Governor Gray Davis signed Senate Bill 1856, authorizing a $9.95 billion dollar bond issue to finance a high-speed train system in California. However, submission of the measure to the state's voters was delayed by several years by the Legislature as part of the state's budget process.

In 2004, the Authority began the programmatic environmental review process together with its federal partner, U.S. Department of Transportation's Federal Railroad Administration (FRA). In November 2005 the Program Environmental Impact Report/Environmental Impact Statement (EIR/EIS) was certified, finding that the high-

speed train alternative would have substantially fewer impacts than other transportation (highway/air) alternatives at considerably less cost. The preferred corridors and station locations were established for the majority of the line; however, the specific route between the San Francisco Bay Area and the Central Valley was left to be settled in a follow-on program-level EIR /S, which was certified in 2008.

In late 2006 the Authority began project level EIR/S work to finalize the routing and station requirements at a 15% design level, and to determine impacts and mitigations. The Authority hired the PB Team to be the Program Manager, and subsequently engaged five Regional Consultant teams to conduct the work on portions of the corridor.

In 2007 the Authority prepared a phasing and financial plan. Phase 1 would run from San Francisco to Anaheim through the Central Valley, with sections to Sacramento and to San Diego to follow. The financial plan envisaged funding the capital cost from a roughly equal mix of State, Federal, and private funds.

In 2008 the state Legislature approved and Governor Arnold Schwarzenegger signed Assembly Bill 3034, which revised Senate Bill 1856 of 2002. The $9.95 billion dollar bond measure, $9 billion of which was targeted as partial funding of a high-speed rail system, was placed on the November 2008 ballot and was approved by the voters. By the end of the year, three additional Regional consultant teams were engaged to conduct work on the remaining portions of the corridor.

In 2009, newly-elected US President Barack Obama included $8 billion in funding within the American Recovery and Reinvestment Act (ARRA) to be directed to high-speed train projects throughout the country; the state of California received $2.25 billion of these funds for the high-speed train project. Guidance for the ARRA funding sets a deadline of September 2012 to obligate the federal monies, meaning go to construction.

The path forward to initial revenue passenger service can be divided into three major milestones: planning (preliminary engineering and environmental documentation), implementation (final design and construction), and revenue service. Currently the projected timeframes for each of these milestones are as follows:

- Planning: begin completion of environmental reviews in 2011 for the Phase 1 sections, and complete the environmental reviews for all sections by 2013
- Implementation: begin final design in 2011; begin construction in 2012
- Revenue Service: begin opening sections for passenger service in 2017 or sooner, and for the Phase 1 system from Anaheim to San Francisco by 2020.

0.3 Project Description

The proposed California high-speed train system encompasses more than 800 route miles and will provide intercity travel in California between the major metropolitan centers of Sacramento, the San Francisco Bay Area, the Central Valley, Los Angeles, the Inland Empire, Orange County, and San Diego. The system is envisioned as a state-of-the-art, electrically-powered, high-speed, steel-wheel-on-steel-rail technology, including state-of-the-art safety, signaling, and automated train-control systems. This train technology has proven to be the safest and most reliable form of transportation known, based on extensive revenue operating experience in Europe and Asia.

The California high-speed train will be capable of operating speeds up to 220 mph and designed for an ultimate speed of 250 mph on a fully grade-separated alignment with an expected trip time from San Francisco to Los Angeles of under two hours and forty minutes. Interconnection with other modes of transportation (commercial airports, mass transit, and the highway network) is provided as part of the system. The system will be capable of operating many patterns of service. The current system ridership forecast is 102.4 million passengers and 340 trains in 2035.

The California high-speed train will operate primarily on exclusive track with portions of the route shared with other passenger rail operation in the Caltrain Corridor in the San Francisco Bay area. The route will be constructed at-grade, in an open trench, in a tunnel, or on an elevated guideway, depending on the terrain and physical constraints encountered. Extensive portions of the system will lie within, or adjacent to, existing rail or highway right-of-way (rather than new alignment) to reduce potential environmental impacts and minimize land acquisition.

Due to the unique design characteristics and the size of the undertaking, the CHSTP has been divided into eight regional sections to allow for more effective program management. (Refer to **Figure 0-1** for the corridor sections and potential station locations.)

Currently, the Authority's Program Management Team and Regional Consultants are preparing joint regional project EIR/EIS documents in compliance with both the California Environmental Quality Act (CEQA) and the National Environmental Policy Act (NEPA). The Authority is the state lead agency for the purposes of compliance with CEQA and the Federal Railroad Administration (FRA) is the lead federal agency for the purpose of compliance with NEPA. Upon receipt of the NOD and ROD for a given regional section, permitting activities, right-of-way negotiations, land acquisition, final design, and construction for that section can begin.

Figure 0-1 – CHSTP Map

0.4 Quality Plan Scope and Development

The table below identifies the 15 quality elements and their applicability to each phase of the project. Each of these quality elements, and the applicability to the Program Management Team Scope of Services, is discussed in subsequent sections of this Quality Plan.

Quality Element	**Planning Phase**	**Implementation Phase**
1. Management Responsibility	X	X
2. Documented Quality Management System	X	X
3. Design Control	X	X
4. Document Control	X	X
5. Purchasing	X	X
6. Product Identification and Traceability		X
7. Process Control	X	X
8. Inspection and Testing		X
9. Inspection, Measuring, and Test Equipment		X
10. Inspection and Test Status		X
11. Nonconformance	X	X
12. Corrective Action	X	X
13. Quality Records	X	X
14. Quality Audits	X	X
15. Training	X	X

This current version of the Quality Plan addresses the overall framework for the project quality management system and the QA/QC requirements for the planning phase (preliminary engineering and environmental documentation) of the project. The Quality Plan will be reviewed and updated on an annual basis to address the QA/QC requirements for the upcoming year.

1 MANAGEMENT RESPONSIBILITY

1.1 Purpose and Scope

This section establishes the responsibilities for planning and implementing quality activities to ensure that the implementation of the Quality Plan is adequate to meet the goals, expectations, and requirements of the project.

1.2 Responsibilities

1.2.1 California High Speed Rail Authority (Authority)

Established in 1996, California High Speed Rail Authority is the state entity responsible for planning, implementation, and operation of a high-speed rail system serving California's major metropolitan areas.

Per state law, the Authority is governed by a nine-member policy board; five members are appointed by the governor, two members are appointed by the state Senate Rules Committee, and two members are appointed by the speaker of the state Assembly.

The Authority is currently staffed by a small number of state employees to oversee the effort, and contractors are being relied upon to fill many key functions. As the project progresses – particularly as it nears completion of the planning phase and enters into final design and construction - it is anticipated that the Authority's staff will be augmented substantially to ensure accountability, transparency, and decision-making in the public's best interest. **Figure 1-1** depicts the Authority's current staff organization structure.

1.2.2 Other Stakeholders

Other project stakeholders include the Federal Railroad Administration (FRA), the Environmental Protection Agency (EPA), Unites States Army Corps of Engineers (USACOE), and various railroads, cities and counties along the CHSTP corridor.

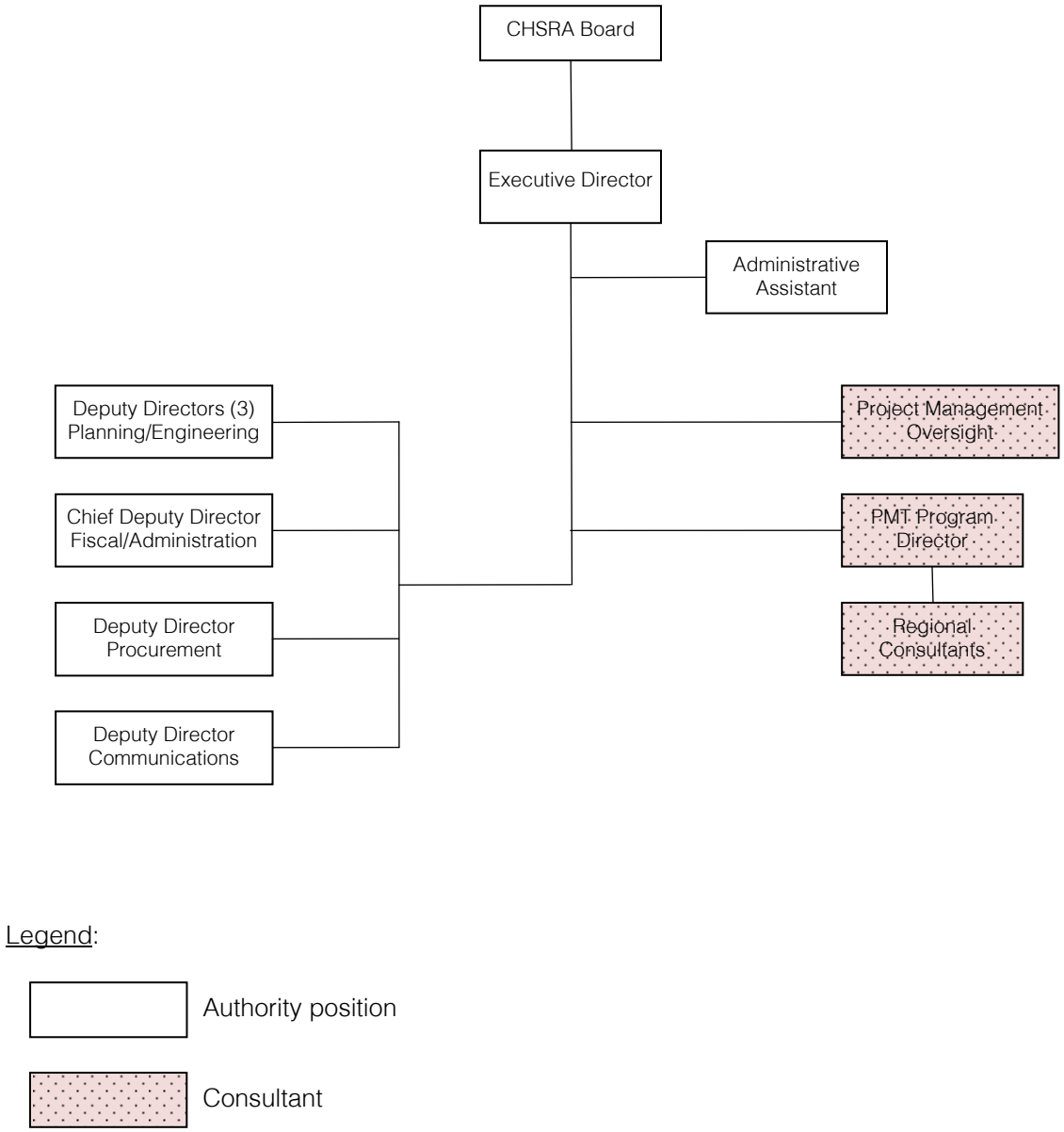

Figure 1-1 – California High-Speed Rail Authority Organization

1.2.3 Program Management Team (PMT)

The Program Management Team (PMT), led by PB, is providing day-to-day management of the program, working closely with the Authority staff and directing the work of other consultants.

The PMT is responsible for taking the program from environmental assessment through preliminary engineering into procurement. The PMT will then follow the project into final design and construction, testing and commissioning, start-up, and revenue service.

The current PMT organization is shown in **Figure 1-2**. The primary roles and responsibilities of the PMT Organization are briefly described below:

Role	**Responsibilities**
Program Director	Reports to the Authority's Director/Chief Executive Officer and is responsible for the day-to-day coordination and integration functions required to ensure the achievement of the overall CHSTP objectives. The Program Director has overall responsibility for all aspects of the PMT activities including.
Deputy Director	Reports to the Program Director and oversees the activities of the Regional Managers and Regional Consultants. The Deputy Director fills in for the Program Director in his absence.
Regional Managers	Report to the Deputy Director and direct the project-level environmental process and preliminary engineering by the Regional Consultants for their sections. The Regional Managers will manage procurement, construction management, testing, commissioning and revenue start-up activities within their sections once this aspect of the program commences.
Environmental Program Manager	Reports to the Program Director and is responsible for directing and guiding the Regional Consultants in preparation of the environmental studies and subsequent environmental approvals required for implementing the CHSTP.
Engineering Manager	Reports to the Program Director and is responsible for development of project-specific standards and oversight of Regional Consultant activities to ensure compliance with the standards and overarching CHSTP objectives.
Subsystem Managers	Report to the Engineering Manager and are responsible for the establishment of engineering standards and protocols for their particular subsystem. Subsystem Managers also review technical submittals prepared by the Regional Consultants for compliance and consistency with Project requirements, subsystem standards and performance objectives.
Operations Manager	Reports to the Program Director and is responsible for putting the controls in place to ensure that policy decisions and project objectives are carried out in a systematic fashion across all business lines to ensure consistency throughout the CHSTP teams.

Role	Responsibilities
Staging/Procurement Manager	Reports to the Program Director and is responsible for developing the strategies and methodologies for staging of construction and procurement for the CHSTP, in the context of anticipated funding, geographic challenges and other variables that could impact the CHSTP.
Railroad Operations Manager	Reports to the Program Director and is responsible for defining the purpose and need and establishing the viewpoint or perspective of the Operator of the high-speed rail system that will provide a specific set of operating objectives and parameters.
Quality Assurance/ Quality Control (QA/QC) Manager	Reports to the Program Director and is responsible for leading the development of a Program Quality Assurance Plan, reviewing Regional Consultants' Quality Assurance Plans, conducting internal quality assurance audits of PMT activities, and performing surveillance audits of Regional Consultant activities.

The work of the PMT includes:

- Development of project controls – establishment of the systems necessary to maintain control of the schedule, budget, documentation, procurement, construction contracting strategies, etc. so that project delivery tracks the established schedule and financial targets
- Environmental management – establishment of environmental methodologies to guide and direct the environmental process; statewide environmental resource agency coordination to ensure that the technical review requirements of the approval agencies will be met in the environmental review process and subsequent applications; and review of the technical studies and EIR/EIS documents to confirm that the guidance and standard methods adopted by the Authority and FRA are followed
- Engineering – establishment of the technical requirements to ensure that the system provides the performance mandated by guiding legislation; establishment of the safety requirements, which will be embodied in the Rule of Particular Applicability (RPA) and are critical to securing FRA and California Public Utilities Commission (CPUC) certification to operate the system; and review of the Regional Consultants' engineering documents to confirm that the requirements are being followed. Engineering efforts are focused on five key areas:
    - System-wide design elements: a network-wide 2x25 kV traction power supply system; standard designs for trackwork and overhead contact system; train control and communications systems specifications
    - Design criteria and standards: development of technical memoranda and directive drawings to guide the preliminary engineering of the Regional Consultants; development of design criteria to be embodied in the CHSTP Design Manual as the primary design reference for final design and

construction; and development of standard specifications and special provisions for inclusion in the procurement documents

  - Maintenance Plan: program-wide concept plans for use in defining facilities requirements for maintenance of rolling stock and infrastructure, including general locations, size, equipment requirements and activities of each facility
  - Operational Planning and Concept of Operations: operational planning support to make regional project recommendations to optimize system performance; operational concepts, including operational objectives, mainline configuration, control of operations, rolling stock maintenance and repair; and operational design criteria
  - Rolling Stock: rolling stock specifications to support procurement and acceptance of trainsets that meet Authority performance and safety requirements
- Outreach – supporting the Authority with outreach to government agencies, stakeholders, the news media and the public at the statewide level, to provide transparency and accountability and to effectively engage the public
- Procurement – development of a contract packaging plan section-by-section and system-wide; development of a procurement plan; and development of legal, commercial and technical elements for bid documents, bid advertisement, bid evaluation, contractor selection, contract award, contract administration, and close-out
- Construction Management – oversight and support of the Regional Construction Managers to ensure that a program-wide perspective is maintained for on-time delivery of revenue service; management of the contractor for the core systems (trainsets, heavy maintenance facility, train control/signaling and communications systems, central control center, electrification/traction power systems, and track), and development of the testing and commissioning program
- Right-of-Way Preservation and Acquisition – support the Authority with identification of "at-risk" parcels, preparation of survey documents and legal descriptions, and preparation of property acquisition negotiations
- Scheduling – development and maintenance of a CHSTP Master Schedule, detailing the activities required to implement the CHSTP. The schedule will include established milestones for Notice of Determination and Record of Decision for each section and planned design, construction, testing, commissioning, and start-up activities in each section and project-wide.

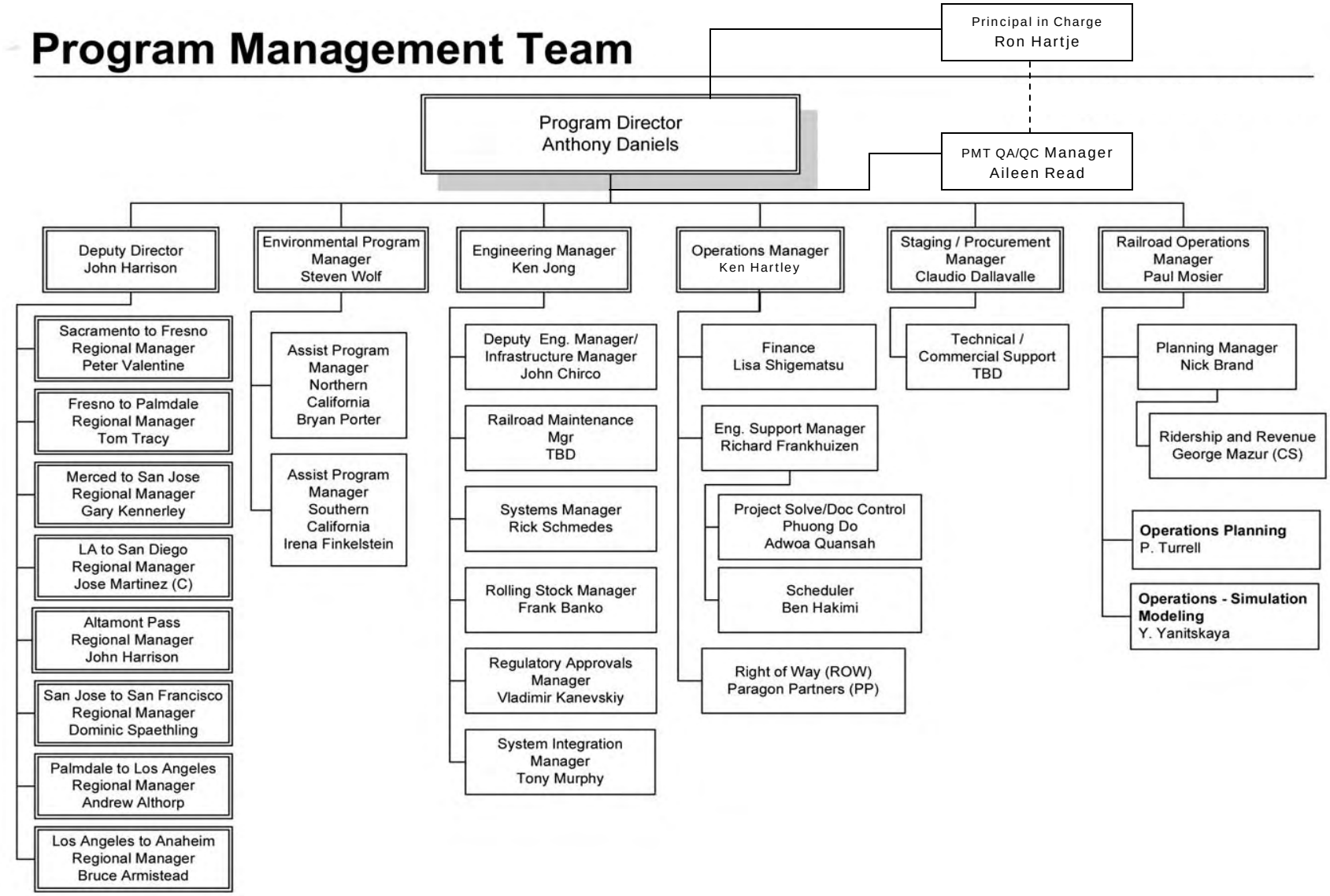

Figure 1-2 - Program Management Team Organization

Electronic documents, once printed, are uncontrolled and may become outdated.
Refer to the electronic document on the project website for the current version.

1.2.4 Regional Consultants

Each Regional Consultant is responsible for developing engineering (15% and 30% levels of completion), planning, and environmental data; for preparing one or more project site-specific Environmental Impact Report/Environmental Impact Statement (EIR/EIS) for the high-speed train system in their respective section of the corridor; and for providing the described right-of-way preservation and acquisition services in their respective section of the corridor, as requested by the Authority. The project EIR/EIS will include engineering and environmental impact analysis of the high-speed train line and facilities, including station development and connections with other modes of transportation. EIR/EIS activities will include the involvement of the public, interested groups, and appropriate local, state and federal agencies, as determined in consultation with Authority staff.

1.3 Policy and Implementation

The requirements for performance, safety and reliability within the project demand that systematic, consistent, and authoritative controls be implemented to ensure that the CHSTP is designed, procured, manufactured, constructed, installed, inspected, tested, and accepted in accordance with established procedures.

A primary objective of this Quality Plan is the early identification of conditions that may affect the CHSTP's ability to perform satisfactorily, and for providing timely corrective action that corrects unsatisfactory performance and precludes repetition of the noted discrepancies.

The controls necessary to preserve the integrity of the quality considerations outlined and the documentation of the quality results are categorized into three general areas of quality activity:

- Establishment of quality requirements in the form of environmental methodologies, technical memoranda and directive drawings, design criteria, standard drawings and specifications, Rule of Particular Applicability, and procurement specifications
- Review of the work of others for compliance with the quality requirements
- Audits of Quality Plan implementation for compliance with established policies and procedures

The PMT Program Director will communicate the project and quality objectives, as well as provide management and technical direction to the PMT members.

The PMT QA/QC Manager will perform audits of PMT for compliance with the requirements and procedures established in this Quality Plan. In addition, the PMT QA/QC Manager will perform surveillance audits of the Regional Consultants and other design consultants, construction managers, and construction contractors, for compliance with the procedures established in their respective Quality Plans.

2 DOCUMENTED QUALITY MANAGEMENT SYSTEM

2.1 Purpose and Scope

This section establishes the policy for the implementation and maintenance of a quality system to ensure that the products or services comply with the goals, expectations, and requirements of the CHSTP.

2.2 Responsibilities

The **Authority's Chief Executive Officer** (CEO) ultimately has responsibility for the successful implementation of the CHSTP. The CEO has delegated the responsibility for day-to-day engineering design management to the PMT Program Director

The **PMT Program Director** reports directly to the Authority's CEO and is responsible for communicating the project and quality objectives, providing management and technical direction to the PMT, and developing and maintaining the QA/QC Program, including:

- Establishing procedures and practices that define the PMT's requirements to affect adequate levels of quality in the work products
- Implementing project procedures for quality control
- Orienting new PMT members to Quality Plan requirements and their role in the production of quality documents
- Identifying special training needs of individual PMT members as it relates to the production of quality documents, and allocating time for the needed training to occur
- Initiating actions to communicate and improve the quality of deliverables and services
- Reviewing this Quality Plan and any revisions

The **PMT QA/QC Manager** is responsible for the maintenance and execution of this Quality Plan to meet Federal Transit Administration (FTA) requirements, as well as oversight and audit of all quality control functions. The PMT QA/QC Manager has independent authority to monitor, audit, and evaluate all project activities affecting quality to ensure that the full intent of the project requirements is met, and will regularly report on the status and adequacy of the project's quality assurance and quality control (QA/QC) program to the PMT Program Director. Specific responsibilities include:

- Reviewing and Regional Consultants' Project QA/QC Plans to ensure that they meet the requirements of the Authority and the FTA
- Providing quality assurance oversight and monitoring for compliance of project engineering, procurements, construction, inspection and testing activities with this Quality Plan
- Ensuring follow-up and solutions to quality problems, as identified, through management of the corrective action system
- Ensuring that quality activities are conducted as planned
- Participating in the evaluation and disposition of nonconformances, deviations, and waivers involving the potential changes to design and quality requirements

- Ensuring that quality audits of project and management activities that have an effect or potential effect on project quality are planned, scheduled, and performed as defined in this Quality Plan
- Reporting on the implementation and effectiveness of the quality management system to senior management
- Preparing and distributing revisions to this Quality Plan

The **Regional Managers** are responsible for the oversight and review of the work performance and deliverables of the Regional Consultants, including:

- Serving as the key point of contact for the Regional Consultant's Project Manager.
- Facilitating consistency of design and consolidation for the complete project.
- Overseeing that interfaces with the other regions are consistent with the overall objectives of unifying the design statewide.
- Overseeing Regional Consultant activities, with a particular focus on discipline interfaces between project sections to ensure consistency within the geographic segment, as well as with overarching Program Goals.
- Overseeing Regional Consultant compliance with project procedures and protocols.
- Facilitating an overall review of Regional Consultant documents, drawings, and other submittals by routing to the correct technical support.

The **Regional Consultant Project Managers** are responsible for communicating the project and quality objectives, and providing management and technical direction to the Regional Consultant Team, and developing and maintaining the QA/QC Program, including:

- Establishing procedures, practices, and related forms that define the Regional Consultant Team's requirements to affect adequate levels of quality in the contract deliverables
- Implementing project procedures for quality control, including review procedures
- Orienting new Regional Consultant Team members to Quality Plan requirements and their role in the production of quality documents
- Identifying special training needs of individual Regional Consultant Team members as it relates to the production of quality documents, and allocating time for the needed training to occur
- Initiating actions to communicate and improve the quality of deliverables and services
- Participating in reviews of design, contract, and procurement documents to verify that quality characteristics have been considered
- Participating in section reviews and surveillance audits as appropriate

The **Regional Consultant QA/QC Managers** are responsible for the following:

- Reviewing the operations of the Regional Consultant Team to ensure that the prescribed quality control standards, methods, and procedures are being carried out
- Reporting any case of shortfall in the maintenance of quality control to the Regional Consultant Project Manager and recommending preventive and corrective measures

- Identifying the need for specialized Quality Control monitoring
- Scheduling and conducting the training needed by the Regional Consultant Team members to operate within the prescribed QA/QC procedures governing their work
- Reporting on the implementation and effectiveness of the quality management system to senior management.

2.3 Policy and Implementation

The purpose of the CHSTP and its principal objectives are described in the Program Final EIR/EIS, as follows:

> "to provide a reliable mode of travel, which links the major metropolitan areas of the state, and delivers predictable and consistent travel times. A further objective is to provide an interface with commercial airports, mass transit and the highway network and relieve capacity constraints of the existing transportation system as increases in intercity travel demand in California occur, in a manner sensitive to and protective of California's unique natural resources."

The Authority's statutory mandate is to plan, build, and operate a high-speed rail system that is coordinated with the state's existing transportation network, particularly intercity rail and bus lines, commuter rail lines, urban rail transit lines, highways, and airports. The Authority has responded to this mandate by adopting the following objectives and policies for the proposed high-speed rail system.

- Provide intercity travel capacity to supplement critically over-utilized interstate highways and commercial airports.
- Meet future intercity travel demand that will be unmet by present transportation systems and increase capacity for intercity mobility.
- Maximize intermodal transportation opportunities by locating stations to connect with local transit, airports, and highways.
- Improve the intercity travel experience for Californians by providing comfortable, safe, frequent, and reliable high-speed travel.
- Provide a sustainable reduction in travel time between major urban centers.
- Increase the efficiency of the intercity transportation system.
- Preserve environmental quality and protect California's sensitive environmental resources by reducing emissions and vehicle kilometers/vehicle miles traveled for intercity trips.
- Consult with resource and regulatory agencies during the tier 1 environmental review and use all available information for assessing the alternative that is most likely to yield the least damaging practicable alternative by avoiding sensitive natural resources (wetlands, habitat areas, conservation areas) where feasible.
- Maximize the use of existing transportation corridors and rights-of-way, to the extent feasible.
- Develop a practical and economically viable transportation system that can be implemented in phases by 2020, which would generate revenues in excess of operations and maintenance costs.

Written procedures shall be developed for activities affecting quality associated with the project services and products. The range and detail of the procedures shall be dependent upon the complexity of the work, methods, skills, and training required to carry out the activity. This Quality Plan includes the following:

- Management responsibilities, policy, and implementation for each of the 15 quality elements described in FTA's *Quality Assurance & Quality Control Guidelines* (FTA-IT-90-5001.02.1).
- Quality procedures that establish specific standards for QA/QC for PMT activities and/or work products (included in Appendix A). Quality *control* procedures are specifically designed to produce a quality design or product that meets the quality standards set for the CHSTP. Quality *assurance* procedures are specifically designed for the Program Management Team to oversee project activities to confirm that quality control procedures are being implemented and project quality goals are being met.

The work processes and procedures outlined in this Quality Plan are intended to fulfill the global objectives of the PMT, specifically:

- To deliver end products that satisfy the project objectives and requirements
- To continually improve the methods used to deliver the products and services
- To deliver the products and services in a cost-effective manner

The PMT's approach to successfully implement the project is to (a) establish clear lines of communication and responsibility for the successful planning, implementation, and operation of the CHSTP, and (b) satisfy the project's objectives with respect to schedule, cost, quality, and safety.

2.4 Revisions

Revisions to this Quality Plan will be made as necessary to conform to evolving project needs. Revisions to the Quality Plan are prepared by the PMT QA/QC Manager and reviewed by the PMT Program Director.

As major revisions occur, the entire Quality Plan will be reproduced and redistributed. For minor revisions, only the affected sections and/or quality procedures will be reissued. Any revision to the Quality Plan will require a revision number in the revision history section, along with the date and a brief description of the change. Upon receipt of the revised pages, previous versions of the affected pages shall be discarded or marked superseded.

2.5 References

FTA *Quality Assurance & Quality Control Guidelines* (FTA-IT-90-5001.02.1).
QP 2.01 – PMT Quality Plan

3 DESIGN CONTROL

3.1 Purpose and Scope

This section establishes the requirements for quality assurance and quality control (QA/QC) related to design activities to be performed by the PMT. These activities include the following:

- Development of preliminary design guidance (technical memoranda, environmental methodologies, directive drawings), performance and safety criteria (design criteria, standard drawings and specifications, procurement specifications), and programmatic documents (Petition for a Proposed Rule of Particular Applicability, capital cost estimates) that are clearly understood and adequately addressed
- Reviewing design interfaces
- Verifying design activities of PMT and Regional Consultants
- Reviewing design changes

3.2 Responsibilities

The PMT Program Director has overall responsibility for implementation of the QA/QC activities directly performed by the PMT. Similarly, the PMT Program Director has overall responsibility for the implementation of the QA/QC activities performed by the PMT when performing an oversight function of work performed by Regional Consultants.

The PMT QA/QC Manager is responsible for establishing and maintaining quality procedures related to design activities of the PMT.

3.3 Policy and Implementation

Design-related QA/QC measures to be implemented shall be documented in quality procedures that are consistent with this Quality Plan and the guidelines specified in the FTA's *Quality Assurance and Quality Control Guidelines* (FTA-IT-90-5001.02.1). These procedures shall specify the requirements for document preparation, coordination, review, approval, distribution, revision, and change control. Design documents include all design-related output documents prepared by the PMT for the project (e.g., technical memoranda, environmental methodologies, design criteria, drawings, specifications, Petition for a Proposed Rule of Particular Applicability, and capital cost estimates). Each design element (e.g., supporting calculations, exhibits) that is incorporated into a deliverable, and the deliverable as a whole, shall be prepared and reviewed by qualified PMT personnel prior to submittal. In the event that the responsible firm's quality program imposes more stringent requirements, the more stringent requirements shall also apply.

3.4 References

QP 3.01 – Data Collection and Field Investigation

QP 3.02 – Environmental Methodologies, Technical Memoranda, and Design Criteria

QP 3.03 – Design Calculations
QP 3.04 – Standard and Directive Drawings
QP 3.05 – Standard Specifications
QP 3.06 – General and Supplemental Conditions
QP 3.07 – Petition for a Proposed Rule of Particular Applicability
QP 3.08 – Capital Cost Estimates
QP 3.09 – Design Interface Management
QP 3.10 – Section Reviews
QP 3.11 – External Reviews

4 DOCUMENT CONTROL

4.1 Purpose and Scope

This section establishes the requirements for the control of project documents, records, drawings, and data. These controls are necessary to ensure that project participants and organizations shall have access to the latest and current version of each document.

4.2 Responsibilities

The PMT Operations Manager is responsible for making certain that the integrity of the project records is maintained and that documents are stored, retrieved, reproduced, and distributed efficiently and in accordance with the project guidelines. The PMT Operations Manager is also responsible for long-term storage of project documents at project closeout.

4.3 Policy and Implementation

The PMT document control process is described in the PMT *Project Management Plan* (PMP); the process outlines the caretakers for the various types of project documents, the methods used to store and distribute hardcopies and electronic documents, and the methods used to control changes to the documents and to prevent the misuse of obsolete documents.

Project record documents may include, but not be limited to, the following:

- Correspondence
- E-mail
- Contract and subcontracts, including addenda and annual budgets
- Invoices, progress reports, and other administrative reporting documents
- Project Management Plan
- Quality Plan
- Schedules
- Other management reports
- Technical memoranda, design criteria, and environmental methodologies
- Standard and Directive Drawings
- Standard Specifications
- General and Supplemental Conditions
- Rule of Particular Applicability
- Capital Cost Estimates
- Audit Reports and other quality records

4.4 References

PMT *Project Management Plan*, Chapter 4 – Document Control
PB Americas *Business Management System*

- AD 205 – Records Management
- IT 200 – Computer Operating Procedures

5 PURCHASING

5.1 Purpose and Scope

This section establishes the requirements for the documentation of measures for the preparation, review, approval, and control of procurement activities. These measures provide for, as appropriate: source evaluation, objective evidence of quality furnished by the supplier, inspection and/or audit at the source, and evaluation of items upon delivery to verify conformance of products and services to procurement and contract document requirements.

5.2 Responsibilities

The Operations Manager, under the supervision of the Program Director, is responsible for contract administration services related to selection and evaluation of subconsultants.

The Subsystem Managers, under the supervision of the Engineering Manager, are responsible for ensuring that the qualifications and quality control requirements of the contractor/manufacturer/supplier are stipulated in the standard specifications

The Staging/Procurement Manager is responsible for ensuring that the qualifications and quality control of the Contractor are stipulated in the General and Supplemental Conditions.

5.3 Policy and Implementation

PB Americas' *Business Management System*, LD 202 – Management of Subconsultants, describes the requirements and responsibility for qualifications-based selection of subconsultants and quality assurance of work performed by subconsultants.

QP 3.05 – Standard Specifications and QP 3.06 – General and Supplemental Conditions describe the quality requirements and responsibilities for preparing procurement specifications to meet the performance, safety and QA/QC requirements of the CHSTP.

5.4 References

PB Americas *Business Management System*, LD 202 – Management of Subconsultants
QP 3.05 – Standard Specifications
QP 3.06 – General and Supplemental Conditions

6 PRODUCT IDENTIFICATION AND TRACEABILITY

6.1 Purpose and Scope

This section establishes the requirements for ensuring the control of materials, parts, components, equipment, and products, as well as the identification and traceability of these materials to prevent the use of incorrect or defective items. Product identification and traceability also ensures that only correct and acceptable items are used or installed.

6.2 Responsibilities

The various PMT managers (e.g., Operations Manager, Environmental Manager, Engineering Manager, Subsystem Managers, Staging/Procurement Manager) are responsible for the control, identification and traceability of their specific work products.

The PMT Subsystem Managers, under the supervision of the Engineering Manager, are responsible for ensuring that the requirements for product identification and traceability are stipulated in the standard specifications for their subsystem.

The Regional Managers are responsible for making controlled copies (electronic or hardcopy) of current project standards, criteria, and requirements accessible to their respective Regional Consultants.

The PMT Quality Manager is responsible for the control, identification and traceability of this Quality Plan.

6.3 Policy and Implementation

Proper identification and control of material and items through all stages of design, production, handling, storage, shipment, delivery, installation, and test shall be as specifically imposed by contract, specification, and/or other documents. This identification and control shall also be extended to include spare parts. Items shall be identified by positive markings and/or certifications, as well as receipt inspections with segregated storage containing identification data for controlled issue.

Item identification methods shall ensure that traceability is established and maintained in a manner that allows an item to be traced to applicable drawings, specifications, or any other contract document during all stages of production, delivery, and installation or intended use.

Section 4 – Document Control, of the PMP describes the process for controlling distribution of project documents. The quality procedures referenced below describe the requirements for project identification and traceability. QP 3.05 – Technical Specifications describes the quality requirements and responsibilities for preparing procurement specifications to meet the performance, safety and QA/QC requirements of the CHSTP.

Items that have been inspected and confirmed to be discrepant shall be marked and controlled in accordance with Quality Plan Section 11, Nonconformance.

6.4 References

QP 2.01 – PMT Quality Plan
QP 3.02 – Environmental Methodologies, Technical Memoranda, and Design Criteria
QP 3.03 – Design Calculations
QP 3.04 – Standard and Directive Drawings
QP 3.05 – Standard Specifications
QP 3.06 – General and Supplemental Conditions
QP 3.07 – Petition for a Proposed Rule of Particular Applicability
QP 3.08 – Capital Cost Estimates

7 PROCESS CONTROL

7.1 Purpose and Scope

This section establishes the requirements for identification, planning, and conduct of special work processes under the required and applicable controlled conditions.

7.2 Responsibilities

The PMT QA/QC Manager, under the supervision of the PMT Program Director, is responsible for development, maintenance and distribution of quality procedures for PMT activities that affect quality.

The PMT Operations Manager, under the supervision of the PMT Program Director, is responsible for development, maintenance and distribution of work instructions or procedures for project management and controls processes as needed.

If more stringent controls are warranted, the various PMT managers (e.g., Operations Manager, Environmental Manager, Engineering Manager, Subsystem Managers, Staging/Procurement Manager) are responsible for development, maintenance and distribution of work instructions related to the activities or work products for which they are responsible.

The PMT Subsystem Managers, under the supervision of the Engineering Manager, are responsible for ensuring that the requirements for process control are stipulated in the standard specifications for their subsystem.

7.3 Policy and Implementation

Process control includes monitoring of the following:

- Qualification requirements for personnel
- Implementing quality control procedures that define the manner of production, handling and storage, installation, and servicing that affect quality
- Use of suitable production, installation, and servicing equipment
- Providing an appropriate working environment
- Compliance with quality plans, documented procedures, laws, ordinances, and standards
- Monitoring and controlling process parameters and product characteristics
- Providing suitable maintenance and calibration of equipment to ensure continuing process capability

7.4 References

PB Americas *Business Management System*

- AD 200 series (Administration)
- IT 203 – Computer Operating Procedures
- LD 200 series (Legal Department)
- PD 200 series (Project Delivery)

PMT *Project Management Plan* (PMP)
Appendix A – PMT Quality Procedures
QP 3.05 – Standard Specifications

8 INSPECTION AND TESTING

8.1 Purpose and Scope

This section establishes the responsibilities and requirements for inspection and testing programs.

8.2 Responsibilities

The PMT Subsystem Managers, under the supervision of the Engineering Manager, are responsible for ensuring that the requirements for inspection and testing are stipulated in the standard specifications for their subsystem.

8.3 Policy and Implementation

Inspection and testing requirements apply to design, procurement, manufacture, installation, testing, and acceptance of the systems, equipment, and materials associated with the project. Standard specifications shall include requirements for inspection and testing improvements and shall include the following:

- Qualifications for personnel assigned to perform the work
- Description of statistical sampling methods, if applicable
- Identification of inspection hold points where witnessing/inspection by the Authority's Representative is required
- Qualifications of independent testing laboratories, as appropriate
- Documentation requirements

Suppliers and Contractors shall submit written quality control plans for inspection and testing as required by the standard specifications.

8.4 References

QP 3.05 – Standard Specifications

9 INSPECTION, MEASURING, AND TEST EQUIPMENT

9.1 Purpose and Scope

This section establishes the responsibilities and requirements for ensuring that gauges, instruments, and other measuring and test equipment used by Contractors and Suppliers or Independent Test/Inspection Laboratory personnel in the performance of tests, measurements, and inspections are of the range, type, and accuracy required to satisfy the measurement or test tolerance parameters specified.

9.2 Responsibilities

The PMT Subsystem Managers, under the supervision of the Engineering Manager, are responsible for ensuring that the requirements for the measurement or test tolerance parameters are stipulated in the standard specifications for their subsystem.

9.3 Policy and Implementation

Standard specifications shall include requirements for the identification, calibration, and proper maintenance of equipment used for quality control. Records of such activities shall be maintained. Calibration procedures shall contain the following requirements:

- Measuring and test equipment shall be identified; specifically, name, calibration lab, date of last calibration and calibration expiration
- Instruments shall be calibrated using standards traceable to the National Institute of Standards and Technology or National Bureau of Weights and Measures
- Each instrument shall be identified with a calibration sticker indicating the date of the next calibration date
- Records of calibration shall be maintained and made available for review upon request
- The characteristics measured by an instrument found out of calibration shall be re-verified using a calibrated instrument

The Contractor or Supplier shall develop and implement calibration procedures that define the method of calibration, means of identification, and recalibration frequency, and provide for the recall of suspect or damaged measuring and test equipment in order to ensure continued accuracy and inspection.

The Authority's Representative will monitor Contractors' and Suppliers' calibration and control processes of inspection, measuring, and test equipment for compliance with the contract specifications and the Contractors' and Suppliers' approved quality control plans.

9.4 References

QP 3.05 – Standard Specifications
QP 9.01 – Equipment Calibration and Maintenance

10 INSPECTION AND TEST STATUS

10.1 Purpose and Scope

This section establishes the requirements for identification of the status of inspection and test activities, where necessary.

10.2 Responsibilities

The PMT Subsystem Managers, under the supervision of the Engineering Manager, are responsible for ensuring that the requirements for identification of inspection and test status of products are stipulated in the standard specifications for their subsystem.

10.3 Policy and Implementation

Standard specifications shall include requirements for establishment and implementation of appropriate control procedures for testing and inspection, and monitoring the inspection and status for work being performed to ensure that only work, materials, and equipment that passed the required inspections and tests are incorporated into the end products of the project. The procedures shall include the following:

- Method for identification of status, such as tagging, test documentation, or inspection reports
- Corrective actions to take to preclude the use of unsuitable components into the project

The Contractor or Supplier shall satisfy the contract specifications, laws, ordinances, and standards in carrying out this activity. The Contractor or Supplier shall describe the process used in identifying the inspection and test status of work during all activities associated with the project.

The Authority's Representative will review Contractors' and Suppliers' control procedures and records of inspection and test status.

10.4 References

QP 3.05 – Standard Specifications

11 NONCONFORMANCE

11.1 Purpose and Scope

This section establishes the requirements to ensure that designs, materials, parts and components that do not conform to specified requirements are identified, documented, segregated, controlled and dispositioned to prevent inadvertent use or installation; and have positive, proactive corrective action subsequently attached to the discrepancy. A nonconformance may be identified as a result of a deviation in form, fit, function, or lack of proper documentation.

11.2 Responsibilities

The PMT QA/QC Manager is responsible for preparing procedures to control nonconforming PMT work from being provided to the Authority.

The PMT Staging/Procurement Manager is responsible for ensuring that the requirements for controlling nonconforming work are stipulated in the General and Supplemental Conditions.

11.3 Policy and Implementation

All nonconforming items shall be identified, documented, and segregated until disposition. This identification shall be complete and thorough to avoid the use of nonconforming items into the product until the disposition of the material is determined, and shall include the following:

- Nonconforming condition
- Corrective action
- Results of re-inspection after corrective action (if any) has been completed
- Disposition/instructions (i.e., reject, rework, repair, or accept as is)
- Approval of the disposition by the designated quality representative

The identification of a nonconforming item may occur during a field inspection, surveillance inspection/audit, or by review of documentation.

Nonconformances shall be documented by the designated quality representative(s) in the form of a Nonconformance Report (NCR), and listed in an NCR Log and tracking system for status tracking until closure.

The Contractor shall provide procedures to preclude the inadvertent use or installation of nonconforming work or materials into the projects that are part of the project.

The Authority will review and approve the Contractors' procedures and the final disposition of nonconforming work or materials.

11.4 References

QP 3.06 – General and Supplemental Conditions
QP 12.01 – Nonconformance Reports and Corrective Actions

12 CORRECTIVE ACTION

12.1 Purpose and Scope

This section establishes the measures to ensure that the causes for conditions adverse to quality are identified promptly and that effective corrective action is taken to prevent recurrence.

Preventive action shall be initiated as an appropriate proactive action to address an item that has led to corrective actions in the past on this or another project.

12.2 Responsibilities

The PMT QA/QC Manager is responsible for identifying conditions adverse to quality within the PMT organization, determining the cause of the adverse condition, and determining the responsible party(ies) and *corrective* action(s) to prevent recurrence.

Any PMT member may present an issue for consideration to be addressed as a *preventive* action.

The PMT Staging/Procurement Manager is responsible for ensuring that the requirements for corrective action are stipulated in the General and Supplemental Conditions.

12.3 Policy and Implementation

QP 12.01 – Nonconformance Reports and Corrective Actions describes the process for determining the cause of quality-related problems and the corrective action needed to prevent recurrence. Corrective action taken to eliminate the cause of the quality-related problem shall be commensurate with the magnitude of the adverse condition and the potential risk.

Corrective action(s) shall be implemented by the designated responsible party(ies), as applicable, when conditions adverse to quality, such as design errors, procedural deviations, and unacceptable work products, indicate a failure to follow the requirements of the Quality Plan.

QP 12.02 – Observations and Preventive Actions describes the process for taking action to prevent potential problems identified on this or other similar type projects. The action taken shall be commensurate with the magnitude of the adverse condition and the potential risk.

12.4 References

QP 3.06 – General and Supplemental Conditions
QP 12.01 – Nonconformance Reports and Corrective Actions
QP 12.02 – Observations and Preventive Actions

13 QUALITY RECORDS

13.1 Purpose and Scope

This section establishes measures to ensure that quality records are properly identified, collected, stored, indexed, filed, and maintained until final disposition to validate compliance with contractual requirements.

13.2 Responsibilities

The PMT staff is responsible for maintaining control of their respective quality records (electronic or hardcopy) and submitting them to the PMT Document Control Coordinator for filing and retention.

The PMT QA/QC Manager is responsible for verifying compliance per the quality record requirements through audit activities of the Quality Plan implementation.

The PMT Subsystem Managers, under the supervision of the Engineering Manager, are responsible for ensuring that the quality records requirements are stipulated in the standard specifications for their subsystem.

The PMT Staging/Procurement Manager is responsible for ensuring that the quality records requirements are stipulated in the General and Supplemental Conditions.

13.3 Policy and Implementation

Quality records that demonstrate achievement of the required quality and the effective implementation of the quality systems shall be maintained for design, procurement, construction, installation, inspection, test, and operation activities. Quality records shall be stored to preclude damage, loss, or deterioration and shall be retrievable and made available as required.

Quality records include, but are not limited to, the following:

- Check prints
- Reviewed work products
- Inspector’s Daily Reports
- Concrete Pour Cards
- Field Test Records
- Laboratory Test Records
- Certificates of Compliance
- Supplier’s Quality Verification Submittals
- Approved Shop Drawings
- Change Orders
- Project Specifications and Drawings
- As-Built Drawings
- Project Certifications
- Audit Reports
- Nonconformance Reports

13.4 References

QP 3.05 – Standard Specifications
QP 3.06 – General and Supplemental Conditions
Appendix A – PMT Quality Procedures (Section 4 – Records)

14 QUALITY AUDITS

14.1 Purpose and Scope

This section establishes the requirements for planning, conducting, documenting, and reporting of quality audits adherence to the quality requirements of the contract.

14.2 Responsibilities

The PMT Quality Assurance/Quality Control (QA/QC) Manager is responsible for establishing a program of internal quality audits to verify that the quality-affected PMT activities comply with the quality requirements of this Quality Plan and to determine the effectiveness of the Quality Plan and procedures.

The PMT Quality Assurance/Quality Control (QA/QC) Manager is responsible for establishing a program of quality surveillances to verify that the quality-affected design activities of the Regional Consultants comply with the quality requirements of their respective Quality Plans.

The PMT Program Director is responsible for making the PMT available (either in person or by telephone) to assist the individuals performing the surveillance or the audit, and for implementing corrective and preventive actions.

The PMT Staging/Procurement Manager is responsible for ensuring that quality surveillance/audit requirements are stipulated in the General and Supplemental Conditions.

14.3 Policy and Implementation

Internal quality audits and surveillances shall be conducted to verify whether quality activities and related results comply with requirements and to determine the effectiveness of the Quality Plans and procedures. Audits and surveillances are scheduled on the basis of work completion status and importance of the activity, and are conducted early enough to ensure that adequate control has been planned and implemented during initial activities.

The project is subject to quality surveillance audits by higher level authorities involved in the management and/or oversight of the CHSTP. These observations of the work in progress can be scheduled in advance or conducted unannounced. Potential auditors include, but are not limited to, the State Legislative Analyst, the Federal Transit Administration (FTA), the FTA's Program Management Oversight Consultant, PB's internal auditors, and the ISO 9000 Registrar.

14.4 References

QP 3.06 – General and Supplemental Conditions
QP 14.02 – PMT Internal Quality Audits
QP 14.03 – Quality Surveillance Audits of Regional Consultants

15 TRAINING

15.1 Purpose and Scope

This section establishes the requirements for identification and specification of training requirements as appropriate.

15.2 Responsibilities

The PMT Managers and supervisory personnel are responsible for the selection of qualified personnel to perform specific work tasks, and the indoctrination and project-specific training of their personnel as required. This training shall provide assigned individuals with specific indoctrination and training covering the procedures applicable to the task and responsibility assigned.

The PMT Subsystem Manager and Railroad Operations Manager are responsible for ensuring that qualifications and training requirements are stipulated in the standard specifications for their subsystem.

15.3 Policy and Implementation

All personnel performing activities affecting quality should be qualified on the basis of appropriate education, training, and/or experience, as required. Appropriate training and qualification records should be maintained.

Training is achieved through discussions with individual employees of specific procedures, reading and review assignments, formal training sessions, or individual evaluation by the Supervisor.

Personnel participating in quality audits and inspection activities shall demonstrate, by objective evidence, that they qualify based on education, experience, and demonstrated proficiency. Qualification records shall be maintained and periodically reviewed by the appropriate quality representative to ensure that they are being kept current.

15.4 References

QP 15.01 – Quality System Training
QP 15.02 – Auditor Qualification

Appendix A

Program Management Team Quality Procedures

California High-Speed Train Project		Procedure No. QP 2.01
Title: PMT Quality Plan		Revision No.: 1
Prepared by: PMT QA/QC Manager	Approved by: PMT Program Director	Effective Date: 3/10/10

1. Purpose and Scope

The goal of a Quality Plan is to explicitly plan for the quality related activities needed to ensure that the project requirements are met, including compliance with regulatory requirements. This procedure describes the responsibilities and requirements for preparation, maintenance, review, distribution, and control of this Quality Plan.

2. Responsibilities

The PMT QA/QC Manager, under the guidance of the PMT Operations Manager and PMT Program Director is responsible for the preparation, maintenance, distribution, and control of this Quality Plan.

The PMT Operations Manager, under the guidance of the PMT Program Director, is responsible for the preparation, maintenance, distribution, and control of the Project Management Plan, a companion document to this Quality Plan.

The PMT Program Manager is responsible for the review and approval of this Quality Plan.

3. Process

The Quality Plan shall be prepared in accordance with the Federal Transit Administration's *Quality Assurance and Quality Control Guidelines* (FTA-IT-90-5001.02.1) and shall contain the following:

- Notice of Authorization (signature page), including the signatures of the preparer and reviewer; and a revision block to show the revision history (the revision number, date, and brief description of each revision)
- Table of Contents, indicating the revision number of each section and quality procedure
- An overview of the quality program for the project, describing the relevance of the fifteen quality elements to PMT activities
- Incorporation of or reference to written procedures describing the minimum quality requirements applicable to PMT activities/work products that influence project outcomes.

Quality procedures developed as part of the Quality Plan shall be written in a standard format. The first page of each quality procedure shall include the Procedure title, number, signatures of PMT QA/QC Manager and PMT Program Director, revision number and issue date. Subsequent pages shall include the quality procedure number in the footer. Each quality procedure shall include the following sections:

- 1. Purpose and Scope
- 2. Responsibility(ies)
- 3. Process

- 4. Records
- 5. References (if applicable)

The initial issue and subsequent revisions of the Quality Plan, including quality procedures, shall be prepared by the PMT QA/QC Manager and reviewed and approved by the PMT Program Director.

The Quality Plan shall be distributed – either electronically (read-only format) or in hardcopy – to all PMT members. Access to and/or distribution of the Quality Plan shall be controlled; a list of recipients shall be maintained.

The Quality Plan may be revised in part (one or more sections or quality procedures), or in its entirety. Extensive revisions are reissued without any distinct markings other than the revision number and effective date. Minor revisions shall be represented by bold text and/or a vertical bar in the margin adjacent to the revised text; only the most recent versions shall be so marked. The Table of Contents shall be updated to reflect the new revision number and effective date of the affected sections and/or quality procedures.

Revised documents shall be distributed to all persons possessing a controlled hardcopy or having access to an electronic copy of the affected document. Recipients of the revised hardcopies shall either mark as superseded or discard superseded pages.

4. Records

The following shall be retained by the PMT QA/QC Manager in the project files and made available for quality assurance program reviews:

- Quality Plan – original and subsequent revisions
- List of recipients of the Quality Plan

California High-Speed Train Project		Procedure No. QP 3.01
Title: Data Collection and Field Investigation		Revision No.: 1
Prepared by: PMT QA/QC Manager	Approved by: PMT Program Director	Effective Date: 3/10/10

1. Purpose and Scope

This procedure describes the responsibilities and minimum requirements for data collection and field investigation to support the project.

2. Responsibility

The PMT Environmental Program Manager and Engineering Manager are responsible for preparation, distribution, and implementation of an investigation plan for use during field investigations, and for documenting the results of the investigation for their particular discipline.

3. Process

Prior to initiating field investigations, the PMT (Environmental Program or Engineering) Manager or designee shall prepare an investigation plan. The plan may be a simple statement of the objectives of the investigation; it may also address personnel assignments, team composition, work hours, emergency and daily contacts, site access procedures, equipment requirements, schedule, training, safety procedures, quality control measures, and investigation procedures, including data formats and recording media, as applicable. **Exhibit QP 3.01-1** may be used.

The PMT (Environmental Program or Engineering) Manager shall provide the investigation plan to the members of the investigation team, and ensure that training and resources are provided to the investigation team members as appropriate.

The PMT (Environmental Program or Engineering) Manager shall ensure that the results of the field investigation are documented in a memorandum which describes the purpose of the investigation, summarizes the information obtained and includes field notes and other documents generated during the field investigation.

4. Records

The following shall be retained in the project files and made available for quality audits and surveillance reviews:

- Field investigation plan
- Field investigation memorandum, including field notes and other documents generated during the field investigation
- Training records, as applicable

California High-Speed Train Project	
Field Investigation Plan	
Objective:	**Discipline Task Lead:** **Date:**

Team Member	Assignment

Yes	No	Requirements
☐	☐	Work hour restrictions:
☐	☐	Emergency contact Info:
☐	☐	Site access:
☐	☐	Equipment:
☐	☐	Training:
☐	☐	Safety precautions:
☐	☐	Quality control measures:
☐	☐	Investigation procedures:
☐	☐	Data format/recording media:

Comments:

Exhibit QP 3.01-1 – Field Investigation Plan

California High-Speed Train Project		Procedure No. QP 3.02
Title: **Environmental Methodologies, Technical Memoranda, and Design Criteria**		Revision No.: 1
Prepared by: PMT QA/QC Manager	Approved by: PMT Program Director	Effective Date: 3/10/10

1. Purpose and Scope

Environmental methodologies are prepared to provide the Regional Consultants standard guidance for environmental planning activities (e.g., public outreach, agency coordination, conducting public scoping meetings, alternatives analysis) to ensure consistency in the approach and in the application of criteria and significance thresholds to identify potential impacts.

Technical memoranda are prepared to provide Regional Consultants standard guidance for preliminary engineering activities to ensure that the CHSTP is designed to achieve the mandated performance objectives and to operate as a single system.

Design criteria are prepared to ensure that the CHSTP is designed and constructed to meet federal and state safety regulations and performance requirements. Design criteria are carried forward as final design guidance as part of the CHSTP Design Manual.

This procedure describes the responsibilities and minimum requirements for preparation, maintenance, review, and control of environmental methodologies, technical memoranda, and design criteria.

2. Responsibilities

The Environmental Program Manager is responsible for preparing environmental methodologies by assigning qualified personnel (Originator and Checker) to prepare the document. The Environmental Program Manager may be the Originator or the Checker, but not both.

The Subsystem Manager is responsible for preparing technical memoranda and design criteria related to their subsystem by assigning qualified personnel (Originator and Checker) to prepare the technical memoranda and design criteria. The Subsystem Manager may be the Originator or the Checker, but not both.

3. Process

The responsible Manager communicates the objectives of the technical memorandum, design criteria, or environmental methodology and any specific requirements for content or format to the preparer and checker. The assigned personnel perform the research necessary to prepare the document and, if necessary, solicit available information from sources within or external to the PMT.

After the document has been completed, the Originator signs/initials and dates a review copy and provides it to the Checker – another competent PMT member other than the Originator – for review.

The Checker investigates materials included in the document and verifies that the information presented conveys appropriate guidance, that the presentation is effective and orderly, and that the material included has been checked for accuracy. The Checker also evaluates the document to establish that the material presented is legally defensible – that the document justifies any conclusions drawn, and that it addresses the appropriate issues in accordance with the scope of the assignment. The Checker makes written comments – either directly on the review copy or as a separate document, initials/signs and dates the review documentation and provides it to the Originator.

The Originator incorporates and/or reviews the comments with the Checker to resolve any disagreements. Once all Checker comments are resolved, the Originator provides the completed document and the review documentation to the responsible Manager for verification of completeness and technical adequacy.

The responsible Manager reviews the completed document for completeness and conformance to the objectives, and resolves any concerns with the Originator and Checker. Once satisfied with the document, the responsible Manager signs/initials and dates the review documentation, and transmits the completed document for distribution.

If reviews are made on hardcopies, it is suggested that a rubber stamp be prepared so that the review copy can be stamped with the check print designation and spaces provided for manually filling in the appropriate initials/signatures and dates.

Revisions to completed documents shall be prepared, checked, and verified (and records kept and maintained) in the same manner as required for the original studies/reports. Revisions shall be identified by a unique sequential number or date to distinguish the revised document from the original document.

4. Records

The following records shall be retained in the project files and made available for quality audits and surveillance reviews:

- A record copy of the document (electronic or hardcopy), including subsequent revisions, as it was submitted to the Authority
- Supporting documentation (e.g., field data, calculations, excerpts from publications)
- Review documentation (electronic or hardcopy) showing comments disposition, signed/initialed and dated by the Originator, Checker, and responsible Manager

5. References

TM 0.2 – Tech Memo Review Protocol

California High-Speed Train Project		Procedure No. QP 3.03
Title: **Design Calculations**		Revision No.: 1
Prepared by: PMT QA/QC Manager	Approved by: PMT Program Director	Effective Date: 3/10/10

1. Purpose and Scope

A calculation is a complete sequence of computation steps resulting in a defined objective, such as the design of a physical facility or a facility component, and is represented by a stand-alone set of calculation sheets.

This procedure describes the responsibilities and minimum requirements for preparation, maintenance, review, and control of manual and computer-generated calculations.

2. Responsibilities

The Railroad Operations Manager and Subsystem Managers have the primary responsibility for calculations related to their discipline or subsystem, by assigning qualified personnel (Originators and Checkers) to perform the calculations. The responsible Railroad Operations Manager or Subsystem Manager may be the Originator or the Checker, but not both.

The Railroad Operations Manager and Subsystem Managers are also responsible for identifying design criteria and/or design software that are applicable to each calculation related to their discipline or subsystem.

3. Process

The Originator prepares the calculations in accordance with generally accepted guidelines, codes, criteria, practices, and standards. At a minimum, calculations shall include the project name; subject of the calculations; known input data; design assumptions; references and back-up materials, if any; and dimensional units. Each page of the calculations shall be numbered consecutively. The Originator shall check to see that the results of the design calculations are adequately reflected in documents that are influenced by the design (e.g., standard or directive drawings, standard specifications, design criteria).

After the calculations have been completed and prior to any major reliance on the outcome, the Originator provides a review copy (electronic or hardcopy) to the Checker to verify the accuracy of the outcome.

The Checker verifies the correctness of the assumptions upon which the calculations are based and compliance with the guidelines, codes, criteria, and standards; and reviews the calculations for clarity and legibility, proper documentation, technical concept, and numerical accuracy. The Checker reviews the calculations in their entirety, clearly marks (manually or electronically) the review copy with any alterations or corrections, preferably in red, and returns it to the Originator.

The Originator incorporates the mark-ups into the original calculations and/or reviews the comments with the Checker to resolve any disagreements. For manual calculations, each page of the original calculations shall be signed/initialed and dated by the Originator and the Checker; for computer-generated calculations, the Originator and Checker shall sign/initial

and date the front page of the finished output document. Alternatively, **Exhibit QP 3.03-1** may be used. The initials/signatures and dates of the Originator and Checker serve to indicate their certification that the calculations are accurate as documented.

Completed calculations, initialed/signed and dated by the Originator and Checker, are forwarded to the responsible Railroad Operations or Subsystem Manager to verify compliance with the project requirements. The responsible Manager resolves any concerns with the Originator and Checker and, once satisfied, initials/signs and dates the front page of the calculations to indicate verification.

Revisions to completed calculations shall be prepared, checked, and verified (and records kept and maintained) in the same manner as required for the original calculations. Minor revisions may be made directly to the original calculations by clouding and annotating the revisions with a sequential number. Superseded calculations, if retained, shall be marked VOID or SUPERSEDED.

4. Records

The following records shall be retained in the project files and made available for quality audits and surveillance reviews:

- The original completed calculations and subsequent revisions, signed/initialed and dated by the Originator, Checker, and responsible Manager
- A review copy of the completed calculations
- Superseded calculations (if retained), marked VOID or SUPERSEDED
- Supporting documentation (e.g., drawings, sketches, and product data sheets)

California High-Speed Train Project Calculation Cover Sheet	
SUBJECT:	PROJECT NO.: 13259
	FILE NO.:
ORIGINATOR:	CALC NO.:
CHECKER:	DATE:
RESPONSIBLE MANAGER:	DATE:
OBJECTIVE:	
ASSUMPTIONS:	
REFERENCES:	
CONCLUSIONS:	

Comments:	Yes	No	N/A	Remark
Purpose of calculation clearly identified	☐	☐	☐	
Input data taken from reviewed and accepted calculations	☐	☐	☐	
Test data appropriately factored into calculations	☐	☐	☐	
Design criteria referenced	☐	☐	☐	
Interfaces appropriately factored into calculations	☐	☐	☐	
Assumptions/theories clearly defined and applicable	☐	☐	☐	
Design methods are consistent with accepted practices	☐	☐	☐	
Mathematical computations are correct and accurate	☐	☐	☐	
Results are reasonable	☐	☐	☐	
Calculations are legible and reproducible	☐	☐	☐	
Supporting documentation is attached	☐	☐	☐	

Rev. No.		BY	DATE	CHKD	DATE	VER'D	DATE
3							
2							
1							
0							

Exhibit QP 3.03-1 – Calculation Cover Sheet

California High-Speed Train Project		Procedure No. QP 3.04
Title: Standard and Directive Drawings		Revision No.: 1
Prepared by: PMT QA/QC Manager	Approved by: PMT Program Director	Effective Date: 3/10/10

1. Purpose and Scope

Directive drawings supplement the design guidance and criteria to ensure consistency during design for system-wide elements and features of the CHSTP. Directive drawings are similar to technical memoranda in providing design guidance for the preliminary engineering of the CHSTP. Directive drawings illustrate design requirements in a graphical format and may be used to expand on figures or tables included in the technical memoranda. Directive drawings may be carried forward as final design guidance as part of the CHSTP Design Manual.

Standard drawings are prepared as a final design aid and are principally targeted for use during construction. Generally, standard drawings are prepared for CHSTP elements that require consistency as a constructed item to support operational or maintenance requirements. Standard drawings are signed and sealed by a qualified, licensed professional engineer in the State of California.

This procedure describes the responsibilities and minimum requirements for preparation, maintenance, review, and control of standard drawings and directive drawings.

2. Responsibility

The Subsystem Manager is responsible for producing standard and directive drawings related to their subsystem. The Subsystem Manager determines the drawings that are required, assigns qualified personnel (Originators and Checkers) to prepare and check the drawings, assigns a qualified, licensed professional engineer in the State of California to sign and seal each standard drawing, and verifies that the drawings comply with the project requirements. The Subsystem Manager may be the Originator or the Checker, but not both. For standard drawings, the licensed professional engineer who signs and seals the drawing should be the Originator, the Checker, or the Subsystem Manager.

3. Process

The Originator develops the drawing in accordance with the project requirements. The Originator initiates, expands, reviews, and back-checks the drawing during the various stages of preparation. Once satisfied with the content of the drawing, the Originator makes a copy of the drawing (a "check print"), signs/initials and dates the check print, and provides it to the Checker for review.

The Checker reviews the drawing for correctness, coordination/compatibility with relevant calculations and/or technical memoranda, proper interface with other drawings, and conformance to drafting standards applicable to the project. The Checker reviews the check print in its entirety for form, applicability, clarity, and detailed accuracy, and clearly marks it with any alterations or corrections, preferably in red, signs/initials and dates the check print, and returns it to the Originator.

The Originator reviews the check print with the Checker and resolves any disagreements over the format and content. Once all Checker comments are resolved, the Originator provides the check print to the Drafter for correction as noted.

The Drafter incorporates any alterations or corrections into the drawing and annotates the check print, preferably using a highlighter to indicate incorporation of each correction, and signs/initials and dates the check print.

Completed drawings and final check prints are forwarded to the Subsystem Manager for verification of completeness, technical adequacy, and compliance with the project requirements and interface requirements. The Subsystem Manager signs/initials and dates the final check print to indicate verification.

Upon completion of the drawing review process, the drawing designated as the check print contains the following:

- Check print designation
- Indication of "Designed by" with signature or initials of drawing Originator and date of readiness for review
- Indication of "Drawn By" with signature or initials of Drafter and date of completion
- Indication of "Checked by" with signature or initials of Checker and date of review completion
- Indication of "Verified by" with signature or initials of Subsystem Manager and date of verification

To facilitate this process, it is suggested that a rubber stamp be prepared so that a hardcopy of each drawing constituting a check print can be stamped with the check print designation and spaces provided for manually filling in the appropriate initials/signatures and dates.

Where the drawing title block includes designations of "Designed By", "Drawn By", "Checked By", and "In Charge", the names/initials shown shall be consistent with those shown on the Check Print for "Designed by", "Drawn by", "Checked by", and "Verified by".

Revisions to completed drawings shall be prepared, checked, corrected, and verified (and records kept and maintained) in the same manner as required for the original drawings. Revisions shall be identified by a unique sequential number or date to distinguish the revised document from the original document.

4. Records

The completed drawings and check prints (electronic or hardcopy), including subsequent revisions, shall be retained in the project files and available for quality audits and surveillance reviews.

California High-Speed Train Project		Procedure No. QP 3.05
Title: Standard Specifications		Revision No.: 1
Prepared by: PMT QA/QC Manager	Approved by: PMT Program Director	3/10/10

1. Purpose and Scope

Standard specifications are prepared as a final design aid and are principally targeted for use during construction. Generally, standard specifications are prepared for CHSTP elements that require consistency as a constructed item to support operational or maintenance requirements. Standard specifications are signed and sealed by a qualified, licensed professional engineer in the State of California

This procedure describes the responsibilities and minimum requirements for preparation, maintenance, review, and control of standard specifications.

2. Responsibilities

The Subsystem Manager is responsible for producing standard specifications related to their subsystem. The Subsystem Manager determines the specifications that are required, assigns qualified personnel (Originator and Checker) to prepare and review the specifications, assigns a qualified, licensed California professional engineer or architect, as applicable, to sign and seal the standard specifications for their subsystem, and verifies that the specifications comply with the project requirements. The licensed professional engineer who signs and seals the subsystem standard specifications should be the Originator, the Checker, or the Subsystem Manager. The Subsystem Manager may be the Originator or the Checker, but not both.

The Specifications Manager is responsible consistency of format, content, structure, and organization among and within specification sections.

3. Process

The Specifications Manager prepares a standard template for use in preparation of standard specification sections. Specifications for this project will be prepared using Construction Specifications Institute (CSI) formats.

The Originator prepares the standard specification section. The following provides a basis for preparation and review of standard specifications:

- Technical adequacy for the intended purpose
- Compliance with applicable federal and state contracting laws
- Clear and complete definition of work of the section
- Identification of items of work and all products/materials required
- Current codes, standards, and manufacturer references, where applicable
- Requirements for quality control of products and services furnished by supplier:
    - Supplier/personnel qualifications
    - Product identification and traceability
    - Special work processes related to production, handling, storage, installation or servicing

    - Inspection and testing requirements
    - Calibration and maintenance of test equipment
    - Control of nonconforming work
    - Documentation
- Consistency of format, content, structure, and organization among and within specification sections
- Consistency between the standard drawings and the standard specifications
- Screening of the written material to edit language that could cause confusion during construction
- Identification of measurement and payment terms for each element of the construction and procurement, where applicable
- Clear and consistent language that is common to the construction industry

After a specification section has been completed, the Originator signs/initials and dates a review copy and provides it to the Specifications Manager for review.

The Specifications Manager reviews the specification section in its entirety. The Specifications Manager's review shall check for:

- Clear and complete definition of work of the section
- Consistency of format, content, structure, and organization among and within specification sections
- Consistency between the standard drawings and the standard specifications
- Screening of the written material to edit language that could cause confusion during construction
- Identification of measurement and payment terms for each element of the construction and procurement, where applicable
- Clear and consistent language that is common to the construction industry

The Specifications Manager makes written comments – either directly on the review copy or as a separate document – and provides the specification section and review documentation to the Checker.

The Checker reviews the specification section and review documentation in their entirety. The Checker's review shall check for:

- Technical adequacy for the intended purpose
- Compliance with applicable federal and state contracting laws
- Clear and complete definition of work of the section
- Identification of items of work and all products/materials required
- Current codes, standards, and manufacturer references, where applicable
- Requirements for quality control of products and services furnished by supplier
- Consistency of content among and within specification sections
- Consistency between the standard drawings and the standard specifications
- Screening of the written material to edit language that could cause confusion during construction
- Identification of measurement and payment terms for each element of the construction and procurement, where applicable
- Clear and consistent language that is common to the construction industry

The Checker makes written comments – either directly on the review copy or as a separate document – signs/initials and dates the review documentation, and provides the specification section and review documentation to the Originator.

The Originator incorporates and/or reviews the comments with the Specifications Manager and Checker to resolve any disagreements. Once all Specifications Manager and Checker comments are resolved, the Originator, through the Specifications Manager, provides the completed specification section and the review documentation to the Subsystem Manager.

The Subsystem Manager reviews the completed specification section and review documentation to verify completeness and consistency with the project requirements. The Subsystem Manager signs/initials and dates the review documentation to indicate verification, and transmits the completed specifications section to the Specifications Manager for compilation with other specifications sections.

If reviews are made on hardcopies, it is suggested that a rubber stamp be prepared so that the review copy of each specification section can be stamped with the check print designation and spaces provided for manually filling in the appropriate initials/signatures and dates.

Revisions to completed specifications shall be prepared, checked, reviewed, and approved (and records kept and maintained) in the same manner as required for the original specifications. Revisions shall be identified by a unique sequential number or date to distinguish the revised document from the original document.

4. Records

The following records shall be retained in the project files and made available for quality audits and surveillance reviews:

- A record copy of the completed specifications and subsequent revisions
- Supporting documentation (from suppliers, etc.)
- Review documentation (electronic or hardcopy) showing comments disposition, signed/initialed and dated by the Originator, Specifications Manager, Checker, and Subsystem Manager

California High-Speed Train Project		Procedure No. QP 3.06
Title: General and Supplemental Conditions		Revision No.: 1
Prepared by: PMT QA/QC Manager	Approved by: PMT Program Director	3/10/10

1. Purpose and Scope

The conditions of the contract are written text that defines the basic rights, responsibilities, and relationships of the parties associated in the construction of a project.

- General conditions are written to have wide applicability and to facilitate contract preparers, reviewers, bidders, and users the opportunity of becoming familiar with the rights, responsibilities, and relations of parties associated with Authority contracts.
- Supplementary conditions modify the requirements of the general conditions when necessary to fit the needs of a specific project.

This procedure describes the responsibilities and minimum requirements for preparation, maintenance, review, and control of general and supplemental conditions.

2. Responsibilities

The Staging/Procurement Manager is responsible for producing the general conditions for the CHSTP and the supplemental conditions for each contract package. The Staging/Procurement Manager determines the specifications that are required, assigns qualified personnel (Originator and Checker) to prepare and review the specifications, and verifies that the specifications comply with the project requirements. The Staging/Procurement Manager may be the Originator or the Checker, but not both.

The Specifications Manager is responsible consistency of format, content, structure, and organization among and within specification sections.

3. Process

The Specifications Manager prepares a standard template for use in preparation of standard specification sections. Specifications for this project will be prepared using Construction Specifications Institute (CSI) formats.

The Originator prepares the specification section. The following provides a basis for preparation and review of general and supplemental conditions:

- Compliance with applicable federal and state contracting laws
- Clear and complete description of the rights, responsibilities and relations of the parties
- Consistency of format, content, structure, and organization among and within specification sections
- Screening of the written material to delete language that could cause confusion during construction
- Clear and consistent language that is common to the construction industry

After a specification section has been completed, the Originator signs/initials and dates a review copy and provides it to the Checker for review.

The Checker reviews the specification section in its entirety, makes written comments – either directly on the review copy or as a separate document – signs/initials and dates the review documentation, and provides the specification section and review documentation to the Originator.

The Originator incorporates and/or reviews the comments with and Checker to resolve any disagreements. Once all Checker comments are resolved, the Originator provides the completed specification section and the review documentation to the Staging/Procurement Manager.

The Staging/Procurement Manager reviews the completed specification section and review documentation to verify completeness and consistency with the project requirements. The Subsystem Manager signs/initials and dates the review documentation to indicate verification, and retains the completed specifications section for compilation with other specification sections.

If reviews are made on hardcopies, it is suggested that a rubber stamp be prepared so that the review copy of each specification section can be stamped with the check print designation and spaces provided for manually filling in the appropriate initials/signatures and dates.

Revisions to completed specifications shall be prepared, checked, reviewed, and approved (and records kept and maintained) in the same manner as required for the original specifications. Revisions shall be identified by a unique sequential number or date to distinguish the revised document from the original document.

4. Records

The following records shall be retained in the project files and made available for quality audits and surveillance reviews:

- A record copy of the completed specifications and subsequent revisions
- Supporting documentation (from suppliers, etc.)
- Review documentation (electronic or hardcopy) showing comments disposition, signed/initialed and dated by the Originator, Checker, and Staging/Procurement Manager

California High-Speed Train Project		Procedure No. QP 3.07
Title: Petition for a Proposed Rule of Particular Applicability		Revision No.: 1
Prepared by: PMT QA/QC Manager	Approved by: PMT Program Director	3/10/10

1. Purpose and Scope

While some existing and federal and state railroad safety regulations in the United States (U.S.) are applicable to high-speed rail systems, the existing federal and state safety regulations do not adequately address the full range of safety requirements that are included in modern high-speed rail safety regulations found in Europe and Asia. To regulate the safety of the high-speed rail system in California, it is necessary to develop a set of safety requirements that reflect existing U.S. regulations and incorporate best worldwide high-speed rail practices, in the form of a Rule of Particular Applicability (RPA). The Federal Railroad Administration (FRA) is responsible for developing the CHSTP RPA. In making recommendations for a proposed RPA, the Authority will submit a Petition for a Proposed Rule of Particular Applicability to the FRA for consideration and in accordance with current rulemaking procedures.

This procedure describes the responsibilities and minimum requirements for preparation, maintenance, review, and control of system safety requirements to be incorporated into the Authority's Petition for a Proposed RPA for consideration by FRA in developing the Final RPA.

2. Responsibilities

The Regulatory Approvals Manager is responsible for identifying and tracking development of "Substance of the Rule" (SOTR) text based on the CHSTP system requirements. The Regulatory Approvals Manager is also responsible for developing the SOTR structure based on guidance from FRA.

The Subsystem Managers are responsible for preparing SOTR text related to their subsystem by assigning qualified personnel (Originator and Checker) to prepare the SOTR text. The Subsystem Manager may be the Originator or the Checker, but not both.

The System Interface Manager is responsible for verifying that the interdisciplinary safety interfaces are coordinated and reflected in the SOTR text.

3. Process

The Regulatory Approvals Manager identifies the system requirements to be included in the RPA Petition, by evaluating the applicability of existing federal and state safety regulations and modern high-speed rail safety regulations to the CHSTP. To be included in the RPA petition, the safety requirement should satisfy one of three conditions:

- An existing federal railroad safety regulation is applicable and there is no similar European standard.
- An existing federal railroad safety regulation is applicable and there is a similar European standard. The requirements may not be the same and analysis would be undertaken to determine the most appropriate requirements for the CHSTP.

- An existing European standard is applicable and there is no similar federal or state railroad safety regulation. A CHSTP system requirement would need to be generated based on the European standard. Analysis would be undertaken to determine the most appropriate requirements for the CHSTP.
- A requirement must be addressed for which there is no applicable federal/state regulation or European standard.

The Regulatory Approvals Manager maintains a listing of SOTR text to be included in the RPA Petition, associates each SOTR text with the related federal regulation and/or CHSTP system requirements, coordinates with the Subsystem Managers to develop the SOTR text, tracks the development, and consolidates the technical documentation into the RPA Petition.

The Subsystem Manager communicates the objectives of the SOTR text and any specific requirements for content or format to the preparer and checker. The assigned personnel perform the research necessary to prepare the SOTR text and, if necessary, solicit available information from sources within or external to the PMT.

After the SOTR text has been completed, the Originator signs/initials and dates a review copy and provides it to the Checker – another competent PMT member other than the Originator – for review.

The Checker investigates materials included in the SOTR text and verifies that the information presented conveys appropriate guidance, that the presentation is effective and orderly, and that the material included has been checked for accuracy. The Checker also evaluates the document to establish that the material presented is legally defensible – that the document justifies any conclusions drawn, and that it addresses the appropriate issues in accordance with the scope of the assignment. The Checker makes written comments – either directly on the review copy or as a separate document, initials/signs and dates the review documentation and provides it to the Originator.

The Originator incorporates and/or reviews the comments with the Checker to resolve any disagreements. Once all Checker comments are resolved, the Originator provides the completed document and the review documentation to the Subsystem Manager for verification of completeness and technical adequacy.

The Subsystem Manager reviews the completed document for completeness and conformance to the objectives, and resolves any concerns with the Originator and Checker. Once satisfied with the document, the Subsystem Manager signs/initials and dates the review documentation, and transmits the completed SOTR text to the Regulatory Approvals Manager for review by the Systems Integration Manager and the FRA.

The Regulatory Approvals Manager submits completed System Requirement input forms (that include SOTR text) to the FRA and the Systems Integration Manager for review. The responsibilities and minimum requirements for addressing FRA comments are described in **QP 3.11 – External Design Reviews**.

Concurrent with and following FRA review, the Systems Integration Manager conducts an integration level review that may result in comments to be addressed by Subsystem Managers. The Subsystem Manager incorporates and/or reviews the comments with the Systems Integration Manager to resolve any disagreements. Once all comments are resolved, the Subsystem Manager provides the completed document and the review documentation to

the Regulatory Approvals Manager for incorporation into the Petition for a Proposed Rule of Particular Applicability.

If reviews are made on hardcopies, it is suggested that a rubber stamp be prepared so that the review copy can be stamped with the check print designation and spaces provided for manually filling in the appropriate initials/signatures and dates.

Revisions to completed documents shall be prepared, checked, and verified (and records kept and maintained) in the same manner as required for the original studies/reports. Revisions shall be identified by a unique sequential number or date to distinguish the revised document from the original document.

4. Records

The following records shall be retained in the project files and made available for quality audits and surveillance reviews:

- A listing of the SOTR text and associated federal railroad safety regulation and/or CHSTP safety requirement
- A record copy of the SOTR text for each system requirement for inclusion in the RPA Petition (electronic or hardcopy), including subsequent revisions, as it was submitted to the Authority
- Supporting documentation (e.g., field data, calculations, excerpts from publications)
- Review documentation (electronic or hardcopy) showing comments disposition, signed/initialed and dated by the Originator, Checker or System Interface Manager, and Subsystem Manager for the SOTR text for each system requirement to be included in the RPA Petition

5. References

TM 0.9 – Process to Support Development of a CHSTP Rule of Particular Applicability

California High-Speed Train Project		Procedure No. QP 3.08
Title: Capital Cost Estimates		Revision No.: 1
Prepared by: PMT QA/QC Manager	Approved by: PMT Program Director	Effective Date: 3/10/10

1. Purpose and Scope

With the size, complexity, phased design, and number of participants, it is important that a capital cost estimating methodology (CCEM) be developed for the CHSTP, to provide a consistent framework for estimating the cost. It is also important that the CCEM be flexible enough to be applied at each point in the development process to appropriately support the tracking, monitoring, and control of cost changes through each of the program's design and implementation phases.

This procedure describes the responsibilities and minimum requirements for preparation, maintenance, review, and control of the capital cost estimate for the CHSTP.

2. Responsibilities

The Regional Consultants are responsible for providing quantities and cost estimates for each alignment alternative for their section.

The PMT Rolling Stock Subsystem Manager is responsible for developing the rolling stock procurement estimate.

The PMT Cost Estimating Manager is responsible for establishing the Work Breakdown Structure (WBS) that will be applied to cost estimating and reporting, and a list of unit cost elements with the unit of measure and unit cost for each element. The PMT Cost Estimating Manager is also responsible for coordinating the development of the cost estimate and compiling the cost estimate, including the application of appropriate contingencies derived through the risk management process.

The PMT Operations Manager is responsible for reviewing the cost estimate.

The PMT Program Director is responsible for approval of cost estimates and, when appropriate, for convening a panel of experts to review the estimate.

3. Process

The PMT Cost Estimating Manager develops the WBS that will be applied to cost estimating and reporting. The WBS includes the development of a coding system that allows the cost estimates to be sorted and presented by elements such as geographic region, political or municipal boundaries, construction package, schedule activity, and similar project elements.

The PMT Cost Estimating Manager develops a list of unit cost elements with associated unit of measure and unit price for each of the construction activities that will be identified and quantified from the design documents. Base unit prices will be developed through the use of historical data and by unit cost analysis, as appropriate, using labor, equipment, and material rates. The list of unit cost elements and unit prices is provided to the Regional Consultants for use in preparing estimated quantities for their section.

The Regional Consultants prepare the quantities and basis of estimate for their section/subsystem, and provide the documentation to the PMT Regional Manager for incorporation into the program level cost estimate. The basis of estimate includes:

- Scope of estimate – a brief written description of what the estimate covers
- Drawings – references to drawings or sketches on which estimate is based
- Specifications – references to specifications (if any) on which estimate is based
- Quantities – description of how quantities were developed as well as any limitations
- Base unit price assessment, including any adjustments based on conditions specific to their section
- Construction schedule – description of start and finish dates, and sequence of major phases of work if pertinent to the estimate
- Cost exclusions – a list of any items not included in the estimate that may become a CHSTP expense
- Estimate discussion/comments – description of any items that can affect either cost or schedule that have not been covered by any of the above items, and any observations, recommendations or unusual features from the estimator's perspective

The Regional Consultants also identify the limits of impacted properties required for the construction, operation, and maintenance of the high-speed train system, following guidance from the PMT. The Regional Consultants provide the right-of-way cost estimate for their section to the PMT Regional Manager.

The PMT Rolling Stock Manager prepares the estimate for the procurement of rolling stock, including both revenue and non-revenue vehicles. The quantities in support of the estimate shall be prepared in accordance with the requirements of QP 3.03 – Calculations; the basis of estimate shall be prepared in accordance with the requirements of QP 3.02 – Environmental Methodologies, Technical Memoranda, and Design Criteria.

The PMT Cost Estimating Manager assembles the program-wide cost estimate by combining construction costs, right-of-way costs, rolling stock procurement costs, applying professional services costs as a percentage of the total estimated construction costs (excluding right-of-way and rolling stock procurement costs), and incorporating any adjustments for contingency and escalation as appropriate. Once completed, the PMT Cost Estimating Manager signs/initials and dates a review copy (hardcopy or electronic) of the program-wide cost estimate and provides it to the PMT System Integration Manager for verification.

The PMT Operations Manager reviews the program level cost estimate for completeness and accuracy, and resolve any concerns with the PMT Cost Estimating Manager. Once satisfied with the estimate, the PMT Operations Manager signs/initials and date the review copy, and forwards the original document to the PMT Program Director for approval and transmittal to the Authority.

If warranted, the PMT Program Director convenes a team of subject matter experts representing the PMT, Regional Consultants, and the Authority to review the estimate – specifically, to discuss and confirm the design, construction and estimating inputs and assumptions to prepare the estimate. Changes and adjustments that are accepted at this meeting will be incorporated before the final estimate submittal.

Estimates will be considered a draft until they receive a final review and approval by the Authority.

Revisions to completed cost estimates shall be prepared, checked, reviewed, and approved (and records kept and maintained) in the same manner as required for the original cost estimate. Revisions shall be identified by a unique sequential number or date to distinguish the revised document from the original document.

4. Records

The following records shall be retained in the project files and made available for quality audits and surveillance reviews:

- Regional Consultants' construction quantities and basis of estimate
- Regional Consultants' right-of-way estimates
- Rolling stock procurement estimate
- A review copy of the program-wide cost estimate(s), including subsequent revisions, signed/initialed and dated by the PMT Cost Estimating Manager and PMT Operations Manager
- Record of changes and adjustments as a result of the estimate review by subject matter experts, if applicable
- A record copy of the draft program-wide cost estimate(s), including subsequent revisions, as submitted to the Authority by the PMT Program Director
- A record copy of the program-wide cost estimate(s), including subsequent revisions, as approved by the Authority

5. References

TM 0.8 – Programmatic Cost Update Methodology & Backup

TM 1.1.19 – Capital Cost Estimating Methodology for the 15% Design Level

TM 1.1.20 – Project Scheduling Methodology

California High-Speed Train Project		Procedure No. QP 3.09
Title: Design Interface Management		Revision No.: 1
Prepared by: PMT QA/QC Manager	Approved by: PMT Program Director	Effective Date: 3/10/10

1. Purpose and Scope

The CHSTP includes multiple subsystems with complex interfaces. Such interfaces are between systems and subsystems, and between systems and fixed facilities.

This procedure describes the responsibilities and minimum requirements for design interface management for the CHSTP.

2. Responsibilities

The Systems Integration Manager, under the supervision of the Engineering Manager is responsible for the functional integration of various subsystems.

The Subsystem Managers are responsible for coordinating the interfaces and/or addressing the interface requirements as appropriate.

3. Process

The Systems Integration Manager shall identify, document, maintain, and communicate the performance interfaces between interdependent systems/subsystems and the responsible Subsystem Manager or Regional Consultant to ensure that the interfaces are properly addressed. In addition, at the direction of the Engineering Manager, the Systems Integration Manager reviews work products of the Engineering Management Team (EMT), and provides comments to the responsible Subsystem Manager.

The reviews assess the EMT word products against the following:

- General completeness of the document in keeping with its intended purpose
- Agreement between documents produced by various subsystems within the EMT
- Conformance to generally accepted engineering principles and standards of practice
- Conformance to applicable state and federal codes, regulations, and standards
- Interfaces with other design/system elements
- Constructability

The Subsystem Manager or Regional Consultant shall address the review comments applicable to their work, and shall incorporate them into the work product as appropriate, in accordance with the requirements of their respective Quality Plan.

4. Records

The following records shall be retained in the project files and made available for quality audits and surveillance reviews:

- Documentation/lists of interface requirements with identification of responsible Subsystem Manager
- Comments and responses as a result of Subsystem Manager design interface reviews

California High-Speed Train Project		Procedure No. QP 3.10
Title: Section Reviews		Revision No.: 1
Prepared by: PMT QA/QC Manager	Approved by: PMT Program Director	Effective Date: 3/10/10

1. Purpose and Scope

Section reviews are performed by the PMT Engineering Management Team (EMT) to evaluate the overall compliance of Regional Consultants' design deliverables with respect to the project design requirements and the technical/constructible feasibility of the proposed design.

This procedure describes the responsibilities and minimum requirements for EMT performance of section reviews of Regional Consultants' design deliverables.

2. Responsibilities

The Regional Consultant Project Manager is responsible for preparing and submitting design deliverables for EMT review, and for documenting and incorporating comments and responses as appropriate.

The PMT Regional Manager is responsible for scheduling and coordinating EMT reviews of the Regional Consultant's design for their section. The PMT Regional Manager is also responsible for performing a system-wide integration review of the deliverables.

The PMT Subsystem Managers are responsible for reviewing the Regional Consultants' design deliverables as they pertain to their subsystem, by assigning qualified personnel to perform the reviews.

The PMT System Integration Manager is responsible for reviewing the Regional Consultants' design deliverables with particular emphasis on system interfaces to confirm that they are properly addressed.

3. Process

The Regional Consultant Project Manager prepares and submits design deliverables to the PMT Regional Manager and PMT Regional Manager for review.

The PMT Regional Manager schedules and coordinates the review, including conducting a review meeting with the Regional Consultants and EMT reviewers, if appropriate.

The Regional Manager performs system-wide integration review on boundary conditions and confirms design integration with adjacent sections.

The Subsystem reviewers perform a review to assess the Regional Consultants' design deliverables pertaining to their subsystem against the following:

- Conformance to generally accepted engineering principles and standards of practice
- Conformance to applicable federal and state codes, regulations, and standards
- Conformance to applicable project requirements
- Technical/constructible feasibility

The System Integration Manager performs a review to assess the Regional Consultants' design deliverables against the following:

- General completeness of the package in keeping with its intended purpose
- Conformance to generally accepted engineering principles and standards of practice
- Conformance to applicable federal and state codes, regulations, and standards
- Conformance to applicable project requirements, including reliability, safety and security
- Interfaces with other design/system elements

Review comments by the reviewers shall be assembled and transmitted to the PMT Regional Manager and Regional Consultants.

The Regional Consultant Project Manager or delegate reviews and incorporates, as applicable, the comments or suggestions made by the reviewers, and retains a record of the comments and their disposition, along with any marked documents resulting from the review. The disposition of the comments is conveyed to the reviewers to obtain concurrence with each comment response and proposed action.

4. Records

The following records shall be retained in the project files and made available for quality audits and surveillance reviews:

- PMT review comments and/or marked review documents
- Regional Consultants' record of the comments, responses, and disposition and, where appropriate, reviewer concurrence
- Regional Consultants' record of verification of incorporation of the review comments in subsequent submittals, as appropriate

5. References

TM 0.7 – Design Submittal Protocol

California High-Speed Train Project		Procedure No. QP 3.11
Title: **External Design Reviews**		Revision No.: 1
Prepared by: PMT QA/QC Manager	Approved by: PMT Program Director	Effective Date: 3/10/10

1. Purpose and Scope

Formal reviews of PMT program documents may be requested by the Authority at their discretion.

This procedure describes the responsibilities and minimum requirements for addressing comments received from external design reviews.

2. Responsibility

The PMT Engineering Manager, PMT Environmental Program Manager, PMT Staging/Procurement Manager and PMT Railroad Operations Manager are responsible for documenting review comments responses applicable to their discipline, and for verifying that the comments are addressed in subsequent submittals of the project documents as appropriate.

3. Process

The responsible PMT Manager or designee will consolidate comments received as a result of external reviews and assign and transmit them to the appropriate PMT staff for evaluation, discussion, formal response, and eventual incorporation into the design documents as warranted. Such evaluations and discussions may be carried out through Comment Resolution Meetings held among the representatives who provided the review comments, the responsible PMT Manager and PMT staff. The PMT Manager will act as the coordinator for all design input originating from all groups, agencies, or departments party to the review process.

The responsible PMT staff shall ensure that a formal response is documented for each comment assigned to him/her, and shall ensure that the comments are addressed in subsequent submittals of the project documents as appropriate.

4. Records

The following records shall be retained in the project files and made available for quality audits and surveillance reviews:

- A record of the comments, responses, disposition and, where appropriate, reviewer concurrence
- A record of verification of incorporation of the review comments in subsequent submittals, as appropriate

California High-Speed Train Project		Procedure No. QP 9.01
Title: Equipment Calibration and Maintenance		Revision No.: 1
Prepared by: PMT QA/QC Manager	Approved by: PMT Program Director	Effective Date: 3/10/10

1. Purpose and Scope

This procedure applies to field equipment that is critical to the accuracy of data collected during field assignments and that requires maintenance and calibration to ensure its reliability, including testing and measuring devices.

2. Responsibility

The PMT Task Lead is responsible for calibration and maintenance of equipment used for data collection.

3. Process

Prior to initiating field activities, the PMT Task Lead or user shall inspect equipment necessary for the field assignment to verify that it is in working condition and, for equipment requiring calibration, that it has been calibrated in accordance with the manufacturer's criteria or to a nationally or internationally recognized standard. Any suspect equipment shall not be used until its status has been clarified. If equipment is found to be out of calibration after use, the extent shall be quantified and the PMT Task Lead shall assess the impact and take corrective action as necessary.

4. Records

Records of equipment calibration shall be retained in the project files and made available for quality audits and surveillance reviews.

Records of disposition of suspect or damaged equipment shall be maintained.

California High-Speed Train Project		Procedure No. QP 12.01
Title: Nonconformance Reports and Corrective Actions		Revision No.: 1
Prepared by: PMT QA/QC Manager	Approved by: PMT Program Director	Effective Date: 3/10/10

1. Purpose and Scope

Nonconformance Reports (NCRs) and corrective actions are measures taken to correct conditions that could negatively impact quality of performance/deliverables. Conditions that warrant initiation of an NCR include the following:

- Failure to obtain appropriate approvals before making changes to policies or procedures
- Repeated failure to follow approved procedures
- Failure to implement action to resolve a deficiency discovered during a project audit
- Failure to process design changes in accordance with established procedures

This procedure describes the responsibilities and process for documenting and tracking nonconformances and corrective actions.

2. Responsibilities

The PMT QA/QC Manager is responsible for documenting the nonconformance, identifying the corrective action(s) and the responsible party(ies), verifying the implementation and effectiveness of the corrective action(s), and maintaining a record of disposition.

The PMT Program Director is responsible for implementation of the corrective action(s).

3. Process

When an issue has been identified that is deemed an unacceptable attainment of quality or insufficient evidence of quality control in the design work, it shall be discussed with the responsible party to establish concurrence, and an NCR shall be prepared (**see Exhibit QP 12.01-1**).

NCRs can be initiated by any of the following:

- A member of the PMT
- Anyone affiliated with the project having the requisite technical competence to identify the NCR

Immediately upon identification of a nonconformance, the individual detecting the discrepancy shall initiate an NCR by describing the deviation from acceptable quality on the NCR form and forwarding it to the PMT QA/QC Manager. The PMT QA/QC Manager or a qualified auditor will discuss the nonconforming condition with the auditee, who will identify the likely cause of the nonconformance. The PMT QA/QC Manager or qualified auditor will identify a responsible party to address the issue, assist in determining the appropriate corrective action(s) and timeline for correction, and distribute copies of the NCR form to the auditee, responsible party, PMT Program Director, and project files. The PMT Program Director will follow up with the responsible party to implement the corrective action in a timely manner. The PMT QA/QC Manager or qualified auditor will verify the

implementation and effectiveness of the proposed corrective action(s), and maintain a record of disposition of the NCR.

The PMT QA/QC Manager shall maintain an NCR Log that tracks the NCR number, relevant requirement, likely cause of nonconformance, proposed corrective action, responsible party, correction due date, status, date issued, and date closed (verified) (see **Exhibit QP 12.01-2)**. The information provided in the NCR Log may be used to perform quantitative and qualitative analyses of the nonconformances, their cause and corrective action, and to identify and implement mitigative measures as appropriate.

In the event that a corrective action is not implemented in a timely manner, the original NCR shall be noted "delinquent" and reissued, with notification sent to the responsible party, their immediate supervisor on the project, and the responsible firm's management representative.

4. Records

The following quality records shall be retained in the project files and made available for subsequent quality audits and surveillance reviews:

- Original Nonconformance Report(s), signed and dated by auditor, auditee, PMT QA/QC Manager, and PMT Program Director
- NCR Log

California High-Speed Train Project Nonconformance Report (NCR)	
Audited Operations:	**NCR No.:**
Auditor Name(s):	**Ref:**
Auditor's Signature:	**Date:**
Auditee(s):	
Description of Design Element Audited:	
Description of Nonconformance:	
Auditee's Assessment of Likely Cause: **Auditee's Signature: _____**	
Recommended Corrective Action:	
Action By Date: _____	
Recommended by QA/QC Manager: _____ Signature Date:_____	**Agreed By PMT Program Director:** _____ _ Signature
Distribution: Auditee, Responsible Party(ies), PMT Program Director, project files	

Exhibit QP 12.01-1 – Nonconformance Report Form

California High-Speed Train Project NCR Log		
PMT Program Director:	**PMT QA/QC Manager:**	**Date:**

NCR No.	Relevant Requirement	Likely Cause	Corrective Action	Due Date	Status	Date Issued	Date Closed

Distribution:

PMT Program Director
PMT PMT QA/QC Manager
Project files

Exhibit QP 12.01-2 – NCR Log

California High-Speed Train Project		Procedure No. QP 12.02
Title: Observations and Preventive Actions		Revision No.: 1
Prepared by: PMT QA/QC Manager	Approved by: PMT Program Director	Effective Date: 3/10/10

5. Purpose and Scope

Observations are indications of potential problems and/or opportunities for improvement. Preventive actions are measures taken to address an observation and/or avert a potential nonconformance. Examples of preventive actions include changes made to the Quality Plan resulting from the following:

- Analyses of internal and external audit data
- Good practices (lessons learned)

This procedure describes the responsibilities and process for documenting and tracking observations and preventive actions.

6. Responsibilities

The PMT QA/QC Manager is responsible for documenting the observations, identifying the preventive action(s) and the responsible party(ies), verifying the implementation and effectiveness of the preventive action(s), and maintaining a record of disposition.

The PMT Program Director is responsible for implementation of the preventive action(s).

7. Process

When an issue has been identified that is deemed an unacceptable attainment of quality or insufficient evidence of quality control in the design work, an Observation shall be prepared **(see Exhibit QP 12.02-1)**

Immediately upon identification of a potential quality problem, the individual detecting the issue shall initiate an Observation by describing the deviation from acceptable quality on the Observation form and forwarding it to the PMT QA/QC Manager. The PMT QA/QC Manager or a qualified auditor will identify a responsible party to address the issue, assist in determining the appropriate preventive action, verify the implementation and effectiveness of the proposed preventive action, maintain a record of disposition of the observation, and distribute copies of the Observation form to the responsible party, PMT Program Director, PMT QA/QC Manager, and project files. The PMT Program Director will follow up with the responsible party to implement the preventive action in a timely manner. The PMT QA/QC Manager or qualified auditor will verify the implementation and effectiveness of the proposed corrective action(s), and maintain a record of disposition of the Observation.

8. Records

The original Observation(s), signed and dated by auditor, PMT QA/QC Manager, and the PMT Program Director, shall be retained in the project files and made available for subsequent quality audits and surveillance reviews.

California High-Speed Train Project Observation	
Audited Operations:	**OBS No.**
Auditor's Name(s):	**Ref.:**
Auditor's Signature:	**Date:**
Description of Design Element Observed:	
Description of Observation:	
Recommended Preventive Action	
Action By Date: _____	
Recommended by PMT QA/QC Manager: _____ Signature Date:	**Agreed By PMT Program Director:** _____ Signature Date:

Exhibit QP 12.02-1 – Observation

California High-Speed Train Project		Procedure No. QP 14.01
Title: Regional Consultants Quality Plan Evaluation		Revision No.: 1
Prepared by: PMT QA/QC Manager	Approved by: PMT Program Director	Effective Date: 3/10/10

1. Purpose and Scope

This procedure provides instructions for performing Quality Plan evaluations of Regional Consultants for the CHSTP.

2. Responsibility

The Regional Consultant Project Manager is responsible for preparation and submittal of their respective Quality Plan in accordance with the contract requirements.

The PMT Regional Manager is responsible for transmitting the Regional Consultant's Quality Plan to the PMT QA/QC Manager for review, and for providing final acceptance of the Quality Plan.

The PMT QA/QC Manager is responsible for the review and evaluation of Regional Consultants' Quality Plans to ensure compliance with the contract requirements.

3. Process

The PMT QA/QC Manager evaluates the Regional Consultant Quality Plan for compliance with the contract requirements. This review shall be performed in cooperation with the Regional Manager.

The results of the review shall be documented. **Exhibit QP 14.01-1**, Regional Consultant Quality Plan Evaluation Summary Checklist, may be used. Comments resulting from the review shall be transmitted back to the Regional Manager, categorized as follows:

- Acceptable
- Acceptable with comments
- Not acceptable (submittal does not fully comply with contract requirements – revise and resubmit)

The Regional Manager shall initiate action as necessary to obtain resolutions from the Regional Consultant.

4. Records

Records of Regional Consultant Quality Plan evaluations shall be retained in the project files and made available for audit.

California High-Speed Train Project
Regional Consultant Quality Plan Evaluation
Summary Checklist

Regional Consultant:	
Corridor Section:	
Phase of Work:	
Document Reviewed:	
Reviewer:	Date:

Relevant Quality Elements:

1. Management Responsibility ❑
2. Documented Quality Management System ❑
3. Design Control ❑
4. Document Control ❑
5. Purchasing ❑
6. Product Identification and Traceability ❑
7. Process Control ❑
8. Inspection and Testing ❑
9. Inspection, Measuring, and Test Equipment ❑
10. Inspection and Test Status ❑
11. Nonconformance ❑
12. Corrective Action ❑
13. Quality Records ❑
14. Quality Audits ❑
15. Training ❑

Comments:

Distribution:

Program Director Anthony Daniels

Regional Manager:

PMT Project Files

Quality Element	Yes	No	N/A	Quality Plan Reference
1. Organization				
Does the Quality Plan define and document a quality policy, and communicate, implement, and maintain that policy at all levels of the Regional Consultant organization?	❑	❑	❑	
Does the Quality Plan designate a [management] representative who shall have defined authority and responsibility for ensuring that the quality policy is implemented and maintained?	❑	❑	❑	
Does the Quality Plan identify those persons responsible for the quality assurance function?	❑	❑	❑	
Does the Quality Plan define in writing the responsibility, authority and interrelation of the management representative and those responsible for ensuring quality assurance?	❑	❑	❑	
2. Quality Program				
Does the Quality Plan include written procedures and instructions for activities affecting quality in design, procurement, manufacturing, and construction as applicable to the work being performed?	❑	❑	❑	
Do the procedures identify the purpose/scope, relevant references, responsibilities, processes to ensure quality, and records needed?	❑	❑	❑	
3. Design Control				
Does the Quality Plan include procedures to control and verify the design, to ensure that the design criteria, other specified requirements, and requirements of the relevant regulatory agencies are met?	❑	❑	❑	
Does the Quality Plan provide for controlling design changes through project completion?	❑	❑	❑	
Do the design quality procedures identify who has responsibility for the different design parts, and who has the QA responsibility for design?	❑	❑	❑	

Quality Element	Yes	No	N/A	Quality Plan Reference
Do the design quality procedures identify the various organizational interfaces required between various groups producing and commenting on the design, and specify the information to be documented, transmitted and regularly reviewed?	❑	❑	❑	
4. Document Control				
Does the Quality Plan include procedures for control of project documents and data which ensure that all relevant documents are current and available to all users who require them?	❑	❑	❑	
5. Purchasing				
Does the Quality Plan indicate that/how subconsultants and/or vendors are selected on the basis of their being able to meet the contract requirements?	❑	❑	❑	
Does the Quality Plan define quality requirements of subconsultants and/or vendors?	❑	❑	❑	
6. Product Identification and Traceability				
Does the Quality Plan include measures for identifying and controlling work products (calculations, drawings, studies/reports, specifications) to prevent the use of incorrect or superseded items and to ensure that only the most current items are used?	❑	❑	❑	
7. Process Control				
Does the Quality Plan include work instructions where such are needed to ensure quality, use of suitable production and installation equipment, a suitable working environment, personnel qualifications, and conformance with referenced standards/codes?	❑	❑	❑	
Does the Quality Plan include provisions for monitoring and controlling of processes and product characteristics during production and installation?	❑	❑	❑	

Quality Element	Yes	No	N/A	Quality Plan Reference
8. Inspection and Testing				
Does the Quality Plan include inspection and testing procedures as necessary to verify quality of purchased products or services (including software, subconsultant deliverables) and document results? (The extent of receiving inspection can vary with the amount of inspection at the source, the safety criticality of the product, and the confidence in the quality procedures of the supplier.)	❑	❑	❑	
9. Inspection, Measuring and Test Equipment				
Does the Quality Plan include procedures for identification, control, calibration and maintenance (including timely recalibration) of inspection, measuring and test equipment?	❑	❑	❑	
10. Inspection and Test Status				
Does the Quality Plan include provisions for identifying the inspection and test status of work during production and installation, to ensure that only work that has passed the required inspections and tests is accepted/used? (The inspection and test status of planning and design documents should be identified by suitable means that indicate the conformance or nonconformance of product with regard to checking and reviews performed. The status of completed, tested and inspected construction should be kept as an ongoing record in the daily inspection reports. Nonconforming materials or construction should be recorded with location noted on inspection reports or nonconformance reports as applicable.)	❑	❑	❑	
11. Nonconformance				
Does the Quality Plan include procedures to identify, assess, resolve, document, and control nonconforming work, in order to ensure that such work is not inadvertently used or installed?	❑	❑	❑	

Quality Element	Yes	No	N/A	Quality Plan Reference
12. Corrective Action				
Does the Quality Plan include corrective action procedures to investigate the cause of nonconforming work and the corrective action needed to prevent recurrence; and to implement and record changes in procedures resulting from corrective action?	❑	❑	❑	
13. Quality Records				
Does the Quality Plan define quality records, and provide for maintenance of quality records, including responsibility for production and collection, and responsibility for indexing, filing, storage, maintenance, and disposition of quality records?	❑	❑	❑	
14. Quality Audits				
Does the Quality Plan include provisions for scheduling and conducting internal audits by qualified personnel, to ensure that the elements of the quality management system are functioning as intended?	❑	❑	❑	
15. Training				
Does the Quality Plan include procedures for identifying the training needs and provide for the training of all personnel performing activities affecting quality?	❑	❑	❑	

Exhibit QP 14.01-1 - Regional Consultant Quality Plan Evaluation Summary Checklist

California High-Speed Train Project		Procedure No. QP 14.02
Title: PMT Internal Quality Audits		Revision No.: 1
Prepared by: PMT QA/QC Manager	Approved by: PMT Program Director	Effective Date: 3/10/10

1. Purpose and Scope

This procedure describes the responsibilities and process for conducting internal quality audits, and includes the requirements for planning, scheduling, conducting, and reporting the audit results of PMT Quality Plan implementation.

2. Responsibility

The PMT QA/QC Manager is responsible for the performance of internal quality audits to verify compliance with the PMT management, administrative, and technical procedures established for the Project. These audits may be performed by the PMT QA/QC Manager or by someone assigned for that function who is qualified as an auditor (reference QP 15.02).

3. Process

Internal quality audits will be conducted regularly throughout the project duration; the frequency and timing of audits will be coordinated with the project activities and anticipated deliverable milestones. Such audits may occur at any where project-related work is being performed.

The PMT QA/QC Manager shall develop and maintain an internal quality audit schedule for distribution to the PMT Program Director and Operations Manager on a semi-annual basis. In developing the internal quality audit schedule, the following factors shall be considered:

- Key project/deliverable milestones
- Critical nature of the work being performed
- Problem potential
- Time interval preceding audit to ensure timely verification of implementation and effectiveness of previously identified corrective/preventive actions

The internal quality audit schedule shall include a description of the anticipated project activities/deliverables to be reviewed, the anticipated timeframe for conducting the audit, the likely auditee(s), and the location of the audit. **Exhibit QP 14.02-1** may be used.

Audit checklists developed by the PMT QA/QC Manager and approved by the PMT Program Director will be used for each internal quality audit. These checklists identify the quality requirements to be audited, the applicable reference documents, and the method of verification. Space will be provided for the auditor to make notes during the audit. In preparing the checklist, the PMT QA/QC Manager shall consider the information obtained in previous audits, including verification and effectiveness of corrective actions. A sample checklist is included as **Exhibit QP 14.02-2**.

Upon completion of an audit, the PMT QA/QC Manager will prepare an Internal Quality Audit Report that includes the following:

- The completed Internal Quality Audit Report and Checklist, signed/initialed and dated by the auditor, PMT QA/QC Manager, and PMT Program Director

- NCRs, if any, that resulted from the audit
- Observations, if any, that resulted from the audit

A copy of each completed Internal Quality Audit Report will be distributed to the PMT Program Director and the individual(s) responsible for the activity audited.

4. Records

The original Internal Quality Audit Report for each audit, signed and dated by auditor, PMT QA/QC Manager and PMT Program Director, shall be retained in the project files and made available for subsequent quality audits and surveillance reviews.

California High-Speed Train Project PMT Internal Quality Audit Schedule			
Auditor(s):	**PMT QA/QC Manager:**		**Date:**
Anticipated Activities/Deliverables to be Audited	**Anticipated Audit Timeframe**	**Likely Auditee(s)**	**Audit Location**

Distribution: PMT Program Director
Project files

Exhibit QP 14.02-1 – Internal Quality Audit Schedule

California High-Speed Train Project
PMT Internal Quality Audit Report and Checklist

Auditor: _____ Signature:_____ Audit No.:_____

Auditee: _____ Signature: _____ Date:_____

Auditee: _____ Signature: _____ No. of NCRs _____

Auditee: _____ Signature: _____ No. of OBSs _____

Comments:

Distribution:

Program Director	Anthony Daniels
Auditee(s)	
Auditee(s)	
Project Files	

No.	Ref.	Question	Yes	No	Obs	N/A	Notes/Evidence
1	Ch. 2	Are the PMT members familiar with the quality objectives?	❑	❑	❑	❑	
2	Ch. 4	Are project documents being logged and controlled in accordance with the PMP requirements?	❑	❑	❑	❑	
3	QP 2.01	Do all PMT members have access to the Quality Plan?	❑	❑	❑	❑	
4	QP 2.01	Are revisions to the Quality Plan being controlled?	❑	❑	❑	❑	
5	QP 2.01	Are records of distribution of the Quality Plan being maintained?	❑	❑	❑	❑	
6	QP 3.01	Have the Environmental Program Manager and Engineering Manager prepared and distributed investigation plans, as appropriate?	❑	❑	❑	❑	
7	QP 3.02	Has the responsible (Environmental Program or Subsystem) Manager assigned qualified personnel (Originator and Checker) to prepare and check the environmental methodology/technical memorandum/design criteria?	❑	❑	❑	❑	
8	QP 3.02	Was the Checker someone other than the Originator?	❑	❑	❑	❑	
9	QP 3.02	Are Checker's comments being resolved and incorporated into the original document as appropriate?	❑	❑	❑	❑	

No.	Ref.	Question	Yes	No	Obs	N/A	Notes/Evidence
10	QP 3.02	Is the completed document approved by the responsible Manager?	❑	❑	❑	❑	
11	QP 3.02	Are revisions to completed document being prepared, checked, reviewed, and approved in the same manner as required for the original document?	❑	❑	❑	❑	
12	QP 3.03	Has the responsible manager (Railroad Operations Manager or Subsystem Manager) assigned qualified Personnel (Originator and Checker) to perform calculations?	❑	❑	❑	❑	
13	QP 3.03	Has the responsible manager identified project discipline-related criteria that are applicable to a calculation?	❑	❑	❑	❑	
14	QP 3.03	Do calculations include the project name; subject of the calculations; known input data; design assumptions; references and back-up materials, if any; and dimensional units?	❑	❑	❑	❑	
15	QP 3.03	Are calculations being checked prior to any major reliance on the outcome?	❑	❑	❑	❑	
16	QP 3.03	Was the Checker someone other than the Originator?	❑	❑	❑	❑	
17	QP 3.03	Are Checker's comments being resolved and incorporated into the original calculations as appropriate?	❑	❑	❑	❑	

No.	Ref.	Question	Yes	No	Obs	N/A	Notes/Evidence
18	QP 3.03	Are completed calculations being approved by the responsible Manager?	❑	❑	❑	❑	
19	QP 3.03	Are revisions to completed calculations being prepared, checked, reviewed, and approved in the same manner as required for the original calculations?	❑	❑	❑	❑	
20	QP 3.03	Are revisions to completed calculations being identified by a unique sequential number or date to distinguish the revised document from the original calculations?	❑	❑	❑	❑	
21	QP 3.03	Are the completed calculations, signed/initialed and dated by the Originator, Checker, and responsible Manager, being retained in the project files?	❑	❑	❑	❑	
22	QP 3.04	Has the responsible Subsystem Manager assigned the Originator and Checker to prepare and check a drawing?	❑	❑	❑	❑	
22	QP 3.04	Are drawings being checked by the Checker?	❑	❑	❑	❑	
23	QP 3.04	Are drawings being corrected by the Drafter (i.e., does the completed drawing reflect mark-ups on the final check print)?	❑	❑	❑	❑	
24	QP 3.04	Are drawings being approved by the Subsystem Manager?	❑	❑	❑	❑	

No.	Ref.	Question	Yes	No	Obs	N/A	Notes/Evidence
25	QP 3.04	Are Final Check Prints of the drawings, signed/initialed and dated by the Originator, Checker, Drafter, and Subsystem Manager, being retained in the project files, and are the names/initials on the Final Check Prints consistent with what is shown in the drawing title blocks?	❑	❑	❑	❑	
26	QP 3.04	Are the completed drawings retained in the project files?	❑	❑	❑	❑	
27	QP 3.04	Are revisions to completed drawings being prepared, checked, reviewed, and approved in the same manner as required for the original drawings?	❑	❑	❑	❑	
28	QP 3.04	Are revisions to completed drawings being identified by a unique sequential number or date to distinguish the revised document from the original drawings?	❑	❑	❑	❑	
29	QP 3.05	Has the Subsystem Manager assigned the Originator and Checker to prepare and check specifications?	❑	❑	❑	❑	
30	QP 3.05	Are the specifications consistent with project requirements?	❑	❑	❑	❑	
31	QP 3.05	Are specifications being checked by the Checker – someone other than the Originator?	❑	❑	❑	❑	
32	QP 3.05	Are specification sections being approved by the Subsystem Manager?	❑	❑	❑	❑	

No.	Ref.	Question	Yes	No	Obs	N/A	Notes/Evidence
33	QP 3.05	Are revisions to completed specifications being prepared, checked, reviewed, and approved in the same manner as required for the original specifications?	❑	❑	❑	❑	
34	QP 3.05	Are revisions to completed specifications being identified by a unique sequential number or date to distinguish the revised document from the original specifications?	❑	❑	❑	❑	
35	QP 3.05	Are review copies of specification sections, signed/initialed and dated by the Originator, Checker, and Subsystem Manager, being retained in the project files?	❑	❑	❑	❑	
36	QP 3.05	Are the completed specifications for retained in the project files?	❑	❑	❑	❑	
37	QP 3.05	Has the Subsystem Manager verified that the specification sections consistent with respect to format, content, structure and organization within and among subsystems?	❑	❑	❑	❑	
38	QP 3.06	Has the Staging/ Procurement Manager assigned the Originator and Checker to prepare and check general and supplemental conditions?	❑	❑	❑	❑	
39	QP 3.06	Are the specifications consistent with project requirements?	❑	❑	❑	❑	

No.	Ref.	Question	Yes	No	Obs	N/A	Notes/Evidence
40	QP 3.06	Are specifications being checked by the Checker – someone other than the Originator?	❑	❑	❑	❑	
41	QP 3.06	Are specification sections being approved by the Staging / Procurement Manager?	❑	❑	❑	❑	
42	QP 3.06	Are revisions to completed specifications being prepared, checked, reviewed, and approved in the same manner as required for the original specifications?	❑	❑	❑	❑	
43	QP 3.06	Are revisions to completed specifications being identified by a unique sequential number or date to distinguish the revised document from the original specifications?	❑	❑	❑	❑	
44	QP 3.06	Are review copies of specification sections, signed/initialed and dated by the Originator, Checker, and Subsystem Manager, being retained in the project files?	❑	❑	❑	❑	
45	QP 3.06	Are the completed specifications for retained in the project files?	❑	❑	❑	❑	
46	QP 3.07	Has the Regulatory Approvals Manager maintained a listing of SOTR text to be included in the RPA Petition, associating the SOTR text with the related federal regulation and/or CHSTP systems requirements?	❑	❑	❑	❑	

No.	Ref.	Question	Yes	No	Obs	N/A	Notes/Evidence
47	QP 3.07	Has the responsible Subsystem Manager assigned qualified personnel (Originator and Checker) to prepare and check the SOTR text for their subsystem?	❑	❑	❑	❑	
48	QP 3.07	Was the Checker someone other than the Originator?	❑	❑	❑	❑	
49	QP 3.07	Are Checker's comments being resolved and incorporated into the original document as appropriate?	❑	❑	❑	❑	
50	QP 3.07	Is the completed SOTR text approved by the Subsystem Manager?	❑	❑	❑	❑	
51	QP 3.07	Are revisions to completed SOTR text being prepared, checked, reviewed, and approved in the same manner as required for the original document?	❑	❑	❑	❑	
52	QP 3.07	Are review copies of the SOTR text, signed/initialed and dated by the Originator, Checker, and Subsystem Manager being retained in the project files?	❑	❑	❑	❑	
53	QP 3.07	Are record copies of SOTR text for inclusion in the Petition for Proposed Rule of Particular Applicability, as submitted to the Authority, being retained in the project files?	❑	❑	❑	❑	

No.	Ref.	Question	Yes	No	Obs	N/A	Notes/Evidence
54	QP 3.08	Has the PMT Cost Estimator established the Work Breakdown Structure that will be applied to cost estimating and reporting?	❑	❑	❑	❑	
55	QP 3.08	Has the PMT Cost Estimator developed a list of unit cost elements with associated unit of measure and unit price for each of the construction activities that will be identified and quantified in the form of design documents?	❑	❑	❑	❑	
56	QP 3.08	Do the project files contain records of the Regional Consultants' construction quantities and basis of estimate?	❑	❑	❑	❑	
57	QP 3.08	Do the project files contain records of the Regional Consultants' right-of-way estimates?	❑	❑	❑	❑	
58	QP 3.08	Was the rolling stock procurement estimate prepared and checked in accordance with the requirements of QP 3.02 and QP 3.03 as appropriate?	❑	❑	❑	❑	
59	QP 3.08	Do the project files contain records of the rolling stock procurement estimate?	❑	❑	❑	❑	

No.	Ref.	Question	Yes	No	Obs	N/A	Notes/Evidence
60	QP 3.08	Do the project files contain a review copy of the program-wide cost estimate, including subsequent revisions, signed/initialed and dated by the PMT Cost Estimator and PMT System Integration Manager?	❑	❑	❑	❑	
61	QP 3.08	Do the project files contain a record of changes and adjustments as a result of an estimate review performed by subject matter experts, if applicable?	❑	❑	❑	❑	
62	QP 3.08	Do the project files contain a record copy of the draft program-wide estimate, including subsequent revisions, as submitted to the Authority?	❑	❑	❑	❑	
63	QP 3.09	Do the project files contain a record copy of the program-wide estimate, including subsequent revisions, as approved by the Authority?	❑	❑	❑	❑	
64	QP 3.09	Do the project files contain documentation/lists of interface requirements with identification of responsible Subsystem Manager?	❑	❑	❑	❑	
65	QP 3.09	Do the project files contain comments and responses as a result of Subsystem Manager design interface reviews?	❑	❑	❑	❑	

No.	Ref.	Question	Yes	No	Obs	N/A	Notes/Evidence
66	QP 3.10	Do the project files contain PMT (Regional Manager, Subsystem Managers, and System Integration Manager) review comments and/or marked review documents as a result of Regional Consultant section reviews?	❑	❑	❑	❑	
67	QP 3.10	Do the project files contain Regional Consultants' record of the comments, responses, disposition and, where appropriate, reviewer concurrence?	❑	❑	❑	❑	
68	QP 3.10	Do the project files contain Regional Consultants' record of verification of the review comments in subsequent submittals, as appropriate?	❑	❑	❑	❑	
69	3.11	Do the project files contain a record of the comments, responses, disposition and, where appropriate, reviewer concurrence as a result of external design reviews?	❑	❑	❑	❑	
70	3.11	Do the project files contain a record of verification of incorporation of the review comments in subsequent submittals, as appropriate?	❑	❑	❑	❑	
71	QP 9.01	Have the PMT Task Leads inspected and calibrated equipment, as appropriate?	❑	❑	❑	❑	

No.	Ref.	Question	Yes	No	Obs	N/A	Notes/Evidence
72	QP 9.01	Are records of equipment calibration being retained in the project files, as appropriate?	❑	❑	❑	❑	
73	QP 12.01	Are NCRs being prepared, as appropriate?	❑	❑	❑	❑	
74	QP 12.01	Is the auditee identifying the likely cause of the nonconformance?	❑	❑	❑	❑	
75	QP 12.01	Is the PMT QA/QC Manager identifying corrective actions, responsible parties, and timelines for correction?	❑	❑	❑	❑	
76	QP 12.01	Are corrective actions being implemented by responsible parties within the timeline?	❑	❑	❑	❑	
77	QP 12.01	Is the PMT QA/QC Manager verifying the effectiveness of the corrective actions, as appropriate?	❑	❑	❑	❑	
79	QP 12.01	Are the NCRs signed and dated by the auditor, auditee, PMT QA/QC Manager, and PMT Program Director?	❑	❑	❑	❑	
80	QP 12.02	Are Observations being documented as appropriate?	❑	❑	❑	❑	
81	QP 12.02	Is the PMT QA/QC Manager identifying preventive actions and responsible parties?	❑	❑	❑	❑	
82	QP 12.02	Are the Observations signed and dated by the auditor, PMT QA/QC Manager, and PMT Program Director?	❑	❑	❑	❑	
83	QP 14.01	Are records of Regional Consultant Quality Plan evaluations being retained in the project files?	❑	❑	❑	❑	

No.	Ref.	Question	Yes	No	Obs	N/A	Notes/Evidence
84	QP 14.02	Are internal audits being conducted at appropriate intervals throughout the project duration?	❑	❑	❑	❑	
85	QP 14.02	Are audit checklists, approved by the PMT Program Director, being used for each audit?	❑	❑	❑	❑	
86	QP 14.02	Are Audit Reports being distributed to the GEC Project Manager and the Discipline Task Lead(s) responsible for the operation audited?	❑	❑	❑	❑	
87	QP 14.02	Are Audit Reports being retained in the project files?	❑	❑	❑	❑	
88	QP 14.02	Are third party Quality Surveillance Audit Reports being retained in the project files?	❑	❑	❑	❑	
89	QP 14.02	Are corrective and preventive actions arising from Quality Surveillance Audits being implemented as appropriate?	❑	❑	❑	❑	
90	QP 14.02	Are other quality surveillance audit reports being retained in the project files?	❑	❑	❑	❑	
91	QP 14.02	Are corrective and preventive actions arising from other quality surveillance audits being implemented as appropriate?	❑	❑	❑	❑	

No.	Ref.	Question	Yes	No	Obs	N/A	Notes/Evidence
91	QP 14.03	Are quality surveillance audits of the Regional Consultants being conducted regularly throughout the project duration, coordinated with the project activities and anticipated milestones?	❑	❑	❑	❑	
92	QP 14.03	Are Audit Reports, signed and dated by the auditor, PMT QA/QC Manager and Regional Consultant Manager, being retained in the project files?	❑	❑	❑	❑	
93	QP 15.01	Have the responsible managers educated their staff about the project-specific QA/QC requirements?	❑	❑	❑	❑	
94	QP 15.01	When requested by the Authority, PMT Program Director, and/or PMT QA/QC Manager, has supplemental QA/QC training been conducted?	❑	❑	❑	❑	
95	QP 15.01	Is a copy of the QA/QC training materials retained in the project files?	❑	❑	❑	❑	
96	QP 15.01	Are sign-in sheets for attendance at QA/QC training sessions retained in the project files?	❑	❑	❑	❑	

Exhibit QP 14.02-2 – Internal Quality Audit Report and Checklist

California High-Speed Train Project		Procedure No. QP 14.03
Title: Quality Surveillance Audits of Regional Consultants		Revision No.: 1
Prepared by: PMT QA/QC Manager	Approved by: PMT Program Director	Effective Date: 3/10/10

1. Purpose and Scope

This procedure describes the responsibilities and process for conducting quality surveillance audits of Regional Consultants, and includes the requirements for planning, scheduling, conducting, and reporting the audit results of Regional Consultants' Quality Plan implementation.

2. Responsibilities

The PMT QA/QC Manager is responsible for the performance of quality surveillance audits to verify compliance with the management, administrative, and technical procedures established for the Project. These audits may be performed by the PMT QA/QC Manager or by someone assigned for the function who is qualified as an auditor.

The Regional Consultant Project Manager is responsible for implementation of the corrective and preventive action(s), as appropriate.

3. Process

Quality surveillance audits will be conducted regularly throughout the project duration; the frequency and timing of audits will be coordinated with the project activities and anticipated milestones. Such audits will occur at the Regional Consultant's office where project-related work is primarily being performed. **Exhibit QP 14.03-1** may be used.

Audit plans and checklists developed by the PMT QA/QC Manager will be used for each audit, identifying the quality requirements to be audited, the applicable reference documents, and the method of verification. Space will be provided for the auditor to make notes during the audit. In preparing the audit plan and checklist, the PMT QA/QC Manager shall consider the information obtained in previous audits, including verification and effectiveness of corrective actions. **Exhibit QP 14.03-2** may be used.

Upon completion of an audit, the PMT QA/QC Manager will prepare an Audit Report that includes the following:

- The completed surveillance audit report, signed/initialed and dated by the auditor and PMT QA/QC Manager
- Nonconformances, if any, that resulted from the audit
- Observations, if any, that resulted from the audit

A copy of each completed surveillance audit report will be distributed to the PMT Regional Manager, the Regional Consultant Project Manager, the Regional Consultant QA/QC Manager, and the individual(s) responsible for the activity audited.

The Regional Consultant Project Manager will follow up with the responsible party(ies) to implement corrective and preventive action(s) in a timely manner.

4. Records

The original surveillance audit report for each audit, signed and dated by auditor, PMT QA/QC Manager and Regional Consultant Project Manager, shall be retained in the project files and made available for subsequent quality audits and surveillance reviews.

California High-Speed Train Project Regional Consultants Surveillance Audit Schedule				
PMTQA/QC Manager:				**Date:**
Section	**Regional Manager**	**Regional Consultant**	**Audit Date**	**Audit Location**
Palmdale to Los Angeles	A. Althrop	HMM		
Los Angeles to Anaheim	B. Armistead	STV		
Los Angeles to San Diego	J. Martinez	HNTB		
Fresno to Palmdale	T. Tracy	URS		
Sacramento to Fresno	T. Tracy/ P. Valentine	AECOM		
Altamont Pass	J. Harrison	AECOM		
San Jose to Bakersfield	G. Kennerley	Parsons		
San Francisco to San Jose	D. Spaethling	HNTB		

Exhibit QP 14.03-1 – Regional Consultants Surveillance Audit Schedule

California High-Speed Train Project
Regional Consultant Surveillance Audit Report and Checklist

Regional Consultant:

Section:

Regional Consultant PM:

Auditor: _____ Signature: _____ Audit No.:_____

Auditee: _____ Signature: _____ Date:_____

Auditee: _____ Signature: _____ No. of NCRs _____

Auditee: _____ Signature: _____ No. of OBSs _____

Comments:

Distribution:

Program Director Anthony Daniels
Auditee(s)
Project Files

No.	Question	Yes	No	Obs	N/A	Notes/Evidence
Quality System						
1	Are the Regional Consultant members familiar with the quality objectives?	❑	❑	❑	❑	
2	Do all PMT members have access to the QA/QC Plan?	❑	❑	❑	❑	
3	Are revisions to the QA/QC Plan being controlled?	❑	❑	❑	❑	
4	Are records of distribution of the QA/QC Plan being maintained?	❑	❑	❑	❑	
Reports/Studies						
5	Does the QA/QC Plan specify the quality requirements for preparation of reports/studies (e.g., technical studies, environmental document)?	❑	❑	❑	❑	
6	Are reports/studies being prepared and checked in accordance with the QA/QC Plan requirements?	❑	❑	❑	❑	
7	Are revisions to completed reports/studies being prepared, checked, reviewed, and approved in the same manner as required for the original document?	❑	❑	❑	❑	
8	Are records of report/study reviews being retained in the project files?	❑	❑	❑	❑	
9	Are reports/studies being controlled (product identification and traceability, distribution) in accordance with the QA/QC Plan requirements?	❑	❑	❑	❑	

No.	Question	Yes	No	Obs	N/A	Notes/Evidence
Calculations						
10	Does the QA/QC Plan specify the quality requirements for preparation of design calculations?	❑	❑	❑	❑	
11	Are calculations being prepared and checked in accordance with the QA/QC Plan requirements?	❑	❑	❑	❑	
12	Are revisions to completed calculations being prepared, checked, reviewed, and approved in the same manner as required for the original document?	❑	❑	❑	❑	
13	Are records of calculation checks being retained in the project files?	❑	❑	❑	❑	
14	Are calculations being controlled (product identification and traceability, distribution) in accordance with the QA/QC Plan requirements?	❑	❑	❑	❑	
Design Drawings						
15	Does the QA/QC Plan specify the quality requirements for preparation of design drawings?	❑	❑	❑	❑	
16	Are drawings being prepared and checked in accordance with the QA/QC Plan requirements?	❑	❑	❑	❑	
17	Are revisions to completed drawings being prepared, checked, reviewed, and approved in the same manner as required for the original document?	❑	❑	❑	❑	
18	Are records of drawing reviews being retained in the project files?	❑	❑	❑	❑	

No.	Question	Yes	No	Obs	N/A	Notes/Evidence
19	Are drawings being controlled (product identification and traceability, distribution) in accordance with the QA/QC Plan requirements?	❑	❑	❑	❑	
Specifications						
20	Does the QA/QC Plan specify the quality requirements for preparation of specifications?	❑	❑	❑	❑	
21	Are specifications being prepared and checked in accordance with the QA/QC Plan requirements?	❑	❑	❑	❑	
22	Are revisions to completed specifications being prepared, checked, reviewed, and approved in the same manner as required for the original document?	❑	❑	❑	❑	
23	Are records of specifications reviews being retained in the project files?	❑	❑	❑	❑	
24	Are specifications being controlled (product identification and traceability, distribution) in accordance with the QA/QC Plan requirements?	❑	❑	❑	❑	
Cost Estimates						
25	Does the QA/QC Plan specify the quality requirements for preparation of construction cost estimates?	❑	❑	❑	❑	
26	Does the QA/QC Plan specify the quality requirements for right-of-way cost estimates?	❑	❑	❑	❑	

No.	Question	Yes	No	Obs	N/A	Notes/Evidence
27	Are right-of-way and construction cost estimates being prepared and checked in accordance with the QA/QC Plan requirements?	❑	❑	❑	❑	
28	Are revisions to completed right-of-way and construction cost estimates being prepared, checked, reviewed, and approved in the same manner as required for the original document?	❑	❑	❑	❑	
29	Are records of estimate reviews being retained in the project files?	❑	❑	❑	❑	
30	Are estimates being controlled (product identification and traceability, distribution) in accordance with the QA/QC Plan requirements?	❑	❑	❑	❑	
Design Reviews						
31	Does the QA/QC Plan specify the quality requirements for performing internal design reviews?	❑	❑	❑	❑	
32	Are design reviews being conducted in accordance with the QA/QC Plan requirements?	❑	❑	❑	❑	
33	Do the project files contain PMT (Regional Manager, Subsystem Managers, and System Integration Manager) review comments and/or marked review documents as a result of PMT reviews of Regional Consultant's design?	❑	❑	❑	❑	

No.	Question	Yes	No	Obs	N/A	Notes/Evidence
34	Do the project files contain a record of the comments, responses, disposition and, where appropriate, reviewer concurrence resulting from internal design reviews and/or PMT or other external design reviews?	❑	❑	❑	❑	
35	Do the project files contain a record of verification of the internal/external review comments in subsequent submittals, as appropriate?	❑	❑	❑	❑	
Subconsultant Deliverables						
36	Does the QA/QC Plan specify the quality requirements for review of subconsultant deliverables?	❑	❑	❑	❑	
37	Are subconsultant deliverables being reviewed in accordance with the QA/QC Plan requirements?	❑	❑	❑	❑	
38	Are records of review of subconsultant deliverables being retained in the project files, as appropriate?	❑	❑	❑	❑	
Equipment Calibration and Maintenance						
39	Does the QA/QC Plan specify the quality requirements for equipment calibration and maintenance?	❑	❑	❑	❑	
40	Is equipment being calibrated and maintained in accordance with the QA/QC Plan requirements?	❑	❑	❑	❑	
41	Are records of equipment calibration being retained in the project files, as appropriate?	❑	❑	❑	❑	

No.	Question	Yes	No	Obs	N/A	Notes/Evidence
Nonconformances and Corrective Actions						
42	Does the QA/QC Plan specify the quality requirements for addressing nonconformances?	❑	❑	❑	❑	
43	Are nonconformances being addressed in accordance with the QA/QC Plan requirements?	❑	❑	❑	❑	
44	Are corrective actions being implemented by responsible parties within the timeline?	❑	❑	❑	❑	
45	Are records of nonconformance, corrective action, and effectiveness being maintained in the project files?	❑	❑	❑	❑	
Observations and Preventive Actions						
46	Does the QA/QC Plan specify the quality requirements for implementing preventive actions?	❑	❑	❑	❑	
47	Are preventive actions being implemented in accordance with the QA/QC Plan requirements?	❑	❑	❑	❑	
48	Are records of preventive action and effectiveness being maintained in the project files?	❑	❑	❑	❑	
Internal Quality Audits						
49	Does the QA/QC plan specify the quality requirements for conducting internal quality audits?	❑	❑	❑	❑	
50	Are internal audits being conducted at in accordance with the QA/QC Plan requirements?	❑	❑	❑	❑	
51	Are records of internal audits being retained in the project files?	❑	❑	❑	❑	

No.	Question	Yes	No	Obs	N/A	Notes/Evidence
External Surveillance Audits						
52	Are records of external quality surveillance audits being retained in the project files?	❑	❑	❑	❑	
53	Are corrective and preventive actions arising from quality surveillance audits being implemented as appropriate?	❑	❑	❑	❑	
Training						
93	Does the QA/QC plan specify the quality requirements for training?	❑	❑	❑	❑	
94	Is training being conducted at in accordance with the QA/QC Plan requirements?	❑	❑	❑	❑	
95	Are records of training being retained in the project files?	❑	❑	❑	❑	

Exhibit QP 14.03-2 – Regional Consultant Surveillance Audit Report and Checklist

California High-Speed Train Project		Procedure No. QP 15.01
Title: Quality System Training		Revision No.: 1
Prepared by: PMT QA/QC Manager	Approved by: PMT Program Director	Effective Date: 3/10/10

1. Purpose and Scope

This procedure describes the responsibilities and process to ensure that PMT members have access to the Quality Plan and are suitably trained on the Quality Plan requirements.

2. Responsibilities

The PMT QA/QC Manager is responsible for ensuring that this Quality Plan is distributed to all PMT members and that project-specific quality system training is provided as appropriate.

The PMT QA/QC Manager is responsible for conducting QA/QC training as requested by PMT managers (e.g., Program Director, Operations Manager, Environmental Manger, Engineering Manager, Subsystem Managers, Staging/Procurement Manager) in the project-specific QA/QC requirements. The PMT QA/QC Manager will coordinate with the PMT managers in determining the content of the training.

PMT managers are responsible for educating their staff about the project-specific QA/QC requirements.

3. Process

Project-specific QA/QC training will primarily concentrate on the design procedures to be performed for every deliverable item, including the documentation processes to be used. The topics that should be covered shall be inclusive of, but not necessarily limited to, the following categories:

- Project Team Organization
- Responsibilities for Quality Performance
- Quality Objectives
- Design Coordination
- Design Products
- Design Checking
- Design Reviews
- Design Audits
- Design Changes
- Documentation

QA/QC training will be conducted whenever any of the following events occurs:

- The training is requested by a PMT manager for some or all personnel
- Any single internal audit discovers more than five nonconformances
- An external audit identifies more than eight action requests

4. Records

The performance of training will be documented in the project file with comprehensive coverage of how the operation was managed and performed. The following material should be contained in specifically dedicated files for this training:

- Lesson Plan for each training session held
- Sign-in sheet for attendance at training sessions held

California High-Speed Train Project		Procedure No. QP 15.02
Title: **Auditor Qualification**		Revision No.: 1
Prepared by:	Approved by:	Effective Date: 3/10/10
PMT QA/QC Manager	PMT Program Director	

1. Purpose and Scope

This procedure defines the minimum requirements for the qualification of quality assurance auditors for the Project.

2. Responsibilities

The PMT QA/QC Manager is responsible for the selection, training, qualification, and assignment of project auditors. Personnel selected to perform audits shall be independent of any direct responsibility for performance of the activities that they will audit.

3. Process

To qualify as a QA auditor, an individual must meet the following requirements:

- Possess a general understanding the scope, complexity, and nature of the activities being audited
- Possess knowledge and understanding of the management and contractual requirements of the Project
- Possess knowledge of principles and techniques of auditing, including audit planning
- Demonstrate effective participation in a minimum of three audits (on this or other projects) within the past two years, including one performed in the past year. To obtain experience, an individual (auditor-in-training) shall perform or participate in three audits under the direction of a qualified auditor
- Be capable of communicating effectively, both in writing and verbally

The PMT QA/QC Manager shall assess the qualifications of potential auditors and maintain records of auditor qualifications using **Exhibit 15.02-1**.

4. Records

Records of auditor qualifications shall be retained in the project files and made available for subsequent quality audits and surveillance reviews.

California High-Speed Train Project
Record of Auditor Qualification

CANDIDATE NAME:	**DATE:**
EVALUATED BY PMT QA/QC Manager:	**DATE:**

Qualification Requirements:	Yes	No	N/A
Candidate possesses a general understanding of the scope, complexity, and nature of the activities being audited	☐	☐	☐
Candidate possesses knowledge and understanding of the management and contractual requirements of the Project	☐	☐	☐
Candidate demonstrates effective participation in a minimum of three audits (on this or other projects) within the past two years, including one performed in the past year	☐	☐	☐
Candidate is capable of communicating effectively, both in writing and verbally	☐	☐	☐

Remarks/supporting documentation:

Exhibit 15.02-1 – Record of Auditor Qualification

APPENDIX J

CEQA THRESHOLDS OF SIGNIFICANCE

Available in the California High-Speed Rail Authority website:
http://www.cahighspeedrail.ca.gov/library.aspx

Each Section Environmental Team will have responsibility for interpreting and subsequently applying in a consistent and objective basis thresholds of significance for evaluating potential environmental impacts. The CEQA Thresholds of Significance, found in Appendix G of the CEQA Guidelines and described below, should be considered a minimum set of criteria for project evaluation. It is expected that the section teams will also consider locally and/or regionally adopted criteria and procedures to assist in determining the environmental significance of a project. Once the thresholds of significance have been identified, the section teams shall obtain concurrence from resources and permitting agencies prior to conducting the resource evaluations.

Issues:

	Potentially Significant Impact	Less Than Significant with Mitigation Incorporated	Less Than Significant Impact	No Impact
I. AESTHETICS -- Would the project:				
a) Have a substantial adverse effect on a scenic vista?	❒	❒	❒	❒
b) Substantially damage scenic resources, including, but not limited to, trees, rock outcroppings, and historic buildings within a state scenic highway?	❒	❒	❒	❒
c) Substantially degrade the existing visual character or quality of the site and its surroundings?	❒	❒	❒	❒
d) Create a new source of substantial light or glare which would adversely affect day or nighttime views in the area?	❒	❒	❒	❒
II. AGRICULTURE RESOURCES: In determining whether impacts to agricultural resources are significant environmental effects, lead agencies may refer to the California Agricultural Land Evaluation and Site Assessment Model (1997) prepared by the California Dept. of Conservation as an optional model to use in assessing impacts on agriculture and farmland. Would the project:				
a) Convert Prime Farmland, Unique Farmland, or Farmland of Statewide Importance (Farmland), as shown on the maps prepared pursuant to the Farmland Mapping and Monitoring Program of the California Resources Agency, to non-agricultural use?	❒	❒	❒	❒
b) Conflict with existing zoning for agricultural use, or a Williamson Act contract?	❒	❒	❒	❒
c) Involve other changes in the existing environment which, due to their location or nature, could result in conversion of Farmland, to non-agricultural use?	❒	❒	❒	❒

	Potentially Significant Impact	Less Than Significant with Mitigation Incorporated	Less Than Significant Impact	No Impact
III. AIR QUALITY -- Where available, the significance criteria established by the applicable air quality management or air pollution control district may be relied upon to make the following determinations. Would the project:				
a) Conflict with or obstruct implementation of the applicable air quality plan?	❒	❒	❒	❒
b) Violate any air quality standard or contribute substantially to an existing or projected air quality violation?	❒	❒	❒	❒
c) Result in a cumulatively considerable net increase of any criteria pollutant for which the project region is non-attainment under an applicable federal or state ambient air quality standard (including releasing emissions which exceed quantitative thresholds for ozone precursors)?	❒	❒	❒	❒
d) Expose sensitive receptors to substantial pollutant concentrations?	❒	❒	❒	❒
e) Create objectionable odors affecting a substantial number of people?	❒	❒	❒	❒
IV. BIOLOGICAL RESOURCES -- Would the project:				
a) Have a substantial adverse effect, either directly or through habitat modifications, on any species identified as a candidate, sensitive, or special status species in local or regional plans, policies, or regulations, or by the California Department of Fish and Game or U.S. Fish and Wildlife Service?	❒	❒	❒	❒
b) Have a substantial adverse effect on any riparian habitat or other sensitive natural community identified in local or regional plans, policies, regulations or by the California Department of Fish and Game or US Fish and Wildlife Service?	❒	❒	❒	❒
c) Have a substantial adverse effect on federally protected wetlands as defined by Section 404 of the Clean Water Act (including, but not limited to, marsh, vernal pool, coastal, etc.) through direct removal,	❒	❒	❒	❒

	Potentially Significant Impact	Less Than Significant with Mitigation Incorporated	Less Than Significant Impact	No Impact
filling, hydrological interruption, or other means?				
d) Interfere substantially with the movement of any native resident or migratory fish or wildlife species or with established native resident or migratory wildlife corridors, or impede the use of native wildlife nursery sites?	❒	❒	❒	❒
e) Conflict with any local policies or ordinances protecting biological resources, such as a tree preservation policy or ordinance?	❒	❒	❒	❒
f) Conflict with the provisions of an adopted Habitat Conservation Plan, Natural Community Conservation Plan, or other approved local, regional, or state habitat conservation plan?	❒	❒	❒	❒
V. CULTURAL RESOURCES -- Would the project:				
a) Cause a substantial adverse change in the significance of a historical resource as defined in § 15064.5?	❒	❒	❒	❒
b) Cause a substantial adverse change in the significance of an archaeological resource pursuant to § 15064.5?	❒	❒	❒	❒
c) Directly or indirectly destroy a unique paleontological resource or site or unique geologic feature?	❒	❒	❒	❒
d) Disturb any human remains, including those interred outside of formal cemeteries?	❒	❒	❒	❒
VI. GEOLOGY AND SOILS -- Would the project:				
a) Expose people or structures to potential substantial adverse effects, including the risk of loss, injury, or death involving:	❒	❒	❒	❒
i) Rupture of a known earthquake fault, as delineated on the most recent Alquist-Priolo Earthquake Fault Zoning Map issued by the State Geologist for the area or based on other substantial evidence of a known fault? Refer to Division of Mines and Geology Special Publication 42.	❒	❒	❒	❒

	Potentially Significant Impact	Less Than Significant with Mitigation Incorporated	Less Than Significant Impact	No Impact
ii) Strong seismic ground shaking?	❒	❒	❒	❒
iii) Seismic-related ground failure, including liquefaction?	❒	❒	❒	❒
iv) Landslides?	❒	❒	❒	❒
b) Result in substantial soil erosion or the loss of topsoil?	❒	❒	❒	❒
c) Be located on a geologic unit or soil that is unstable, or that would become unstable as a result of the project, and potentially result in on- or off-site landslide, lateral spreading, subsidence, liquefaction or collapse?	❒	❒	❒	❒
d) Be located on expansive soil, as defined in Table 18-1-B of the Uniform Building Code (1994), creating substantial risks to life or property?	❒	❒	❒	❒
e) Have soils incapable of adequately supporting the use of septic tanks or alternative waste water disposal systems where sewers are not available for the disposal of waste water?	❒	❒	❒	❒
VII. HAZARDS AND HAZARDOUS MATERIALS -- Would the project:				
a) Create a significant hazard to the public or the environment through the routine transport, use, or disposal of hazardous materials?	❒	❒	❒	❒
b) Create a significant hazard to the public or the environment through reasonably foreseeable upset and accident conditions involving the release of hazardous materials into the environment?	❒	❒	❒	❒
c) Emit hazardous emissions or handle hazardous or acutely hazardous materials, substances, or waste within one-quarter mile of an existing or proposed school?	❒	❒	❒	❒

	Potentially Significant Impact	Less Than Significant with Mitigation Incorporated	Less Than Significant Impact	No Impact
d) Be located on a site which is included on a list of hazardous materials sites compiled pursuant to Government Code Section 65962.5 and, as a result, would it create a significant hazard to the public or the environment?	❒	❒	❒	❒
e) For a project located within an airport land use plan or, where such a plan has not been adopted, within two miles of a public airport or public use airport, would the project result in a safety hazard for people residing or working in the project area?	❒	❒	❒	❒
f) For a project within the vicinity of a private airstrip, would the project result in a safety hazard for people residing or working in the project area?	❒	❒	❒	❒
g) Impair implementation of or physically interfere with an adopted emergency response plan or emergency evacuation plan?	❒	❒	❒	❒
h) Expose people or structures to a significant risk of loss, injury or death involving wildland fires, including where wildlands are adjacent to urbanized areas or where residences are intermixed with wildlands?	❒	❒	❒	❒
VIII. HYDROLOGY AND WATER QUALITY -- Would the project:				
a) Violate any water quality standards or waste discharge requirements?	❒	❒	❒	❒
b) Substantially deplete groundwater supplies or interfere substantially with groundwater recharge such that there would be a net deficit in aquifer volume or a lowering of the local groundwater table level (e.g., the production rate of pre-existing nearby wells would drop to a level which would not support existing land uses or planned uses for which permits have been granted)?	❒	❒	❒	❒
c) Substantially alter the existing drainage pattern of the site or area, including through the alteration of the course of a stream or	❒	❒	❒	❒

	Potentially Significant Impact	Less Than Significant with Mitigation Incorporated	Less Than Significant Impact	No Impact
river, in a manner which would result in substantial erosion or siltation on- or off-site?				
d) Substantially alter the existing drainage pattern of the site or area, including through the alteration of the course of a stream or river, or substantially increase the rate or amount of surface runoff in a manner which would result in flooding on- or off-site?	❒	❒	❒	❒
e) Create or contribute runoff water which would exceed the capacity of existing or planned stormwater drainage systems or provide substantial additional sources of polluted runoff?	❒	❒	❒	❒
f) Otherwise substantially degrade water quality?	❒	❒	❒	❒
g) Place housing within a 100-year flood hazard area as mapped on a federal Flood Hazard Boundary or Flood Insurance Rate Map or other flood hazard delineation map?	❒	❒	❒	❒
h) Place within a 100-year flood hazard area structures which would impede or redirect flood flows?	❒	❒	❒	❒
i) Expose people or structures to a significant risk of loss, injury or death involving flooding, including flooding as a result of the failure of a levee or dam?	❒	❒	❒	❒
j) Inundation by seiche, tsunami, or mudflow?	❒	❒	❒	❒
IX. LAND USE AND PLANNING - Would the project:				
a) Physically divide an established community?	❒	❒	❒	❒
b) Conflict with any applicable land use plan, policy, or regulation of an agency with jurisdiction over the project (including, but not limited to the general plan, specific plan, local coastal program, or zoning ordinance) adopted for the purpose of avoiding or mitigating an environmental effect?	❒	❒	❒	❒
c) Conflict with any applicable habitat conservation plan or natural community conservation plan?	❒	❒	❒	❒

	Potentially Significant Impact	Less Than Significant with Mitigation Incorporated	Less Than Significant Impact	No Impact
X. MINERAL RESOURCES -- Would the project:				
a) Result in the loss of availability of a known mineral resource that would be of value to the region and the residents of the state?	❒	❒	❒	❒
b) Result in the loss of availability of a locally-important mineral resource recovery site delineated on a local general plan, specific plan or other land use plan?	❒	❒	❒	❒
XI. NOISE -- Would the project result in:				
a) Exposure of persons to or generation of noise levels in excess of standards established in the local general plan or noise ordinance, or applicable standards of other agencies?	❒	❒	❒	❒
b) Exposure of persons to or generation of excessive groundborne vibration or groundborne noise levels?	❒	❒	❒	❒
c) A substantial permanent increase in ambient noise levels in the project vicinity above levels existing without the project?	❒	❒	❒	❒
d) A substantial temporary or periodic increase in ambient noise levels in the project vicinity above levels existing without the project?	❒	❒	❒	❒
e) For a project located within an airport land use plan or, where such a plan has not been adopted, within two miles of a public airport or public use airport, would the project expose people residing or working in the project area to excessive noise levels?	❒	❒	❒	❒
f) For a project within the vicinity of a private airstrip, would the project expose people residing or working in the project area to excessive noise levels?	❒	❒	❒	❒

	Potentially Significant Impact	Less Than Significant with Mitigation Incorporated	Less Than Significant Impact	No Impact
XII. POPULATION AND HOUSING -- Would the project:				
a) Induce substantial population growth in an area, either directly (for example, by proposing new homes and businesses) or indirectly (for example, through extension of roads or other infrastructure)?	❒	❒	❒	❒
b) Displace substantial numbers of existing housing, necessitating the construction of replacement housing elsewhere?	❒	❒	❒	❒
c) Displace substantial numbers of people, necessitating the construction of replacement housing elsewhere?	❒	❒	❒	❒
XIII. PUBLIC SERVICES				
a) Would the project result in substantial adverse physical impacts associated with the provision of new or physically altered governmental facilities, need for new or physically altered governmental facilities, the construction of which could cause significant environmental impacts, in order to maintain acceptable service ratios, response times or other performance objectives for any of the public services:				
Fire protection?	❒	❒	❒	❒
Police protection?	❒	❒	❒	❒
Schools?	❒	❒	❒	❒
Parks?	❒	❒	❒	❒
Other public facilities?	❒	❒	❒	❒
XIV. RECREATION				
a) Would the project increase the use of existing neighborhood and regional parks or other recreational facilities such that substantial physical deterioration of the facility would occur or be accelerated?	❒	❒	❒	❒

	Potentially Significant Impact	Less Than Significant with Mitigation Incorporated	Less Than Significant Impact	No Impact
b) Does the project include recreational facilities or require the construction or expansion of recreational facilities which might have an adverse physical effect on the environment?	❒	❒	❒	❒
XV. TRANSPORTATION/TRAFFIC -- Would the project:				
a) Cause an increase in traffic which is substantial in relation to the existing traffic load and capacity of the street system (i.e., result in a substantial increase in either the number of vehicle trips, the volume to capacity ratio on roads, or congestion at intersections)?	❒	❒	❒	❒
b) Exceed, either individually or cumulatively, a level of service standard established by the county congestion management agency for designated roads or highways?	❒	❒	❒	❒
c) Result in a change in air traffic patterns, including either an increase in traffic levels or a change in location that results in substantial safety risks?	❒	❒	❒	❒
d) Substantially increase hazards due to a design feature (e.g., sharp curves or dangerous intersections) or incompatible uses (e.g., farm equipment)?	❒	❒	❒	❒
e) Result in inadequate emergency access?	❒	❒	❒	❒
f) Result in inadequate parking capacity?	❒	❒	❒	❒
g) Conflict with adopted policies, plans, or programs supporting alternative transportation (e.g., bus turnouts, bicycle racks)?	❒	❒	❒	❒
XVI. UTILITIES AND SERVICE SYSTEMS -- Would the project:				
a) Exceed wastewater treatment requirements of the applicable Regional Water Quality Control Board?	❒	❒	❒	❒

	Potentially Significant Impact	Less Than Significant with Mitigation Incorporated	Less Than Significant Impact	No Impact
b) Require or result in the construction of new water or wastewater treatment facilities or expansion of existing facilities, the construction of which could cause significant environmental effects?	❒	❒	❒	❒
c) Require or result in the construction of new storm water drainage facilities or expansion of existing facilities, the construction of which could cause significant environmental effects?	❒	❒	❒	❒
d) Have sufficient water supplies available to serve the project from existing entitlements and resources, or are new or expanded entitlements needed?	❒	❒	❒	❒
e) Result in a determination by the wastewater treatment provider which serves or may serve the project that it has adequate capacity to serve the project's projected demand in addition to the provider's existing commitments?	❒	❒	❒	❒
f) Be served by a landfill with sufficient permitted capacity to accommodate the project's solid waste disposal needs?	❒	❒	❒	❒
g) Comply with federal, state, and local statutes and regulations related to solid waste?	❒	❒	❒	❒
XVII. MANDATORY FINDINGS OF SIGNIFICANCE				
a) Does the project have the potential to degrade the quality of the environment, substantially reduce the habitat of a fish or wildlife species, cause a fish or wildlife population to drop below self-sustaining levels, threaten to eliminate a plant or animal community, reduce the number or restrict the range of a rare or endangered plant or animal or eliminate important examples of the major periods of California history or prehistory?	❒	❒	❒	❒
b) Does the project have impacts that are individually limited, but cumulatively considerable? ("Cumulatively considerable" means that the incremental	❒	❒	❒	❒

	Potentially Significant Impact	Less Than Significant with Mitigation Incorporated	Less Than Significant Impact	No Impact
effects of a project are considerable when viewed in connection with the effects of past projects, the effects of other current projects, and the effects of probable future projects)?				
c) Does the project have environmental effects which will cause substantial adverse effects on human beings, either directly or indirectly?	❒	❒	❒	❒

Note: Authority cited: Sections 21083 and 21087, Public Resources Code. Reference: Sections 21080(c), 21080.1, 21080.3, 21082.1, 21083, 21083.3, 21093, 21094, 21151, Public Resources Code; Sundstrom v. County of Mendocino, 202 Cal.App.3d 296 (1988); Leonoff v. Monterey Board of Supervisors, 222 Cal.App.3d 1337 (1990).