California High-Speed Train Project

Request for Proposal for Design-Build Services

RFP No.: HSR 11-16

Standard Drawings

Revision No.	Date	Description
0	01 Mar 12	Initial Release, R0

DRAINAGE

DRAWING TYPE	DRAWING NO.	DRAWING TITLE
SD	SD-CD-001	TRACK DRAIN/UNDERDRAIN, CLEANOUT AND RISER DETAILS
SD	SD-CD-002	DITCH DETAILS
SD	SD-CD-003	STORM DRAIN HOLES
SD	SD-CD-004	RETAINING WALL DRAINAGE DETAILS

STANDARD DRAWINGS

REV	DATE	BY	CHK	APP	DESCRIPTION

DESIGNED BY R. MINCIO
DRAWN BY V. HUANTE
CHECKED BY H. NGUYEN
IN CHARGE J. CHIRCO
DATE 03/01/2012

PARSONS BRINCKERHOFF

CALIFORNIA HIGH-SPEED RAIL AUTHORITY

CALIFORNIA HIGH-SPEED TRAIN PROJECT
SIERRA SUBDIVISION

STANDARD DRAWINGS
CONTRACT PACKAGE 1
SHEET INDEX

CONTRACT NO.
DRAWING NO. INDEX-2 CP1
SCALE NO SCALE
SHEET NO.

mincio 2/29/2012 7:34:47 PM CAHSRP.TBL CHSR_half_black.plt T:\13259B Calif High Speed Rail\CADD\Standard Drawings\General\INDEX-2_CP1.dgn

NOTES:

1. RISER MAY BE ANGLED AT 90 DEGREES DUE TO SPACE CONSIDERATIONS.

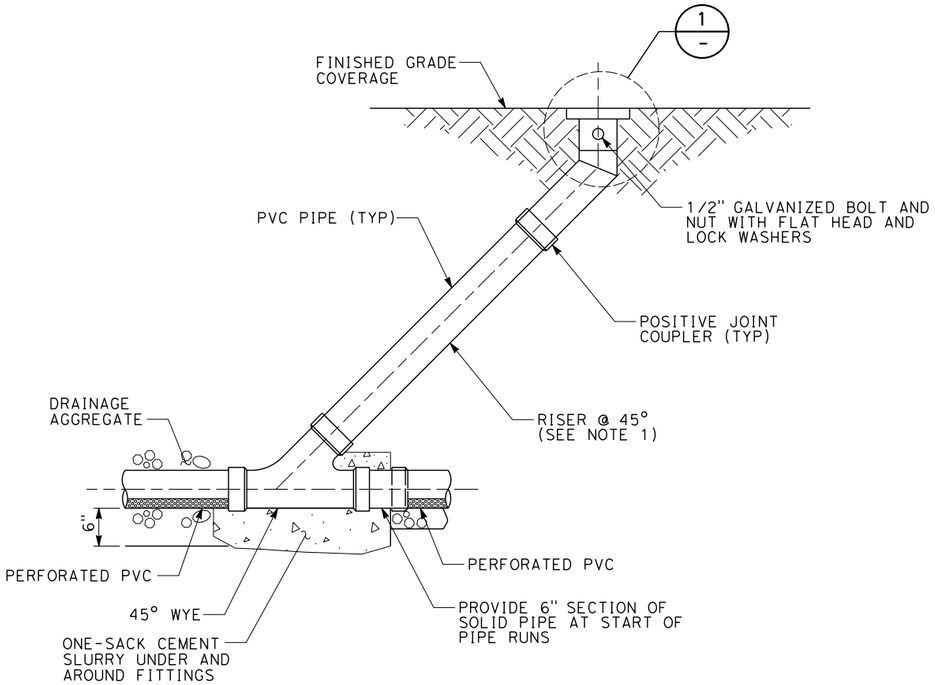

INTERMEDIATE RISER/CLEANOUT

SCALE: 1"=1'-0"

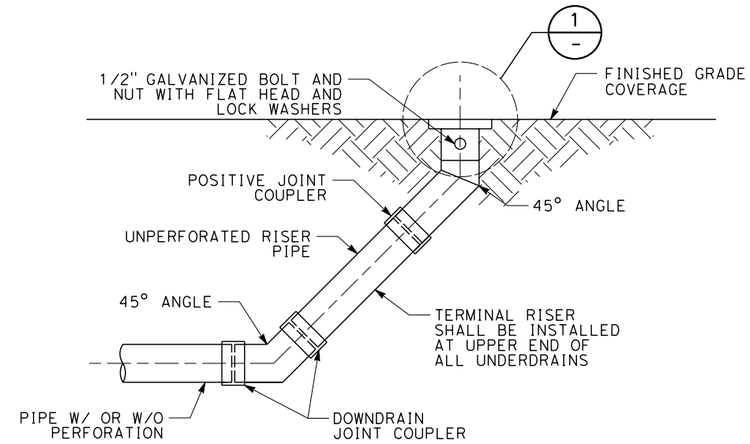

TERMINAL RISER DETAIL

SCALE: 1"=1'-0"

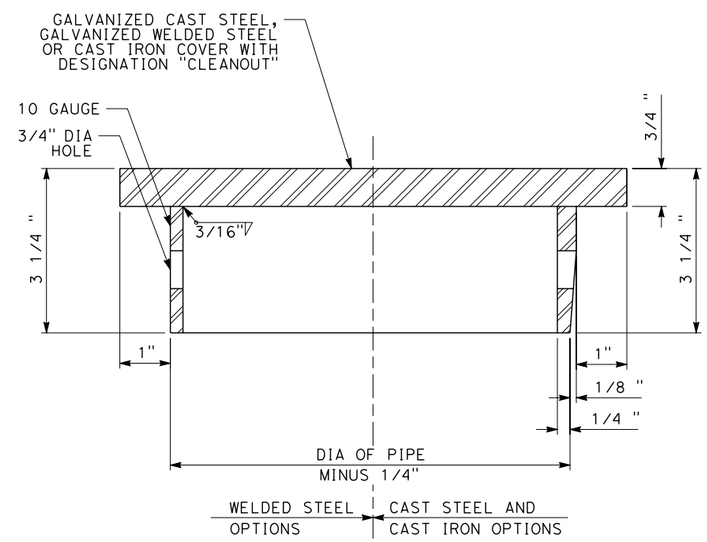

DETAIL 1/-

SCALE: 8"=1'-0"

03/01/2012 RFP HSR 11-16

STANDARD DRAWINGS

REV	DATE	BY	CHK	APP	DESCRIPTION

DESIGNED BY K. SISTLA
DRAWN BY V. HUANTE
CHECKED BY A. ABTAHI
IN CHARGE J. CHIRCO
DATE 03/01/2012

PARSONS BRINCKERHOFF

CALIFORNIA HIGH-SPEED RAIL AUTHORITY

CALIFORNIA HIGH-SPEED TRAIN PROJECT DRAINAGE STANDARD

TRACK DRAIN/UNDERDRAIN CLEANOUT AND RISER DETAILS

CONTRACT NO.
DRAWING NO. SD-CD-001
SCALE AS SHOWN
SHEET NO.

huante 2/24/2012 2:56:01 PM CAHSRP.tbl CHSR_half_black.plt T:\13259B Calif High Speed Rail\CADD\Standard Drawings\Drainage\SD-CD-001.dgn

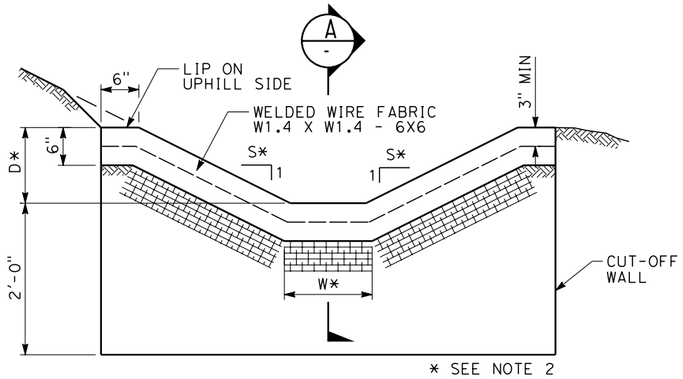

TYPE A (TRAPEZOID) DITCH

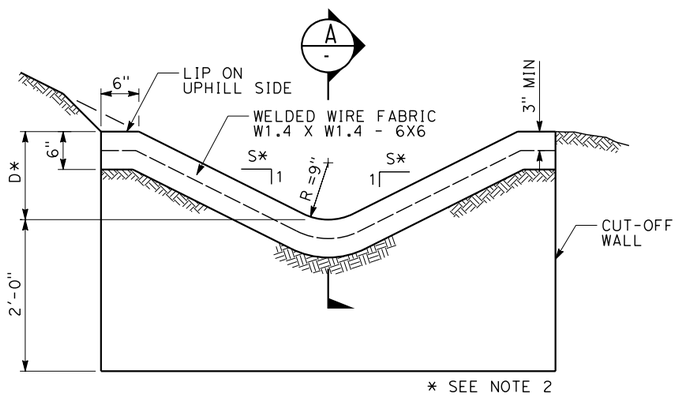

TYPE B ("V") DITCH

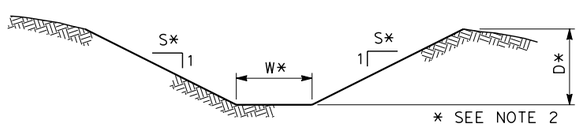

TYPE C (TRAPEZOID) DITCH

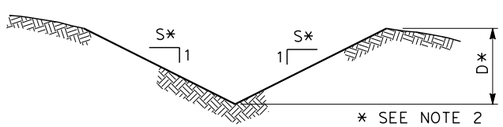

TYPE D ("V") DITCH

DITCH DETAILS

NO SCALE

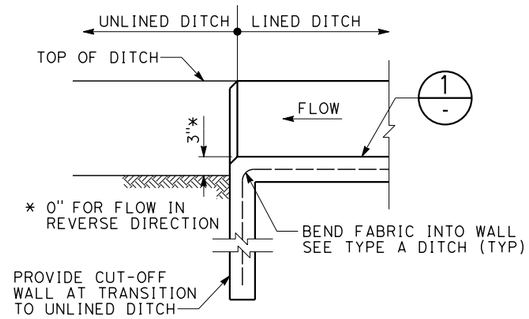

SECTION A -

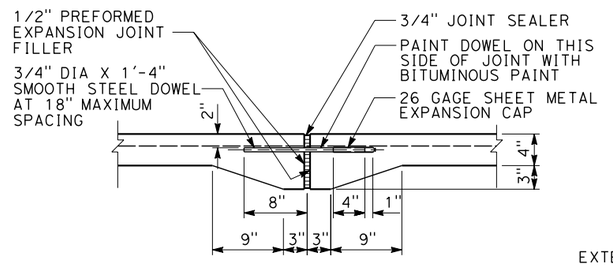

EXPANSION JOINT

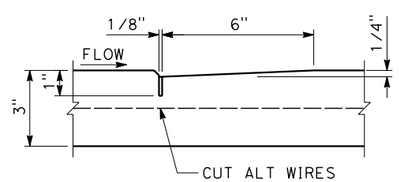

CONTRACTION JOINT

JOINT DETAILS 1 -

NO SCALE
(SEE NOTE 3)

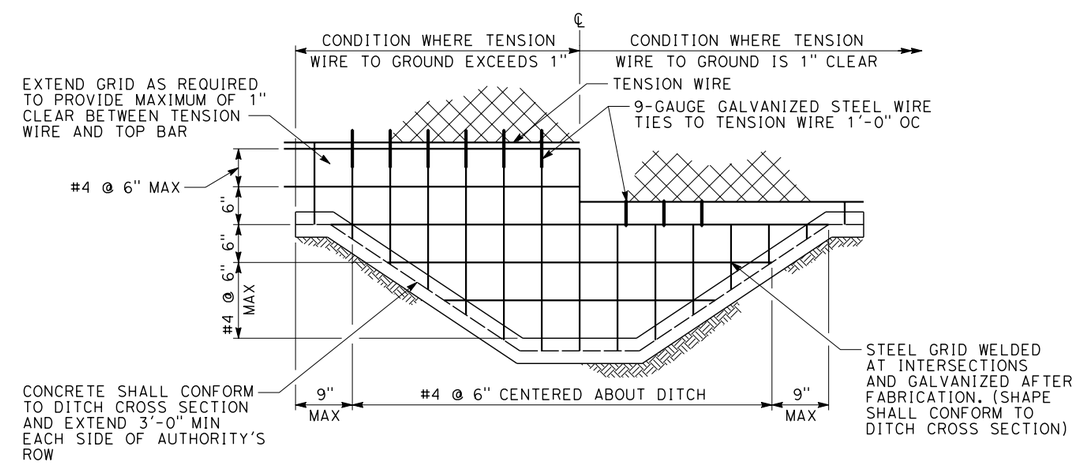

OPEN CHANNEL CLOSURE DETAIL

NO SCALE
(SEE NOTE 4)

NOTES:

1. DITCH LINING SHALL BE CONCRETE OR SHOTCRETE.
2. DITCH SHALL CONFORM TO THE FOLLOWING MINIMUM DIMENSIONS:

   D = DEPTH OF DITCH, 1 FOOT MINIMUM
   S = SLOPE OF DITCH, SIDES, 2:1 MAX FOR CONCRETE LINED CHANNEL, 3:1 MAX FOR GRASS LINED CHANNEL
   W = WIDTH OF BOTTOM OF DITCH, 4 FEET MINIMUM

3. TYPE A AND B DITCHES SHALL HAVE A CONTRACTION JOINT EVERY 10 FEET, AND AN EXPANSION JOINT EVERY 100 FEET.
4. OPEN CHANNEL CLOSURE SHALL BE REQUIRED AT EACH LOCATION WHERE AN OPEN CHANNEL PASSES UNDER AUTHORITY'S RIGHT-OF-WAY.

03/01/2012 RFP HSR 11-16

STANDARD DRAWINGS

REV	DATE	BY	CHK	APP	DESCRIPTION

DESIGNED BY K. SISTLA
DRAWN BY V. HUANTE
CHECKED BY A. ABTAHI
IN CHARGE J. CHIRCO
DATE 03/01/2012

PARSONS BRINCKERHOFF

CALIFORNIA HIGH-SPEED RAIL AUTHORITY

CALIFORNIA HIGH-SPEED TRAIN PROJECT
DRAINAGE STANDARD

DITCH DETAILS

CONTRACT NO.
DRAWING NO. SD-CD-002
SCALE NO SCALE
SHEET NO.

huante 2/24/2012 2:56:04 PM CAHSRP.tbl CHSR_half_black.plt T:\13259B Calif High Speed Rail\CADD\Standard Drawings\Drainage\SD-CD-002.dgn

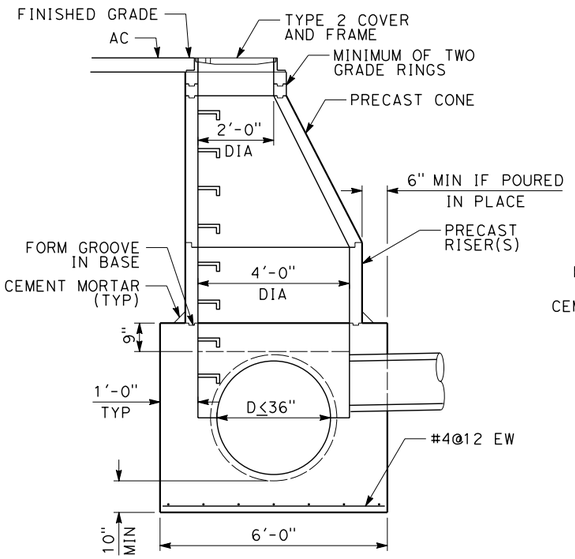

SECTION A
NO SCALE

NOTE:
FOR STEP DETAILS, SEE NOTES

MANHOLE FOR
PIPE DIAMETER 36" OR LESS

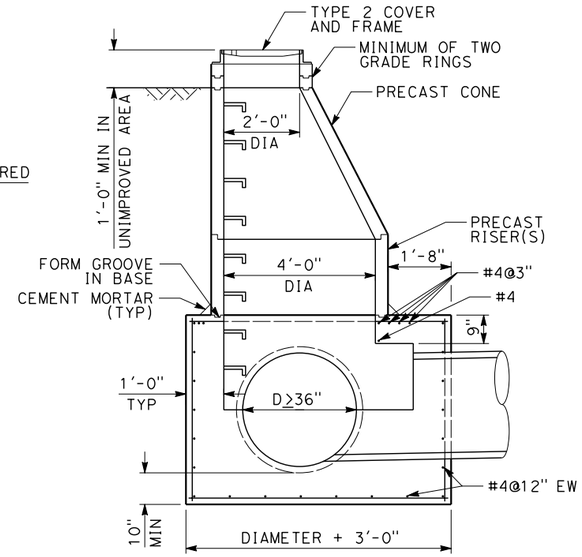

SECTION B
NO SCALE

MANHOLE FOR
PIPE DIAMETER MORE THAN 36"

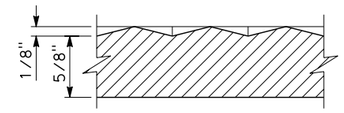

SECTION E
NO SCALE

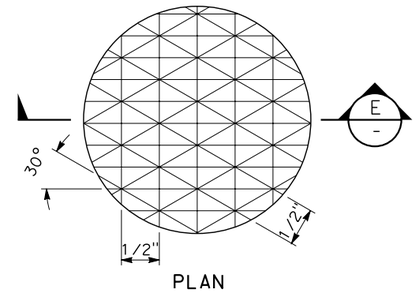

PLAN

DETAIL 6
NO SCALE

NOTES:

1. GROUT ALL JOINTS.
2. ALL PORTLAND CEMENT CONCRETE SHALL BE CLASS 4000.
3. PLACE STEPS ON DOWNSTREAM SIDE OF MANHOLE IF POSSIBLE.
4. REFER TO CALTRANS STANDARD PLAN FOR STEP DETAILS (D74C).

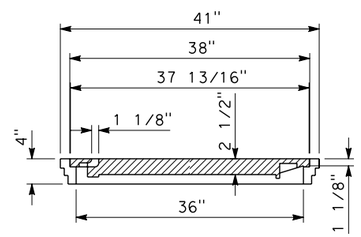

SECTION C
NO SCALE

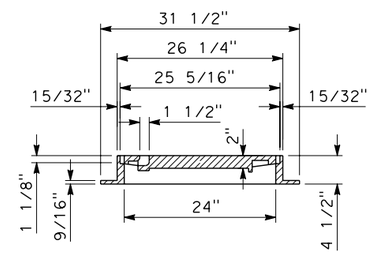

SECTION D
NO SCALE

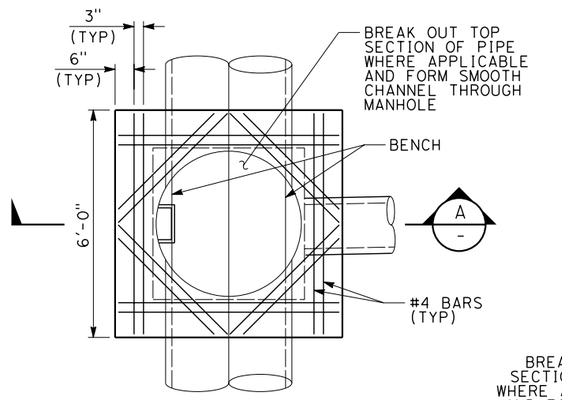

PLAN

DETAIL 1
NO SCALE

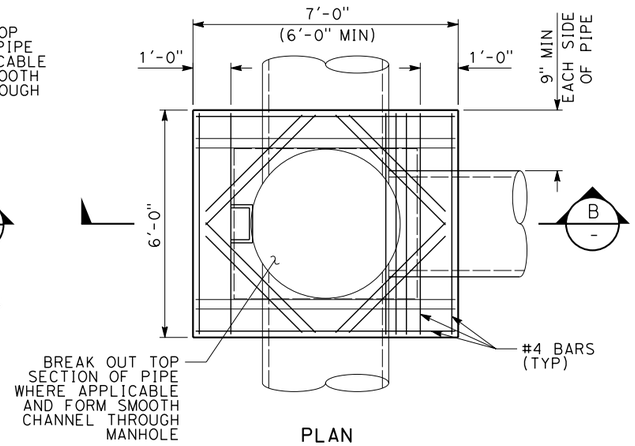

PLAN

DETAIL 2
NO SCALE

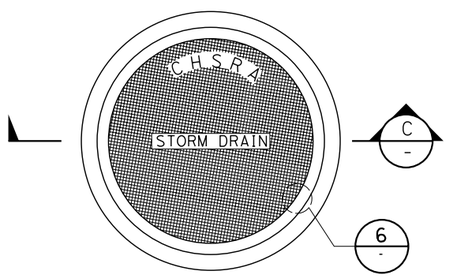

PLAN

TYPE 1 COVER AND FRAME
(WEIGHT=700#)

DETAIL 3
NO SCALE

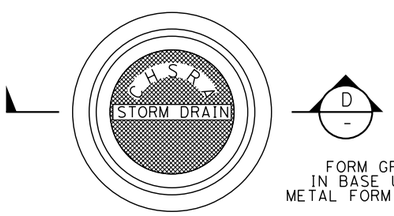

PLAN

TYPE 2 COVER AND FRAME
(WEIGHT=320#)

DETAIL 4
NO SCALE

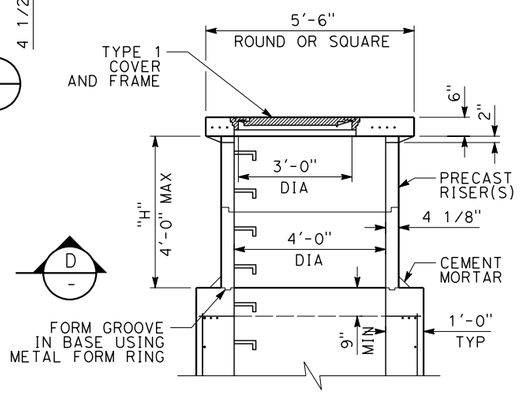

ALTERNATE CHIMNEY
AND GRADE SLAB

(REQUIRED WHERE "H" IS LESS THAN 4'-0")

DETAIL 5
NO SCALE

STANDARD DRAWINGS

03/01/2012 RFP HSR 11-16

REV	DATE	BY	CHK	APP	DESCRIPTION

DESIGNED BY K. SISTLA
DRAWN BY T. DOUNG
CHECKED BY A. ABTAHI
IN CHARGE J. CHIRCO
DATE 03/01/2012

PARSONS BRINCKERHOFF

CALIFORNIA HIGH-SPEED RAIL AUTHORITY

CALIFORNIA HIGH-SPEED TRAIN PROJECT DRAINAGE STANDARD

STORM DRAIN MANHOLES

CONTRACT NO.
DRAWING NO. SD-CD-003
SCALE NO SCALE
SHEET NO.

T:\13259B Calif High Speed Rail\CADD\Standard Drawings\Drainage\SD-CD-003.dgn
2/24/2012 2:56:07 PM CAHSRP.tbl CHSR_half_black.plt
huante

NOTES:

1. RETAINING WALL STRUCTURE IS SCHEMATIC AND DOES NOT REPRESENT DESIGN.

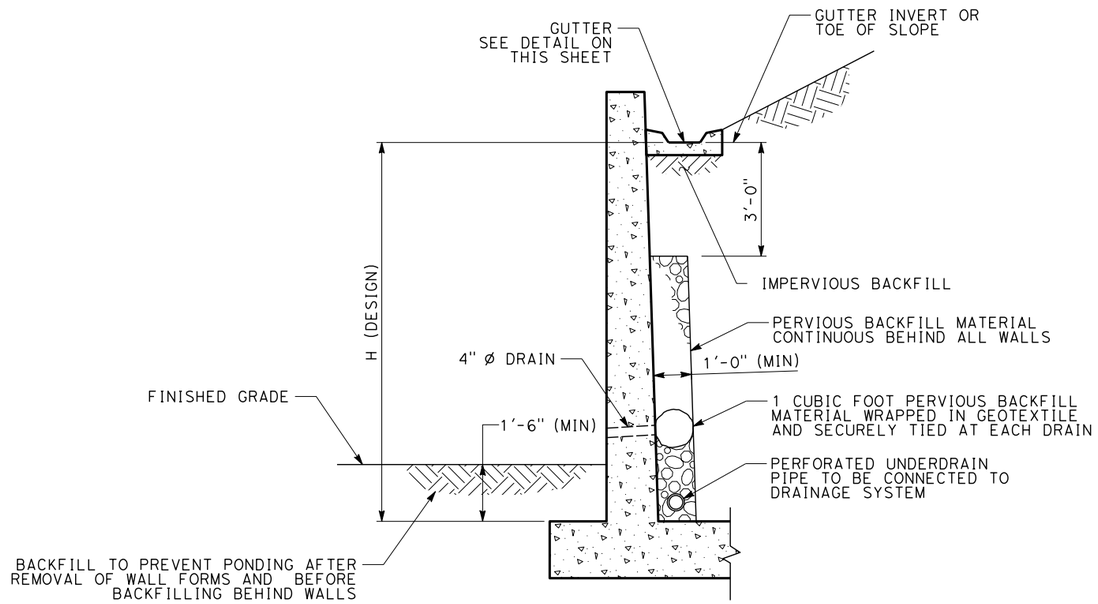

RETAINING WALL DRAINAGE

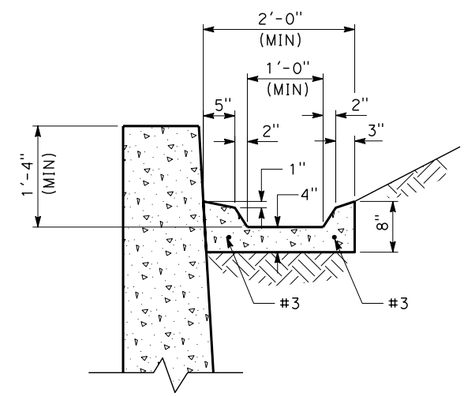

TYPICAL GUTTER DETAIL

STANDARD DRAWINGS

REV	DATE	BY	CHK	APP	DESCRIPTION

DESIGNED BY K. SISTLA
DRAWN BY V. HUANTE
CHECKED BY A. ABTAHI
IN CHARGE J. CHIRCO
DATE 03/01/2012

PARSONS BRINCKERHOFF

CALIFORNIA HIGH-SPEED RAIL AUTHORITY

CALIFORNIA HIGH-SPEED TRAIN PROJECT
DRAINAGE STANDARD

RETAINING WALL DRAINAGE DETAILS

CONTRACT NO.
DRAWING NO. SD-CD-004
SCALE NO SCALE
SHEET NO.

huante 2/24/2012 2:56:11 PM CAHSRP.tbl CHSR_half_black.plt T:\13259B Calif High Speed Rail\CADD\Standard Drawings\Drainage\SD-CD-004.dgn

03/01/2012 RFP HSR 11-16