California High-Speed Train Project

Request for Proposal for Design-Build Services

RFP No.: HSR 11-16

Book 4, Part A, Section 3
Contract Package 1B
North of Stanislaus St to South of Santa Clara St

11/13/2012 ADDENDUM 6 - RFP HSR 11-16

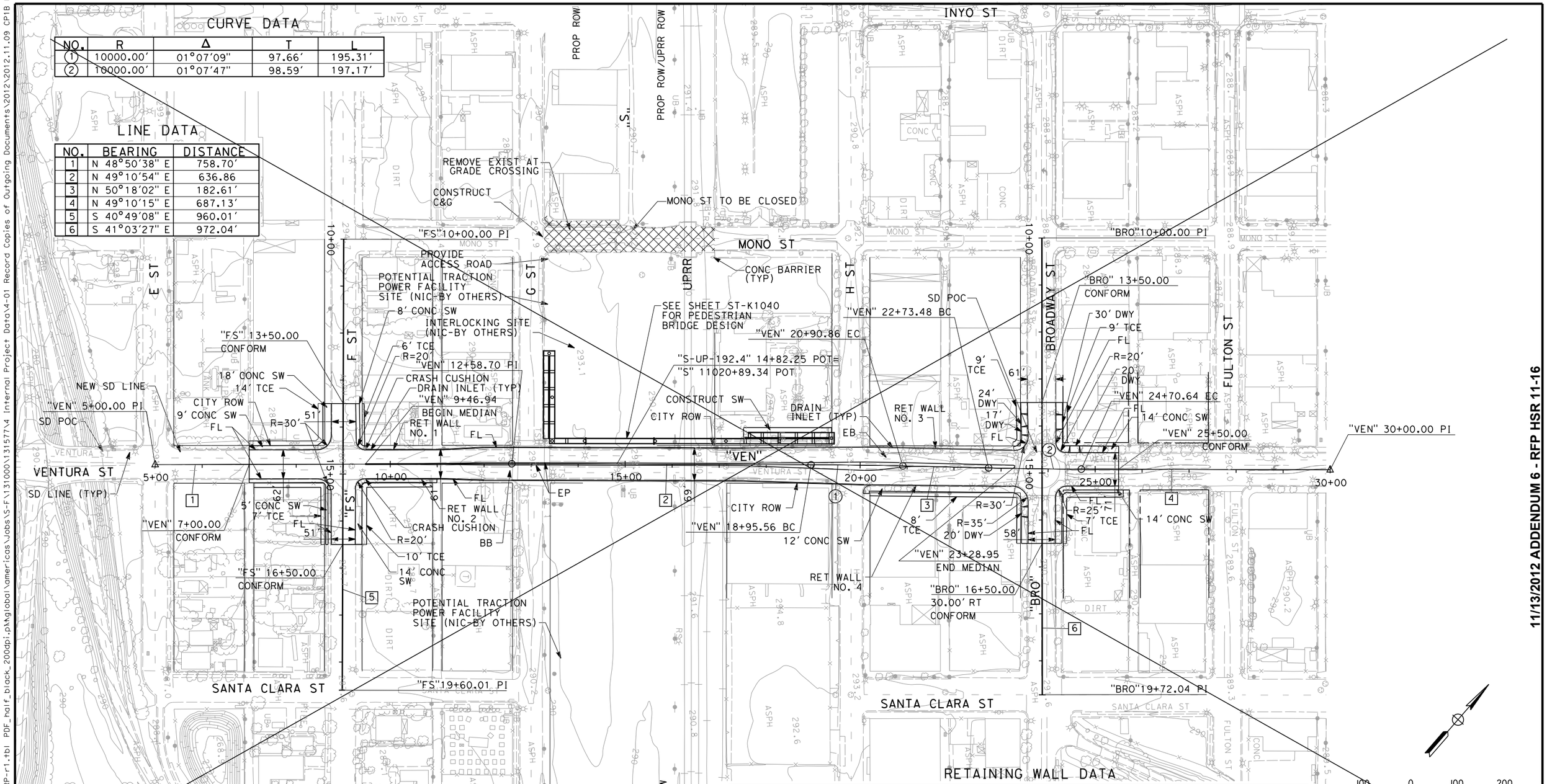

CURVE DATA

NO.	R	Δ	T	L
1	10000.00'	01°07'09"	97.66'	195.31'
2	10000.00'	01°07'47"	98.59'	197.17'

LINE DATA

NO.	BEARING	DISTANCE
1	N 48°50'38" E	758.70'
2	N 49°10'54" E	636.86
3	N 50°18'02" E	182.61'
4	N 49°10'15" E	687.13'
5	S 40°49'08" E	960.01'
6	S 41°03'27" E	972.04'

RETAINING WALL DATA

NO.	LOCATIONS		LENGTH	AVG HEIGHT
	BEGIN	END		
1	30.00' LT "VEN" 9+45.96	34.50' LT "VEN" 12+55.00	309'	10'
2	31.00' RT "VEN" 9+45.96	34.50' RT "VEN" 12+55.00	309'	10'
3	38.00' LT "VEN" 20+55.00	38.00' LT "VEN" 23+23.73	269'	10'
4	41.00' RT "VEN" 20+55.00	37.50' RT "VEN" 23+23.73	269'	10'

DELETED SHEET

ADDENDUM 6 - RFP HSR 11-16

11/13/2012 ADDENDUM 6 - RFP HSR 11-16

REV	DATE	BY	CHK	APP	DESCRIPTION
A	11/12/12	PAT	ES	RC	SHEET DELETED FROM RECORD SET

DESIGNED BY J. NETTLETON
DRAWN BY V. ORTEGA
CHECKED BY B. RAWSON
IN CHARGE Q. EARLE
DATE 11/12/12

PROPOSED PRELIMINARY DESIGN

NOT FOR CONSTRUCTION

CALIFORNIA HIGH-SPEED RAIL AUTHORITY

CALIFORNIA HIGH-SPEED TRAIN PROJECT
SIERRA SUBDIVISION
PACKAGE 1B
ROADWAY
GRADE SEPARATION LAYOUT
VENTURA ST

CONTRACT NO.
DRAWING NO. CV-T1021
SCALE AS SHOWN
SHEET NO.

Paul.Tonkin 11/13/2012 8:47:54 AM CAHSRP-r1.tbl PDF_half_black_200dpi.pktglobal\americas\Jobs\S-F\131000\131577\4 Internal Project Data\4-01 Record Copies of Outgoing Documents\2012\2012.11.09 CP1B Deleted

NOTES:

1. FOR BRIDGE INFORMATION, SEE STRUCTURAL PLANS.

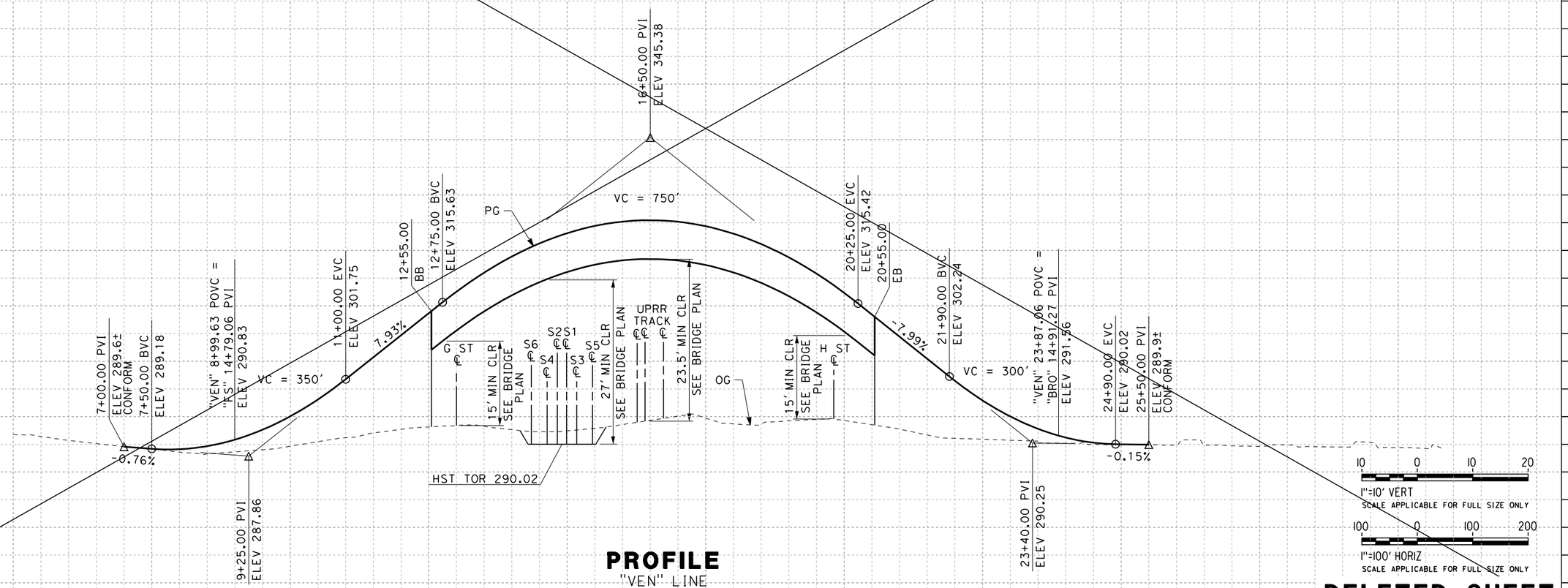

PROFILE

"VEN" LINE

DELETED SHEET

ADDENDUM 6 - RFP HSR 11-16

11/13/2012 ADDENDUM 6 - RFP HSR 11-16

REV	DATE	BY	CHK	APP	DESCRIPTION
A	11/12/12	PAT	ES	RC	SHEET DELETED FROM RECORD SET

DESIGNED BY J. NETTLETON
DRAWN BY V. ORTEGA
CHECKED BY B. RAWSON
IN CHARGE Q. EARLE
DATE 11/12/12

PROPOSED PRELIMINARY DESIGN

NOT FOR CONSTRUCTION

CALIFORNIA HIGH-SPEED RAIL AUTHORITY

CALIFORNIA HIGH-SPEED TRAIN PROJECT
SIERRA SUBDIVISION
PACKAGE 1B
ROADWAY
GRADE SEPARATION PROFILE
VENTURA ST

CONTRACT NO.
DRAWING NO. CV-T1022
SCALE AS SHOWN
SHEET NO.

Paul.Tonkin 11/12/2012 4:53:52 PM CAHSRP-r1.tbl PDF_half_black_200dpi.pktglobal\americas\Jobs\S-F\131000\131577\4 Internal Project Data\4-01 Record Copies of Outgoing Documents\2012\2012.11.09 CP1B Dele

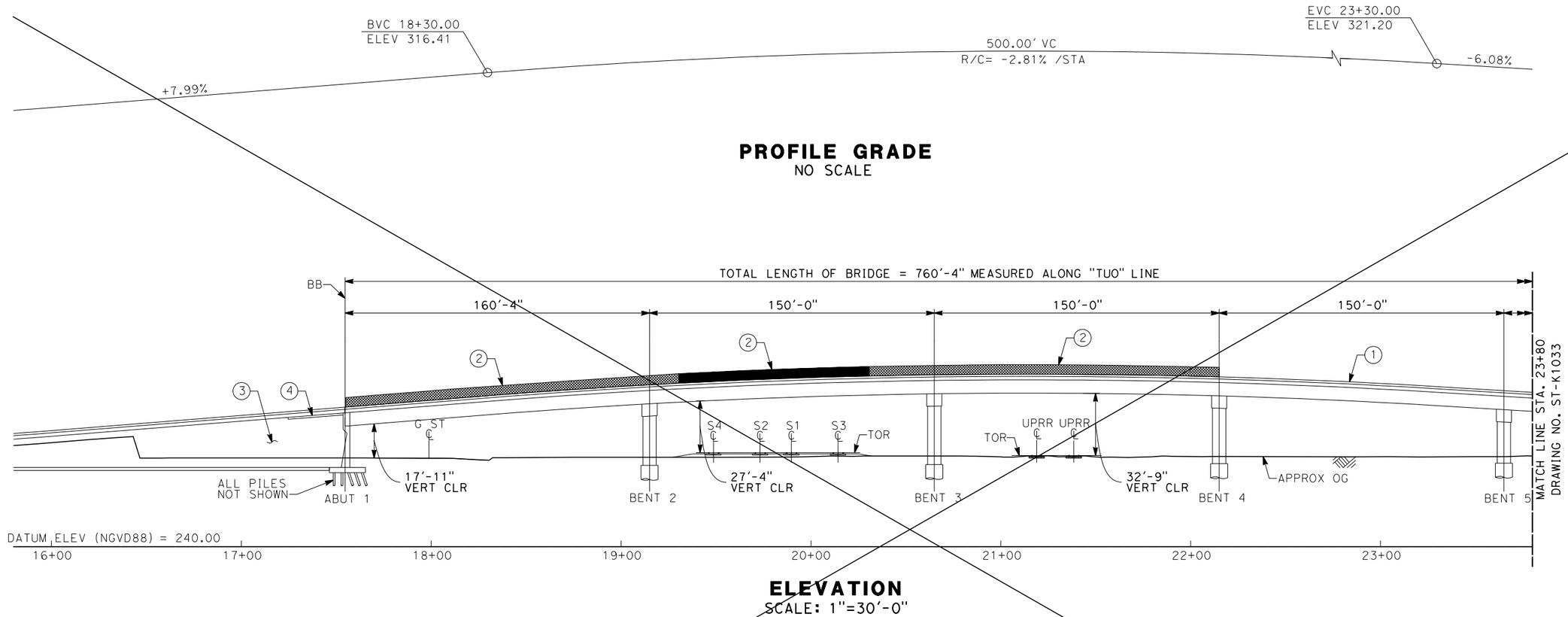

PROFILE GRADE
NO SCALE

ELEVATION
SCALE: 1"=30'-0"

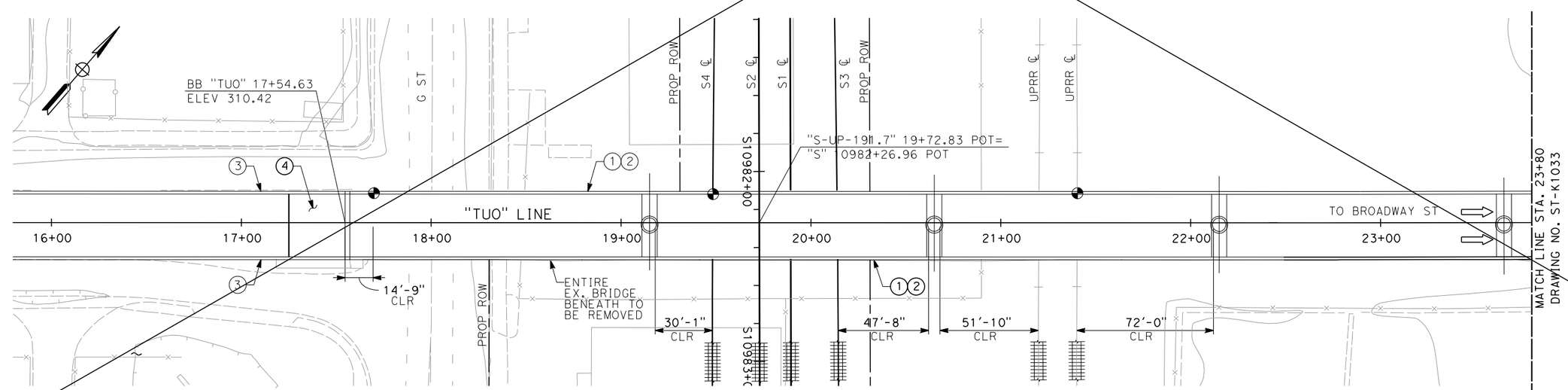

PLAN
SCALE: 1"=30'-0"

NOTES:

1. CONCRETE BARRIER (TYPE 736 MODIFIED)
2. AR FENCE
3. MSE RETAINING WALL
4. STRUCTURE APPROACH SLAB
5. FOR UTILITY INFORMATION, SEE UTILITY BASE MAP PLANS.
6. FOR INTRUSION DETECTION/PROTECTION, SEE ALIGNMENT PLANS.

LEGEND:

- INDICATES DIRECTION OF TRAFFIC
- INDICATES POINT OF MINIMUM VERTICAL CLEARANCE
- INDICATES RAILROAD AND HIGH-SPEED TRAIN TRACK

DELETED SHEET

ADDENDUM 6 - RFP HSR 11-16

REV	DATE	BY	CHK	APP	DESCRIPTION
A	11/12/12	PAT	ES	RC	SHEET DELETED FROM RECORD SET

DESIGNED BY L. SMITH
DRAWN BY T. PRETZER
CHECKED BY E. MORAN
IN CHARGE Y. BERI
DATE 11/12/12

PROPOSED PRELIMINARY DESIGN

NOT FOR CONSTRUCTION

CALIFORNIA HIGH-SPEED RAIL AUTHORITY

CALIFORNIA HIGH-SPEED TRAIN PROJECT
SIERRA SUBDIVISION
PACKAGE 1B
ROADWAY
DRAFT GENERAL PLAN
TUOLUMNE ST

CONTRACT NO.
DRAWING NO. ST-K1032
SCALE AS SHOWN
SHEET NO.

Paul.Tonkin 11/12/2012 5:00:53 PM CAHSRP-r1.tbl PDF_half_black_200dpi.pltglobalamericas\Jobs\S-F\131000\131577\4 Internal Project Data\4-01 Record Copies of Outgoing Documents\2012\2012.11.09 CP1B Dele

11/13/2012 ADDENDUM 6 - RFP HSR 11-16

PROFILE GRADE
NO SCALE

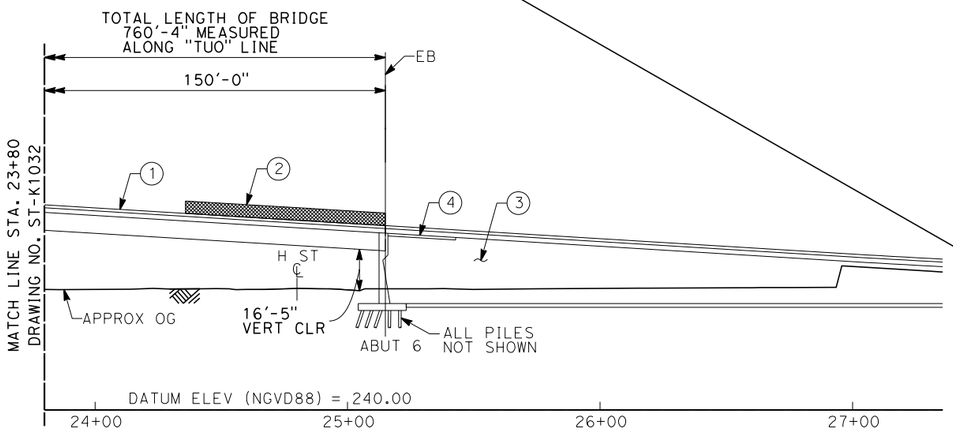

ELEVATION
SCALE: 1"=30'-0"

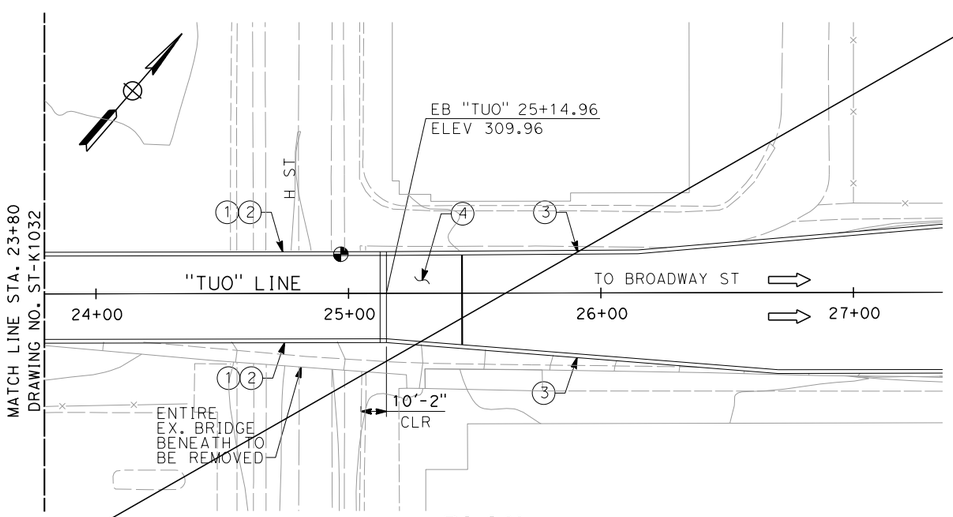

PLAN
SCALE: 1"=30'-0"

NOTES:

1. CONCRETE BARRIER (TYPE 736 MODIFIED)
2. AR FENCE
3. MSE RETAINING WALL
4. STRUCTURE APPROACH SLAB
5. FUTURE UTILITY OPENING
6. FOR UTILITY INFORMATION, SEE UTILITY BASE MAP PLANS
7. FOR INTRUSION DETECTION/PROTECTION, SEE ALIGNMENT PLANS.

LEGEND:

- INDICATES DIRECTION OF TRAFFIC
- INDICATES POINT OF MINIMUM VERTICAL CLEARANCE
- INDICATES RAILROAD AND HIGH-SPEED TRAIN TRACK

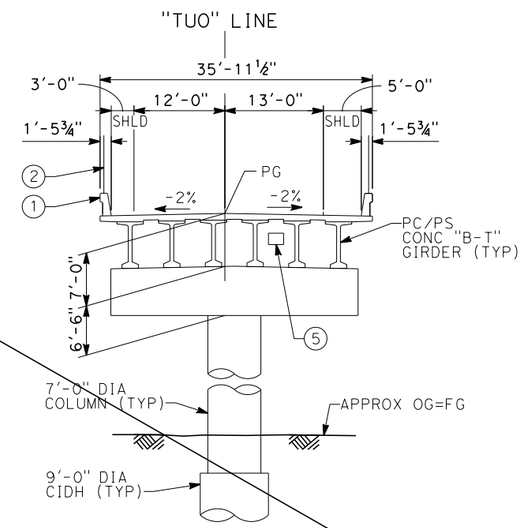

TYPICAL SECTION
SCALE: 1"=10'-0"

DELETED SHEET
ADDENDUM 6 - RFP HSR 11-16

REV	DATE	BY	CHK	APP	DESCRIPTION
A	11/12/12	PAT	ES	RC	SHEET DELETED FROM RECORD SET

DESIGNED BY L. SMITH
DRAWN BY T. PRETZER
CHECKED BY E. MORAN
IN CHARGE Y. BERI
DATE 11/12/12

PROPOSED PRELIMINARY DESIGN

NOT FOR CONSTRUCTION

CALIFORNIA HIGH-SPEED RAIL AUTHORITY

CALIFORNIA HIGH-SPEED TRAIN PROJECT
SIERRA SUBDIVISION
PACKAGE 1B
ROADWAY
DRAFT GENERAL PLAN
TUOLUMNE ST

CONTRACT NO.
DRAWING NO. ST-K1033
SCALE AS SHOWN
SHEET NO.

Paul.Tonkin 11/12/2012 5:03:31 PM CAHSRP-r1.tbl PDF_half_black_200dpi.pltglobal\americas\Jobs\S-F\131000\131577\4 Internal Project Data\4-01 Record Copies of Outgoing Documents\2012\2012.11.09 CP1B Dele

11/13/2012 ADDENDUM 6 - RFP HSR 11-16

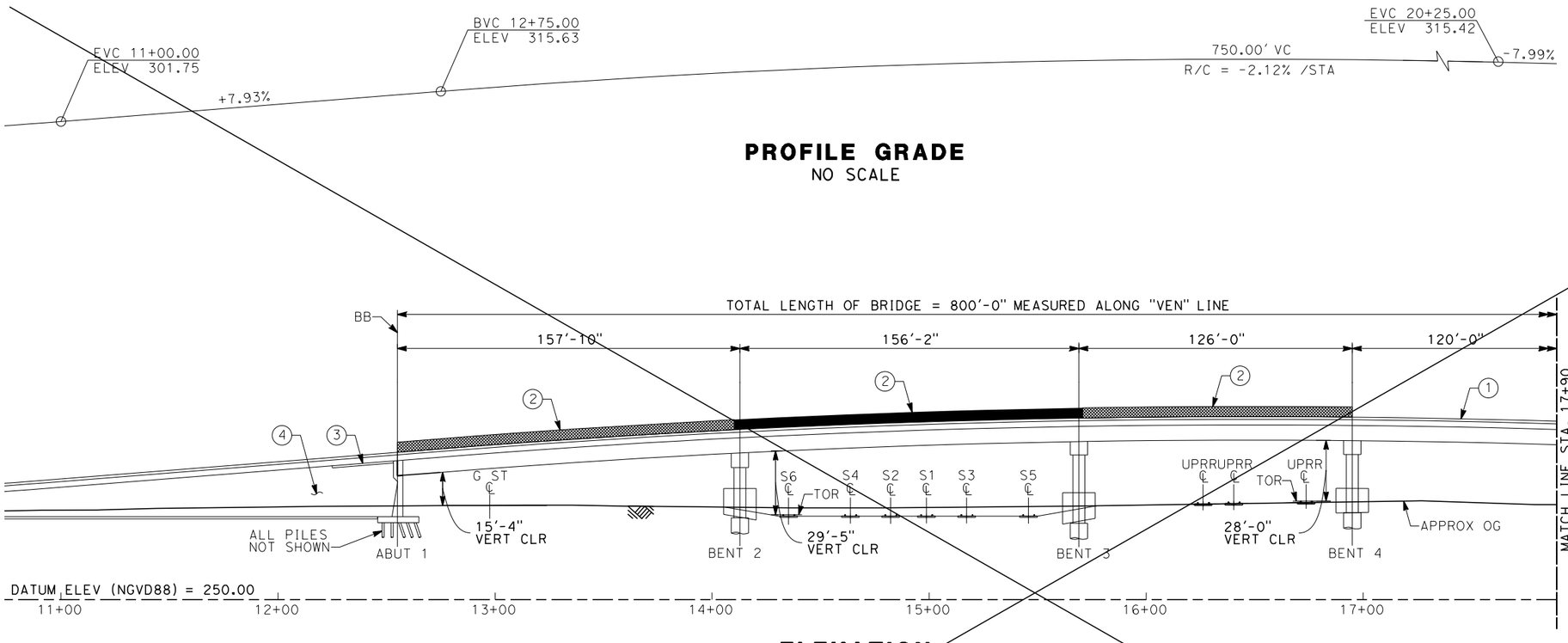

PROFILE GRADE
NO SCALE

ELEVATION
SCALE: 1"=30'-0"

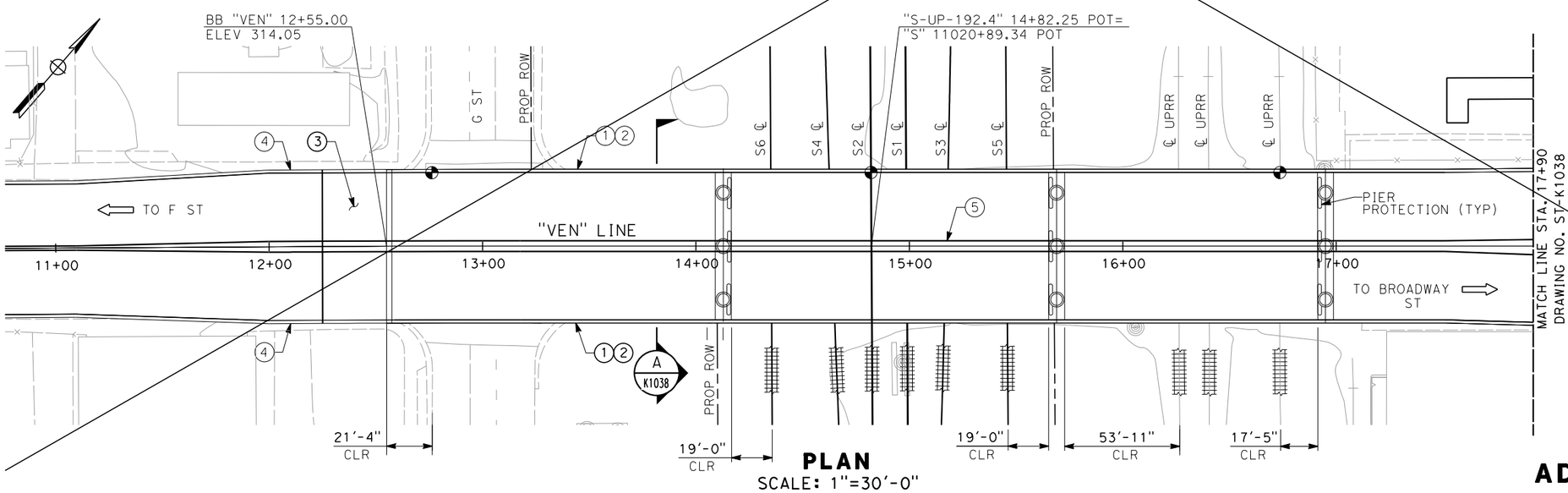

PLAN
SCALE: 1"=30'-0"

NOTES:

1. CONCRETE BARRIER (TYPE 736 MODIFIED)
2. AR FENCE
3. STRUCTURE APPROACH SLAB
4. MSE RETAINING WALL
5. BARRIER CURB
6. FOR UTILITY INFORMATION, SEE UTILITY BASE MAP PLANS.
7. FOR INTRUSION DETECTION/PROTECTION, SEE ALIGNMENT PLANS.

LEGEND:

- INDICATES DIRECTION OF TRAFFIC
- INDICATES POINT OF MINIMUM VERTICAL CLEARANCE
- INDICATES RAILROAD AND HIGH-SPEED TRAIN TRACK

DELETED SHEET
ADDENDUM 6 - RFP HSR 11-16

REV	DATE	BY	CHK	APP	DESCRIPTION
A	11/12/12	PAT	ES	RC	SHEET DELETED FROM RECORD SET

DESIGNED BY M. BURGARD
DRAWN BY D. BARNHART
CHECKED BY E. MORAN
IN CHARGE Y. BERI
DATE 11/12/12

PROPOSED PRELIMINARY DESIGN

NOT FOR CONSTRUCTION

CALIFORNIA HIGH-SPEED RAIL AUTHORITY

CALIFORNIA HIGH-SPEED TRAIN PROJECT
SIERRA SUBDIVISION
PACKAGE 1B
ROADWAY
DRAFT GENERAL PLAN
VENTURA ST

CONTRACT NO.
DRAWING NO. ST-K1037
SCALE AS SHOWN
SHEET NO.

11/13/2012 ADDENDUM 6 - RFP HSR 11-16

Paul.Tonkin 11/12/2012 5:06:06 PM CAHSRP-r1.tbl PDF_half_black_200dpi.pbtglobal\americas\Jobs\S-F\131000\131577\4 Internal Project Data\4-01 Record Copies of Outgoing Documents\2012\2012.11.09 CP1B Dele

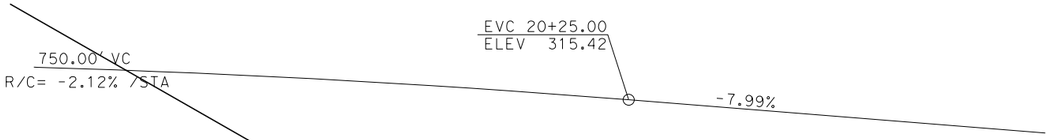

PROFILE GRADE
NO SCALE

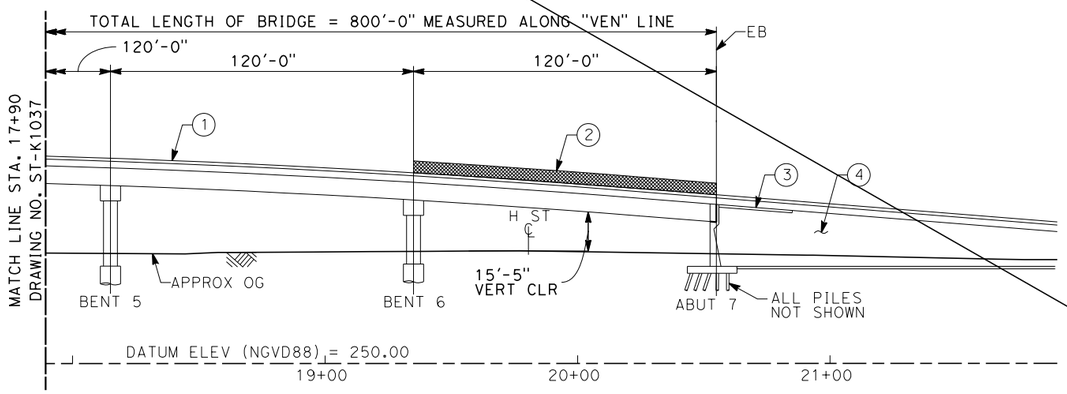

ELEVATION
SCALE: 1"=30'-0"

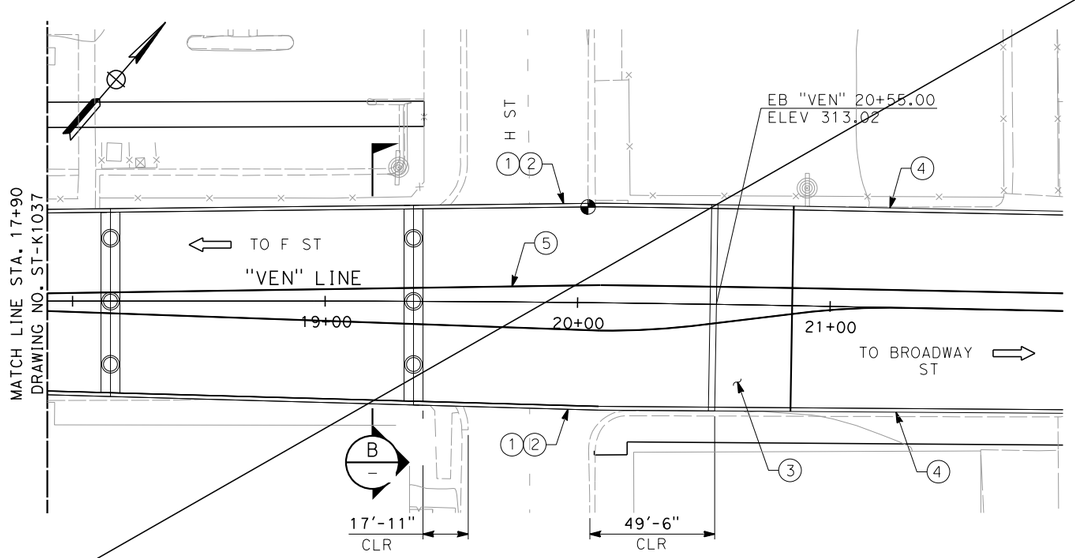

PLAN
SCALE: 1"=30'-0"

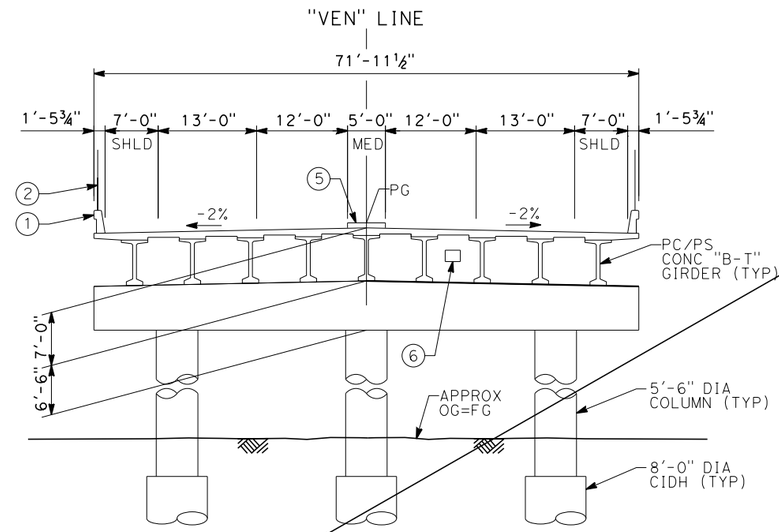

SECTION A
SCALE: 1"=10'-0"

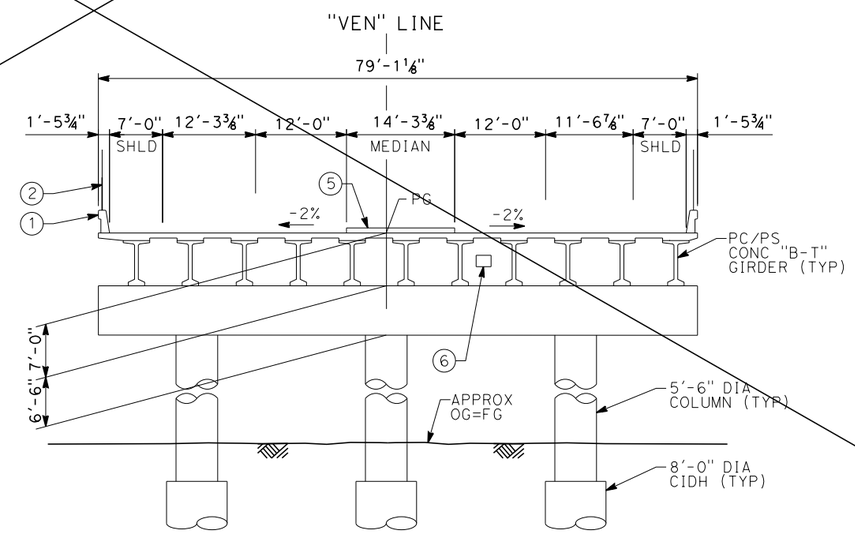

SECTION B
SCALE: 1"=10'-0"

NOTES:

1. CONCRETE BARRIER (TYPE 736 MODIFIED)
2. AR FENCE
3. STRUCTURE APPROACH SLAB
4. MSE RETAINING WALL
5. BARRIER CURB
6. FUTURE UTILITY OPENING
7. FOR UTILITY INFORMATION, SEE UTILITY BASE MAP PLANS.
8. FOR INTRUSION DETECTION/PROTECTION, SEE ALIGNMENT PLANS.

LEGEND:

- INDICATES DIRECTION OF TRAFFIC
- INDICATES POINT OF MINIMUM VERTICAL CLEARANCE
- INDICATES RAILROAD AND HIGH-SPEED TRAIN TRACK

DELETED SHEET
ADDENDUM 6 - RFP HSR 11-16

REV	DATE	BY	CHK	APP	DESCRIPTION
A	11/12/12	PAT	ES	RC	SHEET DELETED FROM RECORD SET

DESIGNED BY M. BURGARD
DRAWN BY D. BARNHART
CHECKED BY E. MORAN
IN CHARGE Y. BERI
DATE 11/12/12

PROPOSED PRELIMINARY DESIGN

NOT FOR CONSTRUCTION

CALIFORNIA HIGH-SPEED RAIL AUTHORITY

CALIFORNIA HIGH-SPEED TRAIN PROJECT
SIERRA SUBDIVISION
PACKAGE 1B
ROADWAY
DRAFT GENERAL PLAN
VENTURA ST

CONTRACT NO.
DRAWING NO. ST-K1038
SCALE AS SHOWN
SHEET NO.

Paul.Tonkin 11/13/2012 8:49:30 AM CAHSRP-r1.tbl PDF_half_black_200dpi.pltglobal\americas\Jobs\S-F\131000\131577\4 Internal Project Data\4-01 Record Copies of Outgoing Documents\2012\2012.11.09 CP1B Dele

11/13/2012 ADDENDUM 6 - RFP HSR 11-16