California High-Speed Train Project

Request for Proposal for Design-Build Services

RFP No.: HSR 11-16

Directive Drawings

Note:
For additional changes to the Directive Drawings, see the *Addenda Change Log for Addendum No. 6.*

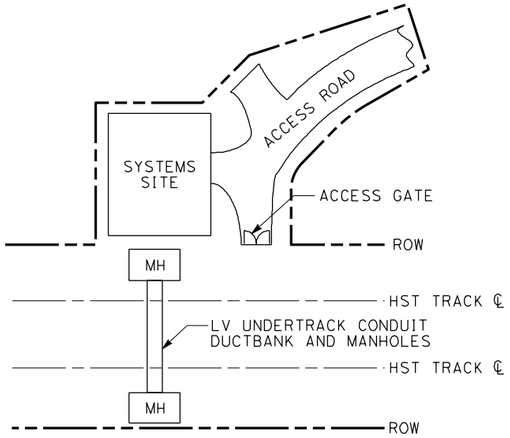

DIAGRAM A

AT-GRADE LOW-VOLTAGE UNDERTRACK CONDUIT DUCTBANK, ACCESS ROADS AND GATES AT SYSTEMS SITE

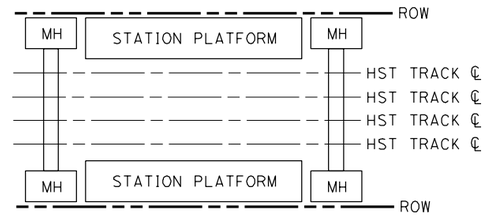

DIAGRAM B

LOW-VOLTAGE UNDERTRACK DUCTBANK AT STATION PLATFORMS

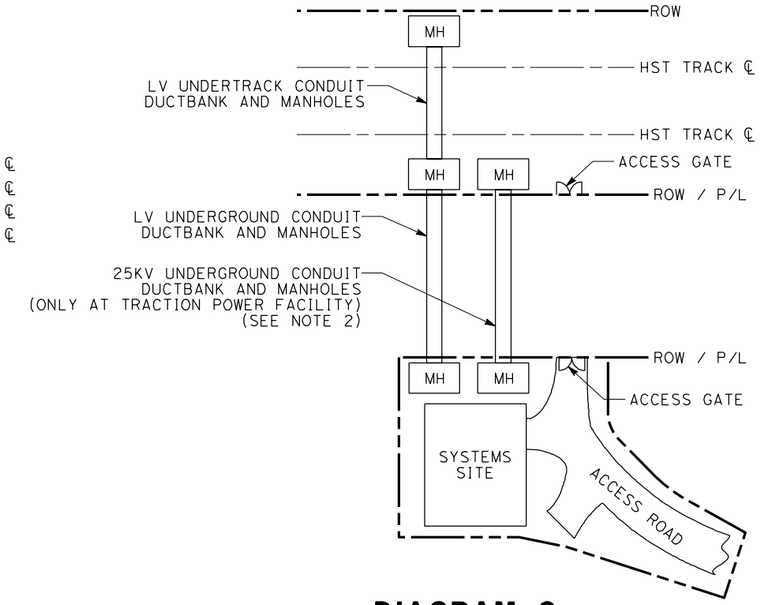

DIAGRAM C

AT-GRADE LOW-VOLTAGE UNDERTRACK AND UNDERGROUND CONDUIT DUCT BANK, 25KV UNDERGROUND CONDUIT DUCT BANK, ACCESS ROADS AND GATES AT SYSTEMS SITE LOCATED AWAY FROM HSR ROW

NOTES:

1. SYSTEM SITES INCLUDE TRACTION POWER FACILITIES, TRAIN CONTROL HOUSES, STANDALONE RADIO SITES.
2. TYPICALLY THERE ARE FOUR 25KV UNDERGROUND CONDUIT DUCTBANKS AND ACCOMPANYING MANHOLES PER TRACTION POWER SITE.
3. ACCESS ROADS AND ACCESS GATES ARE SHOWN FOR INFORMATION ONLY. CONSULT CIVIL DESIGN CRITERIA AND PRELIMINARY DESIGN PLANS FOR REQUIREMENTS AND DETAILS.
4. SEE TRACTION POWER AND COMMUNICATIONS DRAWINGS FOR DUCTBANK, MANHOLE CROSS SECTIONS, DETAILS AND ELEVATIONS.
5. FOR NUMBERS OF CONDUITS SEE COMMUNICATION DESIGN CRITERIA AND DRAWING "TYPICAL CROSS SECTION SYSTEMS LOW-VOLTAGE CONDUIT DUCTBANK".
6. INTERMEDIATE MANHOLES TO BE INCLUDED BASED UPON APPLICABLE STANDARDS, REGULATIONS AND CODES.

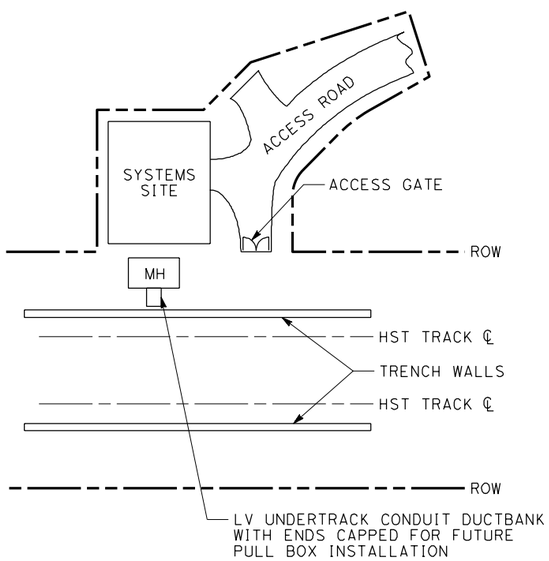

DIAGRAM D

TRENCH LOW-VOLTAGE UNDERTRACK CONDUIT DUCT BANK AND ACCESS ROADS AND GATES AT SYSTEMS SITE

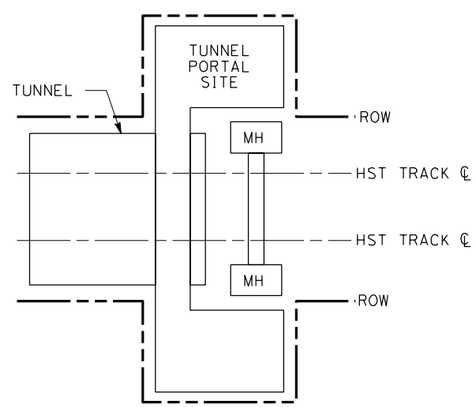

DIAGRAM E

AT-GRADE LOW-VOLTAGE UNDERTRACK CONDUIT DUCTBANK AT TUNNEL PORTAL SITES

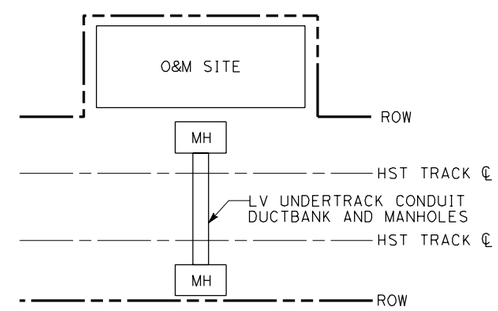

DIAGRAM F

AT-GRADE LOW-VOLTAGE UNDERTRACK CONDUIT DUCTBANK AT O&M FACILITIES UNDIVIDED

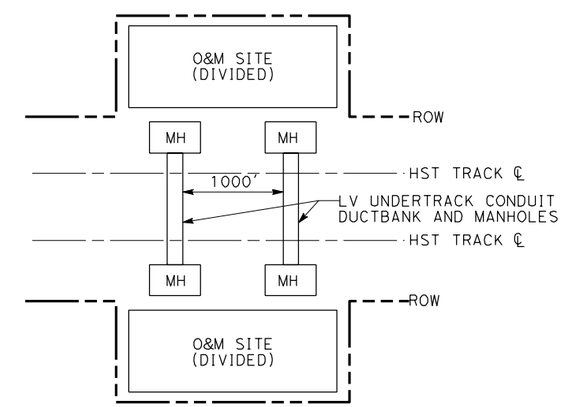

DIAGRAM G

AT-GRADE LOW-VOLTAGE UNDERTRACK CONDUIT DUCTBANK AT O&M FACILITIES DIVIDED BY MAINLINE TRACK

REV	DATE	BY	CHK	APP	DESCRIPTION

DESIGNED BY B. BANKS
DRAWN BY V. HUANTE
CHECKED BY C. DALOIA
IN CHARGE R. SCHMEDES
DATE 11/02/2012

PARSONS BRINCKERHOFF

CALIFORNIA HIGH-SPEED RAIL AUTHORITY

CALIFORNIA HIGH-SPEED TRAIN PROJECT SYSTEMS DIRECTIVE

TYPICAL CIVIL ACCOMMODATIONS FOR SYSTEMS AT SYSTEM SITES, STATIONS, TUNNEL PORTAL FACILITIES AND O&M FACILITIES

CONTRACT NO.
DRAWING NO. DD-SY-010
SCALE NO SCALE
SHEET NO.

11/13/2012 ADDENDUM 6 - RFP HSR 11-16

Huante 11/14/2012 2:39:45 PM CAHSRP_TBL CHSR_half_black.plt T:\13259B Calif High Speed Rail\CADD\Systems\Systems-Overall\DD-SY-010.dgn