California High-Speed Train Project

Request for Proposal for Design-Build Services

RFP No.: HSR 11-16

Book 4, Part A, Section 3
Contract Package 1B
North of Stanislaus St to South of Santa Clara St

08/22/2012 ADDENDUM 4 - RFP HSR 11-16

VOLUME 3 - ROADWAY WORK

DRAWING No.	REV	DRAWING DESCRIPTION
GE-A0012	A	PACKAGE 1B - ROADWAY - INDEX OF DRAWINGS
CV-B0005	A	PACKAGE 1B - ROADWAY - GENERAL NOTES
CV-B0006	A	PACKAGE 1B - ROADWAY - GENERAL STRUCTURAL NOTES
CV-B0007	A	PACKAGE 1B - ROADWAY - INDEX MAP
CV-T1013 B	B	PACKAGE 1B - ROADWAY - GRADE SEPARATION LAYOUT - STANISLAUS ST AND TUOLUMNE ST
CV-T1014	A	PACKAGE 1B - ROADWAY - GRADE SEPARATION PROFILE - STANISLAUS ST
CV-T1015	A	PACKAGE 1B - ROADWAY - GRADE SEPARATION PROFILE - TUOLUMNE ST
CV-T1018		PACKAGE 1B - ROADWAY - GRADE SEPARATION LAYOUT - TULARE ST (OVERPASS)
CV-T1019		PACKAGE 1B - ROADWAY - GRADE SEPARATION PROFILE - TULARE ST (OVERPASS)
CV-T1020		PACKAGE 1B - ROADWAY - GRADE SEPARATION PROFILE - G ST (TULARE ST OVERPASS)
~~CV-T1021~~		~~PACKAGE 1B - ROADWAY - GRADE SEPARATION LAYOUT - VENTURA ST~~
~~CV-T1022~~		~~PACKAGE 1B - ROADWAY - GRADE SEPARATION PROFILE - VENTURA ST~~
~~CV-T1023~~		~~PACKAGE 1B - ROADWAY - GRADE SEPARATION PROFILE - G ST~~
CV-T1024	A	PACKAGE 1B - ROADWAY - GRADE SEPARATION LAYOUT - FRESNO STREET
CV-T1025	A	PACKAGE 1B - ROADWAY - GRADE SEPARATION PROFILE - FRESNO STREET
CV-T1026	A	PACKAGE 1B - ROADWAY - GRADE SEPARATION PROFILE - G STREET AT FRESNO STREET
CV-T1027	A	PACKAGE 1B - ROADWAY - GRADE SEPARATION LAYOUT - VENTURA ST
CV-T1028	A	PACKAGE 1B - ROADWAY - GRADE SEPARATION PROFILE - VENTURA ST
CV-T1029	A	PACKAGE 1B - ROADWAY - GRADE SEPARATION PROFILE - F ST/G ST/H ST
CV-T3007	A	PACKAGE 1B - ROADWAY/GRADE SEPARATION - TYPICAL SECTIONS
CV-T3008	A	PACKAGE 1B - ROADWAY/GRADE SEPARATION - TYPICAL SECTIONS
CV-T3009	A	PACKAGE 1B - ROADWAY/GRADE SEPARATION - TYPICAL SECTIONS
CV-T3010	A	PACKAGE 1B - ROADWAY/GRADE SEPARATION - TYPICAL SECTIONS
CV-T3011	A	PACKAGE 1B - ROADWAY/GRADE SEPARATION - TYPICAL SECTIONS
CV-T3012	A	PACKAGE 1B - ROADWAY/GRADE SEPARATION - TYPICAL SECTIONS
CV-T3013	A	PACKAGE 1B - ROADWAY/GRADE SEPARATION - TYPICAL SECTIONS
ST-K1030	A	PACKAGE 1B - ROADWAY - DRAFT GENERAL PLAN - STANISLAUS ST - SHEET 1 OF 2
ST-K1031	A	PACKAGE 1B - ROADWAY - DRAFT GENERAL PLAN - STANISLAUS ST - SHEET 2 OF 2
~~ST-K1032~~		~~PACKAGE 1B - ROADWAY - DRAFT GENERAL PLAN - TUOLMNE ST - SHEET 1 OF 2~~
~~ST-K1033~~		~~PACKAGE 1B - ROADWAY - DRAFT GENERAL PLAN - TUOLMNE ST - SHEET 2 OF 2~~
ST-K1036	A	PACKAGE 1B - ROADWAY - DRAFT GENERAL PLAN - G ST (VENTURA ST OVERPASS)
~~ST-K1037~~		~~PACKAGE 1B - ROADWAY - DRAFT GENERAL PLAN - VENTURA ST - SHEET 1 OF 2~~
~~ST-K1038~~		~~PACKAGE 1B - ROADWAY - DRAFT GENERAL PLAN - VENTURA ST - SHEET 2 OF 2~~
~~ST-K1039~~		~~PACKAGE 1B - ROADWAY - DRAFT GENERAL PLAN - STANISLAUS ST - PEDESTRIAN BRIDGE~~
~~ST-K1040~~		~~PACKAGE 1B - ROADWAY - DRAFT GENERAL PLAN - VENTURA ST - PEDESTRIAN BRIDGE~~
ST-K1041	A	PACKAGE 1B - ROADWAY - DRAFT GENERAL PLAN - G ST (FRESNO ST OVERPASS)
ST-K1042	A	PACKAGE 1B - ROADWAY - DRAFT GENERAL PLAN - STANISLAUS ST - PEDESTRIAN BRIDGE
ST-K1043	B	PACKAGE 1B - ROADWAY - DRAFT GENERAL PLAN - STANISLAUS ST - PEDESTRIAN BRIDGE
~~ST-K1044~~	~~A~~	~~PACKAGE 1B - ROADWAY - DRAFT GENERAL PLAN - STANISLAUS ST - PEDESTRIAN BRIDGE~~

B

ADDENDUM 4 - RFP HSR 11-16

08/22/2012 ADDENDUM 4 - RFP HSR 11-16

REV	DATE	BY	CHK	APP	DESCRIPTION
B	2012-07	IJ	BR	RP	REVISED FOR ADDENDUM 4
A	2012-06	VO	BR	RP	REVISED FOR ADDENDUM 3

DESIGNED BY R. DEASON
DRAWN BY V. ORTEGA
CHECKED BY A. BRUNDAGE
IN CHARGE O. EARLE
DATE 07/13/12

URS | HMM | ARUP
CALIFORNIA HIGH-SPEED TRAIN

CALIFORNIA HIGH-SPEED RAIL AUTHORITY

CALIFORNIA HIGH-SPEED TRAIN PROJECT
SIERRA SUBDIVISION
PACKAGE 1B
GENERAL
INDEX OF DRAWINGS

CONTRACT NO.
DRAWING NO. GE-A0012-B4
SCALE NO SCALE
SHEET NO.

J0553823 7/13/2012 3:45:11 PM CAHSRP-r1.tbl CHSR_PDF_half_black.pltG:_Sacramento\URS\235413 CA HSR Fresno Palmdale\16.0 Drawings\N-30% RBNSF Fresno\Sheet Files\General\S1-CV-B-0012.dgn

RETAINING WALL DATA

NO.	LOCATIONS BEGIN	LOCATIONS END	LENGTH	AVG HEIGHT
1	28.00′ LT "STN" 16+22.52	28.00′ LT "STN" 20+01.08	379′	15′
2	28.00′ RT "STN" 16+91.14	28.00′ RT "STN" 20+01.08	310′	15′
3	28.00′ LT "STN" 27+96.08	28.00′ LT "STN" 30+78.65	283′	10′
4	28.00′ RT "STN" 27+96.08	28.00′ RT "STN" 30+77.33	281′	10′

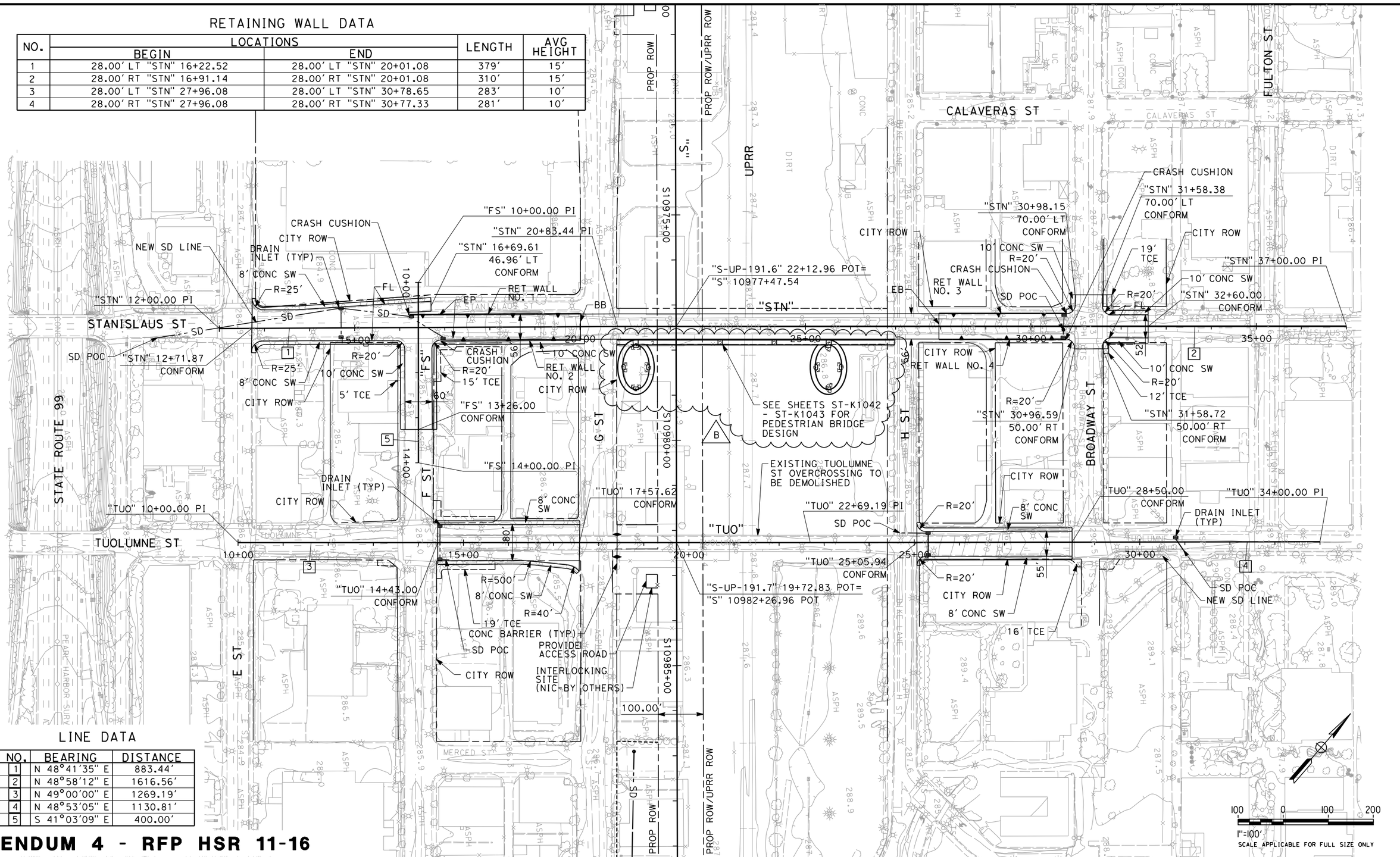

LINE DATA

NO.	BEARING	DISTANCE
1	N 48°41′35″ E	883.44′
2	N 48°58′12″ E	1616.56′
3	N 49°00′00″ E	1269.19′
4	N 48°53′05″ E	1130.81′
5	S 41°03′09″ E	400.00′

ADDENDUM 4 - RFP HSR 11-16

REV	DATE	BY	CHK	APP	DESCRIPTION
B	2012-07	IJ	BR	RP	REVISED FOR ADDENDUM 4
A	2012-06	VO	BR	RP	REVISED FOR ADDENDUM 3

DESIGNED BY J. NETTLETON
DRAWN BY V. ORTEGA
CHECKED BY B. RAWSON
IN CHARGE Q. EARLE
DATE 07/13/12

PROPOSED PRELIMINARY DESIGN

NOT FOR CONSTRUCTION

URS | HMM | ARUP
CALIFORNIA HIGH-SPEED TRAIN

CALIFORNIA HIGH-SPEED RAIL AUTHORITY

CALIFORNIA HIGH-SPEED TRAIN PROJECT
SIERRA SUBDIVISION
PACKAGE 1B
ROADWAY
GRADE SEPARATION LAYOUT
STANISLAUS ST AND TUOLUMNE ST

CONTRACT NO.
DRAWING NO. CV-T1013-B4
SCALE AS SHOWN
SHEET NO.

08/22/2012 ADDENDUM 4 - RFP HSR 11-16

7/16/2012 12:31:55 PM CAHSRP-r1.tbl CHSR_PDF_half_black.pltG:_Sacramento\URS\235413 CA HSR Fresno Palmdale\16.0 Drawings\N-30% RBNSF Fresno\Sheet Files\Civil\Package 1B\S1-CV-T1013-A3.dgn
JO553823

PROFILE GRADE

NO SCALE

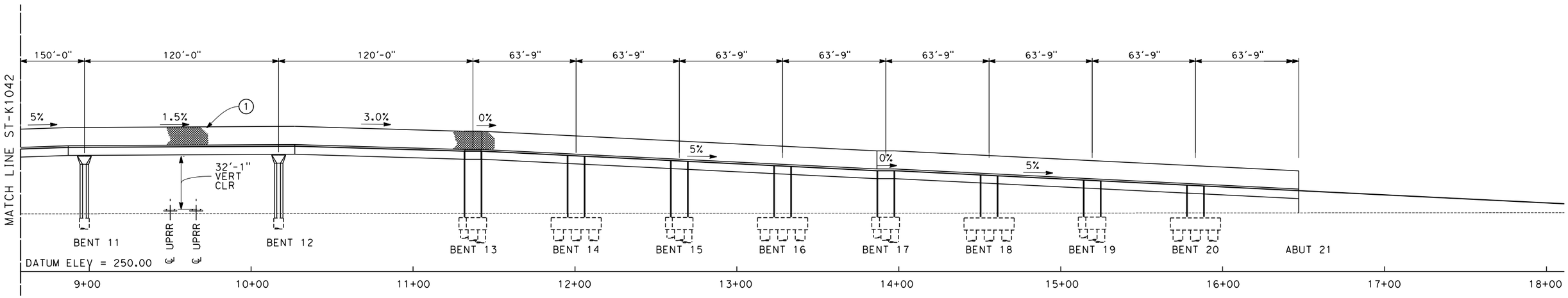

DEVELOPED ELEVATION

SCALE: 1"=30'-0"

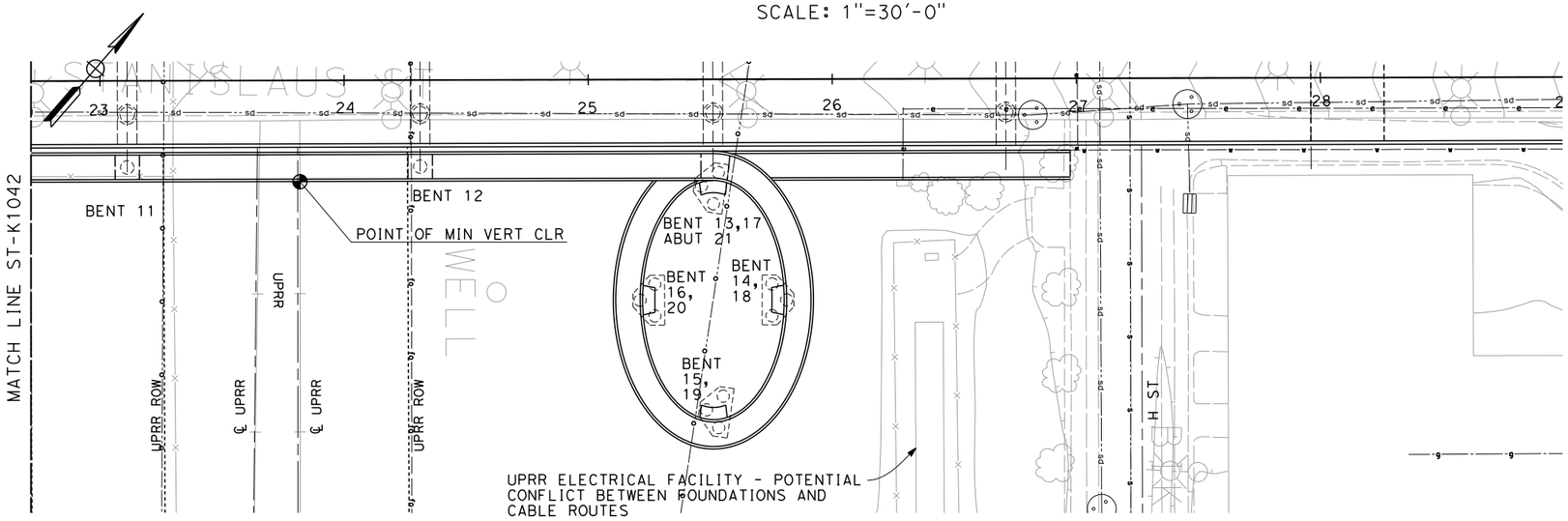

PLAN

SCALE: 1"=30'-0"

NOTES:

1. AR FENCE
2. PEDESTRIAN FENCE
3. SOLID PLATE ON AR FENCE

REPLACEMENT SHEET

ADDENDUM 4 - RFP HSR 11-16

REV	DATE	BY	CHK	APP	DESCRIPTION
B	2012-07	FP	AA	RP	REVISED FOR ADDENDUM 4
A	2012-06	FP	AA	RP	REVISED FOR ADDENDUM 3

DESIGNED BY M. FISHER
DRAWN BY F. PALERMO
CHECKED BY A. ARMSTRONG
IN CHARGE R. COFFIN
DATE 07/13/12

PROPOSED PRELIMINARY DESIGN

NOT FOR CONSTRUCTION

URS | HMM | ARUP
CALIFORNIA HIGH-SPEED TRAIN

CALIFORNIA HIGH-SPEED RAIL AUTHORITY

CALIFORNIA HIGH-SPEED TRAIN PROJECT
SIERRA SUBDIVISION
PACKAGE 1B
ROADWAY
DRAFT GENERAL PLAN
STANISLAUS ST - PEDESTRIAN BRIDGE

CONTRACT NO.
DRAWING NO. ST-K1043-B4
SCALE AS SHOWN
SHEET NO.

08/22/2012 ADDENDUM 4 - RFP HSR 11-16

eron.sudhauser7/16/2012 11:18:09 AM CAHSRP-r1.tbl PDF_half_black_200dpi.pktglobal\americas\Jobs\S-F\131000\131577\4 Internal Project Data\4-03 Drawings\4-03-03 30% Design\4-03-03-05 Design Sheets\Structur