California High-Speed Train Project

Request for Proposal for Design-Build Services

RFP No.: HSR 11-16

Contract Package 1B

North of Stanislaus St to South of Santa Clara St

06/29/2012 ADDENDUM 3 - RFP HSR 11-16

THIS PAGE INTENTIONALLY LEFT BLANK

CALIFORNIA
HIGH-SPEED RAIL AUTHORITY

PROPOSED PRELIMINARY DESIGN
CALIFORNIA HIGH-SPEED TRAIN PROJECT
SIERRA SUBDIVISION
CONTRACT PACKAGE 1B

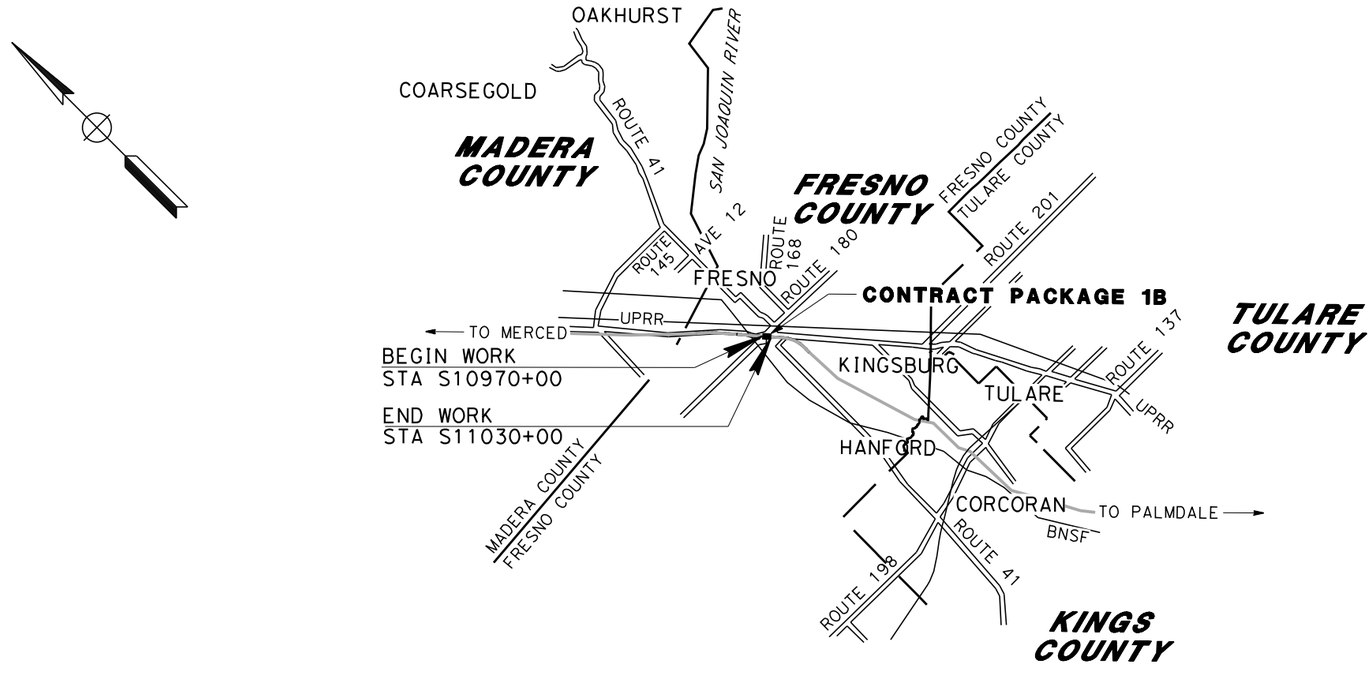

REGISTERED PROFESSIONAL ENGINEER
No.
Exp.
CIVIL
STATE OF CALIFORNIA

REV B
ADDENDUM 3 - RFP HSR 11-16
JUNE 2012

PROJECT LOCATION MAP

U.S. Department of Transportation
Federal Railroad Administration

URS | HMM | ARUP

CONTRACT No.

06/29/2012 ADDENDUM 3 - RFP HSR 11-16

eron.sudhausen 6/12/2012 3:00:47 PM \\global\americas\Jobs\S-F\131000\131577\4 Internal Project Data\4-03 Drawings\4-03-03 30% Design\4-03-03-05 Design Sheets\General\Package 1B\1SB-GE-D0001-B3.dgn

VOLUME 2 - TRACK STRUCTURES

DRAWING No.	REV	DRAWING DESCRIPTION
GE-A0011	B	PACKAGE 1B - TRACK STRUCTURES - INDEX OF DRAWINGS
ST-B0001		PACKAGE 1B - TRACK STRUCTURES - GENERAL NOTES - SHEET 1 OF 2
ST-B0002	A	PACKAGE 1B - TRACK STRUCTURES - GENERAL NOTES - SHEET 2 OF 2
ST-B0004	A	PACKAGE 1B - TRACK STRUCTURES - KEY MAP
ST-K1004	A	PACKAGE 1B - TRACK STRUCTURES - FRESNO STREET OVERPASS - PLAN AND ELEVATION
ST-K1005		PACKAGE 1B - TRACK STRUCTURES - TULARE STREET OVERPASS - PLAN AND ELEVATION
ST-K1006		PACKAGE 1B - TRACK STRUCTURES - TULARE STREET OVERPASS - UPRR BRIDGE - PLAN AND ELEVATION
ST-K1007	A	PACKAGE 1B - TRACK STRUCTURES - VENTURA STREET OVERPASS - PLAN AND ELEVATION
ST-K1008	A	PACKAGE 1B - TRACK STRUCTURES - VENTURA STREET OVERPASS - UPRR BRIDGE - PLAN AND ELEVATION

ADDENDUM 3 - RFP HSR 11-16

REV	DATE	BY	CHK	APP	DESCRIPTION
B	2012-06	ES	SB	RP	REVISED FOR ADDENDUM 3
A	2012-05	AA	SB	RP	FRESNO STREET IN CONTRACT

DESIGNED BY R. DEASON
DRAWN BY V. ORTEGA
CHECKED BY A. BRUNDAGE
IN CHARGE Q. EARLE
DATE 06/12/12

PROPOSED PRELIMINARY DESIGN

NOT FOR CONSTRUCTION

URS | HMM | ARUP
CALIFORNIA HIGH-SPEED TRAIN

CALIFORNIA HIGH-SPEED RAIL AUTHORITY

CALIFORNIA HIGH-SPEED TRAIN PROJECT
SIERRA SUBDIVISION
PACKAGE 1B
GENERAL
INDEX OF DRAWINGS

CONTRACT NO.
DRAWING NO. GE-A0011-B3
SCALE NO SCALE
SHEET NO.

eron.sudhauser6/12/2012 2:36:23 PM CAHSRP-r1.tbl PDF_half_black_200dpi.pktglobal\americas\Jobs\S-F\131000\131577\4 Internal Project Data\4-03 Drawings\4-03-03 30% Design\4-03-03-05 Design Sheets\General\

06/29/2012 ADDENDUM 3 - RFP HSR 11-16

GENERAL NOTES
LOAD AND RESISTANCE FACTOR DESIGN

DESIGN:	HIGH SPEED RAIL DESIGN CRITERIA, AASHTO LRFD BRIDGE DESIGN SPECIFICATIONS 4TH EDITION AND ~~CALTRANS AMENDMENTS~~, ACI 350 (WATER CONVEYING STRUCTURES) A
STANDARD SPECIFICATIONS:	HIGH SPEED RAIL SPECIFICATIONS, CALTRANS STANDARD SPECIFICATIONS DATED MAY 2006
SEISMIC DESIGN:	HIGH SPEED RAIL DESIGN CRITERIA, CALTRANS SEISMIC DESIGN CRITERIA (SDC) VERSION 1.6, NOVEMBER 2010
LIVE LOADING:	COOPER E50 - HST ROUTE COOPER E80 - UPRR ROUTE (INC SHOOFLYS) A
WIND LOAD:	100 MPH WIND VELOCITY
REINFORCED CONCRETE:	fy = 60 KSI f'c = SEE CONCRETE STRENGTH AND TYPE LIMITS
PRESTRESSED CONCRETE:	LOW RELAXATION STRANDS fpy = 243 KSI fpu = 270 KSI f'ci = 5 KSI AT TIME OF RELEASE f'c = 7 KSI AT 28 DAYS
~~PILES:~~	~~CLASS 200 PILES~~ ~~B2-8~~
	~~CLASS 140 PILES~~ ~~B2-5~~ ~~CLASS 90 PILES~~ A

THE ARS CURVES SHOWN BELOW ARE FOR PRELIMIANRY DESIGN. REVISED ARS CURVES WILL BE PROVIDED FOR DETAILED DESIGN. A

ARS: MCE (5%)

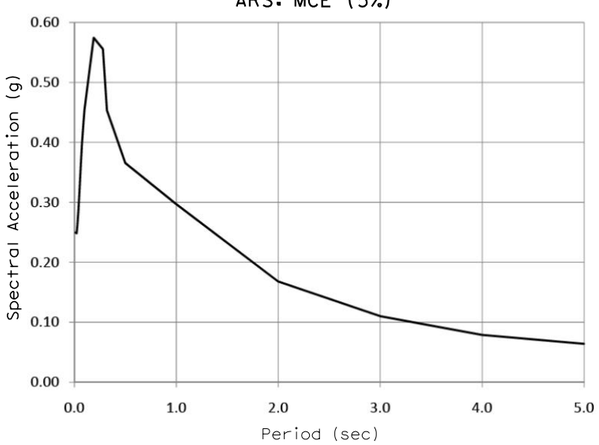

ARS: OBE (5%)

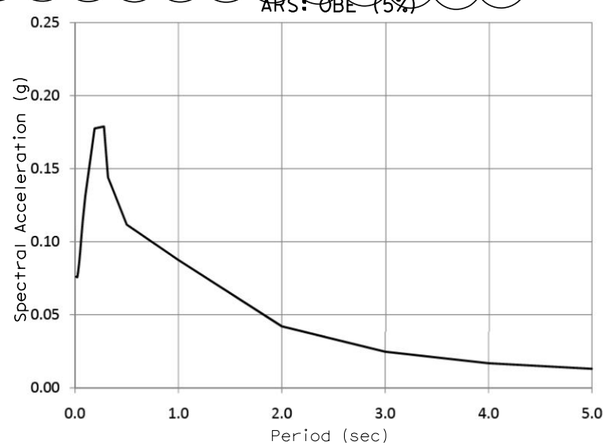

GENERAL STRUCTURAL NOTES

1. PILE/SHAFT LENGTHS TO BE DETERMINED.
2. EMBEDDED ITEMS REQUIRED FOR UTILITY INSTALLATIONS ARE NOT SHOWN ON THE STRUCTURAL DRAWINGS. CONTRACTOR SHALL REFER TO THE UTILITY DRAWINGS FOR THE LOCATIONS AND DETAILS OF THESE ITEMS.
3. MSE WALL REINFORCEMENT AND PANEL TO BE DETERMINED.
4. BRIDGE ARTICULATION IS DENOTED BY:
   'M' FOR MOVING SUPPORTS (SLIDING BEARINGS)
   AND
   'F' FOR FIXED SUPPORTS (FIXED BEARINGS OR CAST-IN COLUMNS).
   WHERE A COLUMN SUPPORTS TWO BEARING SETS, THE ARTICULATION OF EACH SET IS INDICATED SEPARATELY.

A

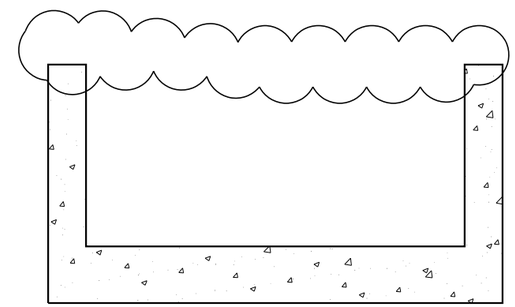

A

STRUCTURAL CONCRETE, GRADE SEPARATION
f'c = 5 ksi at 28 days

CONCRETE STRENGTH AND TYPE LIMITS
NO SCALE

ADDENDUM 3 - RFP HSR 11-16

REV	DATE	BY	CHK	APP	DESCRIPTION
A	2012-06	FP	AA	RP	REVISED FOR ADDENDUM A

DESIGNED BY S.T. MAK
DRAWN BY F. PALERMO
CHECKED BY A. ARMSTRONG
IN CHARGE R. COFFIN
DATE 06/12/12

PROPOSED PRELIMINARY DESIGN

NOT FOR CONSTRUCTION

URS | HMM | ARUP
CALIFORNIA HIGH-SPEED TRAIN

CALIFORNIA HIGH-SPEED RAIL AUTHORITY

CALIFORNIA HIGH-SPEED TRAIN PROJECT
SIERRA SUBDIVISION
PACKAGE 1B
TRACK STRUCTURES GENERAL NOTES
SHEET 2 OF 2

CONTRACT NO.
DRAWING NO. ST-B0002-A3
SCALE AS SHOWN
SHEET NO.

andrew.armstrong 3/2012 10:21:31 AM CAHSRP-r1.tbl PDF_half_black_200dpi.pltglobal\americas\Jobs\S-F\131000\131577\4 Internal Project Data\4-03 Drawings\4-03-03 30% Design\4-03-03-05 Design Sheets\Structur

06/29/2012 ADDENDUM 3 - RFP HSR 11-16

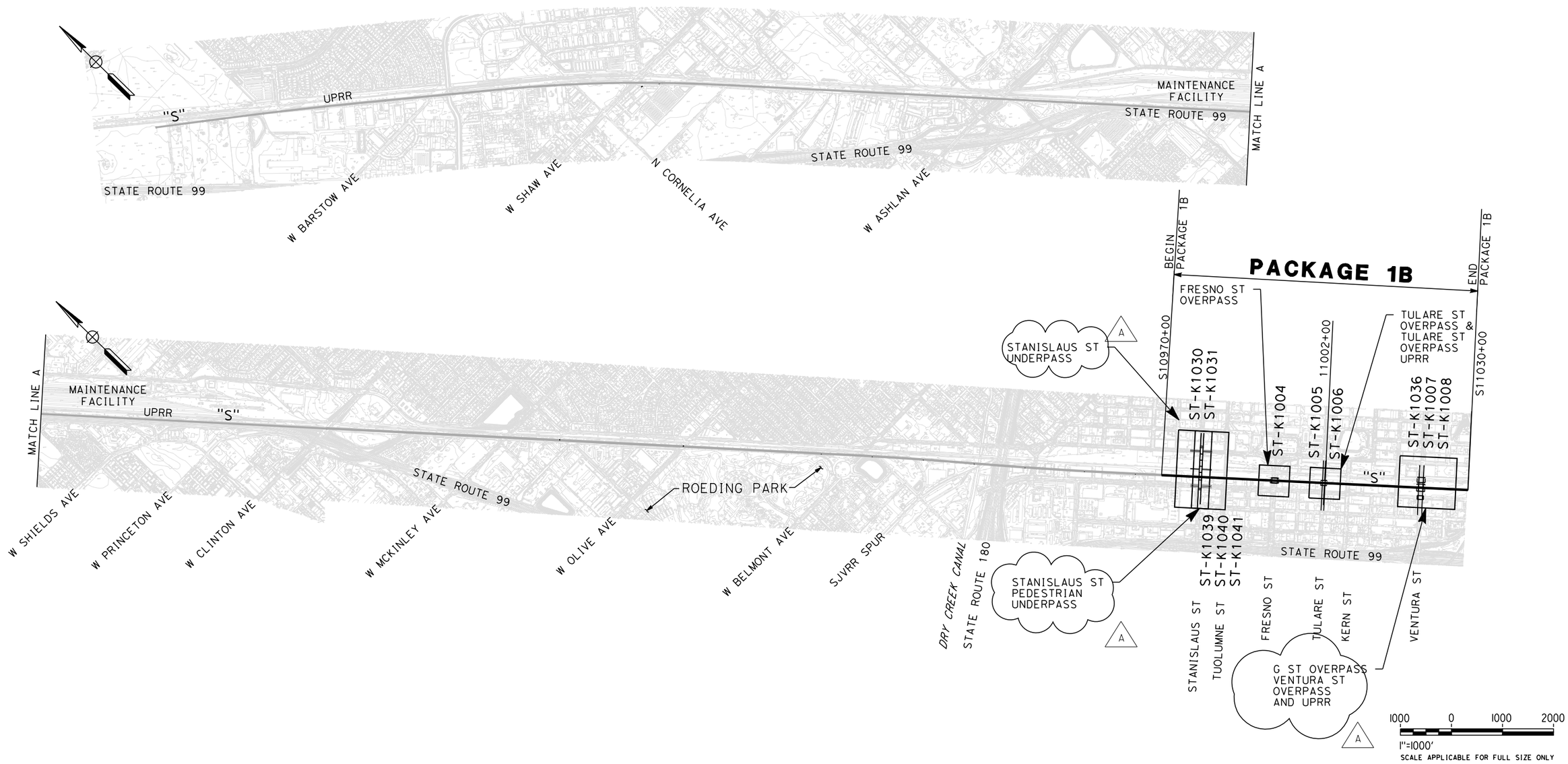

ADDENDUM 3 - RFP HSR 11-16

REV	DATE	BY	CHK	APP	DESCRIPTION
A	2012-06	FP	AA	RP	REVISED FOR ADDENDUM A

DESIGNED BY S.T. MAK
DRAWN BY F. PALERMO
CHECKED BY A. ARMSTRONG
IN CHARGE R. COFFIN
DATE 06/12/12

PROPOSED PRELIMINARY DESIGN

NOT FOR CONSTRUCTION

URS | HMM | ARUP
CALIFORNIA HIGH-SPEED TRAIN

CALIFORNIA HIGH-SPEED RAIL AUTHORITY

CALIFORNIA HIGH-SPEED TRAIN PROJECT
SIERRA SUBDIVISION
PACKAGE 1B
TRACK STRUCTURES
KEY MAP

CONTRACT NO.
DRAWING NO. ST-B0004-A3
SCALE AS SHOWN
SHEET NO.

06/29/2012 ADDENDUM 3 - RFP HSR 11-16

eron.sudhauser6/13/2012 11:35:32 AM CAHSRP-r1.tbl PDF_half_black_200dpi.pltglobal\americas\Jobs\S-F\131000\131577\4 Internal Project Data\4-03 Drawings\4-03-03 30% Design\4-03-03-05 Design Sheets\Structur

TOP OF RAIL "S2" LINE

NO SCALE

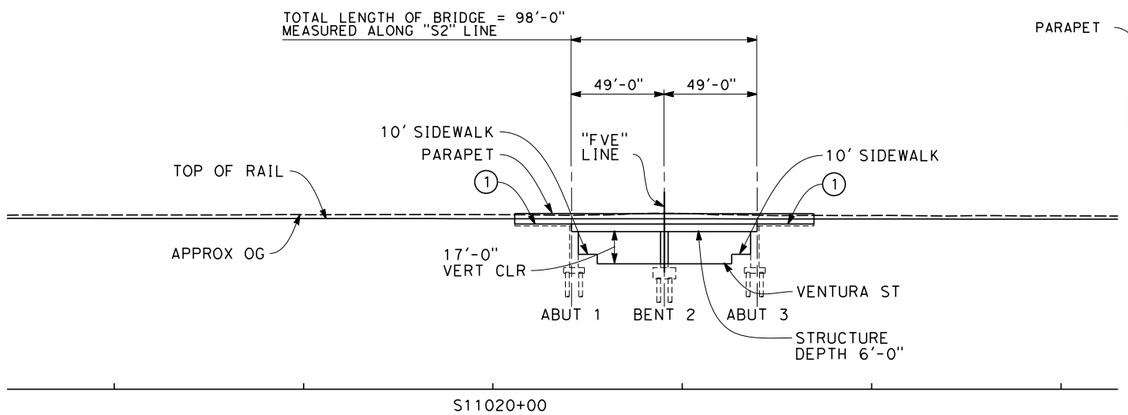

ELEVATION

SCALE 1" = 40'

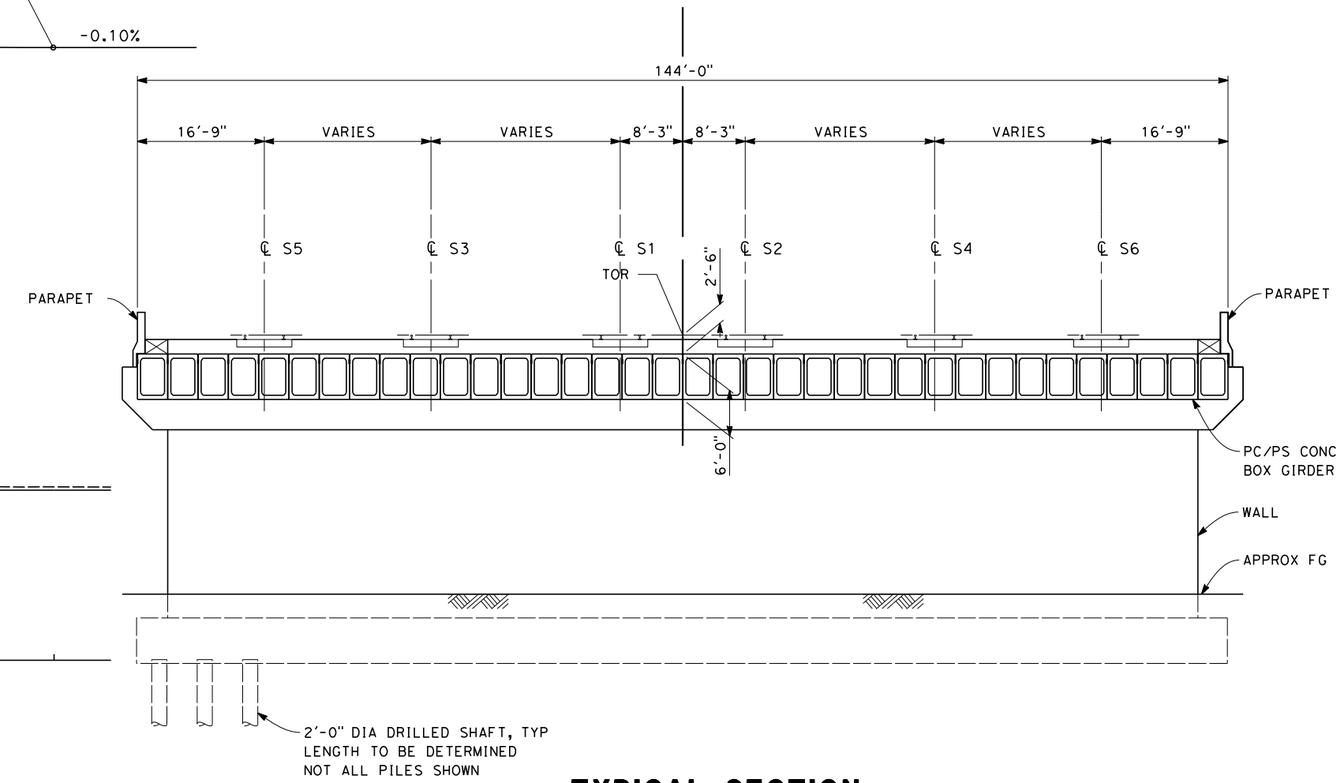

TYPICAL SECTION

SCALE: 1" = 10'

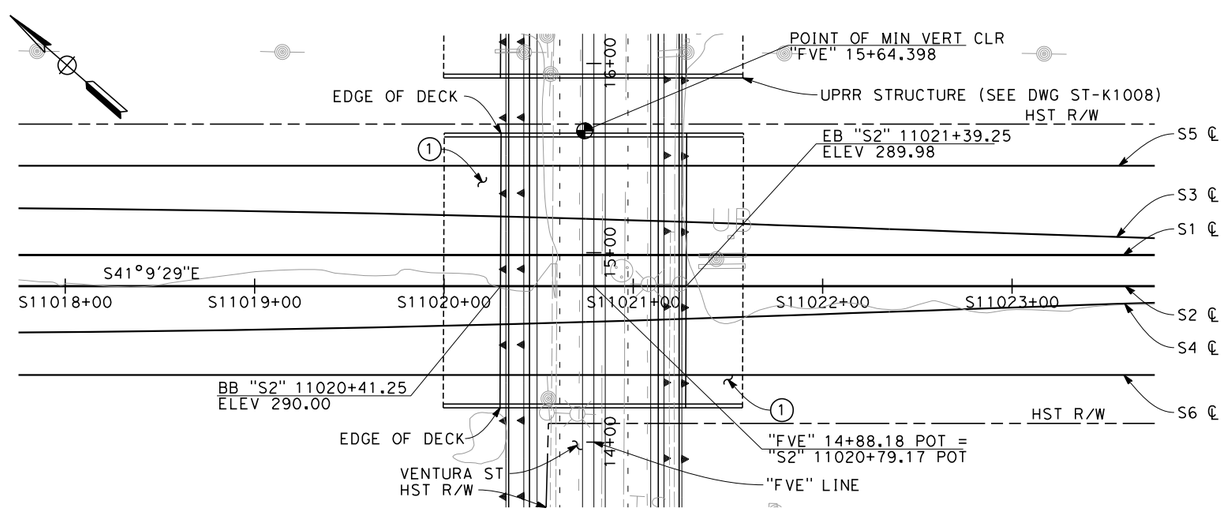

PLAN

SCALE 1" = 40'

NOTES:

1. STRUCTURE APPROACH SLAB
2. RETAINING WALL (TYPE TO BE DETERMINED)

ADDENDUM 3 - RFP HSR 11-16

REV	DATE	BY	CHK	APP	DESCRIPTION
A	2012-06	FP	AA	RP	REVISED FOR ADDENDUM A

DESIGNED BY S.T. MAK
DRAWN BY J. VALENZUELA
CHECKED BY A. ARMSTRONG
IN CHARGE R. COFFIN
DATE 06/12/12

PROPOSED PRELIMINARY DESIGN

NOT FOR CONSTRUCTION

URS | HMM | ARUP
CALIFORNIA HIGH-SPEED TRAIN

CALIFORNIA HIGH-SPEED RAIL AUTHORITY

CALIFORNIA HIGH-SPEED TRAIN PROJECT
SIERRA SUBDIVISION
PACKAGE 1B
TRACK STRUCTURES
VENTURA STREET OVERPASS
PLAN AND ELEVATION

CONTRACT NO.
DRAWING NO. ST-K1007-A3
SCALE AS SHOWN
SHEET NO.

frank.palermo 6/12/2012 5:15:07 PM CAHSRP-r1.tbl PDF_half_black_200dpi.pltglobal\americas\Jobs\S-F\131000\131577\4 Internal Project Data\4-03 Drawings\4-03-03 30% Design\4-03-03-05 Design Sheets\Structur

06/29/2012 ADDENDUM 3 - RFP HSR 11-16

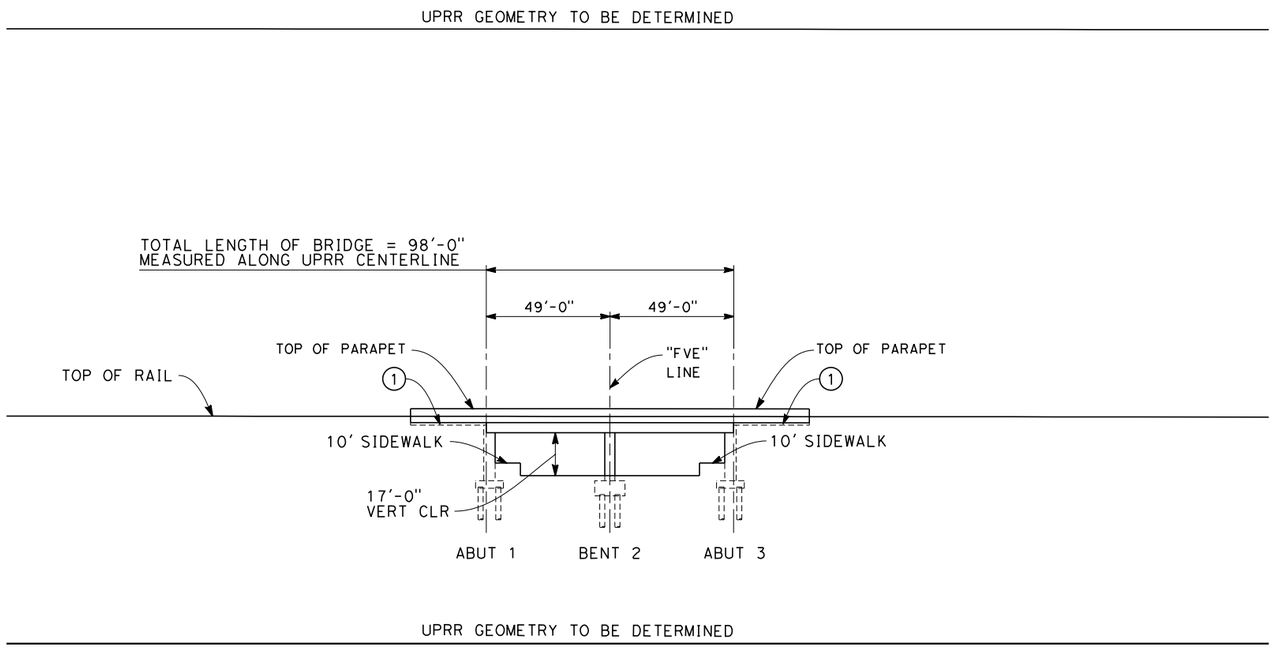

ELEVATION

SCALE: 1"=30'-0"

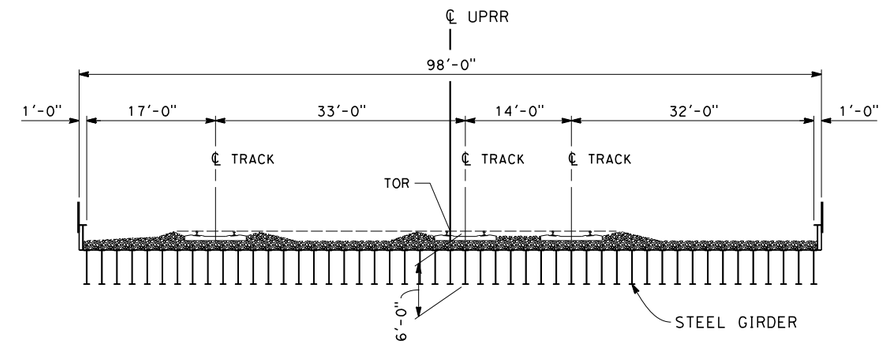

TYPICAL SECTION

SCALE: 1"=10'-0"

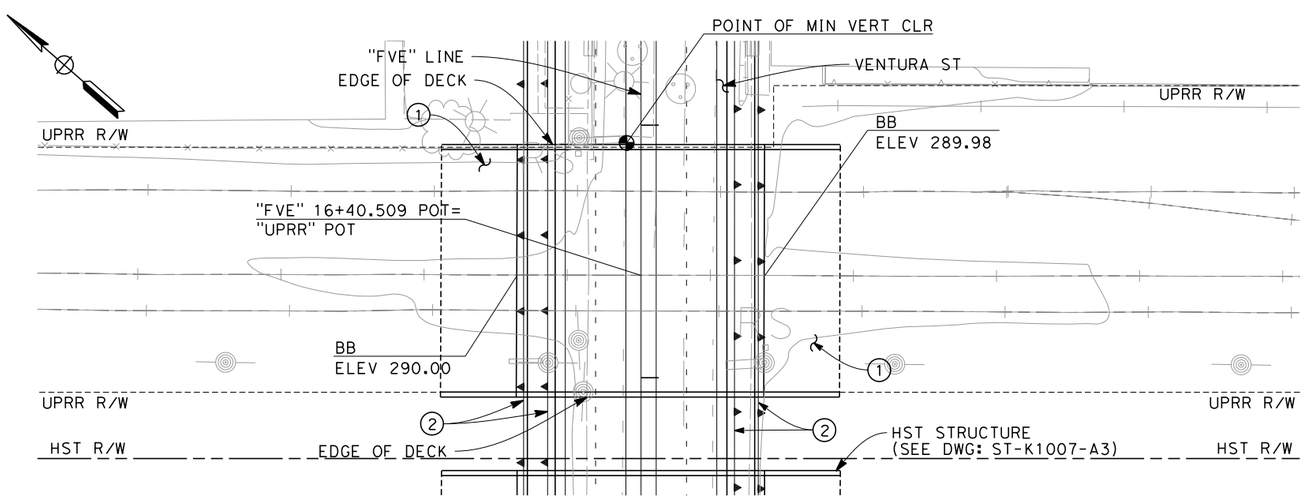

PLAN

SCALE: 1"=30'-0"

NOTES:

1. APPROACH SLAB
2. RETAINING WALL (TYPE TO BE DETERMINED)

ADDENDUM 3 - RFP HSR 11-16

REV	DATE	BY	CHK	APP	DESCRIPTION
A	2012-06	FP	AA	RP	REVISED FOR ADDENDUM A

DESIGNED BY S.T. MAK
DRAWN BY J. VALENZUELA
CHECKED BY A. ARMSTRONG
IN CHARGE R. COFFIN
DATE 06/12/12

PROPOSED PRELIMINARY DESIGN

NOT FOR CONSTRUCTION

URS | HMM | ARUP
CALIFORNIA HIGH-SPEED TRAIN

CALIFORNIA HIGH-SPEED RAIL AUTHORITY

CALIFORNIA HIGH-SPEED TRAIN PROJECT
SIERRA SUBDIVISION
PACKAGE 1B
TRACK STRUCTURES
VENTURA STREET OVERPASS
UPRR BRIDGE - PLAN AND ELEVATION

CONTRACT NO.
DRAWING NO. ST-K1008-A3
SCALE AS SHOWN
SHEET NO.

06/29/2012 ADDENDUM 3 - RFP HSR 11-16
andrew.armstrong 6/12/2012 6:36:59 PM CAHSRP-r1.tbl PDF_half_black_200dpi.pktglobal\americas\Jobs\S-F\131000\131577\4 Internal Project Data\4-03 Drawings\4-03-03 30% Design\4-03-03-05 Design Sheets\Structur

VOLUME 3 - ROADWAY WORK

DRAWING No.	REV	DRAWING DESCRIPTION
GE-A0012	A	PACKAGE 1B - ROADWAY - INDEX OF DRAWINGS
CV-B0005	A	PACKAGE 1B - ROADWAY - GENERAL NOTES
CV-B0006	A	PACKAGE 1B - ROADWAY - GENERAL STRUCTURAL NOTES
CV-B0007	A	PACKAGE 1B - ROADWAY - INDEX MAP
CV-T1013	A	PACKAGE 1B - ROADWAY - GRADE SEPARATION LAYOUT - STANISLAUS ST AND TUOLUMNE ST
CV-T1014	A	PACKAGE 1B - ROADWAY - GRADE SEPARATION PROFILE - STANISLAUS ST
CV-T1015	A	PACKAGE 1B - ROADWAY - GRADE SEPARATION PROFILE - TUOLUMNE ST
CV-T1018		PACKAGE 1B - ROADWAY - GRADE SEPARATION LAYOUT - TULARE ST (OVERPASS)
CV-T1019		PACKAGE 1B - ROADWAY - GRADE SEPARATION PROFILE - TULARE ST (OVERPASS)
CV-T1020		PACKAGE 1B - ROADWAY - GRADE SEPARATION PROFILE - G ST (TULARE ST OVERPASS)
~~CV-T1021~~		~~PACKAGE 1B - ROADWAY - GRADE SEPARATION LAYOUT - VENTURA ST~~
~~CV-T1022~~		~~PACKAGE 1B - ROADWAY - GRADE SEPARATION PROFILE - VENTURA ST~~
~~CV-T1023~~		~~PACKAGE 1B - ROADWAY - GRADE SEPARATION PROFILE - G ST~~
CV-T1024	A	PACKAGE 1B - ROADWAY - GRADE SEPARATION LAYOUT - FRESNO STREET
CV-T1025	A	PACKAGE 1B - ROADWAY - GRADE SEPARATION PROFILE - FRESNO STREET
CV-T1026	A	PACKAGE 1B - ROADWAY - GRADE SEPARATION PROFILE - G STREET AT FRESNO STREET
CV-T1027	A	PACKAGE 1B - ROADWAY - GRADE SEPARATION LAYOUT - VENTURA ST
CV-T1028	A	PACKAGE 1B - ROADWAY - GRADE SEPARATION PROFILE - VENTURA ST
CV-T1029	A	PACKAGE 1B - ROADWAY - GRADE SEPARATION PROFILE - F ST/G ST/H ST
CV-T3007	A	PACKAGE 1B - ROADWAY/GRADE SEPARATION - TYPICAL SECTIONS
CV-T3008	A	PACKAGE 1B - ROADWAY/GRADE SEPARATION - TYPICAL SECTIONS
CV-T3009	A	PACKAGE 1B - ROADWAY/GRADE SEPARATION - TYPICAL SECTIONS
CV-T3010	A	PACKAGE 1B - ROADWAY/GRADE SEPARATION - TYPICAL SECTIONS
CV-T3011	A	PACKAGE 1B - ROADWAY/GRADE SEPARATION - TYPICAL SECTIONS
CV-T3012	A	PACKAGE 1B - ROADWAY/GRADE SEPARATION - TYPICAL SECTIONS
CV-T3013	A	PACKAGE 1B - ROADWAY/GRADE SEPARATION - TYPICAL SECTIONS
ST-K1030	A	PACKAGE 1B - ROADWAY - DRAFT GENERAL PLAN - STANISLAUS ST - SHEET 1 OF 2
ST-K1031	A	PACKAGE 1B - ROADWAY - DRAFT GENERAL PLAN - STANISLAUS ST - SHEET 2 OF 2
~~ST-K1032~~		~~PACKAGE 1B - ROADWAY - DRAFT GENERAL PLAN - TUOLMNE ST - SHEET 1 OF 2~~
~~ST-K1033~~		~~PACKAGE 1B - ROADWAY - DRAFT GENERAL PLAN - TUOLMNE ST - SHEET 2 OF 2~~
ST-K1036	A	PACKAGE 1B - ROADWAY - DRAFT GENERAL PLAN - G ST (VENTURA ST OVERPASS)
~~ST-K1037~~		~~PACKAGE 1B - ROADWAY - DRAFT GENERAL PLAN - VENTURA ST - SHEET 1 OF 2~~
~~ST-K1038~~		~~PACKAGE 1B - ROADWAY - DRAFT GENERAL PLAN - VENTURA ST - SHEET 2 OF 2~~
~~ST-K1039~~		~~PACKAGE 1B - ROADWAY - DRAFT GENERAL PLAN - STANISLAUS ST - PEDESTRIAN BRIDGE~~
~~ST-K1040~~		~~PACKAGE 1B - ROADWAY - DRAFT GENERAL PLAN - VENTURA ST - PEDESTRIAN BRIDGE~~
ST-K1041	A	PACKAGE 1B - ROADWAY - DRAFT GENERAL PLAN - G ST (FRESNO ST OVERPASS)
ST-K1042	A	PACKAGE 1B - ROADWAY - DRAFT GENERAL PLAN - STANISLAUS ST - PEDESTRIAN BRIDGE
ST-K1043	A	PACKAGE 1B - ROADWAY - DRAFT GENERAL PLAN - STANISLAUS ST - PEDESTRIAN BRIDGE
ST-K1044	A	PACKAGE 1B - ROADWAY - DRAFT GENERAL PLAN - STANISLAUS ST - PEDESTRIAN BRIDGE

ADDENDUM 3 - RFP HSR 11-16

REV	DATE	BY	CHK	APP	DESCRIPTION
A	2012-06	VO	BR	RP	REVISED FOR ADDENDUM 3

DESIGNED BY R. DEASON
DRAWN BY V. ORTEGA
CHECKED BY A. BRUNDAGE
IN CHARGE O. EARLE
DATE 06/12/12

URS | HMM | ARUP
CALIFORNIA HIGH-SPEED TRAIN

CALIFORNIA HIGH-SPEED RAIL AUTHORITY

CALIFORNIA HIGH-SPEED TRAIN PROJECT
SIERRA SUBDIVISION
PACKAGE 1B
GENERAL
INDEX OF DRAWINGS

CONTRACT NO.
DRAWING NO. GE-A0012-A3
SCALE NO SCALE
SHEET NO.

06/29/2012 ADDENDUM 3 - RFP HSR 11-16

ort52801 6/13/2012 10:14:28 AM CAHSRP-r1.tbl CHSR_PDF_half_black.pltG:_Sacramento\URS\235413 CA HSR Fresno Palmdale\16.0 Drawings\N-30% RBNSF Fresno\Sheet Files\General\S1-CV-B-0012.dgn

CIVIL GENERAL NOTES

A. CONTROL SURVEY AND MAPPING:

1. DESIGN WAS PREPARED USING TOPOGRAPHIC MAPPING OBTAINED FOR THE PURPOSE OF PRELIMINARY DESIGN IN ACCORDANCE WITH TECHNICAL MEMORANDUM 1.1.4 "ENGINEERING SURVEY AND MAPPING."

2. NAD 83 (NSRS2007), (1991.35) CALIFORNIA COORDINATE SYSTEM DATUM SHALL BE USED AS HORIZONTAL COORDINATE VALUES.

3. NAVD 88 VERTICAL DATUM SHALL TO BE USED AS VERTICAL DATUM.

4. MAPPING SHALL BE BASED ON CALIFORNIA COORDINATE SYSTEM (CCS 83) IN US CUSTOMARY UNITS.

5. NETWORK OF CONTROL SURVEY MONUMENTS WAS ESTABLISHED AT TWO MILE INTERVALS ALONG THE CHSTP ALIGNMENT. THESE CONTROL MONUMENTS SHALL BE USED IN FUTURE SURVEYS TO ENSURE THAT SURVEY ACTIVITIES ARE BASED ON THE SAME ADJUSTMENT POSITIONS AND EPOCH THAT TRANSITIONS BETWEEN ZONES OF THE CALIFORNIA COORDINATE SYSTEM ARE UNIFORM AND CORRECT.

B. GENERAL SITE NOTES

1. CONTRACTOR SHALL FIELD VERIFY ALL EXISTING SITE CONDITIONS PRIOR TO THE COMMENCEMENT OF WORK AND REPORT ANY DISCREPANCIES TO THE OWNER'S REPRESENTATIVE. CONTRACTOR IS RESPONSIBLE FOR VISITING THE SITE AND BECOMING FAMILIAR WITH THE SITE CONDITIONS PRIOR TO BIDDING.

2. ALL CONSTRUCTION ACTIVITIES SHALL BE COORDINATED WITH LOCAL AND STATE JURISDICTION INSPECTOR(S). CONTRACTOR SHALL NOTIFY LOCAL AND STATE JURISDICTION INSPECTOR(S) _____ DAYS PRIOR TO THE START OF ANY CONSTRUCTION.

3. ALL DAMAGE CAUSED BY THE CONTRACTOR AND/OR SUB-CONTRACTOR SHALL BE RESTORED TO AN "AS GOOD OR BETTER" CONDITION.

4. UPON COMPLETION, THE CONTRACTOR SHALL LEAVE THE PROJECT AREA FREE OF DEBRIS AND UNUSED MATERIAL.

5. FOR STANDARD GENERAL ABBREVIATIONS, SEE DRAWINGS SD-GE-001 THRU SD-GE-004.

6. FOR STANDARD GENERAL SYMBOLS, SEE DRAWINGS SD-GE-005 THRU SD-GE-007.

7. "ORIGINAL GROUND" SHOWN ON CROSS SECTIONS REFERS TO THE APPROXIMATE EXISTING GROUND LINE AT THE DESIGNATED CENTERLINE, BASELINE, LAYOUT LINE OR SECTION LINE.

8. THE CONTRACTOR SHALL MAINTAIN EXISTING SITE SURVEY CONTROL POINTS AND BENCH MARKS. SURVEY CONTROL POINTS OR BENCH MARKS DAMAGED OR REMOVED BY THE CONTRACTOR SHALL BE RESTORED BY A REGISTERED LAND SURVEYOR.

9. ALL WORK SHALL CONFORM TO ALL LOCAL, STATE AND FEDERAL CODES AND ORDINANCES IN EFFECT. CONTRACTOR SHALL PROVIDE AND MAINTAIN PROPER BARRICADES, RAILINGS, GUARDS, FLAGGING, LIGHTING, OR OTHER DEVICES NECESSARY FOR THE PROTECTION OF LIFE AND PROPERTY.

10. THE CONTRACTOR SHALL VERIFY ALL CONTROLLING FIELD DIMENSIONS BEFORE ORDERING OR FABRICATING MATERIALS.

11. ALL HORIZONTAL AND VERTICAL DISTANCES ARE IN FEET AND /OR DECIMALS OF FOOT EXCEPT AS NOTED OTHERWISE.

12. ACCESS ROAD TYPE SHALL BE CONFIRMED ON A SITE-BY-SITE BASIS.

C. DEMOLITION NOTES

1. CONTRACTOR MUST REVIEW ALL ENVIRONMENTAL STUDIES AND REQUIREMENTS PRIOR TO BIDDING.

2. CONTRACTOR IS RESPONSIBLE FOR MAINTAINING TEMPORARY ACCESS DURING CONSTRUCTION. UTILITY OUTAGE AND ACCESS CLOSURES DURING CONSTRUCTION REQUIRE A MINIMUM OF _____ DAYS NOTICE TO OWNER OR SITE TENANTS.

3. CONTRACTOR SHALL FOLLOW LOCAL JURISDICTION REQUIREMENTS FOR CLEARING AND GRUBBING.

D. GRADING

1. NO CONTRACTOR SHALL PERFORM ANY GRADING OPERATION SO AS TO CAUSE FALLING ROCKS, SOIL OR DEBRIS IN ANY FORM TO FALL, SLIDE OR FLOW ONTO ADJOINING PROPERTIES, STREETS OR NATURAL WATERCOURSES. SHOULD SUCH VIOLATION OCCUR THE CONTRACTOR MAY BE CITED AND THE CONTRACTOR SHALL IMMEDIATELY MAKE ALL REMEDIAL ACTIONS NECESSARY.

2. THE CONTRACTOR SHALL KEEP THE PROJECT AREA AND SURROUNDING AREA FREE FROM DUST NUISANCE.

3. PROVISIONS SHALL BE MADE TO PREVENT SURFACE WATERS FROM DAMAGING THE CUT FACE OF AN EXCAVATION OR THE SLOPED SURFACES OF A FILL. FURTHERMORE, PROVISIONS SHALL BE MADE TO PREVENT SEDIMENT-LADEN RUNOFF FROM LEAVING THE SITE.

4. ALL SLOPED AND EXPOSED AREAS SHALL BE SODDED OR PLANTED AS SOON AS FINAL GRADES HAVE BEEN ESTABLISHED. PLANTING SHALL NOT BE DELAYED UNTIL ALL GRADING WORK HAS BEEN COMPLETED. GRADING TO FINAL GRADE SHALL BE CONTINUOUS, AND ANY AREA WITHIN WHICH WORK HAS BEEN INTERRUPTED OR DELAYED SHALL BE PLANTED.

5. THE LIMITS OF THE AREA TO BE GRADED SHALL BE FLAGGED BEFORE THE COMMENCEMENT OF THE GRADING WORK.

6. ALL GRADING OPERATIONS SHALL BE PERFORMED IN CONFORMANCE WITH THE APPLICABLE PROVISIONS OF THE WATER POLLUTION CONTROL AND WATER QUALITY STANDARDS CONTAINED IN THE LATEST CALTRANS STORM WATER QUALITY HANDBOOKS.

E. TEMPORARY TRAFFIC CONTROL

1. CONTRACTOR SHALL APPLY OBTAIN APPROVAL FOR TRAFFIC CONTROL PLAN FROM AGENCY HAVING JURISDICTION OVER THE ROADWAY PRIOR TO IMPLEMENTATION OF TEMPORARY TRAFFIC CONTROL.

F. PUBLIC HEATH, SAFETY, AND CONVENIENCE NOTES

1. CONTRACTOR SHALL OBSERVE AND COMPLY WITH ALL FEDERAL, STATE, AND LOCAL LAWS REQUIRED FOR THE PROTECTION OF PUBLIC HEALTH, SAFETY, AND ENVIRONMENTAL QUALITY.

2. CONTRACTOR SHALL APPLY FOR A CONSTRUCTION PERMIT WITH A NOISE POLLUTION CONTROL PLAN.

G. STOCKPILING NOTES

1. IF THE STOCKPILING WORK INVOLVES CONTAMINATED SOIL, THEN ALL STOCKPILING WORK SHALL BE DONE IN CONFORMANCE WITH APPLICABLE STATE AND FEDERAL REQUIREMENTS.

H. GRUBBING AND CLEARING NOTES

1. WHERE APPLICABLE AND FEASIBLE THE MEASURES TO CONTROL EROSION AND OTHER POLLUTANTS SHALL BE IN PLACE BEFORE ANY GRUBBING WORK IS INITIATED.

I. ADDITIONAL INFORMATION

1. THE FOLLOWING TABLES PROVIDE INFORMATION ON THE DESIGN SPEED OF CITY OF FRESNO ROADWAYS WITHIN THE LIMITS OF WORK:

DESIGN SPEED TABLE

STREET NAME	ALIGNMENT DESIGNATION	DESIGN SPEED (MPH)
STANISLAUS ST	STN	30
TUOLUMNE ST	TUO	30
TULARE ST (HST UNDERPASS)	TU1	30
TULARE ST (HST OVERPASS)	TU2	25
VENTURA ST	VEN	25
F ST (STANISLAUS ST)	FS	30
F ST (VENTURA ST)	FS	35
G ST (VENTURA ST)	GS	40
H ST (VENTURA ST)	HS	35
FRESNO ST (HST OVERPASS)	FFS	35
G ST (FRESNO ST)	GS2	40

A

ADDENDUM 3 - RFP HSR 11-16

REV	DATE	BY	CHK	APP	DESCRIPTION
A	2012-06	VO	BR	RP	REVISED FOR ADDENDUM 3

DESIGNED BY I. JOSIFEK
DRAWN BY V. ORTEGA
CHECKED BY B. RAWSON
IN CHARGE O. EARLE
DATE 06/12/12

URS | HMM | ARUP
CALIFORNIA HIGH-SPEED TRAIN

CALIFORNIA HIGH-SPEED RAIL AUTHORITY

CALIFORNIA HIGH-SPEED TRAIN PROJECT
SIERRA SUBDIVISION
PACKAGE 1B
ROADWAY
GENERAL NOTES

CONTRACT NO.
DRAWING NO. CV-B0005-A3
SCALE AS SHOWN
SHEET NO.

JOS53823 6/13/2012 8:56:39 AM CAHSRP-r1.tbl CHSR_PDF_half_black.pltG:_Sacramento\URS\235413 CA HSR Fresno Palmdale\16.0 Drawings\N-30% RBNSF Fresno\Sheet Files\General\X-GE-ANNO-GENERAL-NOTES.dgn

06/29/2012 ADDENDUM 3 - RFP HSR 11-16

GENERAL NOTES
LOAD AND RESISTANCE FACTOR DESIGN

DESIGN:	HIGH SPEED RAIL DESIGN CRITERIA, AASHTO LRFD BRIDGE DESIGN SPECIFICATIONS 4th EDITION AND CALTRANS AMENDMENTS
STANDARD SPECIFICATIONS:	HIGH SPEED RAIL SPECIFICATIONS, CALTRANS STANDARD SPECIFICATIONS DATED MAY 2006
SEISMIC DESIGN:	HIGH SPEED RAIL DESIGN CRITERIA, CALTRANS SEISMIC DESIGN CRITERIA (SDC) VERSION 1.6, NOVEMBER 2010
DEAD LOAD:	INCLUDES 35 PSF FOR FUTURE WEARING SURFACE
LIVE LOADING:	HL93 AND PERMIT DESIGN LOAD
WIND LOAD:	100 MPH WIND VELOCITY
REINFORCED CONCRETE:	fy = 60 ksi f'c = SEE CONCRETE STRENGTH AND TYPE LIMITS
PRESTRESSED CONCRETE:	LOW RELAXATION STRANDS fpy = 243 ksi fpu = 270 ksi f'ci = 5 ksi AT TIME OF RELEASE f'c = 7 ksi AT 28 DAYS
~~PILES:~~	~~CLASS 200 PILES~~ ~~B2-8~~ ~~CLASS 140 PILES~~ ~~CLASS 90 PILES~~ ~~B2-5~~

A

THE ARS CURVES SHOWN BELOW ARE FOR PRELIMINARY DESIGN. REVISED ARS CURVES WILL BE PROVIDED FOR DETAILED DESIGN. A

ARS: MCE (5%)

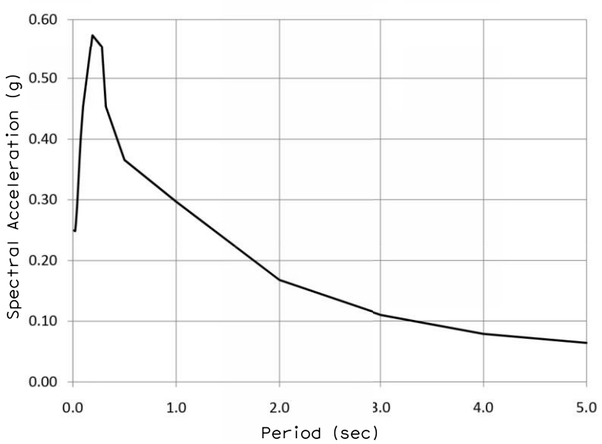

ARS: OBE (5%)

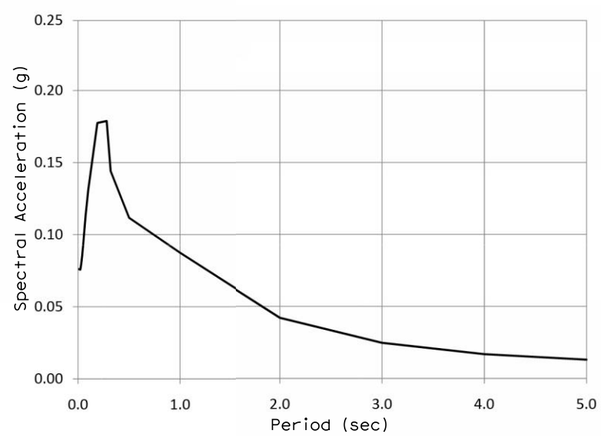

GENERAL STRUCTURAL NOTES

1. PILE/SHAFT LENGTHS TO BE DETERMINED
2. EMBEDDED ITEMS REQUIRED FOR UTILITY INSTALLATIONS ARE NOT SHOWN ON THE STRUCTURAL DRAWINGS. CONTRACTOR SHALL REFER TO THE UTILITY DRAWINGS FOR THE LOCATIONS AND DETAILS OF THESE ITEMS.
3. MSE WALL REINFORCEMENT AND PANEL TO BE DETERMINED
4. ALL STRUCTURAL DRAWINGS SHALL BE READ IN CONJUNCTION WITH THE SPECIFICATIONS AND OTHER DRAWINGS RELATED TO THE WORK.
5. ALL SPANS ARE DESIGNED CONTINUOUS FOR LIVE LOAD.

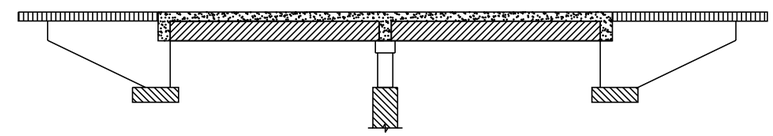

- STRUCTURAL CONCRETE, BRIDGE
  f'c = 5 ksi AT 28 DAYS
- STRUCTURAL CONCRETE, APPROACH SLAB
  f'c = 4 ksi AT 28 DAYS
- STRUCTURAL CONCRETE, SUPERSTRUCTURE
  f'c = 5 ksi AT 28 DAYS
- STRUCTURAL CONCRETE, BRIDGE FOOTING
  f'c = 4 ksi AT 28 DAYS
- PRECAST PRESTRESSED GIRDER
  f'c = SEE PRESTRESSED CONCRETE

CONCRETE STRENGTH AND TYPE LIMITS

NO SCALE

ADDENDUM 3 - RFP HSR 11-16

REV	DATE	BY	CHK	APP	DESCRIPTION
A	2012-06	VO	BR	RP	REVISED FOR ADDENDUM 3

DESIGNED BY M. BURGARD
DRAWN BY D. BARNHART
CHECKED BY L. SMITH
IN CHARGE Y. BERI
DATE 06/12/12

PROPOSED PRELIMINARY DESIGN

NOT FOR CONSTRUCTION

URS | HMM | ARUP
CALIFORNIA HIGH-SPEED TRAIN

CALIFORNIA HIGH-SPEED RAIL AUTHORITY

CALIFORNIA HIGH-SPEED TRAIN PROJECT
SIERRA SUBDIVISION
PACKAGE 1B
ROADWAY
GENERAL STRUCTURAL NOTES

CONTRACT NO.
DRAWING NO. CV-B0006-A3
SCALE AS SHOWN
SHEET NO.

CHSR_PDF_half_black.pltG:_Sacramento\URS\235413 CA HSR Fresno Palmdale\16.0 Drawings\N-30% RBNSF Fresno\Sheet Files\Structures\S1-ST-I0001-GNT-B-A3.dgn
6/12/2012 2:57:04 PM
or152801
06/29/2012 ADDENDUM 3 - RFP HSR 11-16

LOCATION NO.	SHEET TITLE	ROADWAY DWG NO.	STRUCTURE DWG NO.
5	GRADE SEPARATION - STANISLAUS ST	CV-T1013 - CV-T1014	ST-K1030 - ST-K1031
6	GRADE SEPARATION - FRESNO ST	CV-T1024 - CV-T1026	ST-K1041
7	GRADE SEPARATION - TULARE ST	CV-T1018 - CV-T1020	-
8	GRADE SEPARATION - VENTURA ST	CV-T1021 - CV-T1022	-
28	LOCAL ROAD - G ST	CV-T1018	ST-K1036
29	LOCAL ROAD - BROADWAY ST	CV-T1013	-
30	LOCAL ROAD - F ST	CV-T1013 & CV-T1023	-
45	ROAD CLOSURE - F ST (TULARE ST OH)	TO BE DONE BY OTHERS	-
46	ROAD CLOSURE - KERN ST	CV-T1016 & CV-T1018	-
47	ROAD CLOSURE - MONO ST	CV-T1021	-
48	ROAD CLOSURE - TUOLUMNE ST	CV-T1013 & CV-T1015	-

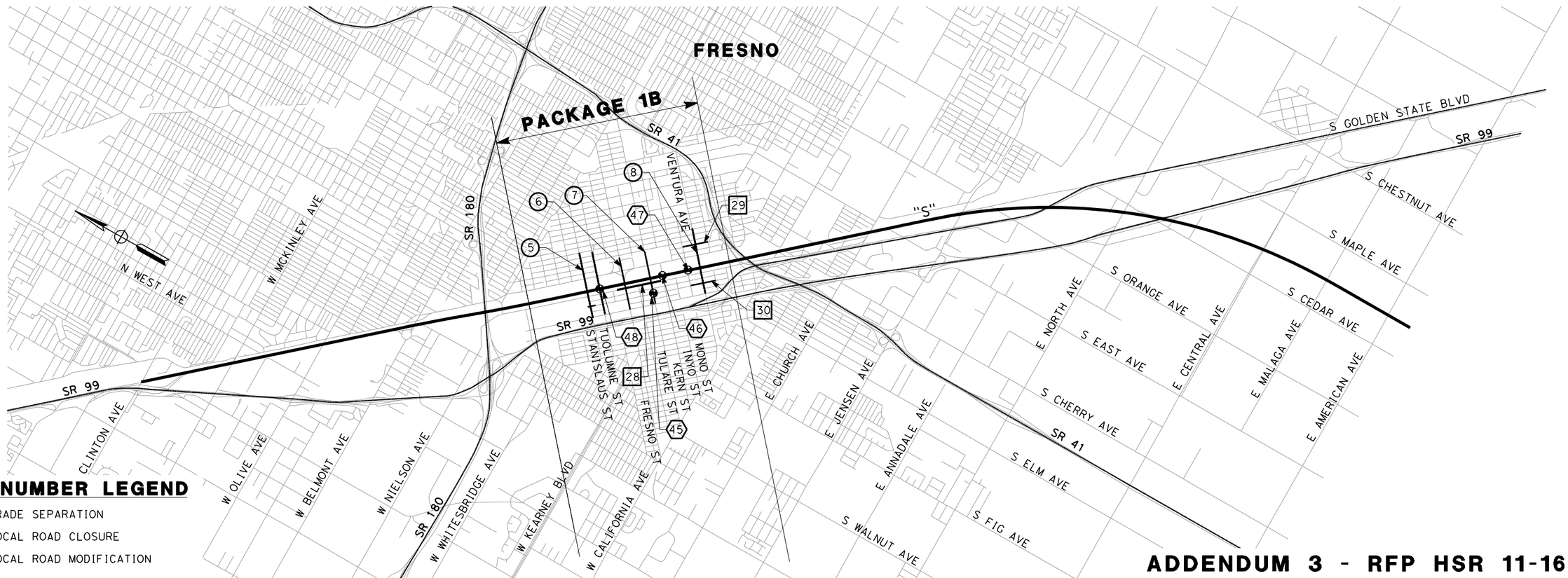

LOCATION NUMBER LEGEND

- (#) - INDICATES GRADE SEPARATION
- (#) - INDICATES LOCAL ROAD CLOSURE
- [#] - INDICATES LOCAL ROAD MODIFICATION

ADDENDUM 3 - RFP HSR 11-16

REV	DATE	BY	CHK	APP	DESCRIPTION
A	2012-06	VO	BR	RP	REVISED FOR ADDENDUM 3

DESIGNED BY I. JOSIFEK
DRAWN BY V. ORTEGA
CHECKED BY B. RAWSON
IN CHARGE O. EARLE
DATE 06/12/12

URS | HMM | ARUP
CALIFORNIA HIGH-SPEED TRAIN

CALIFORNIA HIGH-SPEED RAIL AUTHORITY

CALIFORNIA HIGH-SPEED TRAIN PROJECT
SIERRA SUBDIVISION
PACKAGE 1B
ROADWAY
INDEX MAP

CONTRACT NO.
DRAWING NO. CV-B0007-A3
SCALE NO SCALE
SHEET NO.

NET53329 6/13/2012 10:32:30 AM CAHSRP-r1.tbl CHSR_PDF_half_black.pltG:_Sacramento\URS\235413 CA HSR Fresno Palmdale\16.0 Drawings\N-30% RBNSF Fresno\Sheet Files\Civil\Package 1B\S1-CV-B0007-A3.dgn

06/29/2012 ADDENDUM 3 - RFP HSR 11-16

RETAINING WALL DATA

NO.	LOCATIONS BEGIN	LOCATIONS END	LENGTH	AVG HEIGHT
1	28.00′ LT "STN" 16+22.52	28.00′ LT "STN" 20+01.08	379′	15′
2	28.00′ RT "STN" 16+91.14	28.00′ RT "STN" 20+01.08	310′	15′
3	28.00′ LT "STN" 27+96.08	28.00′ LT "STN" 30+78.65	283′	10′
4	28.00′ RT "STN" 27+96.08	28.00′ RT "STN" 30+77.33	281′	10′

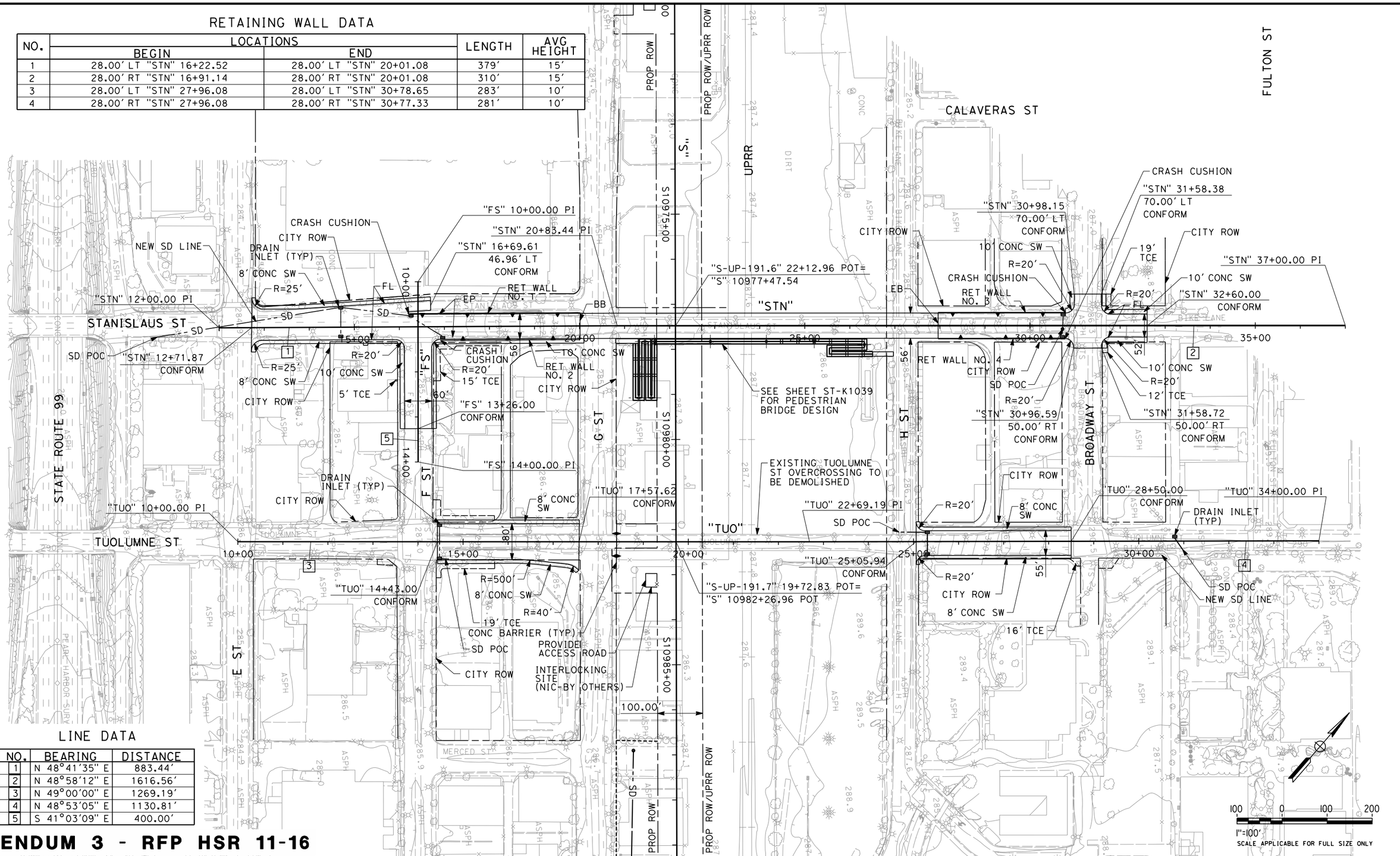

LINE DATA

NO.	BEARING	DISTANCE
1	N 48°41′35″ E	883.44′
2	N 48°58′12″ E	1616.56′
3	N 49°00′00″ E	1269.19′
4	N 48°53′05″ E	1130.81′
5	S 41°03′09″ E	400.00′

ADDENDUM 3 - RFP HSR 11-16

REV	DATE	BY	CHK	APP	DESCRIPTION
A	2012-06	VO	BR	RP	REVISED FOR ADDENDUM 3

DESIGNED BY J. NETTLETON
DRAWN BY V. ORTEGA
CHECKED BY B. RAWSON
IN CHARGE O. EARLE
DATE 06/12/12

PROPOSED PRELIMINARY DESIGN

NOT FOR CONSTRUCTION

URS | HMM | ARUP
CALIFORNIA HIGH-SPEED TRAIN

CALIFORNIA HIGH-SPEED RAIL AUTHORITY

CALIFORNIA HIGH-SPEED TRAIN PROJECT
SIERRA SUBDIVISION
PACKAGE 1B
ROADWAY
GRADE SEPARATION LAYOUT
STANISLAUS ST AND TUOLUMNE ST

CONTRACT NO.
DRAWING NO. CV-T1013-A3
SCALE AS SHOWN
SHEET NO.

06/29/2012 ADDENDUM 3 - RFP HSR 11-16

6/12/2012 2:22:59 PM CAHSRP-r1.tbl CHSR_PDF_half_black.pltG:_Sacramento\URS\235413 CA HSR Fresno Palmdale\16.0 Drawings\N-30% RBNSF Fresno\Sheet Files\Civil\Package 1B\S1-CV-T1013-A3.dgn
ort52801

NOTES:

1. FOR BRIDGE INFORMATION, SEE STRUCTURAL PLANS.

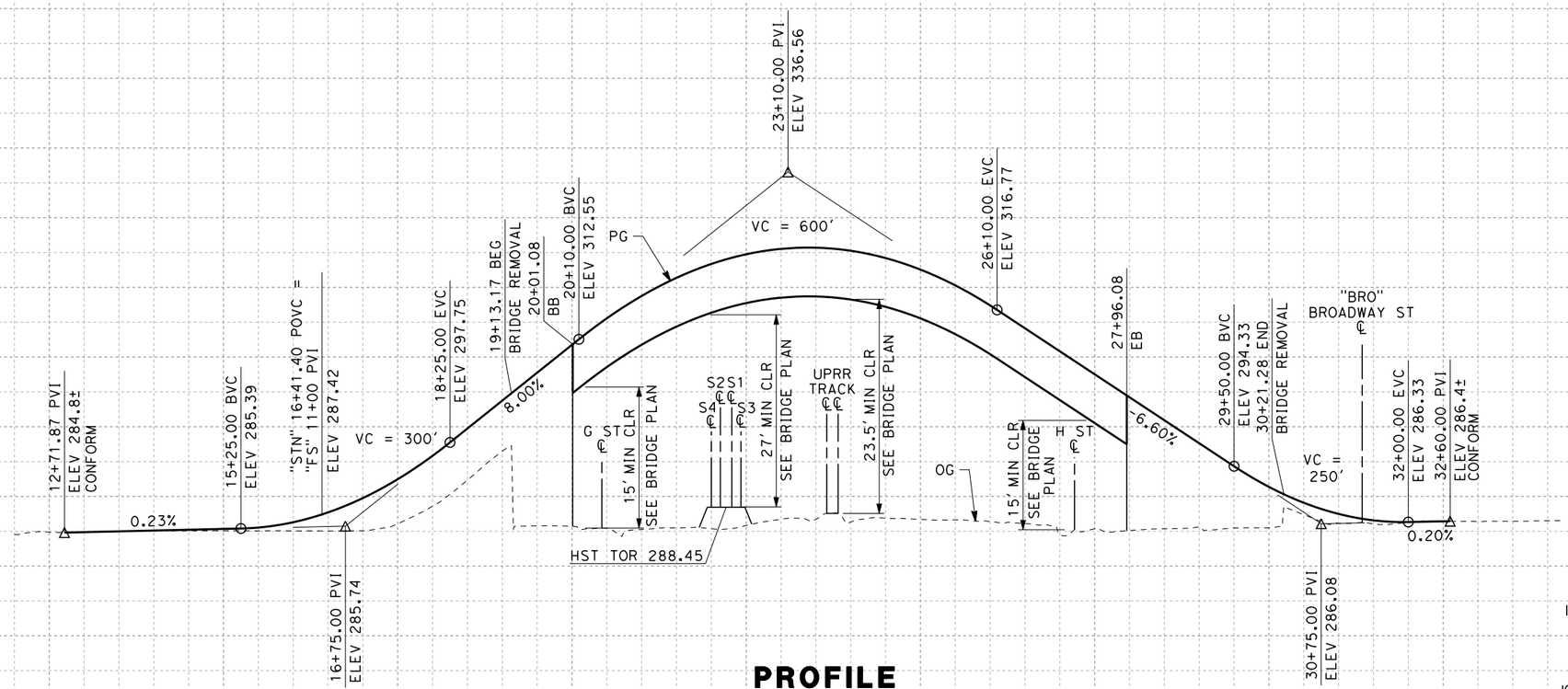

PROFILE

"STN" LINE

ADDENDUM 3 - RFP HSR 11-16

REV	DATE	BY	CHK	APP	DESCRIPTION
A	2012-06	VO	BR	RP	REVISED FOR ADDENDUM 3

DESIGNED BY J. NETTLETON
DRAWN BY V. ORTEGA
CHECKED BY B. RAWSON
IN CHARGE Q. EARLE
DATE 06/12/12

PROPOSED PRELIMINARY DESIGN

NOT FOR CONSTRUCTION

URS | HMM | ARUP
CALIFORNIA HIGH-SPEED TRAIN

CALIFORNIA HIGH-SPEED RAIL AUTHORITY

CALIFORNIA HIGH-SPEED TRAIN PROJECT
SIERRA SUBDIVISION
PACKAGE 1B
ROADWAY
GRADE SEPARATION PROFILE
STANISLAUS ST

CONTRACT NO.
DRAWING NO. CV-T1014-A3
SCALE AS SHOWN
SHEET NO.

06/29/2012 ADDENDUM 3 - RFP HSR 11-16

6/12/2012 2:23:22 PM CAHSRP-r1.tbl CHSR_PDF_half_black.pltG:_Sacramento\URS\235413 CA HSR Fresno Palmdale\16.0 Drawings\N-30% RBNSF Fresno\Sheet Files\Civil\Package 1B\S1-CV-T1014-A3.dgn
ort52801

NOTES:

1. FOR BRIDGE INFORMATION, SEE STRUCTURAL PLANS.

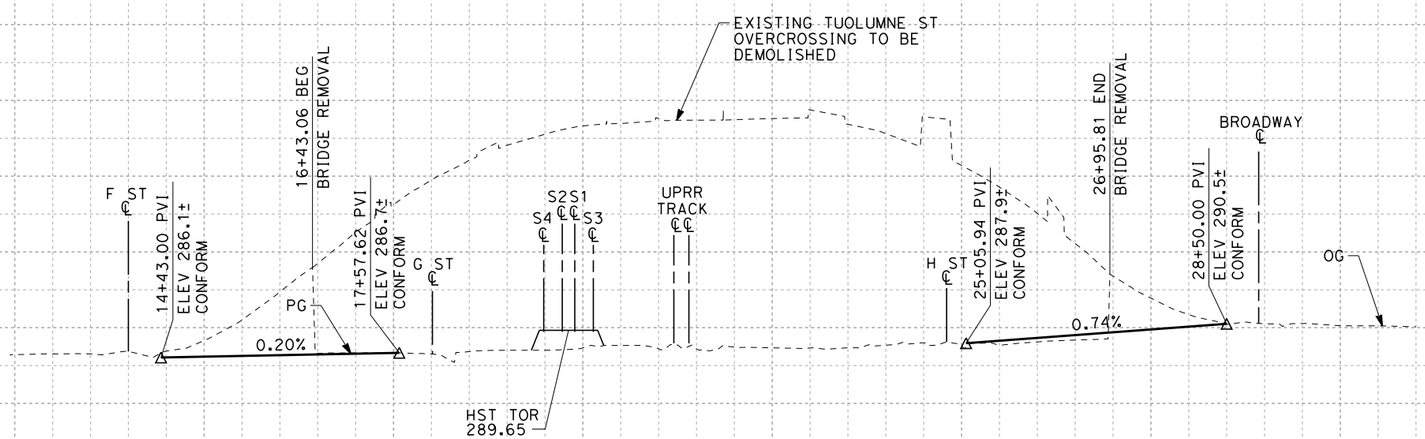

PROFILE
"TUO" LINE

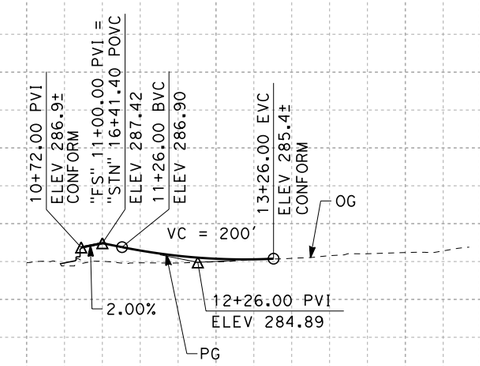

PROFILE
"FS" LINE (STANISLAUS ST)

1"=10' VERT
SCALE APPLICABLE FOR FULL SIZE ONLY

1"=100' HORIZ
SCALE APPLICABLE FOR FULL SIZE ONLY

ADDENDUM 3 - RFP HSR 11-16

REV	DATE	BY	CHK	APP	DESCRIPTION
A	2012-06	VO	BR	RP	REVISED FOR ADDENDUM 3

DESIGNED BY J. NETTLETON
DRAWN BY V. ORTEGA
CHECKED BY B. RAWSON
IN CHARGE Q. EARLE
DATE 06/12/12

PROPOSED PRELIMINARY DESIGN

NOT FOR CONSTRUCTION

URS | HMM | ARUP
CALIFORNIA HIGH-SPEED TRAIN

CALIFORNIA HIGH-SPEED RAIL AUTHORITY

CALIFORNIA HIGH-SPEED TRAIN PROJECT
SIERRA SUBDIVISION
PACKAGE 1B
ROADWAY
GRADE SEPARATION PROFILE
TUOLUMNE ST/F ST AT STANISLAUS ST

CONTRACT NO.
DRAWING NO. CV-T1015-A3
SCALE AS SHOWN
SHEET NO.

06/29/2012 ADDENDUM 3 - RFP HSR 11-16

or152801 6/12/2012 2:23:49 PM CAHSRP-r1.tbl CHSR_PDF_half_black.pltG:_Sacramento\URS\235413 CA HSR Fresno Palmdale\16.0 Drawings\N-30% RBNSF Fresno\Sheet Files\Civil\Package 1B\S1-CV-T1015-A3.dgn

CURVE DATA

NO.	R	Δ	T	L
1	5000.00′	02°34′01"	112.02′	224.01′
2	2000.00′	05°55′10"	103.41′	206.63′
3	3000.00′	03°23′12"	88.69′	177.33′

LINE DATA

NO.	BEARING	DISTANCE
1	N 49°02′28" E	550.72′
2	N 51°36′29" E	312.56′
3	N 45°41′19" E	197.09′
4	N 49°04′31" E	587.01′
5	S 40°58′08" E	587.01′

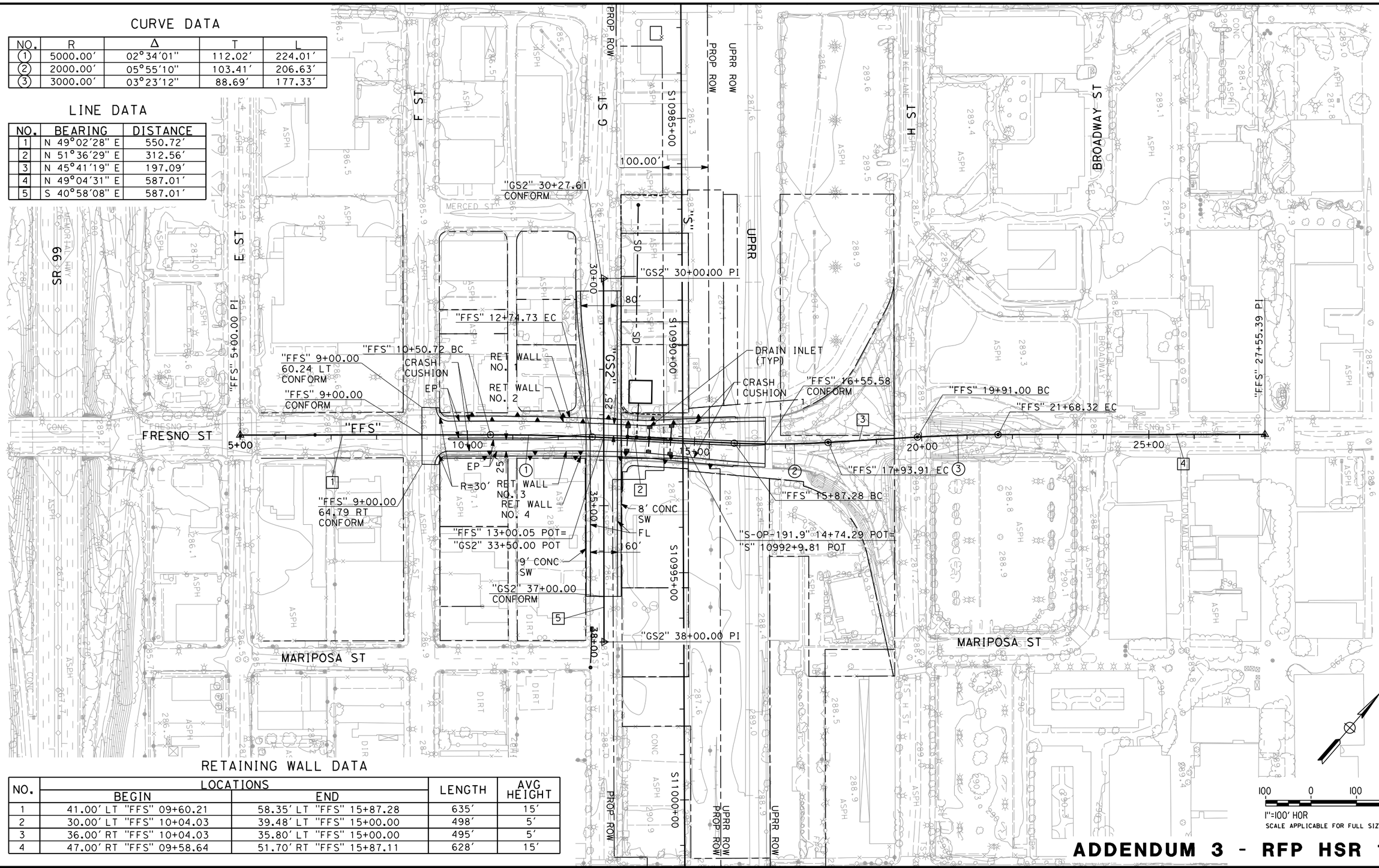

RETAINING WALL DATA

NO.	LOCATIONS		LENGTH	AVG HEIGHT
	BEGIN	END		
1	41.00′ LT "FFS" 09+60.21	58.35′ LT "FFS" 15+87.28	635′	15′
2	30.00′ LT "FFS" 10+04.03	39.48′ LT "FFS" 15+00.00	498′	5′
3	36.00′ RT "FFS" 10+04.03	35.80′ LT "FFS" 15+00.00	495′	5′
4	47.00′ RT "FFS" 09+58.64	51.70′ RT "FFS" 15+87.11	628′	15′

ADDENDUM 3 - RFP HSR 11-16

06/29/2012 ADDENDUM 3 - RFP HSR 11-16

REV	DATE	BY	CHK	APP	DESCRIPTION
A	2012-06	ES	MB	RP	REVISED FOR ADDENDUM 3

DESIGNED BY J. MONG
DRAWN BY E. SUDHAUSEN
CHECKED BY S. BURGES
IN CHARGE R. COFFIN
DATE 06/12/12

PROPOSED PRELIMINARY DESIGN

NOT FOR CONSTRUCTION

URS | HMM | ARUP
CALIFORNIA HIGH-SPEED TRAIN

CALIFORNIA HIGH-SPEED RAIL AUTHORITY

CALIFORNIA HIGH-SPEED TRAIN PROJECT
SIERRA SUBDIVISION
PACKAGE 1B
ROADWAY
GRADE SEPARATION LAYOUT
FRESNO STREET (HST OVERPASS)

CONTRACT NO.
DRAWING NO. CV-T1024-A3
SCALE AS SHOWN
SHEET NO.

eron.sudhausen6/12/2012 1:41:50 PM CAHSRP-r1.tbl PDF_half_black_200dpi.pthglobal\americas\Jobs\S-F\131000\131577\4 Internal Project Data\4-03 Drawings\4-03-03 30% Design\4-03-03-05 Design Sheets\Highway\

NOTES:

1. FOR BRIDGE INFORMATION, SEE STRUCTURAL PLANS.

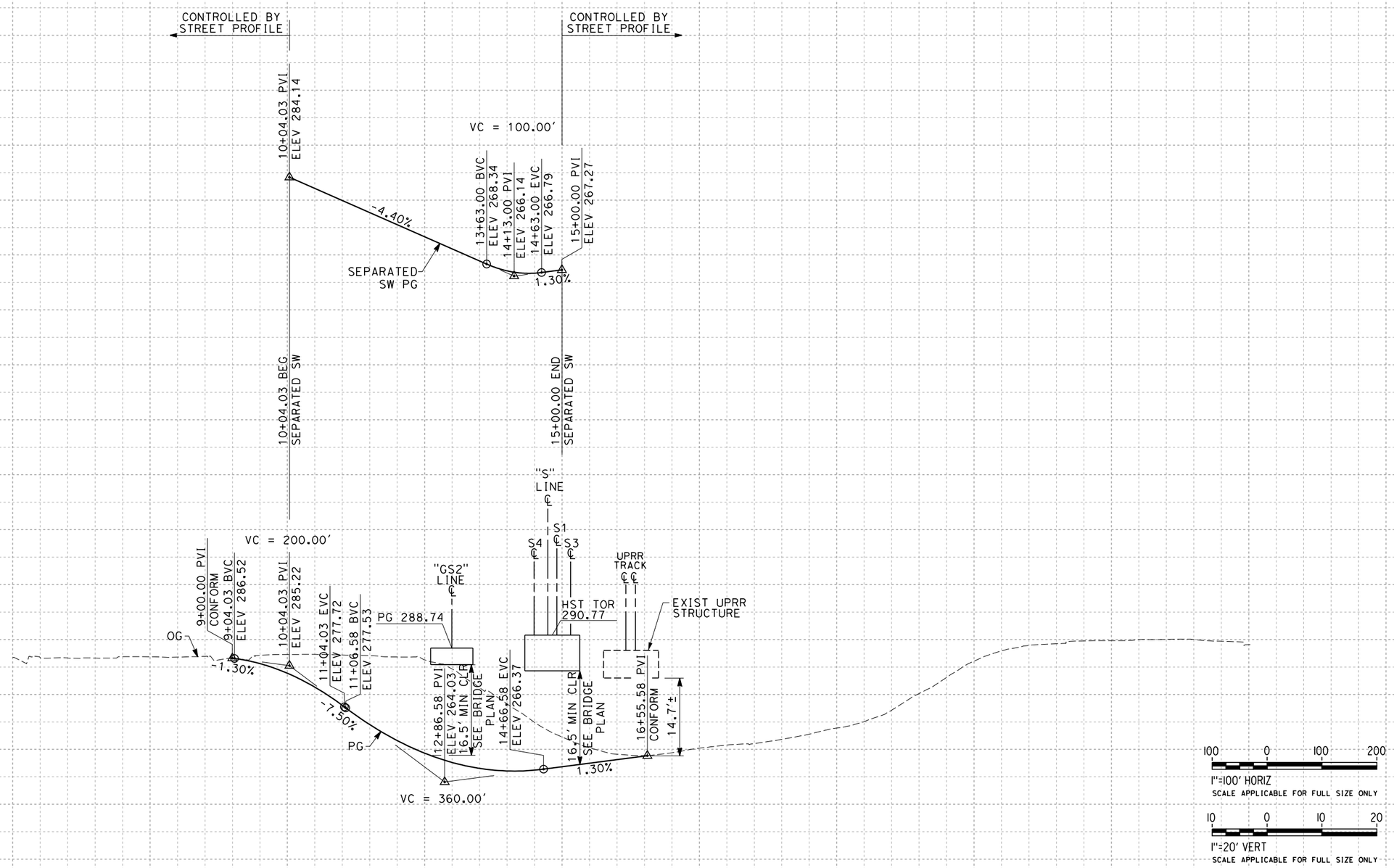

PROFILE
"FFS" LINE

ADDENDUM 3 - RFP HSR 11-16

06/29/2012 ADDENDUM 3 - RFP HSR 11-16

REV	DATE	BY	CHK	APP	DESCRIPTION
A	2012-06	ES	MB	RP	REVISED FOR ADDENDUM 3

DESIGNED BY J. MONG
DRAWN BY E. SUDHAUSEN
CHECKED BY S. BURGES
IN CHARGE R. COFFIN
DATE 06/12/12

PROPOSED PRELIMINARY DESIGN

NOT FOR CONSTRUCTION

URS | HMM | ARUP
CALIFORNIA HIGH-SPEED TRAIN

CALIFORNIA HIGH-SPEED RAIL AUTHORITY

CALIFORNIA HIGH-SPEED TRAIN PROJECT
SIERRA SUBDIVISION
PACKAGE 1B
ROADWAY
GRADE SEPARATION PROFILE
FRESNO STREET (HST OVERPASS)

CONTRACT NO.
DRAWING NO. CV-T1025-A3
SCALE AS SHOWN
SHEET NO.

eron.sudhauser6/12/2012 1:44:44 PM CAHSRP-r1.tbl PDF_half_black_200dpi.pltglobal\americas\Jobs\S-F\131000\131577\4 Internal Project Data\4-03 Drawings\4-03-03 30% Design\4-03-03-05 Design Sheets\Highway\

NOTES:

1. FOR BRIDGE INFORMATION, SEE STRUCTURAL PLANS.

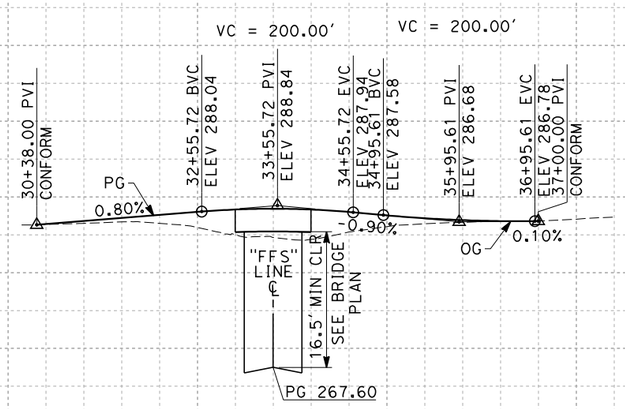

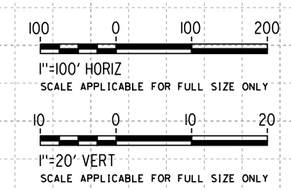

PROFILE
"GS" LINE

ADDENDUM 3 - RFP HSR 11-16

30+00 35+00 40+00

290 280 270 260 320 310 300 290 280 270 260 250 240

REV	DATE	BY	CHK	APP	DESCRIPTION
A	2012-06	ES	MB	RP	REVISED FOR ADDENDUM 3

DESIGNED BY J. MONG
DRAWN BY E. SUDHAUSEN
CHECKED BY S. BURGES
IN CHARGE R. COFFIN
DATE 06/12/12

PROPOSED PRELIMINARY DESIGN

NOT FOR CONSTRUCTION

URS | HMM | ARUP
CALIFORNIA HIGH-SPEED TRAIN

CALIFORNIA HIGH-SPEED RAIL AUTHORITY

CALIFORNIA HIGH-SPEED TRAIN PROJECT
SIERRA SUBDIVISION
PACKAGE 1B
ROADWAY
GRADE SEPARATION PROFILE
G STREET AT FRESNO STREET

CONTRACT NO.
DRAWING NO. CV-T1026-A3
SCALE AS SHOWN
SHEET NO.

eron.sudhauser6/12/2012 1:48:53 PM CAHSRP-r1.tbl PDF_half_black_200dpi.pltglobal\americas\Jobs\S-F\131000\131577\4 Internal Project Data\4-03 Drawings\4-03-03 30% Design\4-03-03-05 Design Sheets\Highway\
06/29/2012 ADDENDUM 3 - RFP HSR 11-16

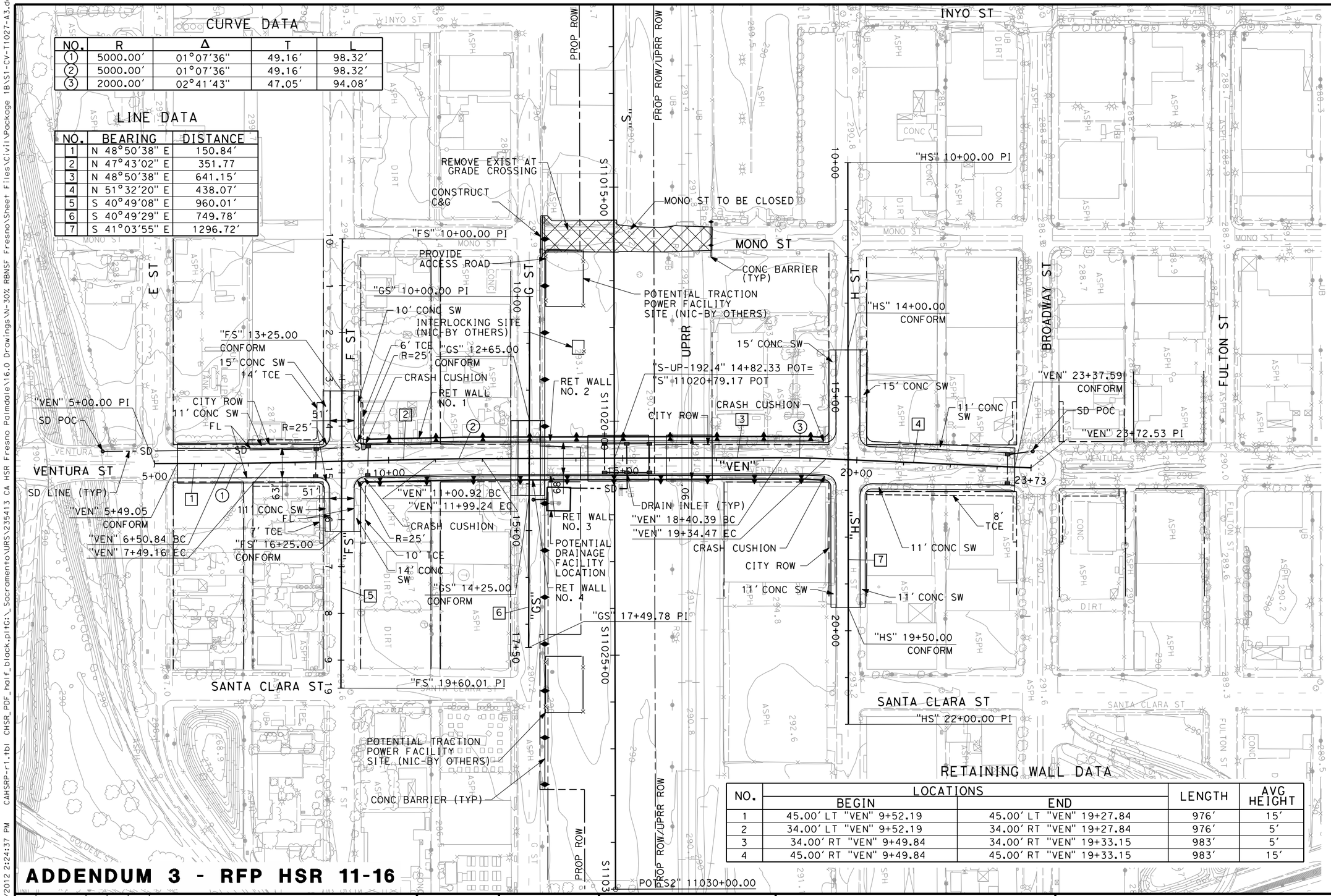

CURVE DATA

NO.	R	Δ	T	L
1	5000.00′	01°07′36"	49.16′	98.32′
2	5000.00′	01°07′36"	49.16′	98.32′
3	2000.00′	02°41′43"	47.05′	94.08′

LINE DATA

NO.	BEARING	DISTANCE
1	N 48°50′38" E	150.84′
2	N 47°43′02" E	351.77
3	N 48°50′38" E	641.15′
4	N 51°32′20" E	438.07′
5	S 40°49′08" E	960.01′
6	S 40°49′29" E	749.78′
7	S 41°03′55" E	1296.72′

RETAINING WALL DATA

NO.	LOCATIONS		LENGTH	AVG HEIGHT
	BEGIN	END		
1	45.00′ LT "VEN" 9+52.19	45.00′ LT "VEN" 19+27.84	976′	15′
2	34.00′ LT "VEN" 9+52.19	34.00′ RT "VEN" 19+27.84	976′	5′
3	34.00′ RT "VEN" 9+49.84	34.00′ RT "VEN" 19+33.15	983′	5′
4	45.00′ RT "VEN" 9+49.84	45.00′ RT "VEN" 19+33.15	983′	15′

100 0 100 200
1"=100′
SCALE APPLICABLE FOR FULL SIZE ONLY

ADDENDUM 3 - RFP HSR 11-16

06/29/2012 ADDENDUM 3 - RFP HSR 11-16

REV	DATE	BY	CHK	APP	DESCRIPTION
A	2012-06	VO	BR	RP	REVISED FOR ADDENDUM 3

DESIGNED BY J. NETTLETON
DRAWN BY V. ORTEGA
CHECKED BY B. RAWSON
IN CHARGE O. EARLE
DATE 06/12/12

PROPOSED PRELIMINARY DESIGN

NOT FOR CONSTRUCTION

URS | HMM | ARUP
CALIFORNIA HIGH-SPEED TRAIN

CALIFORNIA HIGH-SPEED RAIL AUTHORITY

CALIFORNIA HIGH-SPEED TRAIN PROJECT
SIERRA SUBDIVISION
PACKAGE 1B
ROADWAY
GRADE SEPARATION LAYOUT
VENTURA ST

CONTRACT NO.
DRAWING NO. CV-T1027-A3
SCALE AS SHOWN
SHEET NO.

6/12/2012 2:24:37 PM CAHSRP-r1.tbl CHSR_PDF_half_black.pltG:_Sacramento\URS\235413 CA HSR Fresno\Sheet Files\Civil\Package 1B\S1-CV-T1027-A3.dgn
or152801
CHSR Fresno Palmdale\16.0 Drawings\N-30% RBNSF Fresno

NOTES:

1. FOR BRIDGE INFORMATION, SEE STRUCTURAL PLANS.

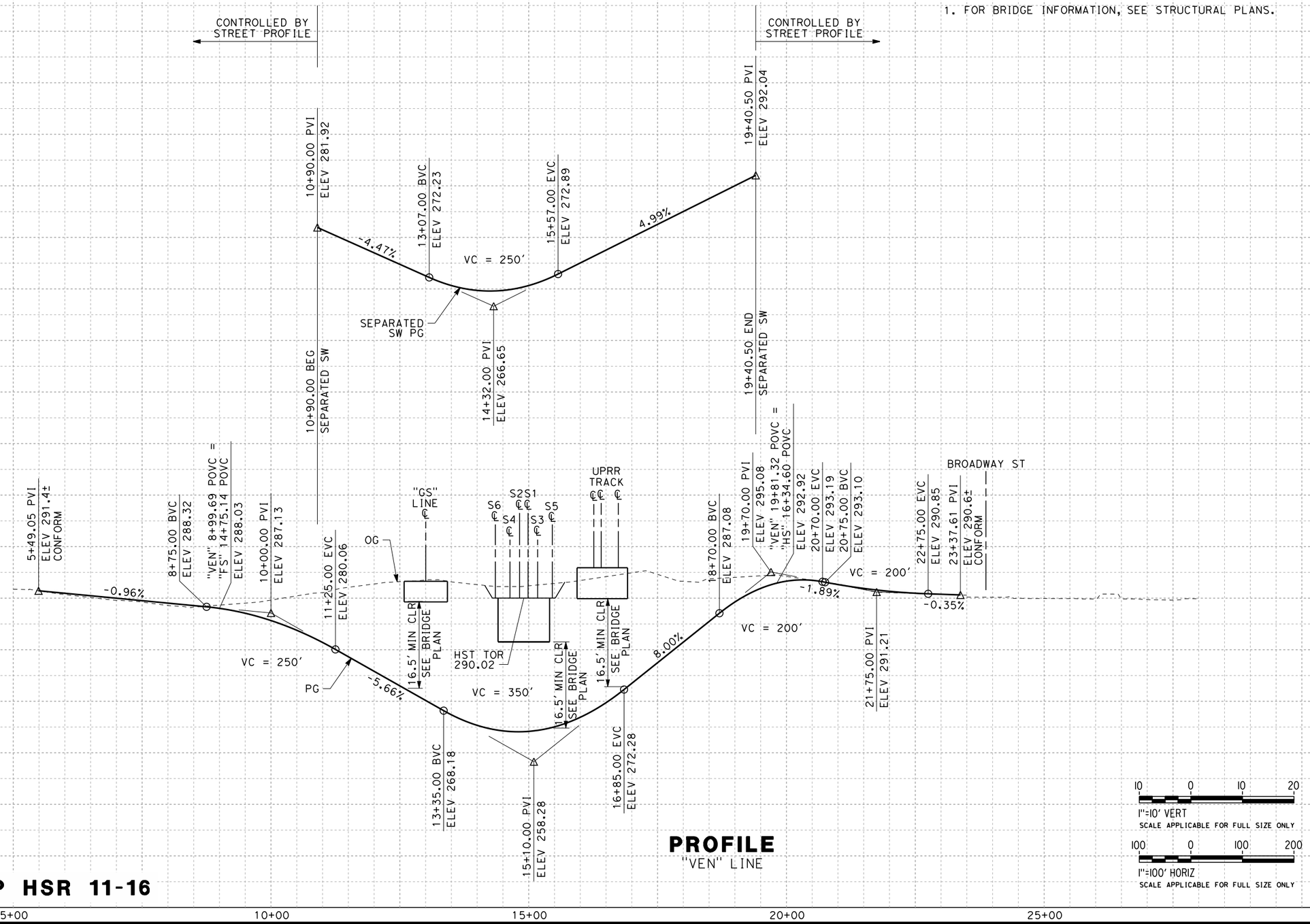

PROFILE
"VEN" LINE

ADDENDUM 3 - RFP HSR 11-16

06/29/2012 ADDENDUM 3 - RFP HSR 11-16

REV	DATE	BY	CHK	APP	DESCRIPTION
A	2012-06	VO	BR	RP	REVISED FOR ADDENDUM 3

DESIGNED BY J. NETTLETON
DRAWN BY V. ORTEGA
CHECKED BY B. RAWSON
IN CHARGE O. EARLE
DATE 06/12/12

PROPOSED PRELIMINARY DESIGN

NOT FOR CONSTRUCTION

URS | HMM | ARUP
CALIFORNIA HIGH-SPEED TRAIN

CALIFORNIA HIGH-SPEED RAIL AUTHORITY

CALIFORNIA HIGH-SPEED TRAIN PROJECT
SIERRA SUBDIVISION
PACKAGE 1B
ROADWAY
GRADE SEPARATION PROFILE
VENTURA ST

CONTRACT NO.
DRAWING NO. CV-T1028-A3
SCALE AS SHOWN
SHEET NO.

or152801 6/12/2012 2:24:58 PM CAHSRP-r1.tbl CHSR_PDF_half_black.pltG:_Sacramento\URS\235413 CA HSR Fresno Palmdale\16.0 Drawings\N-30% RBNSF Fresno\Sheet Files\Civil\Package 1B\S1-CV-T1028-A3.dgn

ort52801 6/12/2012 2:25:17 PM CAHSRP-r1.tbl CHSR_PDF_half_black.pltG:_Sacramento\URS\235413 CA HSR Fresno Palmdale\16.0 Drawings\N-30% RBNSF Fresno\Sheet Files\Civil\Package 1B\S1-CV-T1029-A3.dgn

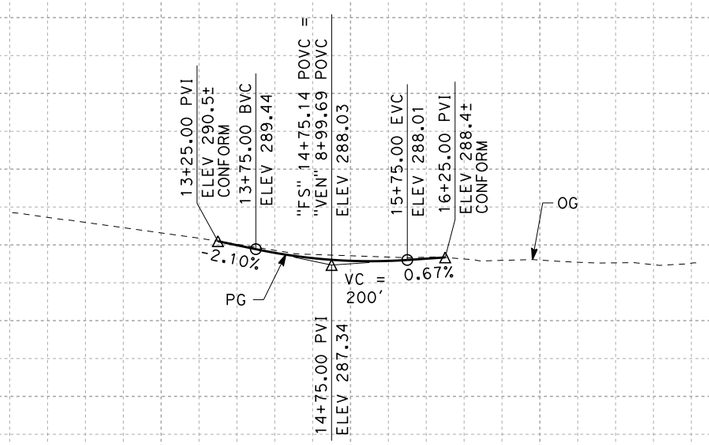

PROFILE

"FS" LINE (VENTURA ST)

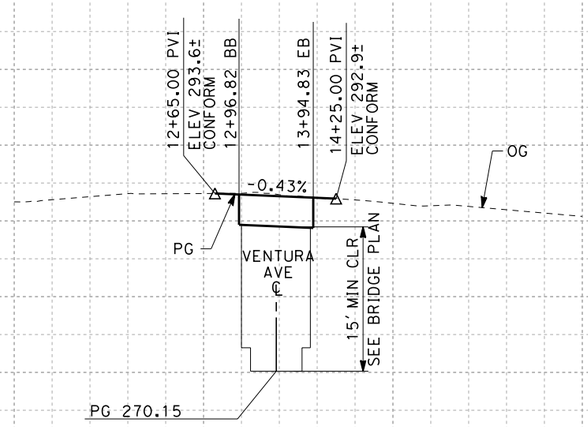

PROFILE

"GS" LINE (VENTURA ST)

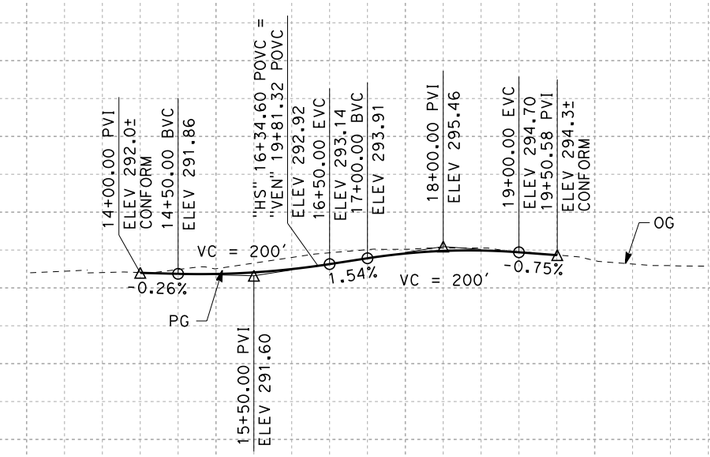

PROFILE

"HS" LINE (VENTURA ST)

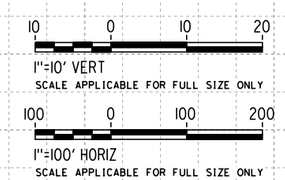

ADDENDUM 3 - RFP HSR 11-16

06/29/2012 ADDENDUM 3 - RFP HSR 11-16

REV	DATE	BY	CHK	APP	DESCRIPTION
A	2012-06	VO	BR	RP	REVISED FOR ADDENDUM 3

DESIGNED BY J. NETTLETON
DRAWN BY V. ORTEGA
CHECKED BY B. RAWSON
IN CHARGE Q. EARLE
DATE 06/12/12

PROPOSED PRELIMINARY DESIGN

NOT FOR CONSTRUCTION

URS | HMM | ARUP
CALIFORNIA HIGH-SPEED TRAIN

CALIFORNIA HIGH-SPEED RAIL AUTHORITY

CALIFORNIA HIGH-SPEED TRAIN PROJECT
SIERRA SUBDIVISION
PACKAGE 1B
ROADWAY
GRADE SEPARATION PROFILE
F ST/G ST/H ST

CONTRACT NO.
DRAWING NO. CV-T1029-A3
SCALE AS SHOWN
SHEET NO.

NOTES:

1. SUPERELEVATION AS SHOWN OR AS DIRECTED BY THE ENGINEER.
2. PAVEMENT SECTIONS ARE SHOWN FOR INFORMATIONAL PURPOSES ONLY.

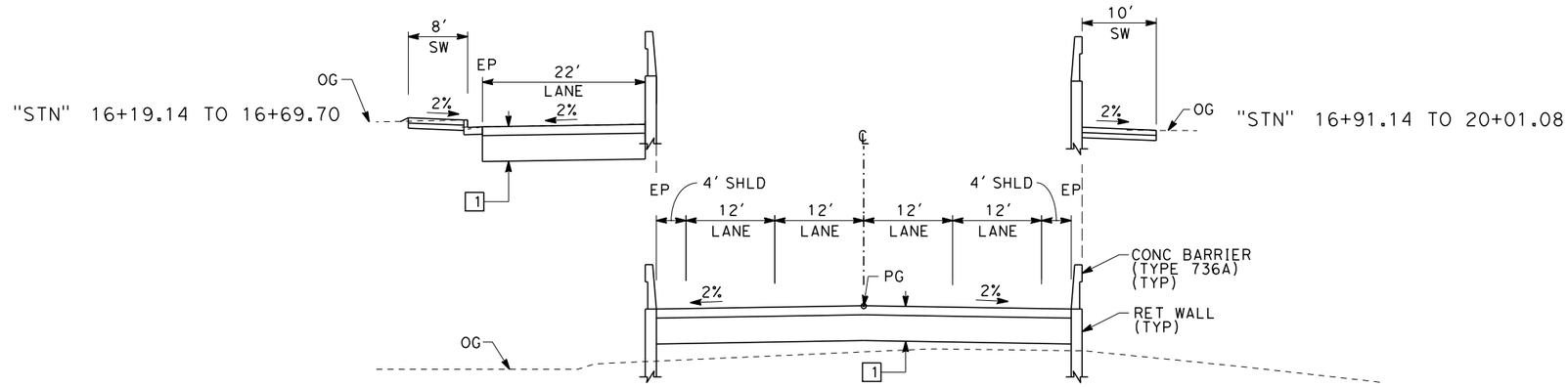

STANISLAUS ST
"STN" 16+19.14 TO 20+01.08

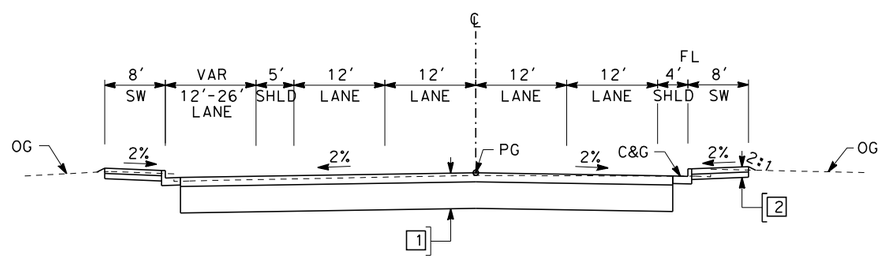

STANISLAUS ST
"STN" 12+71.87 TO 16+19.14

DESIGN SPEED TABLE

STREET NAME	ALIGNMENT DESIGNATION	DESIGN SPEED (MPH)
STANISLAUS ST	STN	30
TUOLUMNE ST	TUO	30
TULARE ST (HST UNDERPASS)	TU1	30
TULARE ST (HST OVERPASS)	TU2	25
VENTURA ST	VEN	25
F ST (STANISLAUS ST)	FS	30
F ST (VENTURA ST)	FS	35
G ST (VENTURA ST)	GS	40
H ST (VENTURA ST)	HS	35
FRESNO ST (HST OVERPASS)	FFS	35
G ST (FRESNO ST)	GS2	40

STRUCTURAL SECTIONS
TYPICAL ROADWAY

1 — 0.50' HMA (TYPE A)
1.50' CL2 AB

2 — 0.35' PCC
0.35' CL2 AB

10 0 10 20
1"=10'
SCALE APPLICABLE FOR FULL SIZE ONLY

ADDENDUM 3 - RFP HSR 11-16

REV	DATE	BY	CHK	APP	DESCRIPTION
A	2012-06	VO	BR	RP	REVISED FOR ADDENDUM 3

DESIGNED BY J. NETTLETON
DRAWN BY V. ORTEGA
CHECKED BY B. RAWSON
IN CHARGE O. EARLE
DATE 06/12/12

PROPOSED PRELIMINARY DESIGN
NOT FOR CONSTRUCTION

URS | HMM | ARUP
CALIFORNIA HIGH-SPEED TRAIN

CALIFORNIA HIGH-SPEED RAIL AUTHORITY

CALIFORNIA HIGH-SPEED TRAIN PROJECT
SIERRA SUBDIVISION
PACKAGE 1B
ROADWAY
ROADWAY / GRADE SEPARATION
TYPICAL SECTIONS

CONTRACT NO.
DRAWING NO. CV-T3007-A3
SCALE AS SHOWN
SHEET NO.

06/29/2012 ADDENDUM 3 - RFP HSR 11-16

J0553823 6/13/2012 8:43:26 AM CAHSRP-r1.tbl CHSR_PDF_half_black.pltG:_Sacramento\URS\235413 CA HSR Fresno Palmdale\16.0 Drawings\N-30% RBNSF Fresno\Sheet Files\Civil\Package 1B\S1-CV-T3007-A3.dgn

STRUCTURAL SECTIONS
TYPICAL ROADWAY

1 — 0.50' HMA (TYPE A)
1.50' CL2 AB

2 — 0.35' PCC
0.35' CL2 AB

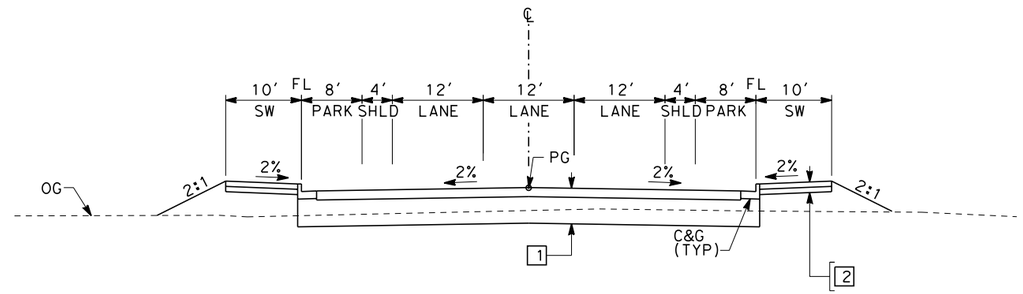

F ST (STANISLAUS)
"FS" 11+47.87 TO 13+26.00

"STN" 31+78.66 TO 32+60.00

"STN" 31+78.72 TO 32+60.00

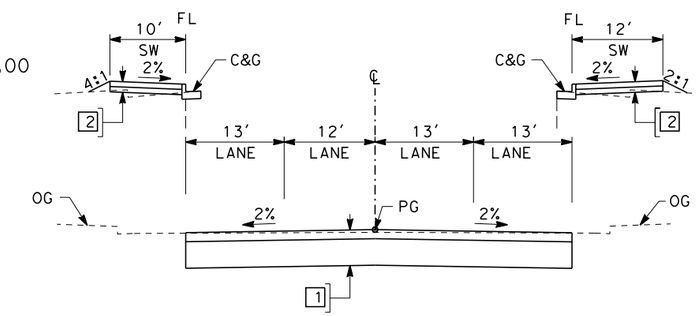

STANISLAUS ST
"STN" 30+78.65 TO 32+60.00

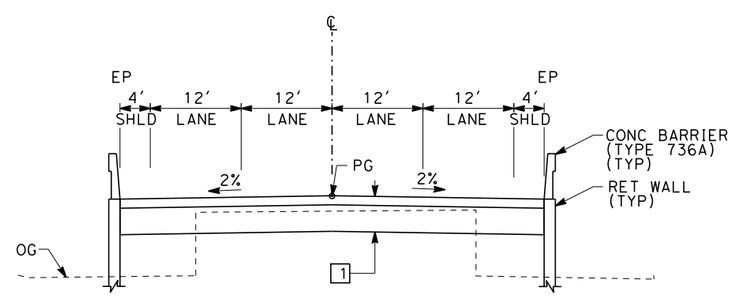

STANISLAUS ST
"STN" 27+96.08 TO 30+78.65

10 0 10 20
1"=10'
SCALE APPLICABLE FOR FULL SIZE ONLY

ADDENDUM 3 - RFP HSR 11-16

REV	DATE	BY	CHK	APP	DESCRIPTION
A	2012-06	VO	BR	RP	REVISED FOR ADDENDUM 3

DESIGNED BY J. NETTLETON
DRAWN BY V. ORTEGA
CHECKED BY B. RAWSON
IN CHARGE Q. EARLE
DATE 06/12/12

PROPOSED PRELIMINARY DESIGN
NOT FOR CONSTRUCTION

URS | HMM | ARUP
CALIFORNIA HIGH-SPEED TRAIN

CALIFORNIA HIGH-SPEED RAIL AUTHORITY

CALIFORNIA HIGH-SPEED TRAIN PROJECT
SIERRA SUBDIVISION
PACKAGE 1B
ROADWAY
ROADWAY / GRADE SEPARATION
TYPICAL SECTIONS

CONTRACT NO.
DRAWING NO. CV-T3008-A3
SCALE AS SHOWN
SHEET NO.

06/29/2012 ADDENDUM 3 - RFP HSR 11-16

or152801 6/12/2012 2:43:04 PM CAHSRP-r1.tbl CHSR_PDF_half_black.pltG:_Sacramento\URS\235413 CA HSR Fresno Palmdale\16.0 Drawings\N-30% RBNSF Fresno\Sheet Files\Civil\Package 1B\S1-CV-T3008-A3.dgn

STRUCTURAL SECTIONS
TYPICAL ROADWAY

1 — 0.50' HMA (TYPE A)
1.50' CL2 AB

2 — 0.35' PCC
0.35' CL2 AB

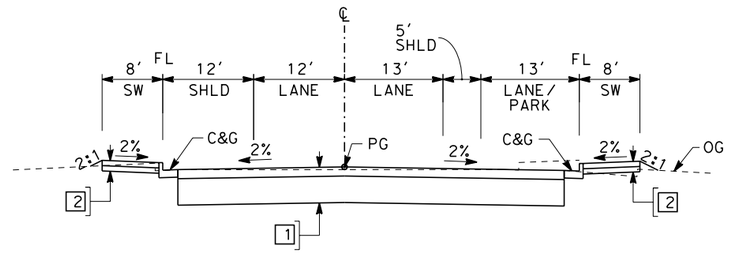

TUOLUMNE ST
"TUO" 25+05.94 TO 28+50.00

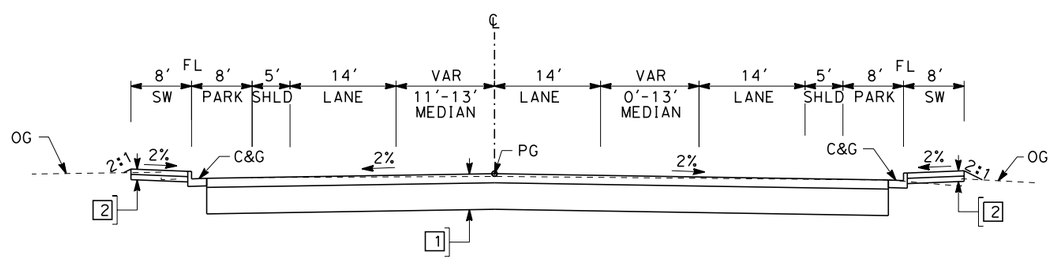

TUOLUMNE ST
"TUO" 14+43.00 TO 17+57.62

10 0 10 20
1"=10'
SCALE APPLICABLE FOR FULL SIZE ONLY

ADDENDUM 3 - RFP HSR 11-16

REV	DATE	BY	CHK	APP	DESCRIPTION
A	2012-06	VO	BR	RP	REVISED FOR ADDENDUM 3

DESIGNED BY J. NETTLETON
DRAWN BY V. ORTEGA
CHECKED BY B. RAWSON
IN CHARGE O. EARLE
DATE 06/12/12

PROPOSED PRELIMINARY DESIGN

NOT FOR CONSTRUCTION

URS | HMM | ARUP
CALIFORNIA HIGH-SPEED TRAIN

CALIFORNIA HIGH-SPEED RAIL AUTHORITY

CALIFORNIA HIGH-SPEED TRAIN PROJECT
SIERRA SUBDIVISION
PACKAGE 1B
ROADWAY
ROADWAY / GRADE SEPARATION
TYPICAL SECTIONS

CONTRACT NO.
DRAWING NO. CV-T3009-A3
SCALE AS SHOWN
SHEET NO.

06/29/2012 ADDENDUM 3 - RFP HSR 11-16
ort52801 6/12/2012 2:26:03 PM CAHSRP-r1.tbl CHSR_PDF_half_black.pltG:_Sacramento\URS\235413 CA HSR Fresno Palmdale\16.0 Drawings\N-30% RBNSF Fresno\Sheet Files\Civil\Package 1B\S1-CV-T3009-A3.dgn

STRUCTURAL SECTIONS
TYPICAL ROADWAY

1 — 0.50' HMA (TYPE A)
1.50' CL2 AB

2 — 0.35' PCC
0.35' CL2 AB

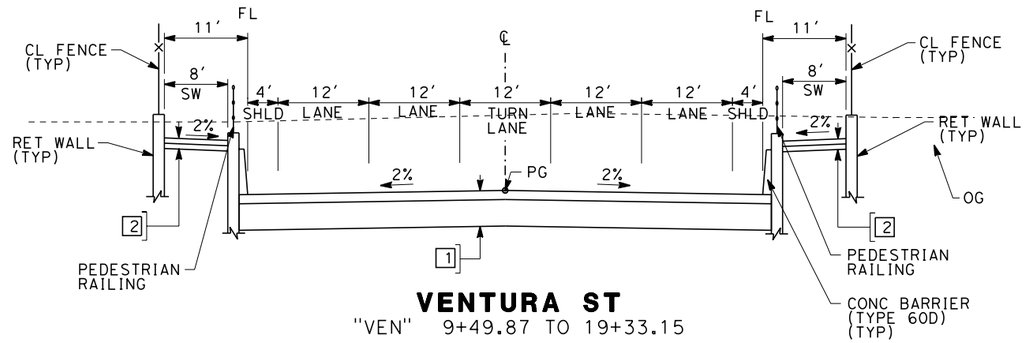

VENTURA ST
"VEN" 9+49.87 TO 19+33.15

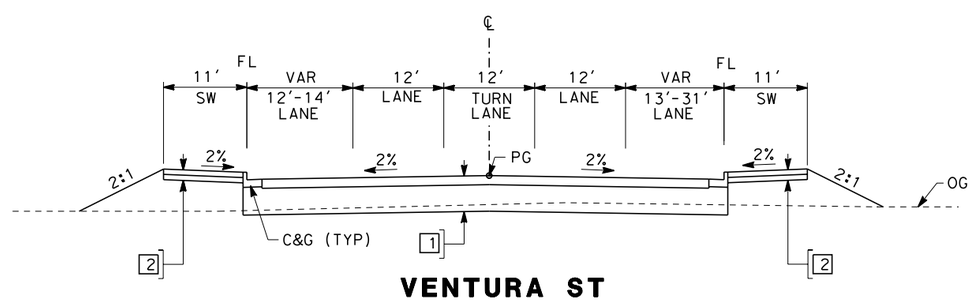

VENTURA ST
"VEN" 5+49.05 TO 9+49.87
"VEN" 19+33.15 TO 23+37.59

10 0 10 20
1"=10'
SCALE APPLICABLE FOR FULL SIZE ONLY

ADDENDUM 3 - RFP HSR 11-16

REV	DATE	BY	CHK	APP	DESCRIPTION
A	2012-06	VO	BR	RP	REVISED FOR ADDENDUM 3

DESIGNED BY J. NETTLETON
DRAWN BY V. ORTEGA
CHECKED BY B. RAWSON
IN CHARGE O. EARLE
DATE 06/12/12

PROPOSED PRELIMINARY DESIGN

NOT FOR CONSTRUCTION

URS | HMM | ARUP
CALIFORNIA HIGH-SPEED TRAIN

CALIFORNIA HIGH-SPEED RAIL AUTHORITY

CALIFORNIA HIGH-SPEED TRAIN PROJECT
SIERRA SUBDIVISION
PACKAGE 1B
ROADWAY
ROADWAY / GRADE SEPARATION
TYPICAL SECTIONS

CONTRACT NO.
DRAWING NO. CV-T3010-A3
SCALE AS SHOWN
SHEET NO.

06/29/2012 ADDENDUM 3 - RFP HSR 11-16

ort52801 6/12/2012 2:26:34 PM CAHSRP-r1.tbl CHSR_PDF_half_black.pltG:_Sacramento\URS\235413 CA HSR Fresno Palmdale\16.0 Drawings\N-30% RBNSF Fresno\Sheet Files\Civil\Package 1B\S1-CV-T3010-A3.dgn

STRUCTURAL SECTION
TYPICAL ROADWAY

1 — 0.50' HMA (TYPE A)
1.50' CL2 AB

2 — 0.35' PCC
0.35' CL2 AB

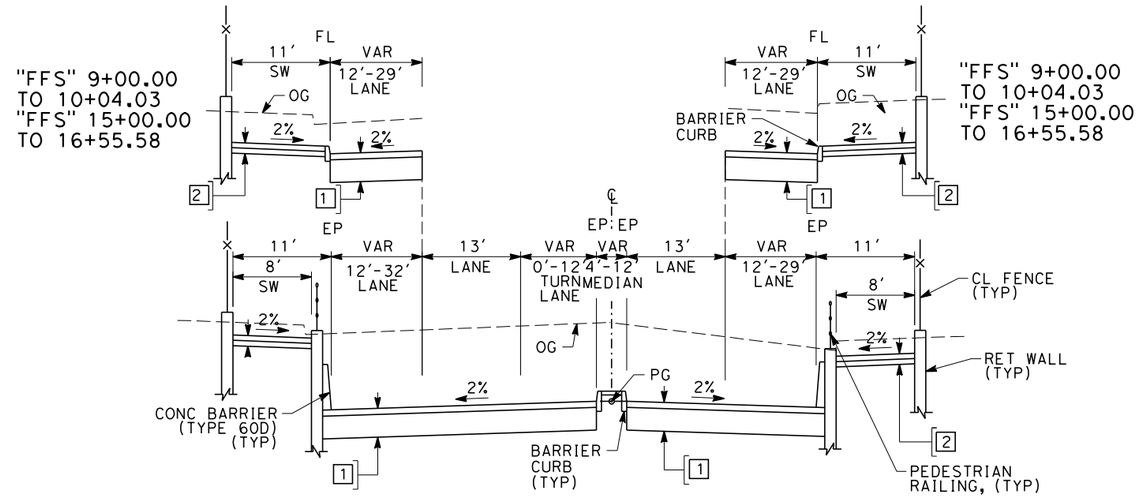

FRESNO STREET
"FFS" 9+00.00 TO 16+55.58

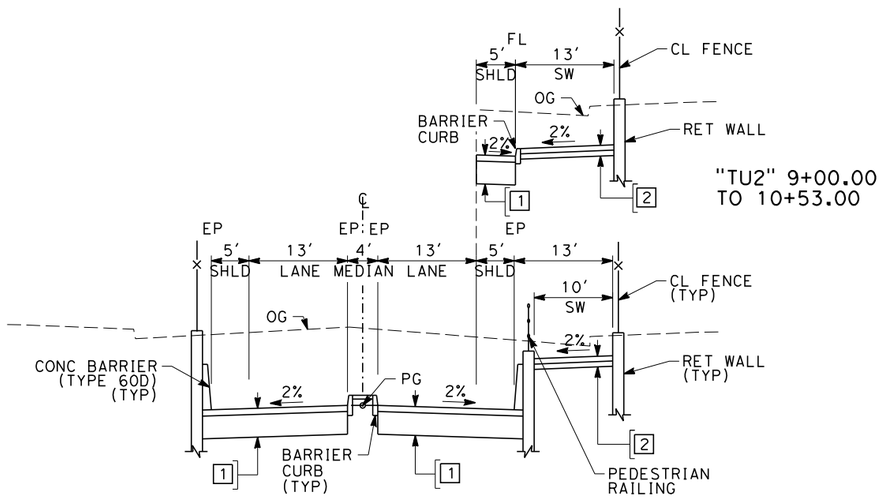

TULARE STREET (HST OVERPASS)
"TU2" 9+00.00 TO 20+35.06

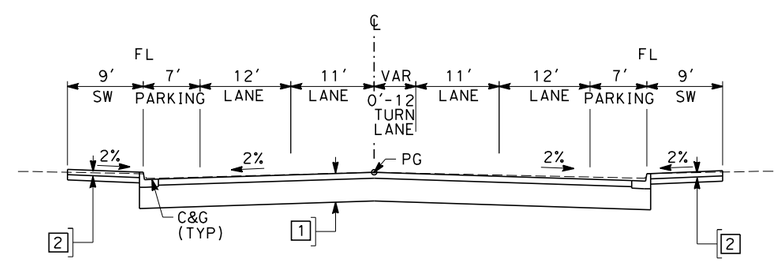

G ST
"GS" 41+15.14 TO 42+60.11
"GS" 43+17.11 TO 44+65.14
"GS2" 30+00.00 TO 33+00.00
"GS2" 34+00.00 TO 37+00.00

ADDENDUM 3 - RFP HSR 11-16

REV	DATE	BY	CHK	APP	DESCRIPTION
A	2012-06	ES	MB	RP	REVISED FOR ADDENDUM 3

DESIGNED BY J. MONG
DRAWN BY E. SUDHAUSEN
CHECKED BY S. BURGES
IN CHARGE R. COFFIN
DATE 06/12/12

PROPOSED PRELIMINARY DESIGN
NOT FOR CONSTRUCTION

URS | HMM | ARUP
CALIFORNIA HIGH-SPEED TRAIN

CALIFORNIA HIGH-SPEED RAIL AUTHORITY

CALIFORNIA HIGH-SPEED TRAIN PROJECT
SIERRA SUBDIVISION
PACKAGE 1B
ROADWAY
ROADWAY / GRADE SEPARATION
TYPICAL SECTION

CONTRACT NO.
DRAWING NO. CV-T3011-A3
SCALE AS SHOWN
SHEET NO.

06/29/2012 ADDENDUM 3 - RFP HSR 11-16

eron.sudhauser6/12/2012 1:59:20 PM CAHSRP-r1.tbl PDF_half_black_200dpi.pkhglobal\americas\Jobs\S-F\131000\131577\4 Internal Project Data\4-03 Drawings\4-03-03 30% Design\4-03-03-05 Design Sheets\Highway\

STRUCTURAL SECTIONS
TYPICAL ROADWAY

1 — 0.50' HMA (TYPE A)
1.50' CL2 AB

2 — 0.35' PCC
0.35' CL2 AB

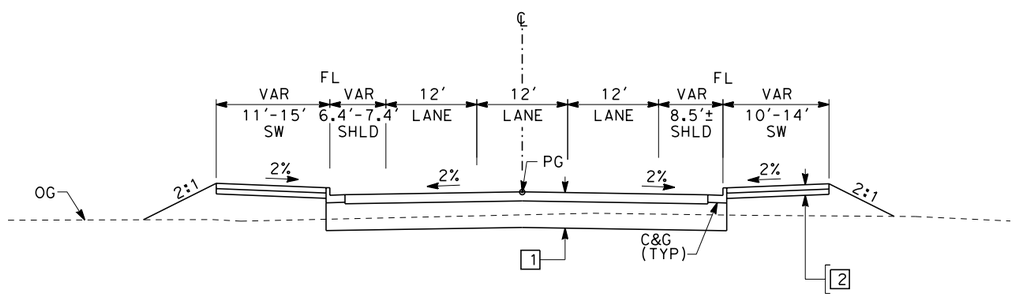

F ST (VENTURA)
"FS" 13+50.00 TO 16+00.00

10 0 10 20
1"=10'
SCALE APPLICABLE FOR FULL SIZE ONLY

ADDENDUM 3 - RFP HSR 11-16

REV	DATE	BY	CHK	APP	DESCRIPTION
A	2012-06	VO	BR	RP	REVISED FOR ADDENDUM 3

DESIGNED BY J. NETTLETON
DRAWN BY V. ORTEGA
CHECKED BY B. RAWSON
IN CHARGE O. EARLE
DATE 06/12/12

PROPOSED PRELIMINARY DESIGN

NOT FOR CONSTRUCTION

URS | HMM | ARUP
CALIFORNIA HIGH-SPEED TRAIN

CALIFORNIA HIGH-SPEED RAIL AUTHORITY

CALIFORNIA HIGH-SPEED TRAIN PROJECT
SIERRA SUBDIVISION
PACKAGE 1B
ROADWAY
ROADWAY / GRADE SEPARATION
TYPICAL SECTIONS

CONTRACT NO.
DRAWING NO. CV-T3012-A3
SCALE AS SHOWN
SHEET NO.

06/29/2012 ADDENDUM 3 - RFP HSR 11-16

ort52801 6/12/2012 2:26:49 PM CAHSRP-r1.tbl CHSR_PDF_half_black.pltG:_Sacramento\URS\235413 CA HSR Fresno Palmdale\16.0 Drawings\N-30% RBNSF Fresno\Sheet Files\Civil\Package 1B\S1-CV-T3012-A3.dgn

ort52801 6/12/2012 2:27:16 PM CAHSRP-r1.tbl CHSR_PDF_half_black.pltG:_Sacramento\URS\235413 CA HSR Fresno Palmdale\16.0 Drawings\N-30% RBNSF Fresno\Sheet Files\Civil\Package 1B\S1-CV-T3013-A3.dgn

STRUCTURAL SECTIONS
TYPICAL ROADWAY

1 — 0.50' HMA (TYPE A)
1.50' CL2 AB

2 — 0.35' PCC
0.35' CL2 AB

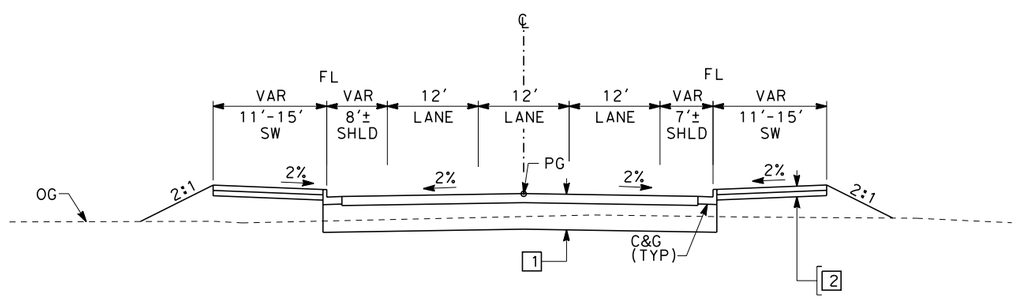

H ST (VENTURA)
"HS" 14+00.00 TO 19+50.00

10 0 10 20
1"=10'
SCALE APPLICABLE FOR FULL SIZE ONLY

ADDENDUM 3 - RFP HSR 11-16

REV	DATE	BY	CHK	APP	DESCRIPTION
A	2012-06	VO	BR	RP	REVISED FOR ADDENDUM 3

DESIGNED BY J. NETTLETON
DRAWN BY V. ORTEGA
CHECKED BY B. RAWSON
IN CHARGE O. EARLE
DATE 06/12/12

PROPOSED PRELIMINARY DESIGN

NOT FOR CONSTRUCTION

URS | HMM | ARUP
CALIFORNIA HIGH-SPEED TRAIN

CALIFORNIA HIGH-SPEED RAIL AUTHORITY

CALIFORNIA HIGH-SPEED TRAIN PROJECT
SIERRA SUBDIVISION
PACKAGE 1B
ROADWAY
ROADWAY / GRADE SEPARATION
TYPICAL SECTIONS

CONTRACT NO.
DRAWING NO. CV-T3013-A3
SCALE AS SHOWN
SHEET NO.

06/29/2012 ADDENDUM 3 - RFP HSR 11-16

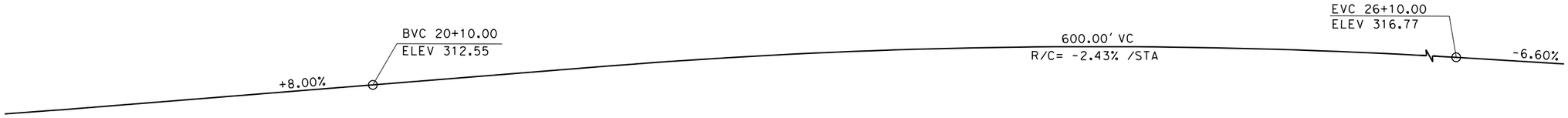

PROFILE GRADE
NO SCALE

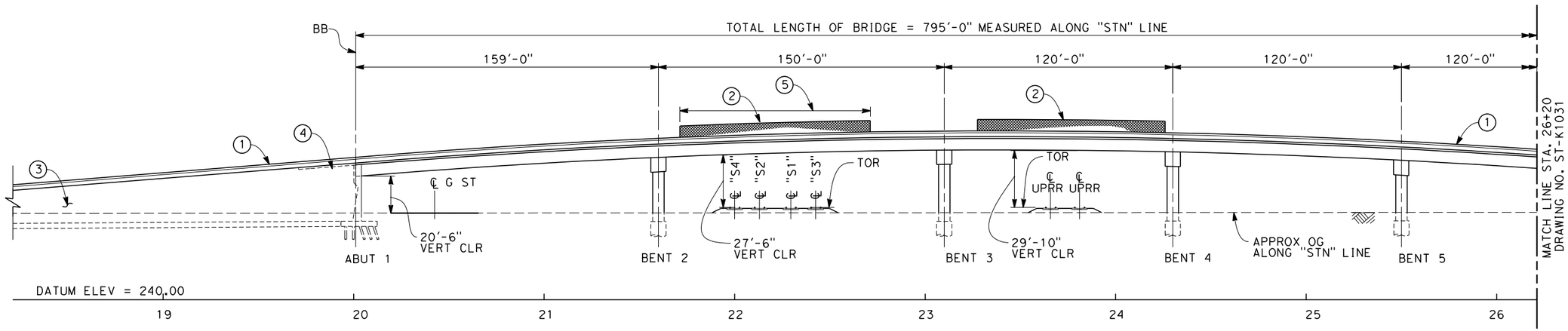

ELEVATION
SCALE: 1"=30'-0"

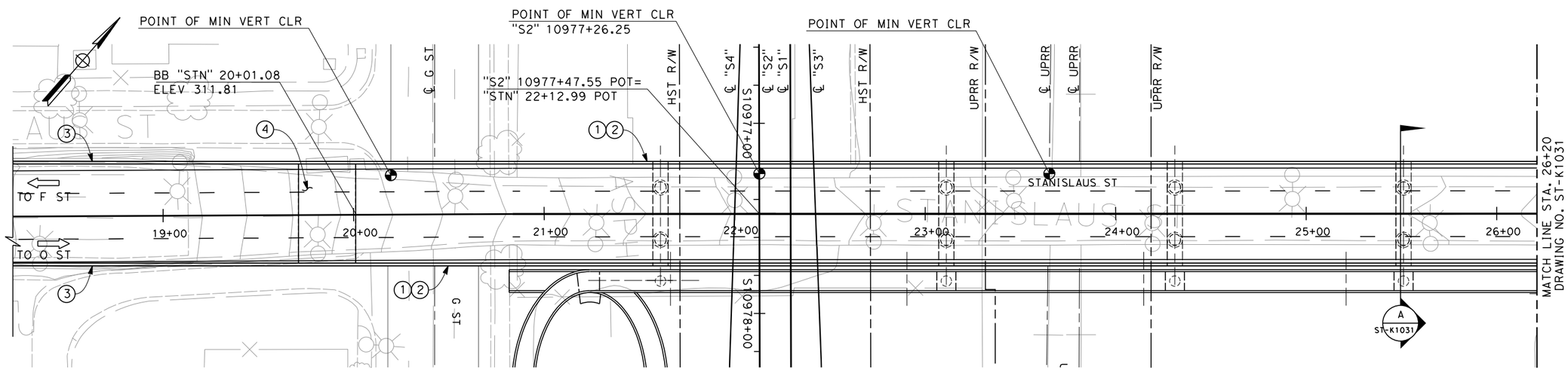

PLAN
SCALE: 1"=30'-0"

NOTES:

1. CONCRETE BARRIER (TYPE 736 MODIFIED)
2. AR FENCE
3. RETAINING WALL, MSE
4. STRUCTURE APPROACH SLAB
5. SOLID PLATE ON AR FENCE

ADDENDUM 3 - RFP HSR 11-16

REV	DATE	BY	CHK	APP	DESCRIPTION
A	2012-06	FP	AA	RP	REVISED FOR ADDENDUM A

DESIGNED BY S.T. MAK
DRAWN BY F. PALERMO
CHECKED BY A. ARMSTRONG
IN CHARGE R. COFFIN
DATE 06/12/12

PROPOSED PRELIMINARY DESIGN

NOT FOR CONSTRUCTION

URS | HMM | ARUP
CALIFORNIA HIGH-SPEED TRAIN

CALIFORNIA HIGH-SPEED RAIL AUTHORITY

CALIFORNIA HIGH-SPEED TRAIN PROJECT
SIERRA SUBDIVISION
PACKAGE 1B
ROADWAY
DRAFT GENERAL PLAN
STANISLAUS ST - SHEET 1 OF 2

CONTRACT NO.
DRAWING NO. ST-K1030-A3
SCALE AS SHOWN
SHEET NO.

frank.palermo 6/12/2012 5:08:19 PM CAHSRP-r1.tbl PDF_half_black_200dpi.pkglobalamericas\Jobs\S-F\131000\131577\4 Internal Project Data\4-03 Drawings\4-03-03 30% Design\4-03-03-05 Design Sheets\Structur

06/29/2012 ADDENDUM 3 - RFP HSR 11-16

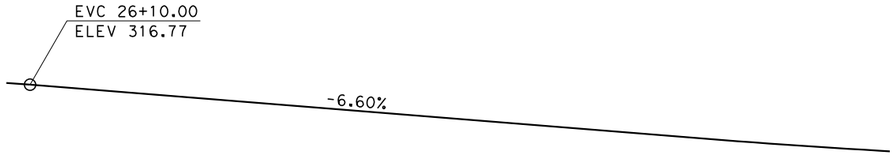

PROFILE GRADE
NO SCALE

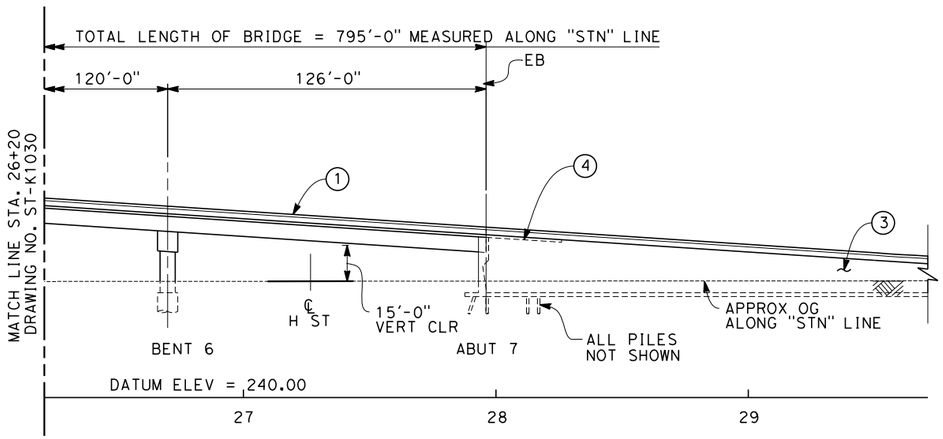

ELEVATION
SCALE: 1"=30'-0"

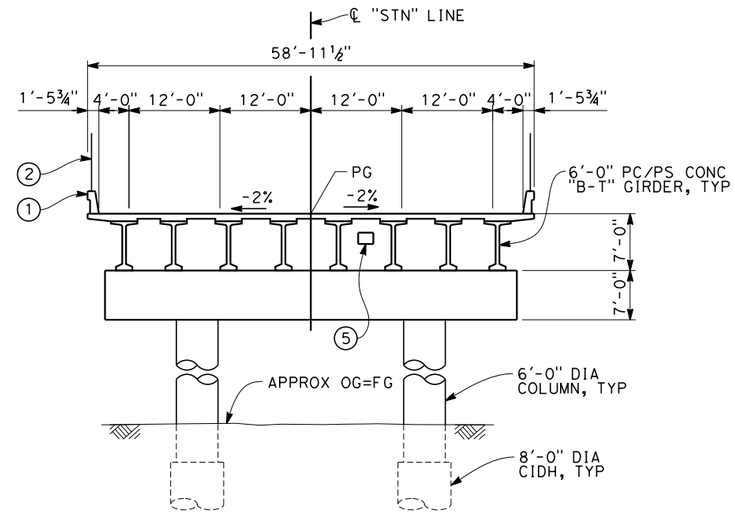

SECTION A
SCALE: 1"=10'-0"

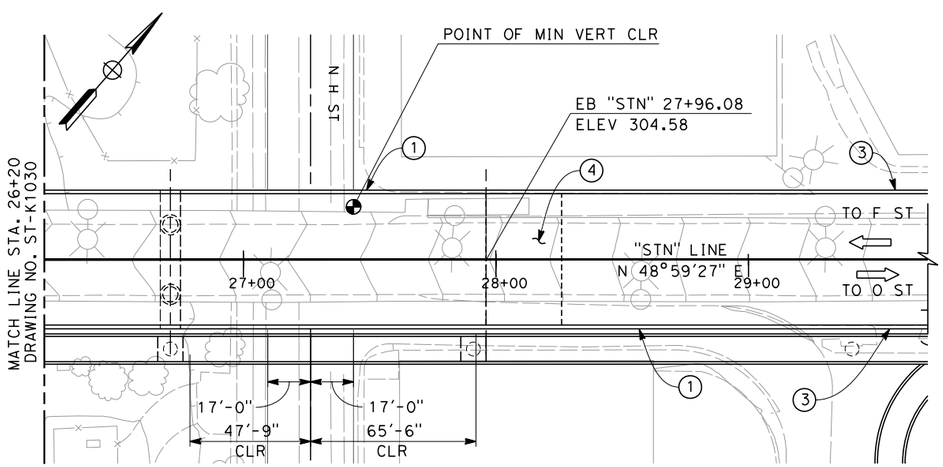

PLAN
SCALE: 1"=30'-0"

NOTES:

1. CONCRETE BARRIER (TYPE 736 MODIFIED)
2. AR FENCE
3. RETAINING WALL, MSE
4. STRUCTURE APPROACH SLAB
5. FUTURE UTILITY OPENING

ADDENDUM 3 - RFP HSR 11-16

06/29/2012 ADDENDUM 3 - RFP HSR 11-16

REV	DATE	BY	CHK	APP	DESCRIPTION
A	2012-06	FP	AA	RP	REVISED FOR ADDENDUM A

DESIGNED BY S.T. MAK
DRAWN BY F. PALERMO
CHECKED BY A. ARMSTRONG
IN CHARGE R. COFFIN
DATE 06/12/12

PROPOSED PRELIMINARY DESIGN
NOT FOR CONSTRUCTION

URS | HMM | ARUP
CALIFORNIA HIGH-SPEED TRAIN

CALIFORNIA HIGH-SPEED RAIL AUTHORITY

CALIFORNIA HIGH-SPEED TRAIN PROJECT
SIERRA SUBDIVISION
PACKAGE 1B
ROADWAY
DRAFT GENERAL PLAN
STANISLAUS ST - SHEET 2 OF 2

CONTRACT NO.
DRAWING NO. ST-K1031-A3
SCALE AS SHOWN
SHEET NO.

frank.palermo 6/12/2012 5:08:28 PM CAHSRP-r1.tbl PDF_half_black_200dpi.pltglobal\americas\Jobs\S-F\131000\131577\4 Internal Project Data\4-03 Drawings\4-03-03 30% Design\4-03-03-05 Design Sheets\Structur

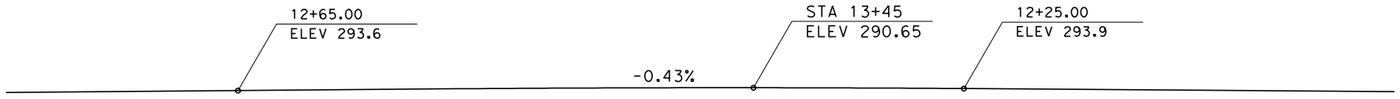

PROFILE GRADE
NO SCALE

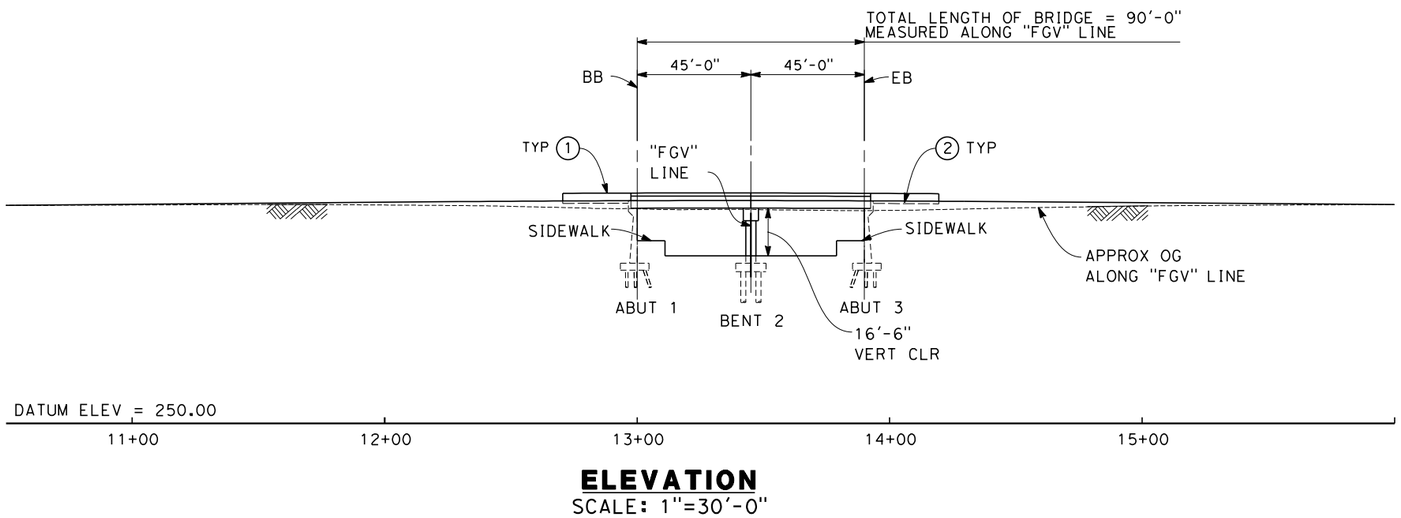

ELEVATION
SCALE: 1"=30'-0"

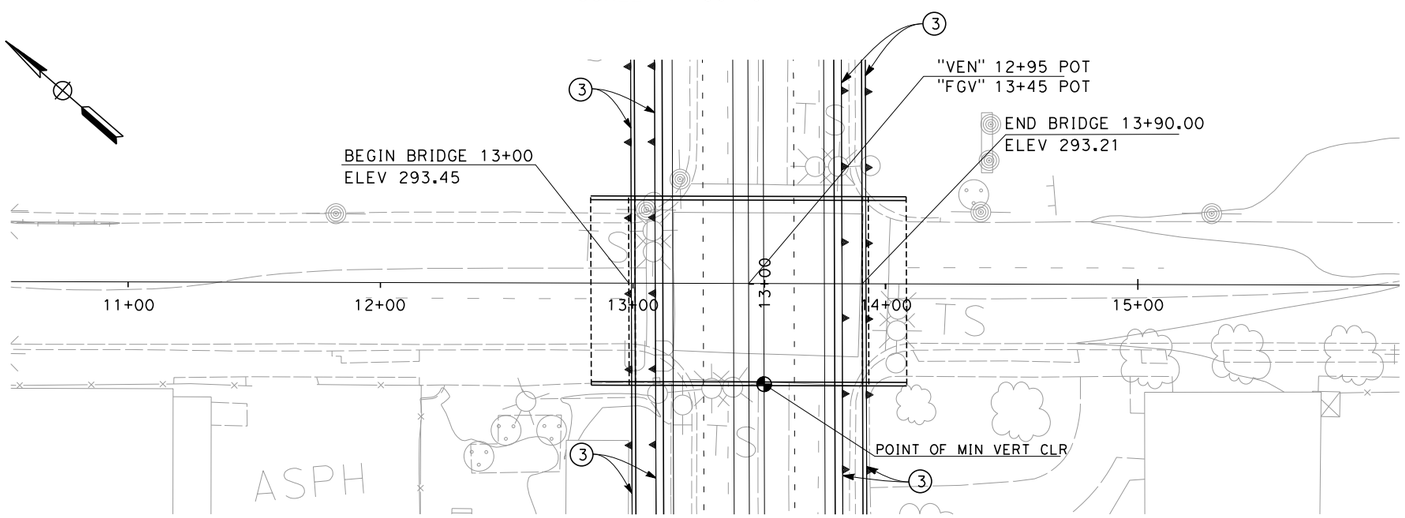

PLAN
SCALE: 1"=30'-0"

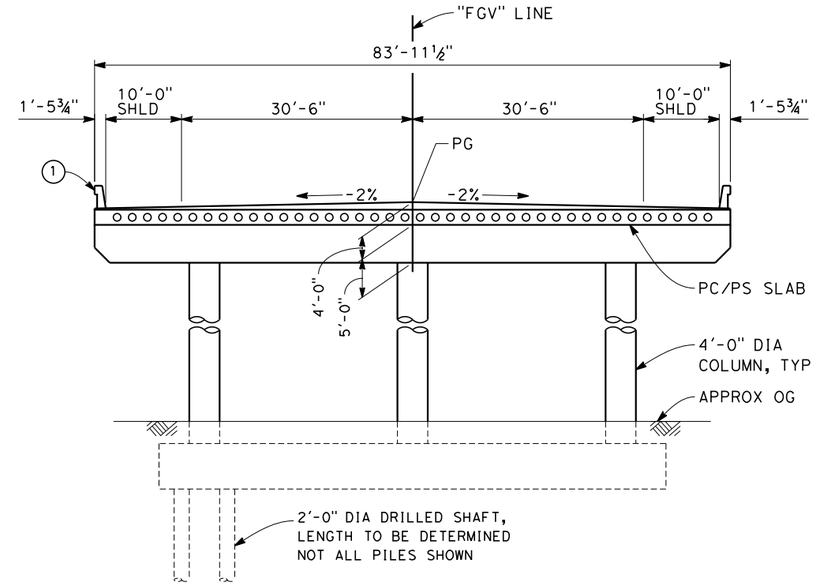

TYPICAL SECTION
SCALE: 1"=10'-0"

NOTES:

1. CONCRETE BARRIER (TYPE 736 MODIFIED)
2. STRUCTURE APPROACH SLAB

ADDENDUM 3 - RFP HSR 11-16

REV	DATE	BY	CHK	APP	DESCRIPTION
A	2012-06	FP	AA	RP	REVISED FOR ADDENDUM A

DESIGNED BY S.T. MAK
DRAWN BY F. PALERMO
CHECKED BY A. ARMSTRONG
IN CHARGE R. COFFIN
DATE 06/12/12

PROPOSED PRELIMINARY DESIGN

NOT FOR CONSTRUCTION

URS | HMM | ARUP
CALIFORNIA HIGH-SPEED TRAIN

CALIFORNIA HIGH-SPEED RAIL AUTHORITY

CALIFORNIA HIGH-SPEED TRAIN PROJECT
SIERRA SUBDIVISION
PACKAGE 1B
ROADWAY
DRAFT GENERAL PLAN
G ST (VENTURA ST OVERPASS)

CONTRACT NO.
DRAWING NO. ST-K1036-A3
SCALE AS SHOWN
SHEET NO.

frank.palermo 6/12/2012 5:08:36 PM CAHSRP-r1.tbl PDF_half_black_200dpi.pkglobalamericas\Jobs\S-F\131000\131577\4 Internal Project Data\4-03 Drawings\4-03-03 30% Design\4-03-03-05 Design Sheets\Structur

06/29/2012 ADDENDUM 3 - RFP HSR 11-16

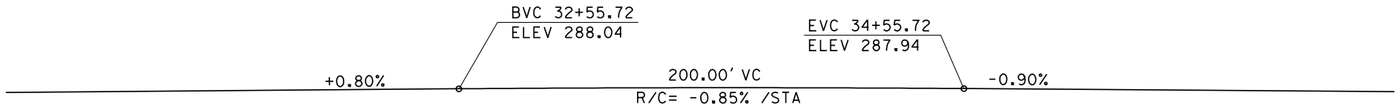

PROFILE GRADE

NO SCALE

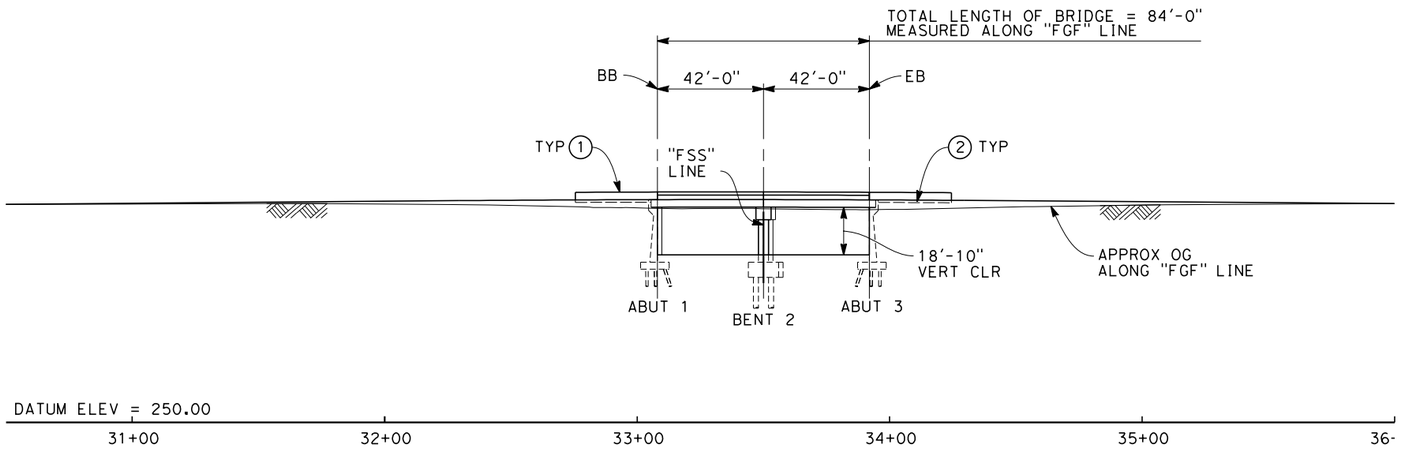

ELEVATION

SCALE: 1"=30'-0"

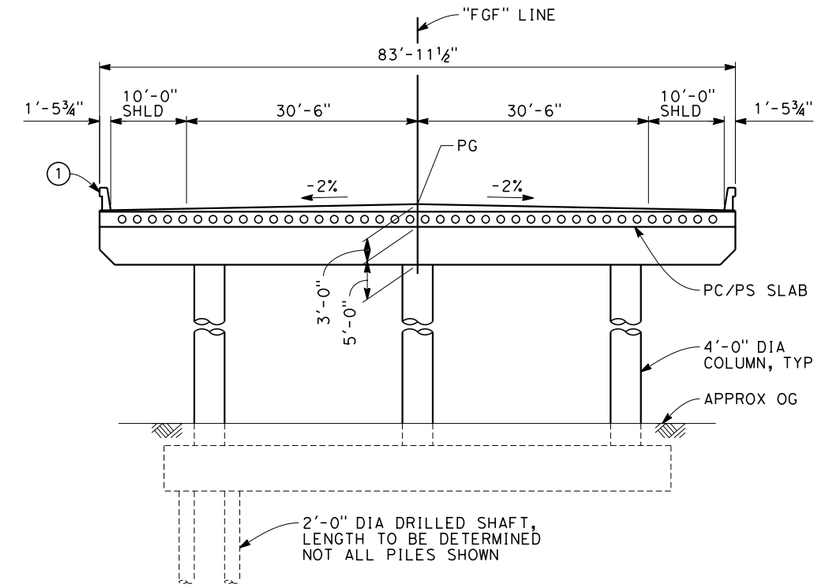

TYPICAL SECTION

SCALE: 1"=10'-0"

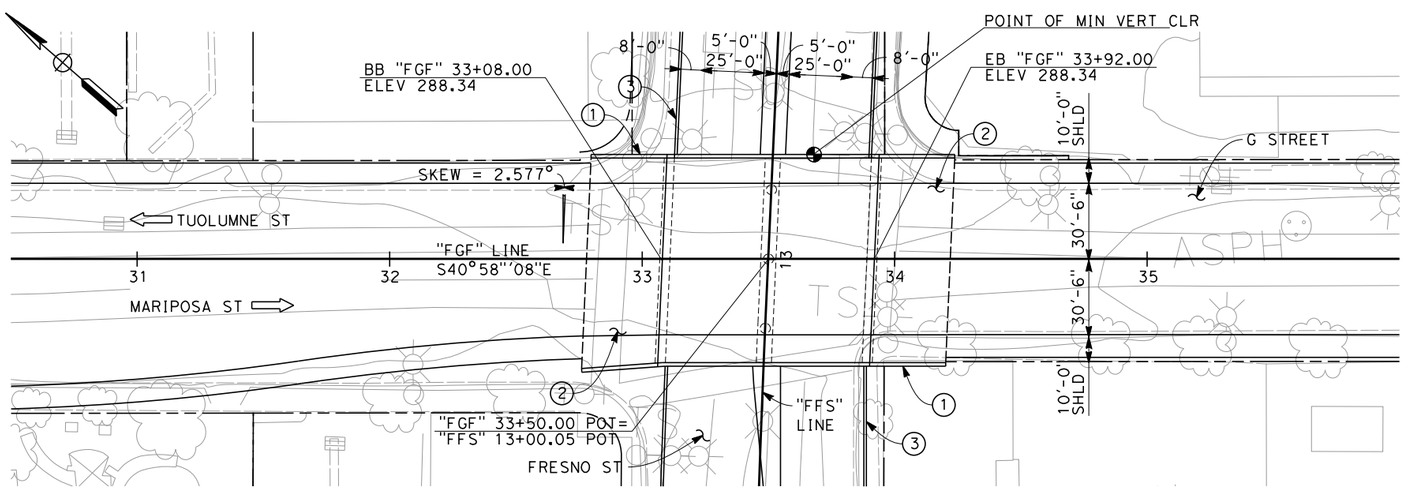

PLAN

SCALE: 1"=30'-0"

NOTES:

1. CONCRETE BARRIER (TYPE 736 MODIFIED)
2. STRUCTURE APPROACH SLAB
3. RETAINING WALL, TYPE TO BE DETERMINED

ADDENDUM 3 - RFP HSR 11-16

REV	DATE	BY	CHK	APP	DESCRIPTION
A	2012-06	FP	AA	RP	REVISED FOR ADDENDUM A

DESIGNED BY S.T. MAK
DRAWN BY J. VALENZUELA
CHECKED BY A. ARMSTRONG
IN CHARGE R. COFFIN
DATE 06/12/12

PROPOSED PRELIMINARY DESIGN

NOT FOR CONSTRUCTION

URS | HMM | ARUP
CALIFORNIA HIGH-SPEED TRAIN

CALIFORNIA HIGH-SPEED RAIL AUTHORITY

CALIFORNIA HIGH-SPEED TRAIN PROJECT
SIERRA SUBDIVISION
PACKAGE 1B
ROADWAY
DRAFT GENERAL PLAN
G ST (FRESNO ST OVERPASS)

CONTRACT NO.
DRAWING NO. ST-K1041-A3
SCALE AS SHOWN
SHEET NO.

frank.palermo 6/12/2012 5:08:43 PM CAHSRP-r1.tbl PDF_half_black_200dpi.pltglobal\americas\Jobs\S-F\131000\131577\4 Internal Project Data\4-03 Drawings\4-03-03 30% Design\4-03-03-05 Design Sheets\Structur

06/29/2012 ADDENDUM 3 - RFP HSR 11-16

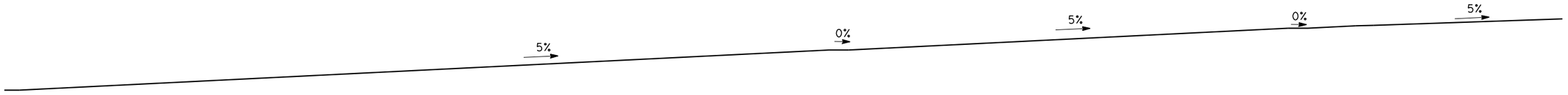

PROFILE GRADE

NO SCALE

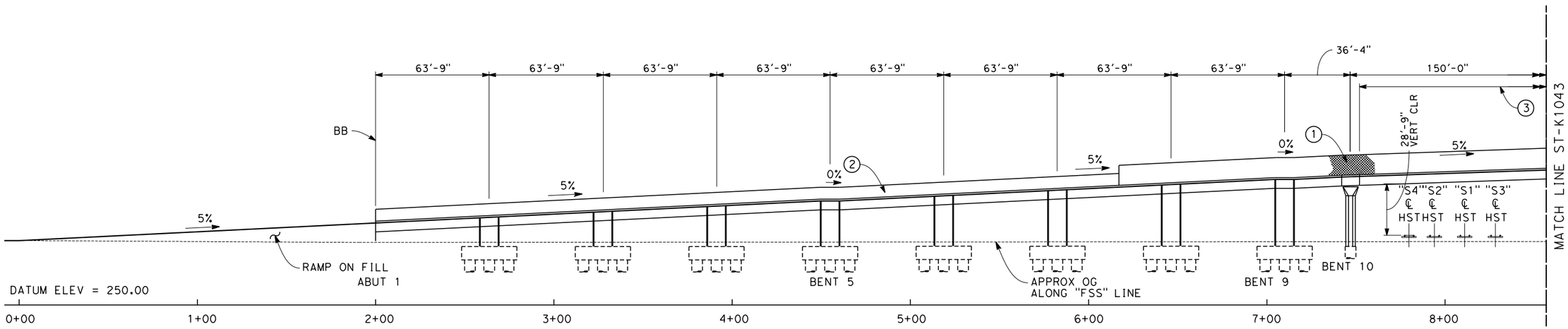

DEVELOPED ELEVATION

SCALE: 1"=30'-0"

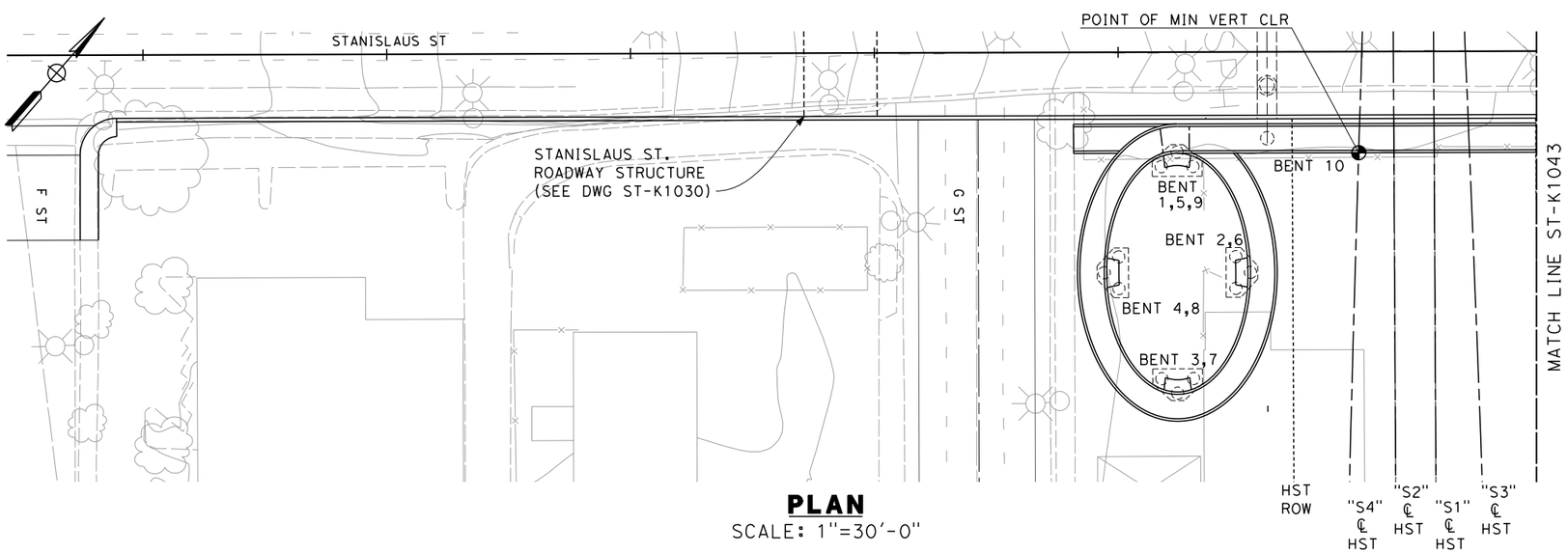

PLAN

SCALE: 1"=30'-0"

NOTES:

1. AR FENCE
2. PEDESTRIAN FENCE
3. SOLID PLATE ON AR FENCE

ADDENDUM 3 - RFP HSR 11-16

REV	DATE	BY	CHK	APP	DESCRIPTION
A	2012-06	FP	AA	RP	REVISED FOR ADDENDUM A

DESIGNED BY M. FISHER
DRAWN BY F. PALERMO
CHECKED BY A. ARMSTRONG
IN CHARGE R. COFFIN
DATE 06/12/12

PROPOSED PRELIMINARY DESIGN

NOT FOR CONSTRUCTION

URS | HMM | ARUP
CALIFORNIA HIGH-SPEED TRAIN

CALIFORNIA HIGH-SPEED RAIL AUTHORITY

CALIFORNIA HIGH-SPEED TRAIN PROJECT
SIERRA SUBDIVISION
PACKAGE 1B
ROADWAY
DRAFT GENERAL PLAN
STANISLAUS ST - PEDESTRIAN BRIDGE

CONTRACT NO.
DRAWING NO. ST-K1042-A3
SCALE AS SHOWN
SHEET NO.

frank.palermo 6/12/2012 5:08:53 PM CAHSRP-r1.tbl PDF_half_black_200dpi.pktglobal\americas\Jobs\S-F\131000\131577\4 Internal Project Data\4-03 Drawings\4-03-03 30% Design\4-03-03-05 Design Sheets\Structur

06/29/2012 ADDENDUM 3 - RFP HSR 11-16

PROFILE GRADE

NO SCALE

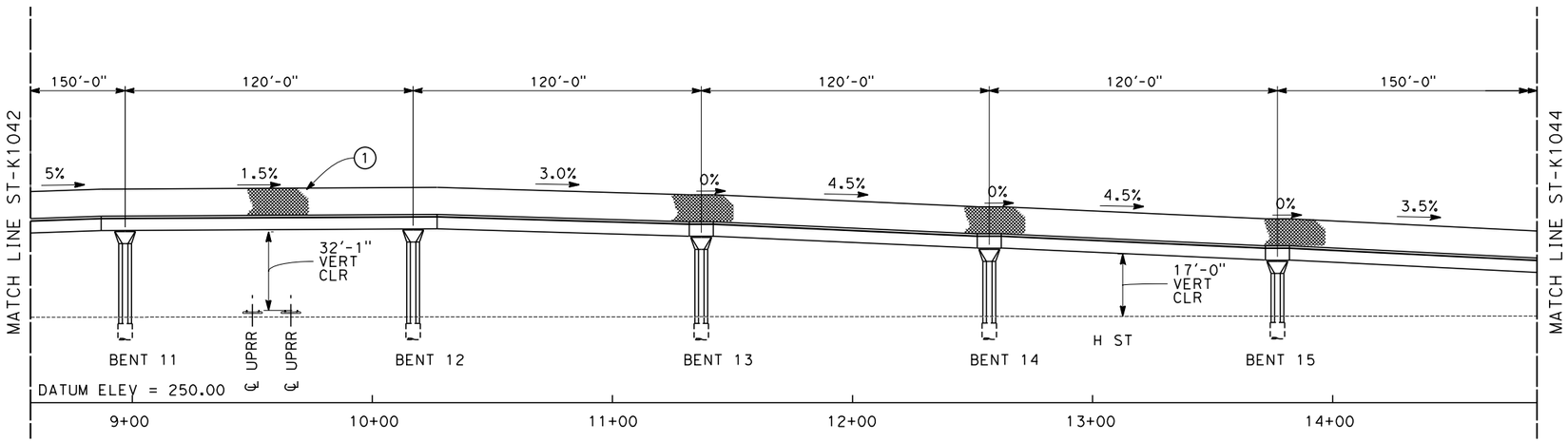

DEVELOPED ELEVATION

SCALE: 1"=30'-0"

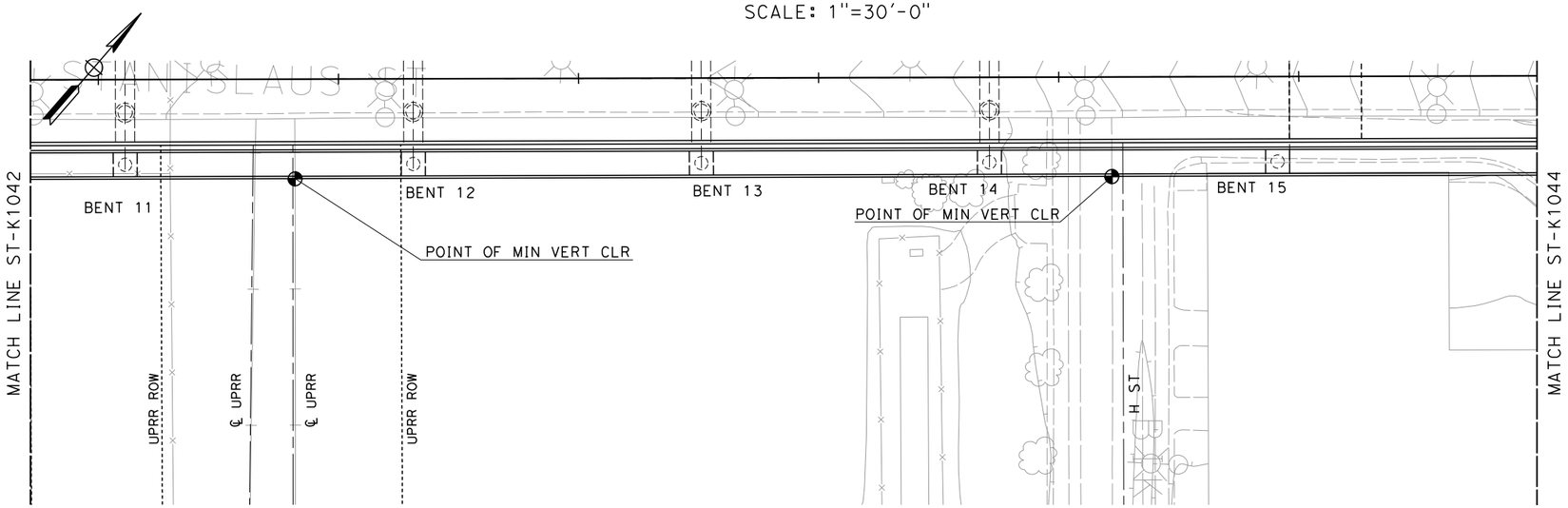

PLAN

SCALE: 1"=30'-0"

NOTES:

1. AR FENCE
2. PEDESTRIAN FENCE
3. SOLID PLATE ON AR FENCE

ADDENDUM 3 - RFP HSR 11-16

REV	DATE	BY	CHK	APP	DESCRIPTION
A	2012-06	FP	AA	RP	REVISED FOR ADDENDUM A

DESIGNED BY M. FISHER
DRAWN BY F. PALERMO
CHECKED BY A. ARMSTRONG
IN CHARGE R. COFFIN
DATE 06/12/12

PROPOSED PRELIMINARY DESIGN

NOT FOR CONSTRUCTION

URS | HMM | ARUP
CALIFORNIA HIGH-SPEED TRAIN

CALIFORNIA HIGH-SPEED RAIL AUTHORITY

CALIFORNIA HIGH-SPEED TRAIN PROJECT
SIERRA SUBDIVISION
PACKAGE 1B
ROADWAY
DRAFT GENERAL PLAN
STANISLAUS ST - PEDESTRIAN BRIDGE

CONTRACT NO.
DRAWING NO. ST-K1043-A3
SCALE AS SHOWN
SHEET NO.

frank.palermo 6/12/2012 5:08:59 PM CAHSRP-r1.tbl PDF_half_black_200dpi.pktglobal\americas\Jobs\S-F\131000\131577\4 Internal Project Data\4-03 Drawings\4-03-03 30% Design\4-03-03-05 Design Sheets\Structur

06/29/2012 ADDENDUM 3 - RFP HSR 11-16

PROFILE GRADE
NO SCALE

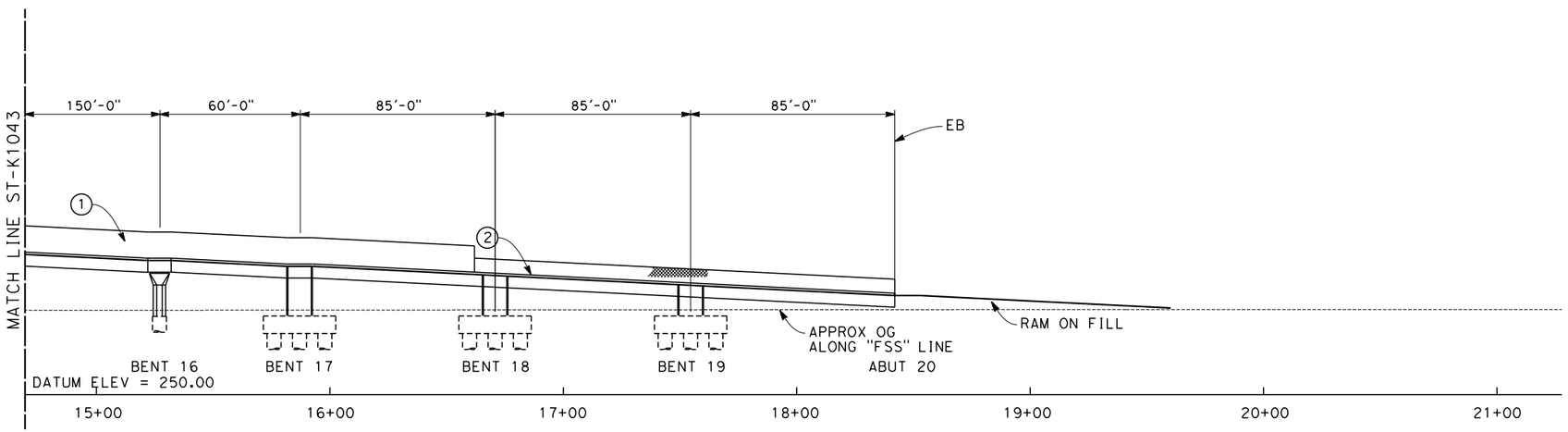

DEVELOPED ELEVATION
SCALE: 1"=30'-0"

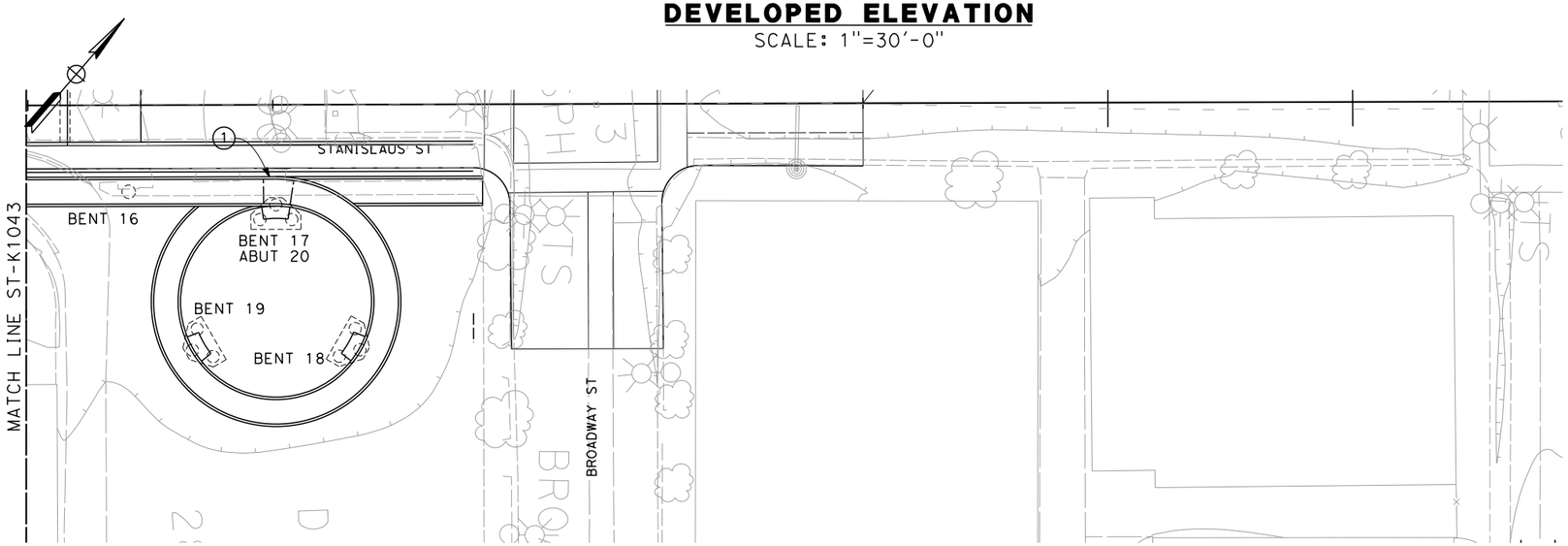

PLAN
SCALE: 1"=30'-0"

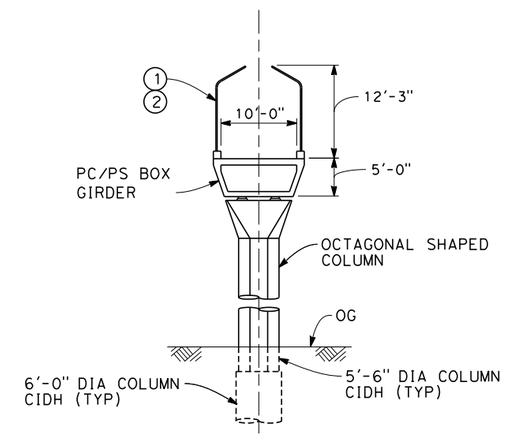

SECTION
SCALE: 1"=10'-0"

NOTES:

1. AR FENCE
2. PEDESTRIAN FENCE
3. SOLID PLATE ON AR FENCE

ADDENDUM 3 - RFP HSR 11-16

REV	DATE	BY	CHK	APP	DESCRIPTION
A	2012-06	FP	AA	RP	REVISED FOR ADDENDUM A

DESIGNED BY M. FISHER
DRAWN BY F. PALERMO
CHECKED BY A. ARMSTRONG
IN CHARGE R. COFFIN
DATE 06/12/12

PROPOSED PRELIMINARY DESIGN

NOT FOR CONSTRUCTION

URS | HMM | ARUP
CALIFORNIA HIGH-SPEED TRAIN

CALIFORNIA HIGH-SPEED RAIL AUTHORITY

CALIFORNIA HIGH-SPEED TRAIN PROJECT
SIERRA SUBDIVISION
PACKAGE 1B
ROADWAY
DRAFT GENERAL PLAN
STANISLAUS ST - PEDESTRIAN BRIDGE

CONTRACT NO.
DRAWING NO. ST-K1044-A3
SCALE AS SHOWN
SHEET NO.

frank.palermo 6/12/2012 5:17:31 PM CAHSRP-r1.tbl PDF_half_black_200dpi.pktglobal\americas\Jobs\S-F\131000\131577\4 Internal Project Data\4-03 Drawings\4-03-03 30% Design\4-03-03-05 Design Sheets\Structur

06/29/2012 ADDENDUM 3 - RFP HSR 11-16