California High-Speed Train Project

Request for Proposal for Design-Build Services

RFP No.: HSR 11-16

Contract Package 1A

North of Veterans Blvd to North of Stanislaus St

06/29/2012 ADDENDUM 3 - RFP HSR 11-16

THIS PAGE INTENTIONALLY LEFT BLANK

CALIFORNIA
HIGH-SPEED RAIL AUTHORITY

PROPOSED PRELIMINARY DESIGN
CALIFORNIA HIGH-SPEED TRAIN PROJECT
SIERRA SUBDIVISION
CONTRACT PACKAGE 1A

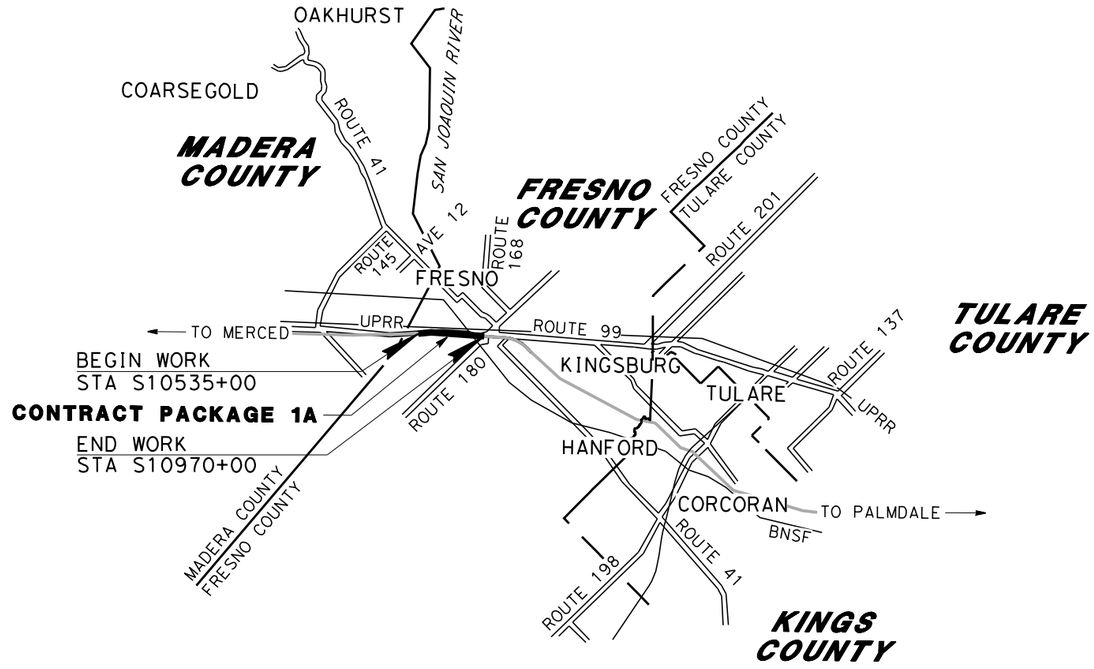

REGISTERED PROFESSIONAL ENGINEER
No.
Exp.
CIVIL
STATE OF CALIFORNIA

REGISTERED PROFESSIONAL ENGINEER
No.
Exp.
CIVIL
STATE OF CALIFORNIA

REV A
ADDENDUM 3 - RFP HSR 11-16
JUNE 2012

PROJECT LOCATION MAP

U.S. Department of Transportation
Federal Railroad Administration

URS | HMM | ARUP
CALIFORNIA HIGH-SPEED TRAIN

AECOM Technical Services, Inc.
3020 L Street, Suite 300
Sacramento, CA 95816
CH2MHILL

CONTRACT No.

06/29/2012 ADDENDUM 3 - RFP HSR 11-16

eron.sudhausen 6/13/2012 11:25:00 AM \\global\americas\Jobs\S-F\131000\131577\4 Internal Project Data\4-03 Drawings\4-03-03 30% Design\4-03-03-05 Design Sheets\General\Package 1A\1S-GE-D0001-A3.dgn

GENERAL NOTES
LOAD AND RESISTANCE FACTOR DESIGN

DESIGN:	HIGH SPEED RAIL DESIGN CRITERIA, AASHTO LRFD BRIDGE DESIGN SPECIFICATIONS 4th EDITION AND CALTRANS AMENDMENTS
STANDARD SPECIFICATIONS:	HIGH SPEED RAIL SPECIFICATIONS, CALTRANS STANDARD SPECIFICATIONS DATED MAY 2006
SEISMIC DESIGN:	HIGH SPEED RAIL DESIGN CRITERIA, CALTRANS SEISMIC DESIGN CRITERIA (SDC) VERSION 1.6, NOVEMBER 2010
DEAD LOAD:	INCLUDES 35 PSF FOR FUTURE WEARING SURFACE
LIVE LOADING:	HL93 AND PERMIT DESIGN LOAD
WIND LOAD:	100 MPH WIND VELOCITY
REINFORCED CONCRETE:	fy = 60 ksi f'c = SEE CONCRETE STRENGTH AND TYPE LIMITS
PRESTRESSED CONCRETE:	LOW RELAXATION STRANDS fpy = 243 ksi fpu = 270 ksi f'ci = 5 ksi AT TIME OF RELEASE f'c = 7 ksi AT 28 DAYS
~~PILES:~~	~~CLASS 200 PILES~~ ~~B2-8~~ ~~CLASS 140 PILES~~ ~~CLASS 90 PILES~~ ~~B2-5~~

A

THE ARS CURVES SHOWN BELOW ARE FOR PRELIMINARY DESIGN. REVISED ARS CURVES WILL BE PROVIDED FOR DETAILED DESIGN. A

ARS: MCE (5%)

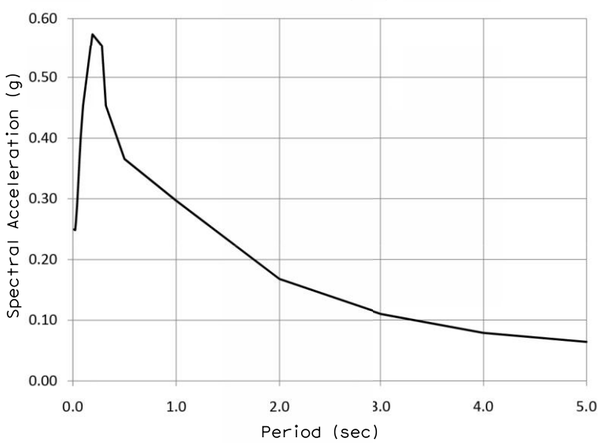

ARS: OBE (5%)

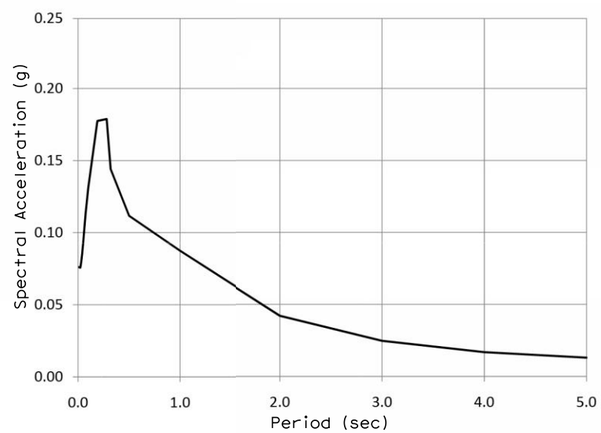

GENERAL STRUCTURAL NOTES

1. PILE/SHAFT LENGTHS TO BE DETERMINED
2. EMBEDDED ITEMS REQUIRED FOR UTILITY INSTALLATIONS ARE NOT SHOWN ON THE STRUCTURAL DRAWINGS. CONTRACTOR SHALL REFER TO THE UTILITY DRAWINGS FOR THE LOCATIONS AND DETAILS OF THESE ITEMS.
3. MSE WALL REINFORCEMENT AND PANEL TO BE DETERMINED
4. ALL STRUCTURAL DRAWINGS SHALL BE READ IN CONJUNCTION WITH THE SPECIFICATIONS AND OTHER DRAWINGS RELATED TO THE WORK.
5. ALL SPANS ARE DESIGNED CONTINUOUS FOR LIVE LOAD.

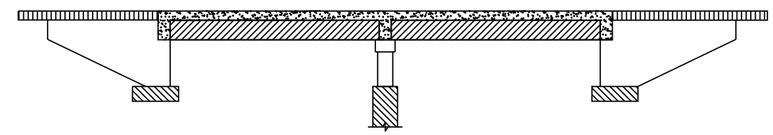

- STRUCTURAL CONCRETE, BRIDGE
  f'c = 5 ksi AT 28 DAYS
- STRUCTURAL CONCRETE, APPROACH SLAB
  f'c = 4 ksi AT 28 DAYS
- STRUCTURAL CONCRETE, SUPERSTRUCTURE
  f'c = 5 ksi AT 28 DAYS
- STRUCTURAL CONCRETE, BRIDGE FOOTING
  f'c = 4 ksi AT 28 DAYS
- PRECAST PRESTRESSED GIRDER
  f'c = SEE PRESTRESSED CONCRETE

CONCRETE STRENGTH AND TYPE LIMITS
NO SCALE

ADDENDUM 3 - RFP HSR 11-16

REV	DATE	BY	CHK	APP	DESCRIPTION
A	2012-06	VO	BR	RP	REVISED FOR ADDENDUM 3

DESIGNED BY M. BURGARD
DRAWN BY D. BARNHART
CHECKED BY L. SMITH
IN CHARGE Y. BERI
DATE 06/12/12

PROPOSED PRELIMINARY DESIGN
NOT FOR CONSTRUCTION

URS | HMM | ARUP
CALIFORNIA HIGH-SPEED TRAIN

CALIFORNIA HIGH-SPEED RAIL AUTHORITY

CALIFORNIA HIGH-SPEED TRAIN PROJECT
SIERRA SUBDIVISION
PACKAGE 1A
ROADWAY
GENERAL STRUCTURAL NOTES

CONTRACT NO.
DRAWING NO. CV-B0002-A3
SCALE AS SHOWN
SHEET NO.

06/29/2012 ADDENDUM 3 - RFP HSR 11-16

CHSR_PDF_half_black.pltG:_Sacramento\URS\235413 CA HSR Fresno Palmdale\16.0 Drawings\N-30% RBNSF Fresno\Sheet Files\Structures\S1-ST-I0001-GNT-A-A3.dgn
6/12/2012 2:58:32 PM
or152801

LOCATION NO.	SHEET TITLE	ROADWAY DWG NO.	STRUCTURE DWG NO.
1	GRADE SEPARATION - MCKINLEY AVE	CV-T1001 - CV-T1003	ST-K1026
2	GRADE SEPARATION - OLIVE AVE	CV-T1007 - CV-T1008	ST-K1027
3	GRADE SEPARATION - BELMONT AVE	CV-T1009 - CV-T1010	ST-K1028 - ST-K1029
21	LOCAL ROAD - MCKINLEY AVE CONNECTOR	CV-T1001 & CV-T1003	-
22	LOCAL ROAD - N WEBER AVE	CV-T1001 & CV-T1003	-
23	LOCAL ROAD - N WEST AVE	CV-T1004	-
24	LOCAL ROAD - N GOLDEN STATE BLVD	CV-T1001 - CV-T1006	-
25	LOCAL ROAD - N H ST / N WEBER AVE	CV-T1009 & CV-T1011	-

LOCATION NO.	SHEET TITLE	ROADWAY DWG NO.	STRUCTURE DWG NO.
40	ROAD CLOSURE - N DELNO AVE	CV-T1007	-
41	ROAD CLOSURE - N GOLDEN STATE BLVD	CV-T1004 - CV-T1007	-
42	ROAD CLOSURE - N HARRISON AVE	CV-T1009	-
43	ROAD CLOSURE - N THORNE AVE	CV-T1009	-
44	ROAD CLOSURE - N WESLEY AVE	CV-T1009 & CV-T1011	-

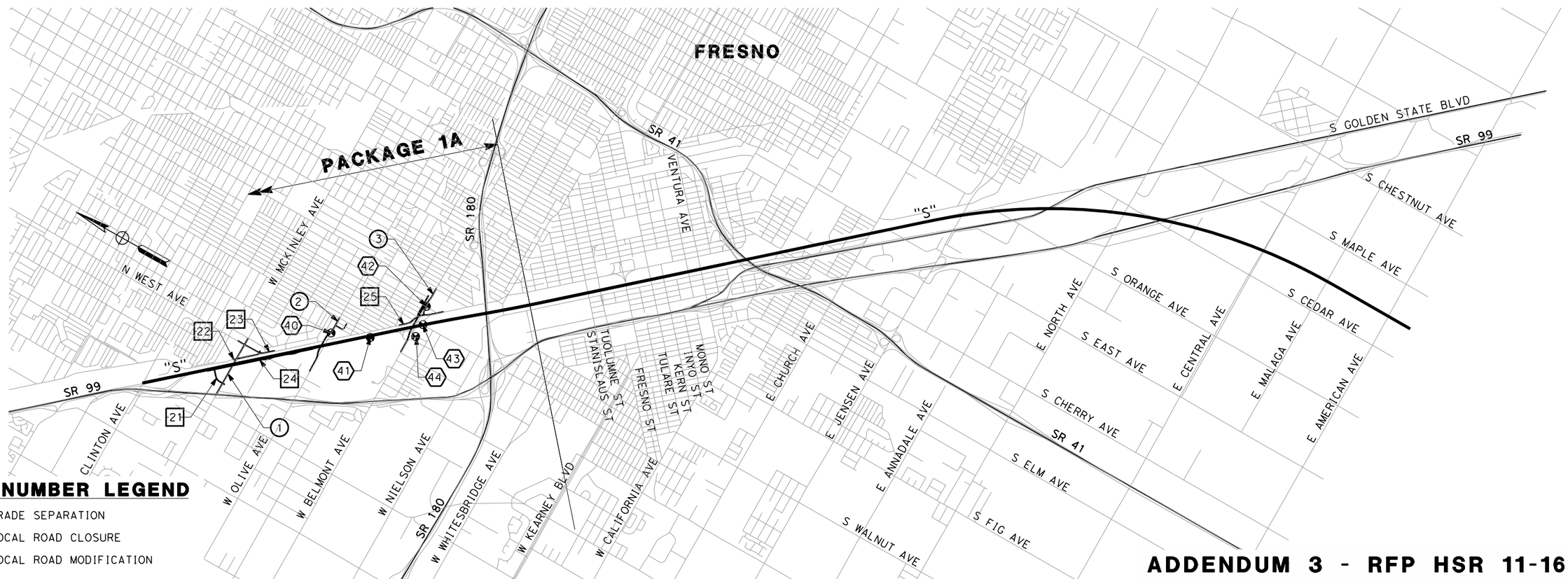

LOCATION NUMBER LEGEND

- (#) - INDICATES GRADE SEPARATION
- (#) - INDICATES LOCAL ROAD CLOSURE
- [#] - INDICATES LOCAL ROAD MODIFICATION

ADDENDUM 3 - RFP HSR 11-16

REV	DATE	BY	CHK	APP	DESCRIPTION
A	2012-06	VO	BR	RP	REVISED FOR ADDENDUM 3

DESIGNED BY I. JOSIFEK
DRAWN BY V. ORTEGA
CHECKED BY B. RAWSON
IN CHARGE O. EARLE
DATE 06/12/12

PROPOSED PRELIMINARY DESIGN

NOT FOR CONSTRUCTION

URS | HMM | ARUP
CALIFORNIA HIGH-SPEED TRAIN

CALIFORNIA HIGH-SPEED RAIL AUTHORITY

CALIFORNIA HIGH-SPEED TRAIN PROJECT
SIERRA SUBDIVISION
PACKAGE 1A
ROADWAY
INDEX MAP

CONTRACT NO.
DRAWING NO. CV-B0003-A3
SCALE NO SCALE
SHEET NO.

06/29/2012 ADDENDUM 3 - RFP HSR 11-16

or152801 6/12/2012 2:12:19 PM CAHSRP-r1.tbl CHSR_PDF_half_black.pltG:_Sacramento\URS\235413 CA HSR Fresno Palmdale\16.0 Drawings\N-30% RBNSF Fresno\Sheet Files\Civil\Package 1A\S1-CV-B0003-A3.dgn

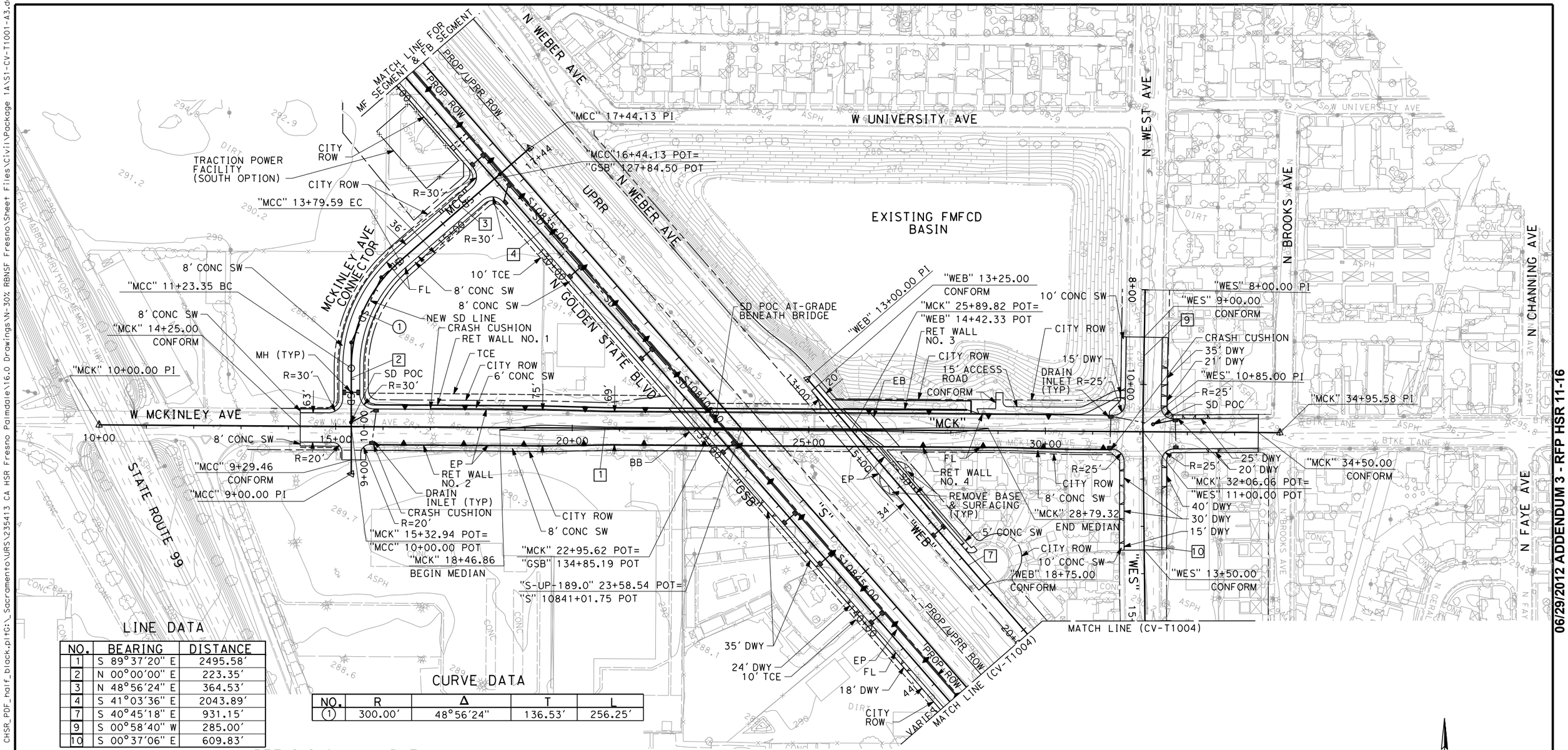

LINE DATA

NO.	BEARING	DISTANCE
1	S 89°37'20" E	2495.58'
2	N 00°00'00" E	223.35'
3	N 48°56'24" E	364.53'
4	S 41°03'36" E	2043.89'
7	S 40°45'18" E	931.15'
9	S 00°58'40" W	285.00'
10	S 00°37'06" E	609.83'

CURVE DATA

NO.	R	Δ	T	L
1	300.00'	48°56'24"	136.53'	256.25'

RETAINING WALL DATA

NO.	LOCATIONS		LENGTH	AVG HEIGHT
	BEGIN	END		
1	45.50' LT "MCK" 15+80.44	42.50' LT "MCK" 22+17.63	637'	20'
2	37.50' RT "MCK" 15+80.44	34.50' RT "MCK" 22+88.21	708'	20'
3	42.50' LT "MCK" 26+07.75	34.50' LT "MCK" 30+70.00	447'	17'
4	34.50' RT "MCK" 26+78.12	37.50' RT "MCK" 31+39.23	461'	15'

100 0 100 200

1"=100'

SCALE APPLICABLE FOR FULL SIZE ONLY

ADDENDUM 3 - RFP HSR 11-16

REV	DATE	BY	CHK	APP	DESCRIPTION
A	2012-06	VO	BR	RP	REVISED FOR ADDENDUM 3

DESIGNED BY J. NETTLETON
DRAWN BY V. ORTEGA
CHECKED BY B. RAWSON
IN CHARGE Q. EARLE
DATE 06/12/12

PROPOSED PRELIMINARY DESIGN

NOT FOR CONSTRUCTION

URS | HMM | ARUP
CALIFORNIA HIGH-SPEED TRAIN

CALIFORNIA HIGH-SPEED RAIL AUTHORITY

CALIFORNIA HIGH-SPEED TRAIN PROJECT
SIERRA SUBDIVISION
PACKAGE 1A
ROADWAY
GRADE SEPARATION LAYOUT
W MCKINLEY AVE

CONTRACT NO.
DRAWING NO. CV-T1001-A3
SCALE AS SHOWN
SHEET NO.

06/29/2012 ADDENDUM 3 - RFP HSR 11-16

or152801 6/12/2012 2:12:44 PM CAHSRP-r1.tbl CHSR_PDF_half_black.pltG:_Sacramento\URS\235413 CA HSR Fresno Palmdale\16.0 Drawings\N-30% RBNSF Fresno\Sheet Files\Civil\Package 1A\S1-CV-T1001-A3.dgn

NOTES:

1. FOR BRIDGE INFORMATION, SEE STRUCTURAL PLANS.
2. SIDEWALK PROFILE CONTROLLED BY ROADWAY PROFILE EXCEPT AS SHOWN.

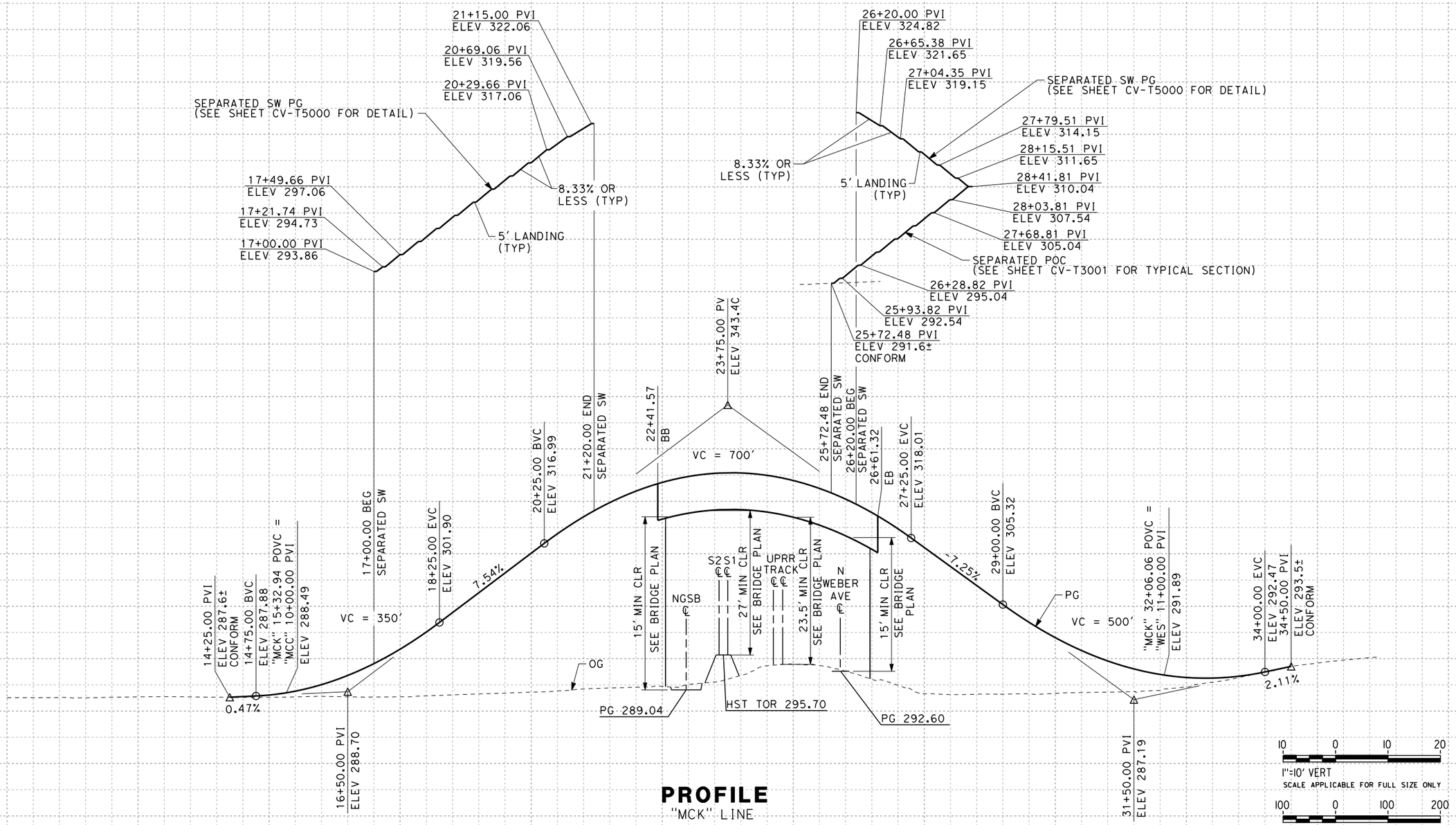

PROFILE
"MCK" LINE

ADDENDUM 3 - RFP HSR 11-16

REV	DATE	BY	CHK	APP	DESCRIPTION
A	2012-06	VO	BR	RP	REVISED FOR ADDENDUM 3

DESIGNED BY J. NETTLETON
DRAWN BY V. ORTEGA
CHECKED BY B. RAWSON
IN CHARGE Q. EARLE
DATE 06/12/12

PROPOSED PRELIMINARY DESIGN

NOT FOR CONSTRUCTION

URS | HMM | ARUP
CALIFORNIA HIGH-SPEED TRAIN

CALIFORNIA HIGH-SPEED RAIL AUTHORITY

CALIFORNIA HIGH-SPEED TRAIN PROJECT
SIERRA SUBDIVISION
PACKAGE 1A
ROADWAY
GRADE SEPARATION PROFILE
W MCKINLEY AVE

CONTRACT NO.
DRAWING NO. CV-T1002-A3
SCALE AS SHOWN
SHEET NO.

06/29/2012 ADDENDUM 3 - RFP HSR 11-16

ort52801 6/12/2012 2:13:10 PM CAHSRP-r1.tbl CHSR_PDF_half_black.pltG:_Sacramento\URS\235413 CA HSR Fresno Palmdale\16.0 Drawings\N-30% RBNSF Fresno\Sheet Files\Civil\Package 1A\S1-CV-T1002-A3.dgn

NOTES:

1. FOR BRIDGE INFORMATION, SEE STRUCTURAL PLANS.

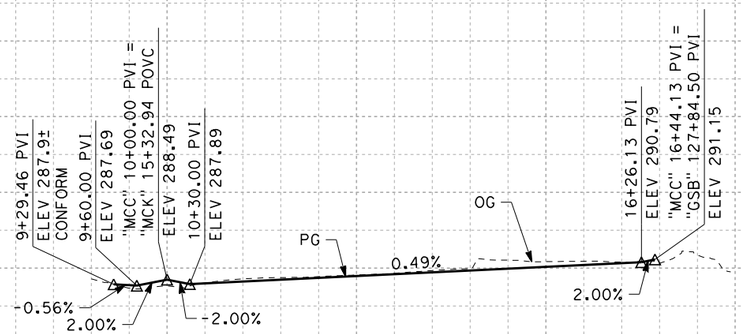

PROFILE
"MCC" LINE

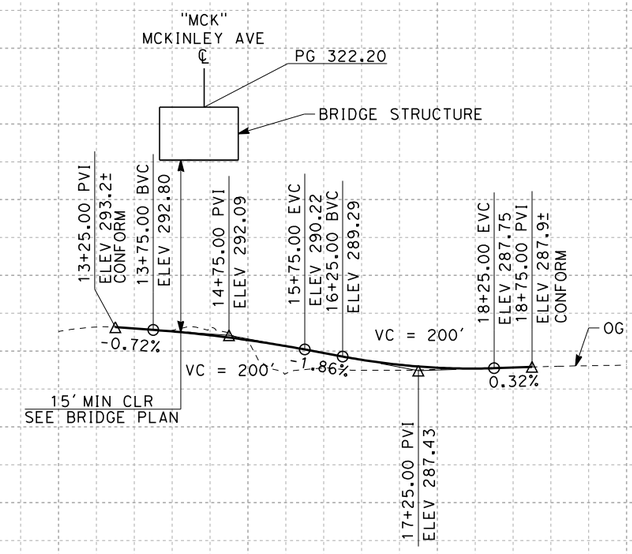

PROFILE
"WEB" LINE

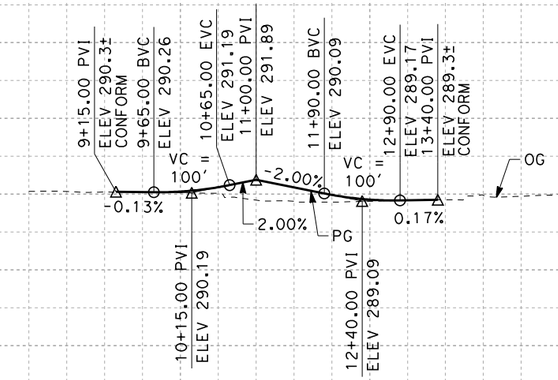

PROFILE
"WES" LINE

10 0 10 20
1"=10′ VERT
SCALE APPLICABLE FOR FULL SIZE ONLY

100 0 100 200
1"=100′ HORIZ
SCALE APPLICABLE FOR FULL SIZE ONLY

ADDENDUM 3 - RFP HSR 11-16

REV	DATE	BY	CHK	APP	DESCRIPTION
A	2012-06	VO	BR	RP	REVISED FOR ADDENDUM 3

DESIGNED BY J. NETTLETON
DRAWN BY V. ORTEGA
CHECKED BY B. RAWSON
IN CHARGE Q. EARLE
DATE 06/12/12

PROPOSED PRELIMINARY DESIGN

NOT FOR CONSTRUCTION

URS | HMM | ARUP
CALIFORNIA HIGH-SPEED TRAIN

CALIFORNIA HIGH-SPEED RAIL AUTHORITY

CALIFORNIA HIGH-SPEED TRAIN PROJECT
SIERRA SUBDIVISION
PACKAGE 1A
ROADWAY
GRADE SEPARATION PROFILE
MCKINLEY AVE CONNECTOR/N WEBER AVE/N WEST AVE

CONTRACT NO.
DRAWING NO. CV-T1003-A3
SCALE AS SHOWN
SHEET NO.

06/29/2012 ADDENDUM 3 - RFP HSR 11-16

NET53329 6/13/2012 10:54:01 AM CAHSRP-r1.tbl CHSR_PDF_half_black.pltG:_Sacramento\URS\235413 CA HSR Fresno Palmdale\16.0 Drawings\N-30% RBNSF Fresno\Sheet Files\Civil\Package 1A\S1-CV-T1003-A3.dgn

ort52801 6/12/2012 2:13:48 PM CAHSRP-r1.tbl CHSR_PDF_half_black.pltG:_Sacramento\URS\235413 CA HSR Fresno Palmdale\16.0 Drawings\N-30% RBNSF Fresno\Sheet Files\Civil\Package 1A\S1-CV-T1004-A3.dgn

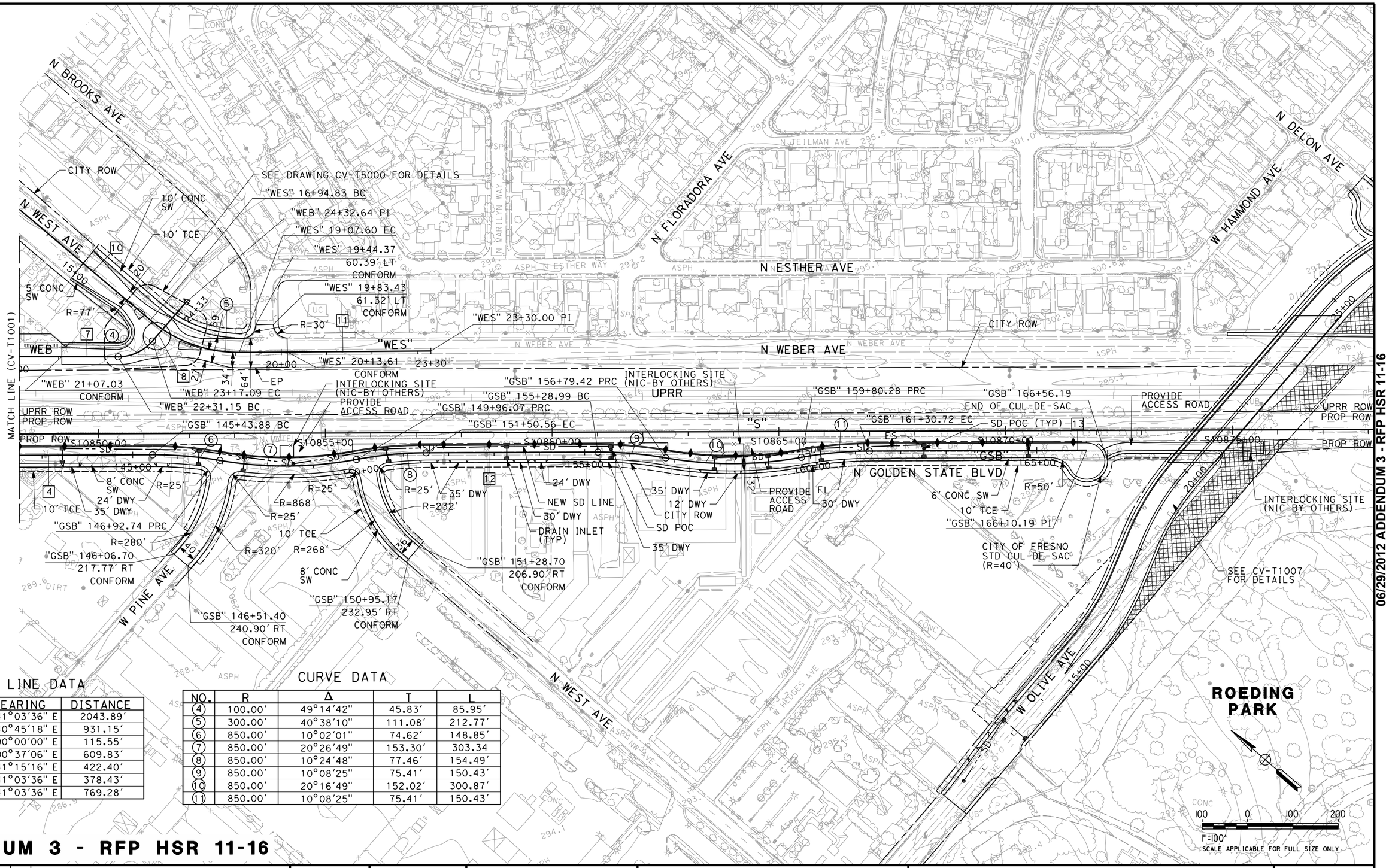

LINE DATA

NO.	BEARING	DISTANCE
4	S 41°03'36" E	2043.89'
7	N 40°45'18" E	931.15'
8	N 90°00'00" E	115.55'
10	S 00°37'06" E	609.83'
11	S 41°15'16" E	422.40'
12	S 41°03'36" E	378.43'
13	S 41°03'36" E	769.28'

CURVE DATA

NO.	R	Δ	T	L
4	100.00'	49°14'42"	45.83'	85.95'
5	300.00'	40°38'10"	111.08'	212.77'
6	850.00'	10°02'01"	74.62'	148.85'
7	850.00'	20°26'49"	153.30'	303.34
8	850.00'	10°24'48"	77.46'	154.49'
9	850.00'	10°08'25"	75.41'	150.43'
10	850.00'	20°16'49"	152.02'	300.87'
11	850.00'	10°08'25"	75.41'	150.43'

ADDENDUM 3 - RFP HSR 11-16

REV	DATE	BY	CHK	APP	DESCRIPTION
A	2012-06	VO	BR	RP	REVISED FOR ADDENDUM 3

DESIGNED BY J. NETTLETON
DRAWN BY V. ORTEGA
CHECKED BY B. RAWSON
IN CHARGE O. EARLE
DATE 06/12/12

PROPOSED PRELIMINARY DESIGN

NOT FOR CONSTRUCTION

URS | HMM | ARUP
CALIFORNIA HIGH-SPEED TRAIN

CALIFORNIA HIGH-SPEED RAIL AUTHORITY

CALIFORNIA HIGH-SPEED TRAIN PROJECT
SIERRA SUBDIVISION
PACKAGE 1A
ROADWAY
GRADE SEPARATION LAYOUT
N GOLDEN STATE BLVD

CONTRACT NO.
DRAWING NO. CV-T1004-A3
SCALE AS SHOWN
SHEET NO.

06/29/2012 ADDENDUM 3 - RFP HSR 11-16

NOTES:

1. FOR BRIDGE INFORMATION, SEE STRUCTURAL PLANS.

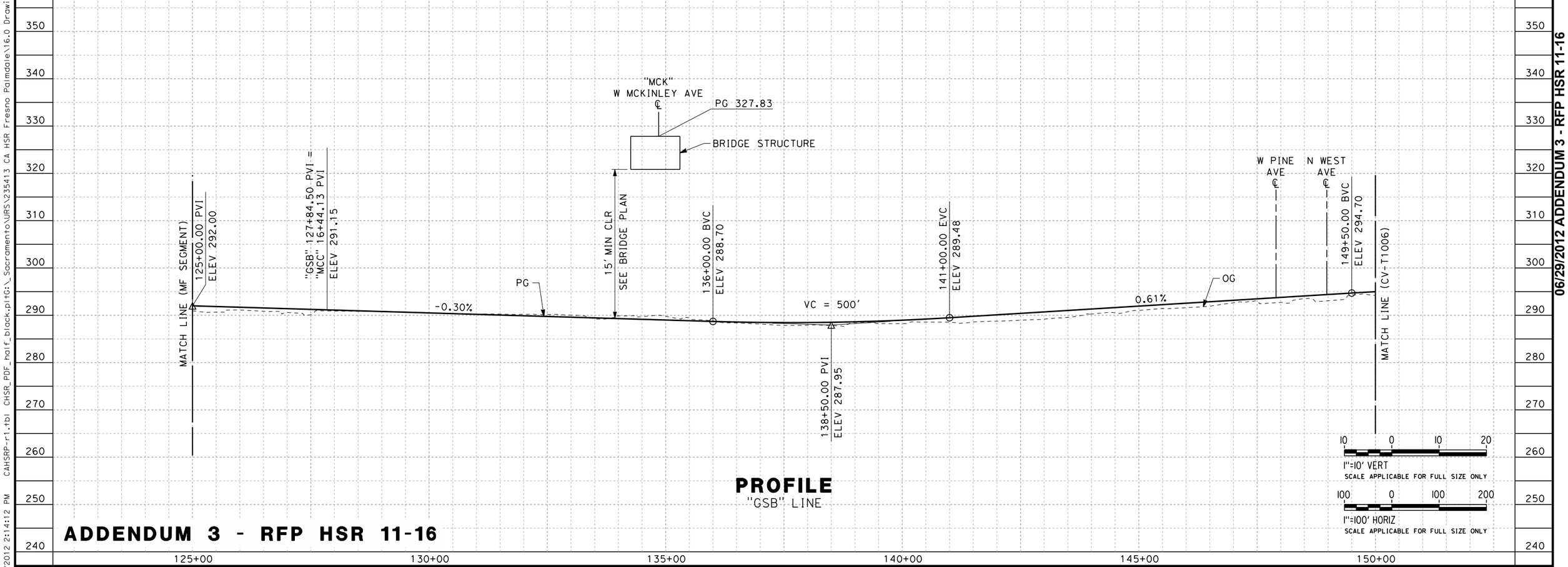

PROFILE

"GSB" LINE

ADDENDUM 3 - RFP HSR 11-16

REV	DATE	BY	CHK	APP	DESCRIPTION
A	2012-06	VO	BR	RP	REVISED FOR ADDENDUM 3

DESIGNED BY J. NETTLETON
DRAWN BY V. ORTEGA
CHECKED BY B. RAWSON
IN CHARGE Q. EARLE
DATE 06/12/12

PROPOSED PRELIMINARY DESIGN

NOT FOR CONSTRUCTION

URS | HMM | ARUP
CALIFORNIA HIGH-SPEED TRAIN

CALIFORNIA HIGH-SPEED RAIL AUTHORITY

CALIFORNIA HIGH-SPEED TRAIN PROJECT
SIERRA SUBDIVISION
PACKAGE 1A
ROADWAY
GRADE SEPARATION PROFILE
N GOLDEN STATE BLVD

CONTRACT NO.
DRAWING NO. CV-T1005-A3
SCALE AS SHOWN
SHEET NO.

06/29/2012 ADDENDUM 3 - RFP HSR 11-16

6/12/2012 2:14:12 PM CAHSRP-r1.tbl CHSR_PDF_half_black.pltG:_Sacramento\URS\235413 CA HSR Fresno Palmdale\16.0 Drawings\N-30% RBNSF Fresno\Sheet Files\Civil\Package 1A\S1-CV-T1005-A3.dgn
ort52801

or152801 6/12/2012 2:14:28 PM CAHSRP-r1.tbl CHSR_PDF_half_black.pltG:_Sacramento\URS\235413 CA HSR Fresno Palmdale\16.0 Drawings\N-30% RBNSF Fresno\Sheet Files\Civil\Package 1A\S1-CV-T1006-A3.dgn

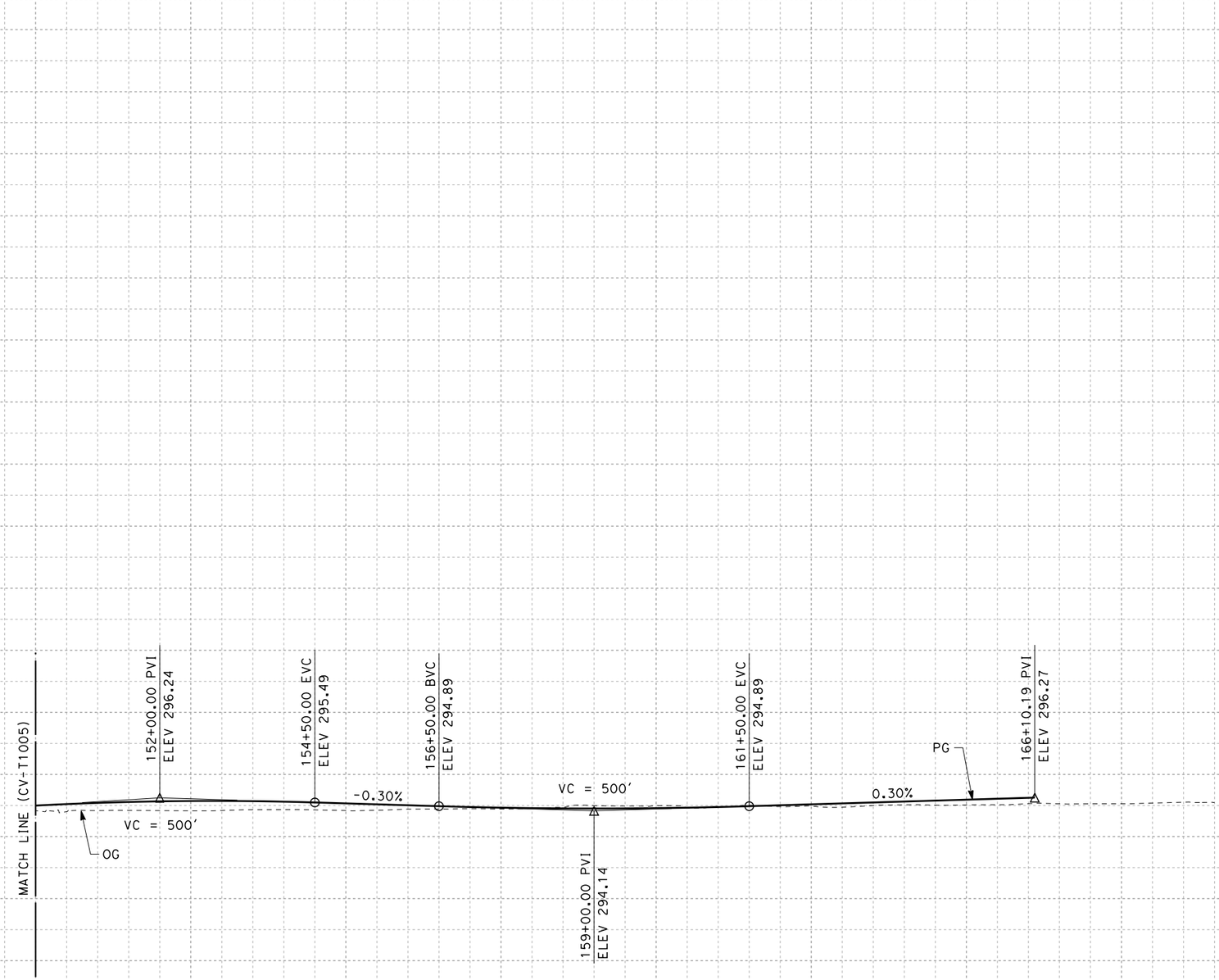

PROFILE

"GSB" LINE

10 0 10 20
1"=10' VERT
SCALE APPLICABLE FOR FULL SIZE ONLY

100 0 100 200
1"=100' HORIZ
SCALE APPLICABLE FOR FULL SIZE ONLY

350 340 330 320 310 300 290 280 270 260 250 240

150+00 155+00 160+00 165+00 170+00

ADDENDUM 3 - RFP HSR 11-16

06/29/2012 ADDENDUM 3 - RFP HSR 11-16

REV	DATE	BY	CHK	APP	DESCRIPTION
A	2012-06	VO	BR	RP	REVISED FOR ADDENDUM 3

DESIGNED BY J. NETTLETON
DRAWN BY V. ORTEGA
CHECKED BY B. RAWSON
IN CHARGE Q. EARLE
DATE 06/12/12

PROPOSED PRELIMINARY DESIGN

NOT FOR CONSTRUCTION

URS | HMM | ARUP
CALIFORNIA HIGH-SPEED TRAIN

CALIFORNIA HIGH-SPEED RAIL AUTHORITY

CALIFORNIA HIGH-SPEED TRAIN PROJECT
SIERRA SUBDIVISION
PACKAGE 1A
ROADWAY
GRADE SEPARATION PROFILE
N GOLDEN STATE BLVD

CONTRACT NO.
DRAWING NO. CV-T1006-A3
SCALE AS SHOWN
SHEET NO.

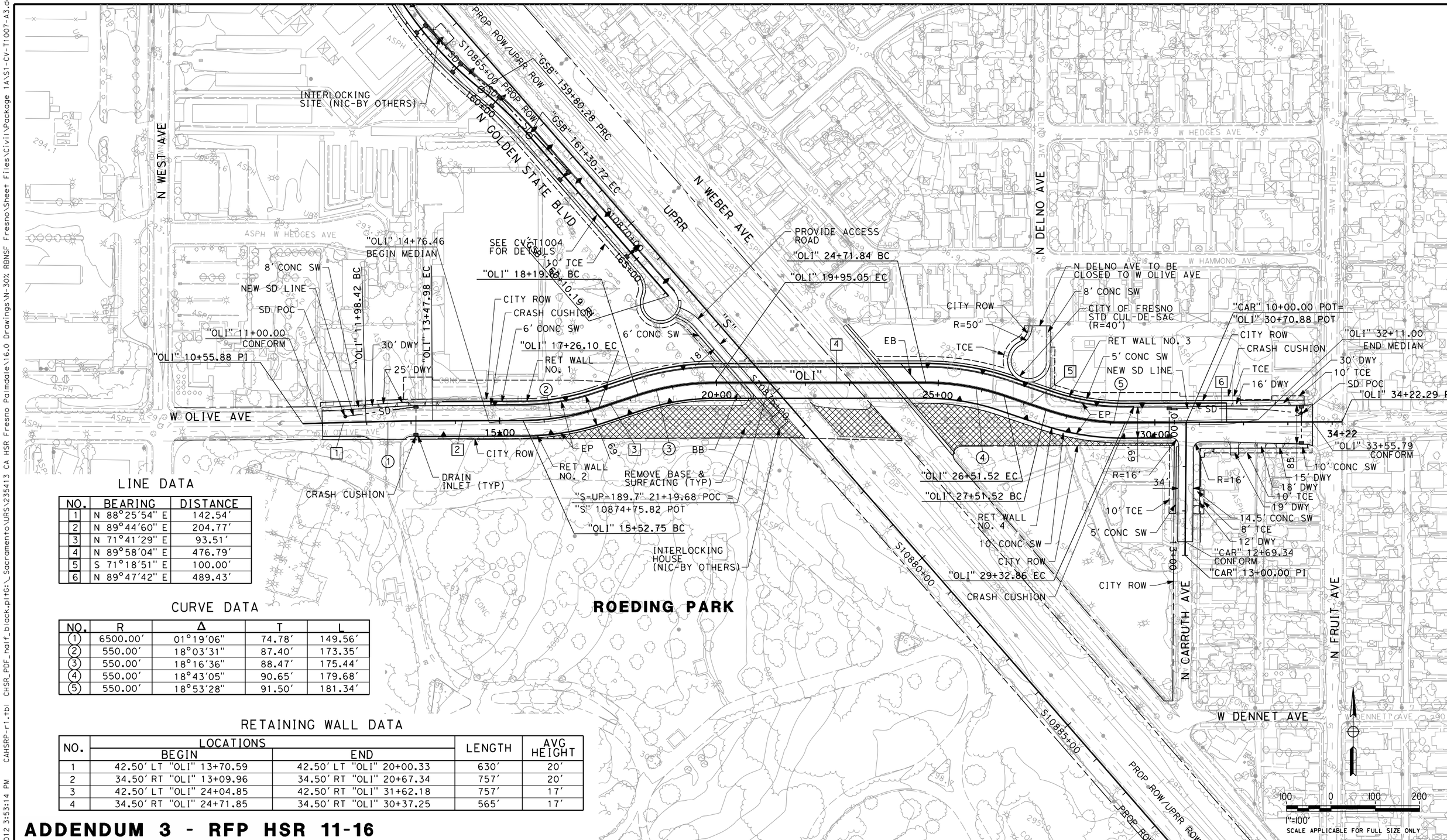

LINE DATA

NO.	BEARING	DISTANCE
1	N 88°25'54" E	142.54'
2	N 89°44'60" E	204.77'
3	N 71°41'29" E	93.51'
4	N 89°58'04" E	476.79'
5	S 71°18'51" E	100.00'
6	N 89°47'42" E	489.43'

CURVE DATA

NO.	R	Δ	T	L
1	6500.00'	01°19'06"	74.78'	149.56'
2	550.00'	18°03'31"	87.40'	173.35'
3	550.00'	18°16'36"	88.47'	175.44'
4	550.00'	18°43'05"	90.65'	179.68'
5	550.00'	18°53'28"	91.50'	181.34'

RETAINING WALL DATA

NO.	LOCATIONS BEGIN	LOCATIONS END	LENGTH	AVG HEIGHT
1	42.50' LT "OLI" 13+70.59	42.50' LT "OLI" 20+00.33	630'	20'
2	34.50' RT "OLI" 13+09.96	34.50' RT "OLI" 20+67.34	757'	20'
3	42.50' LT "OLI" 24+04.85	42.50' RT "OLI" 31+62.18	757'	17'
4	34.50' RT "OLI" 24+71.85	34.50' RT "OLI" 30+37.25	565'	17'

ADDENDUM 3 - RFP HSR 11-16

REV	DATE	BY	CHK	APP	DESCRIPTION
A	2012-06	VO	BR	RP	REVISED FOR ADDENDUM 3

DESIGNED BY I. JOSIFEK
DRAWN BY V. ORTEGA
CHECKED BY B. RAWSON
IN CHARGE O. EARLE
DATE 06/12/12

PROPOSED PRELIMINARY DESIGN

NOT FOR CONSTRUCTION

URS | HMM | ARUP
CALIFORNIA HIGH-SPEED TRAIN

CALIFORNIA HIGH-SPEED RAIL AUTHORITY

CALIFORNIA HIGH-SPEED TRAIN PROJECT
SIERRA SUBDIVISION
PACKAGE 1A
ROADWAY
GRADE SEPARATION LAYOUT
W OLIVE AVE

CONTRACT NO.
DRAWING NO. CV-T1007-A3
SCALE AS SHOWN
SHEET NO.

06/29/2012 ADDENDUM 3 - RFP HSR 11-16

ort52801 6/12/2012 3:53:14 PM CAHSRP-r1.tbl CHSR_PDF_half_black.pltG:_Sacramento\URS\235413 CA HSR Fresno Palmdale\16.0 Drawings\N-30% RBNSF Fresno\Sheet Files\Civil\Package 1A\S1-CV-T1007-A3.dgn

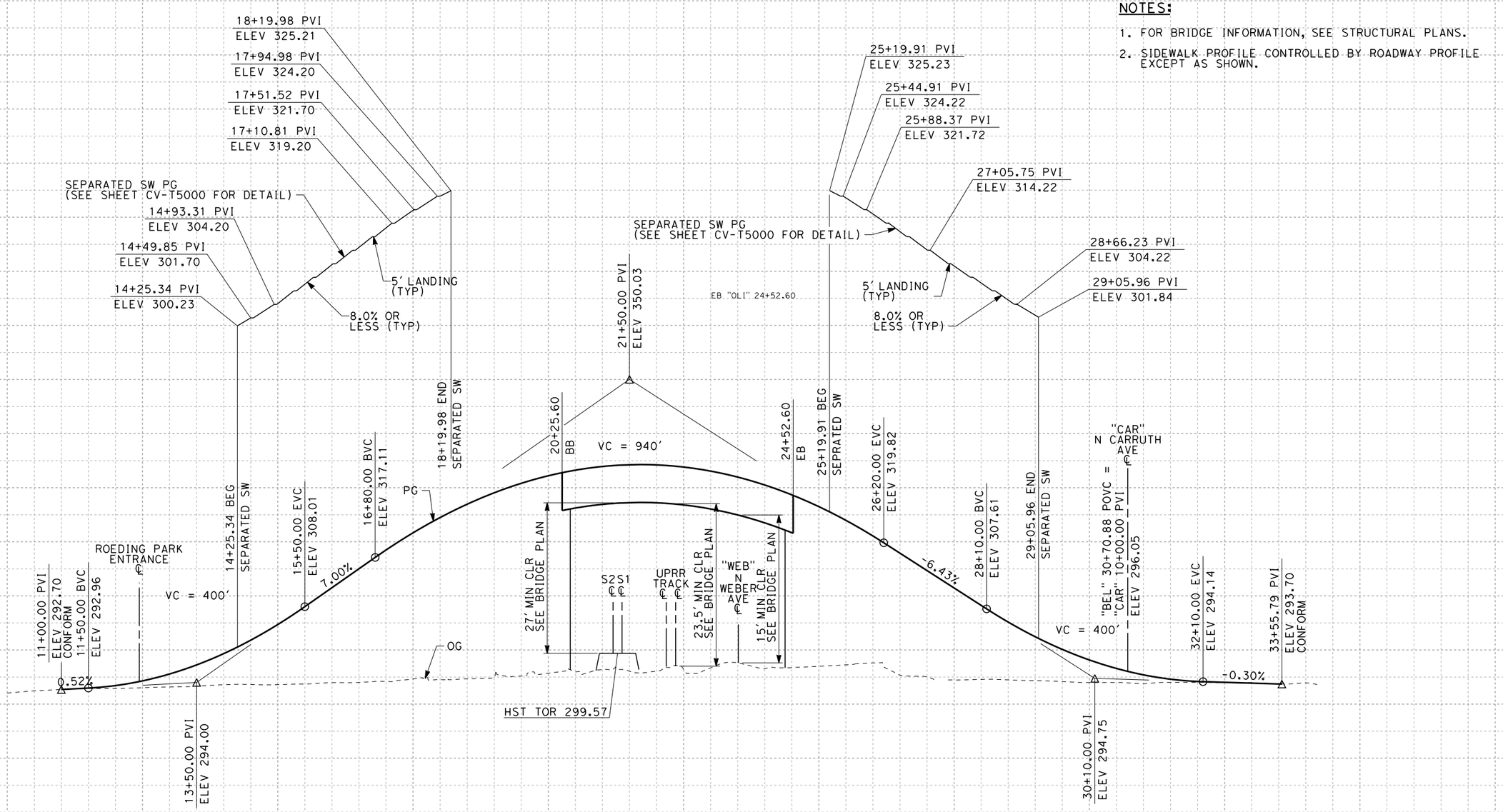

NOTES:

1. FOR BRIDGE INFORMATION, SEE STRUCTURAL PLANS.
2. SIDEWALK PROFILE CONTROLLED BY ROADWAY PROFILE EXCEPT AS SHOWN.

PROFILE

"OLI" LINE

ADDENDUM 3 - RFP HSR 11-16

06/29/2012 ADDENDUM 3 - RFP HSR 11-16

REV	DATE	BY	CHK	APP	DESCRIPTION
A	2012-06	VO	BR	RP	REVISED FOR ADDENDUM 3

DESIGNED BY I. JOSIFEK
DRAWN BY V. ORTEGA
CHECKED BY B. RAWSON
IN CHARGE O. EARLE
DATE 06/12/12

PROPOSED PRELIMINARY DESIGN

NOT FOR CONSTRUCTION

URS | HMM | ARUP
CALIFORNIA HIGH-SPEED TRAIN

CALIFORNIA HIGH-SPEED RAIL AUTHORITY

CALIFORNIA HIGH-SPEED TRAIN PROJECT
SIERRA SUBDIVISION
PACKAGE 1A
ROADWAY
GRADE SEPARATION PROFILE
W OLIVE AVE

CONTRACT NO.
DRAWING NO. CV-T1008-A3
SCALE AS SHOWN
SHEET NO.

6/12/2012 2:17:06 PM CAHSRP-r1.tbl CHSR_PDF_half_black.pltG:_Sacramento\URS\235413 CA HSR Fresno Palmdale\16.0 Drawings\N-30% RBNSF Fresno\Sheet Files\Civil\Package 1A\S1-CV-T1008-A3.dgn
ort52801

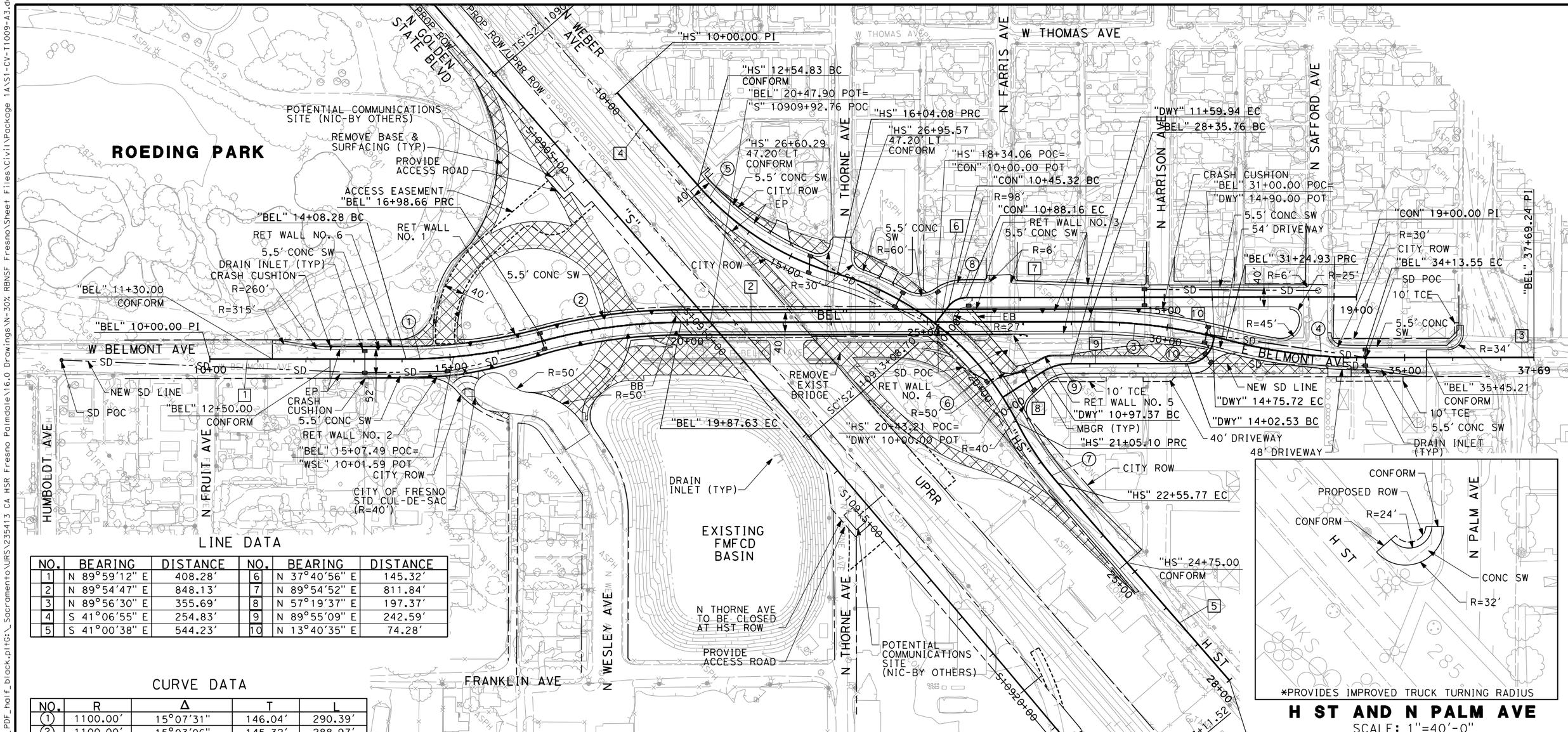

H ST AND N PALM AVE

SCALE: 1"=40'-0"

LINE DATA

NO.	BEARING	DISTANCE	NO.	BEARING	DISTANCE
1	N 89°59'12" E	408.28'	6	N 37°40'56" E	145.32'
2	N 89°54'47" E	848.13'	7	N 89°54'52" E	811.84'
3	N 89°56'30" E	355.69'	8	N 57°19'37" E	197.37'
4	S 41°06'55" E	254.83'	9	N 89°55'09" E	242.59'
5	S 41°00'38" E	544.23'	10	N 13°40'35" E	74.28'

CURVE DATA

NO.	R	Δ	T	L
1	1100.00'	15°07'31"	146.04'	290.39'
2	1100.00'	15°03'06"	145.32'	288.97'
3	1100.00'	15°03'44"	145.43'	289.17'
4	1100.00'	15°02'01"	145.15'	288.63'
5	610.00'	32°48'15"	179.56'	349.25'
6	610.00'	47°03'37"	55.76'	501.03'
7	610.00'	14°09'05"	75.72'	150.66'
8	47.00'	52°13'56"	23.04'	42.85'
9	110.00'	32°35'32"	32.16'	62.57'
10	55.00'	76°14'34"	43.16'	73.19'

RETAINING WALL DATA

NO.	LOCATIONS BEGIN	LOCATIONS END	LENGTH	AVG HEIGHT
1	122.39' LT "BEL" 15+44.91	25.50' LT "BEL" 19+76.28	555'	14'
2	39.00' RT "BEL" 13+22.96	25.50' RT "BEL" 20+22.44	702'	11'
3	25.50' LT "BEL" 25+80.83	35.50' LT "BEL" 29+82.30	406'	13'
4	57.00' LT "HS" 19+27.79	45.50' LT "HS" 20+01.60	87'	10'
5	24.00' LT "DWY" 10+95.91	16.00' LT "DWY" 11+58.32	76'	7'
6	25.50' LT "BEL" 12+50.00	125.08' LT "BEL" 14+84.21	311'	3'

100 0 100 200

1"=100'

SCALE APPLICABLE FOR FULL SIZE ONLY

ADDENDUM 3 - RFP HSR 11-16

REV	DATE	BY	CHK	APP	DESCRIPTION
A	2012-06	VO	BR	RP	REVISED FOR ADDENDUM 3

DESIGNED BY I. JOSIFEK
DRAWN BY V. ORTEGA
CHECKED BY B. RAWSON
IN CHARGE O. EARLE
DATE 06/12/12

PROPOSED PRELIMINARY DESIGN

NOT FOR CONSTRUCTION

URS | HMM | ARUP
CALIFORNIA HIGH-SPEED TRAIN

CALIFORNIA HIGH-SPEED RAIL AUTHORITY

CALIFORNIA HIGH-SPEED TRAIN PROJECT
SIERRA SUBDIVISION
PACKAGE 1A
ROADWAY
GRADE SEPARATION LAYOUT
BELMONT AVE

CONTRACT NO.
DRAWING NO. CV-T1009-A3
SCALE AS SHOWN
SHEET NO.

06/29/2012 ADDENDUM 3 - RFP HSR 11-16

ort52801 6/12/2012 2:17:26 PM CAHSRP-r1.tbl CHSR_PDF_half_black.pltG:_Sacramento\URS\235413 CA HSR Fresno Palmdale\16.0 Drawings\N-30% RBNSF Fresno\Sheet Files\Civil\Package 1A\S1-CV-T1009-A3.dgn

NOTES:

1. FOR BRIDGE INFORMATION, SEE STRUCTURAL PLANS.

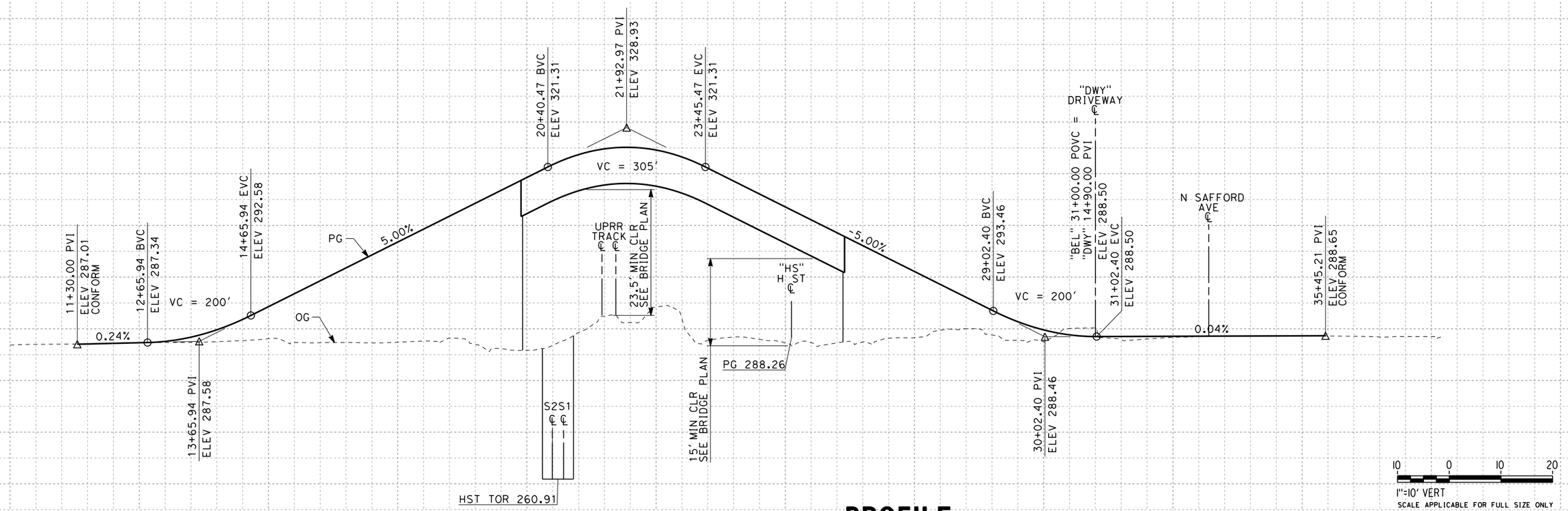

PROFILE

"BEL" LINE

1"=10' VERT
SCALE APPLICABLE FOR FULL SIZE ONLY

1"=100' HORIZ
SCALE APPLICABLE FOR FULL SIZE ONLY

ADDENDUM 3 - RFP HSR 11-16

06/29/2012 ADDENDUM 3 - RFP HSR 11-16

REV	DATE	BY	CHK	APP	DESCRIPTION
A	2012-06	VO	BR	RP	REVISED FOR ADDENDUM 3

DESIGNED BY I. JOSIFEK
DRAWN BY V. ORTEGA
CHECKED BY B. RAWSON
IN CHARGE O. EARLE
DATE 06/12/12

PROPOSED PRELIMINARY DESIGN

NOT FOR CONSTRUCTION

URS | HMM | ARUP
CALIFORNIA HIGH-SPEED TRAIN

CALIFORNIA HIGH-SPEED RAIL AUTHORITY

CALIFORNIA HIGH-SPEED TRAIN PROJECT
SIERRA SUBDIVISION
PACKAGE 1A
ROADWAY
GRADE SEPARATION PROFILE
BELMONT AVE

CONTRACT NO.
DRAWING NO. CV-T1010-A3
SCALE AS SHOWN
SHEET NO.

CAHSRP-r1.tbl CHSR_PDF_half_black.pltG:_Sacramento\URS\235413 CA HSR Fresno Palmdale\16.0 Drawings\N-30% RBNSF Fresno\Sheet Files\Civil\Package 1A\S1-CV-T1010-A3.dgn
6/12/2012 2:18:33 PM
ort52801

NOTES:

1. FOR BRIDGE INFORMATION, SEE STRUCTURAL PLANS.

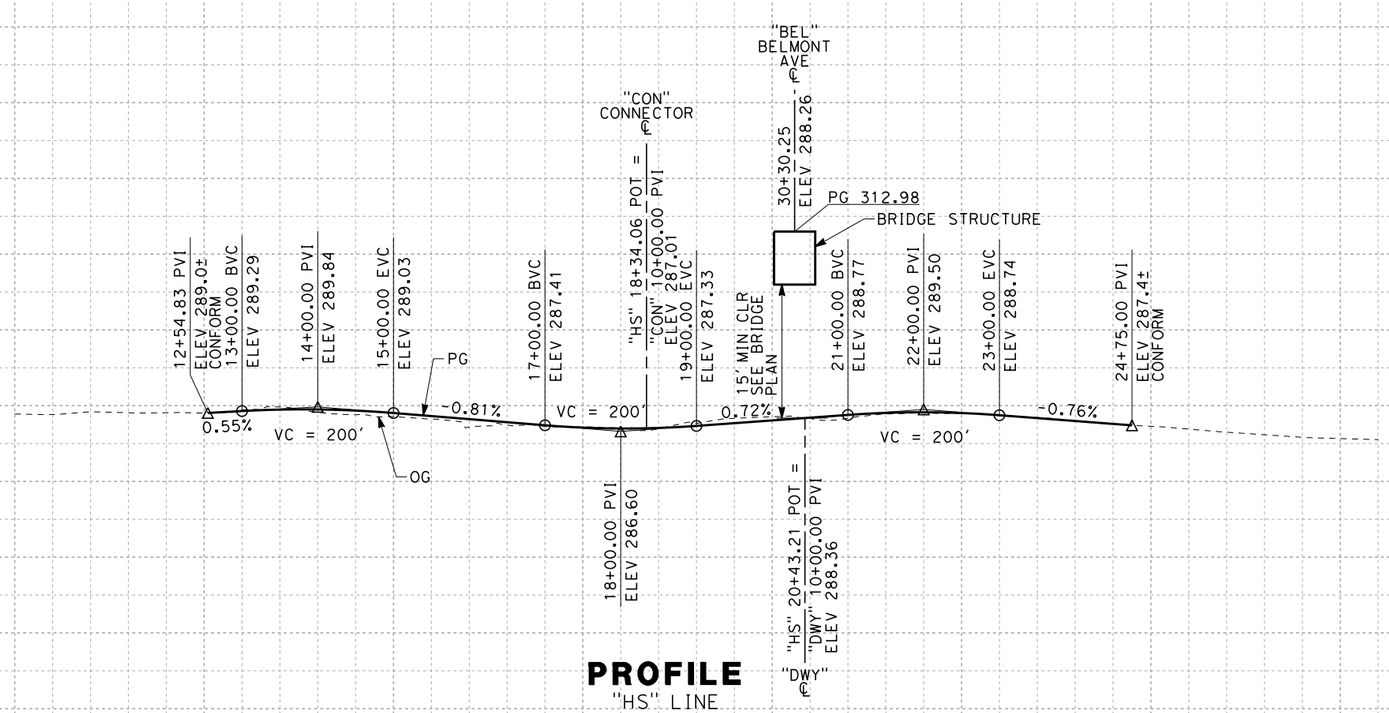

PROFILE
"HS" LINE

10 0 10 20
1"=10' VERT
SCALE APPLICABLE FOR FULL SIZE ONLY

100 0 100 200
1"=100' HORIZ
SCALE APPLICABLE FOR FULL SIZE ONLY

ADDENDUM 3 - RFP HSR 11-16

REV	DATE	BY	CHK	APP	DESCRIPTION
A	2012-06	VO	BR	RP	REVISED FOR ADDENDUM 3

DESIGNED BY I. JOSIFEK
DRAWN BY V. ORTEGA
CHECKED BY B. RAWSON
IN CHARGE O. EARLE
DATE 06/12/12

PROPOSED PRELIMINARY DESIGN

NOT FOR CONSTRUCTION

URS | HMM | ARUP
CALIFORNIA HIGH-SPEED TRAIN

CALIFORNIA HIGH-SPEED RAIL AUTHORITY

CALIFORNIA HIGH-SPEED TRAIN PROJECT
SIERRA SUBDIVISION
PACKAGE 1A
ROADWAY
GRADE SEPARATION PROFILE
N H ST

CONTRACT NO.
DRAWING NO. CV-T1011-A3
SCALE AS SHOWN
SHEET NO.

06/29/2012 ADDENDUM 3 - RFP HSR 11-16

6/12/2012 2:19:08 PM CAHSRP-r1.tbl CHSR_PDF_half_black.pltG:_Sacramento\URS\235413 CA HSR Fresno Palmdale\16.0 Drawings\N-30% RBNSF Fresno\Sheet Files\Civil\Package 1A\S1-CV-T1011-A3.dgn
ort52801

NOTES:

1. FOR BRIDGE INFORMATION, SEE STRUCTURAL PLANS.

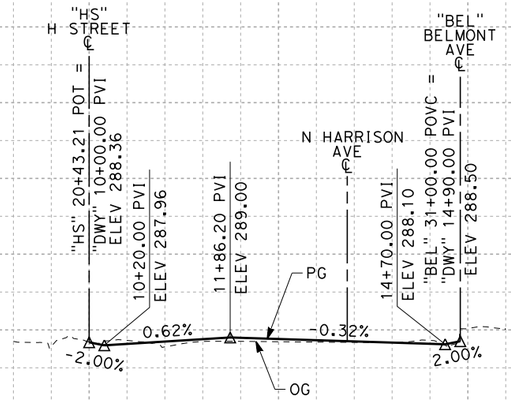

PROFILE
"DWY" LINE

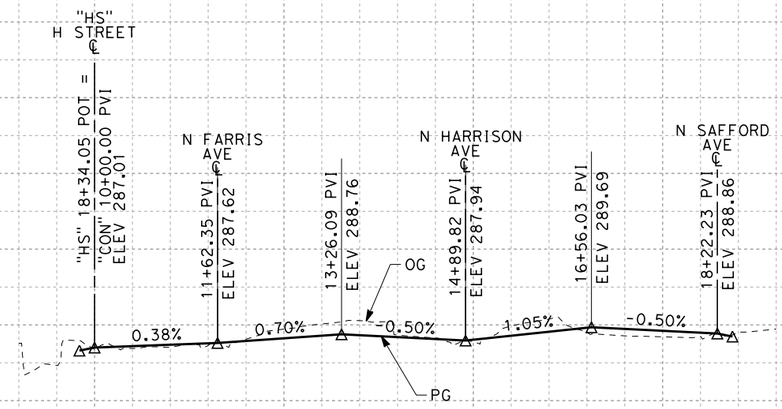

PROFILE
"CON" LINE

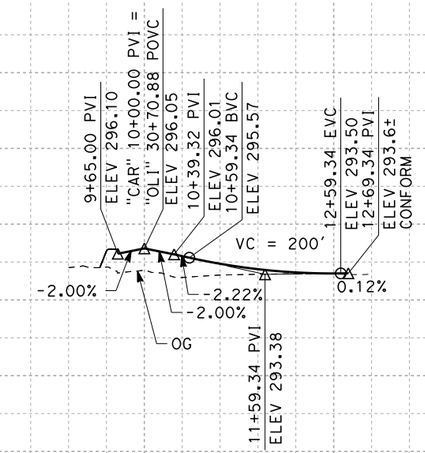

PROFILE
"CAR" LINE

10 0 10 20
1"=10' VERT
SCALE APPLICABLE FOR FULL SIZE ONLY

100 0 100 200
1"=100' HORIZ
SCALE APPLICABLE FOR FULL SIZE ONLY

ADDENDUM 3 - RFP HSR 11-16

REV	DATE	BY	CHK	APP	DESCRIPTION
A	2012-06	VO	BR	RP	REVISED FOR ADDENDUM 3

DESIGNED BY I. JOSIFEK
DRAWN BY V. ORTEGA
CHECKED BY B. RAWSON
IN CHARGE Q. EARLE
DATE 06/12/12

PROPOSED PRELIMINARY DESIGN

NOT FOR CONSTRUCTION

URS | HMM | ARUP
CALIFORNIA HIGH-SPEED TRAIN

CALIFORNIA HIGH-SPEED RAIL AUTHORITY

CALIFORNIA HIGH-SPEED TRAIN PROJECT
SIERRA SUBDIVISION
PACKAGE 1A
ROADWAY
GRADE SEPARATION PROFILE
N CARUTH AVE/CONNECTOR/DRIVEWAY

CONTRACT NO.
DRAWING NO. CV-T1012-A3
SCALE AS SHOWN
SHEET NO.

06/29/2012 ADDENDUM 3 - RFP HSR 11-16

or152801 6/12/2012 2:19:36 PM CAHSRP-r1.tbl CHSR_PDF_half_black.pltG:_Sacramento\URS\235413 CA HSR Fresno Palmdale\16.0 Drawings\N-30% RBNSF Fresno\Sheet Files\Civil\Package 1A\S1-CV-T1012-A3.dgn

"MCK" 25+95.30 TO 28+15.30

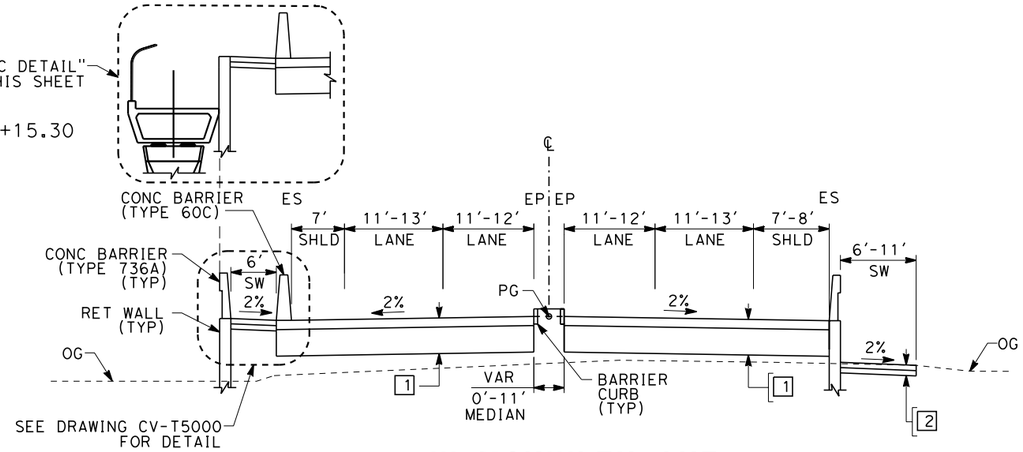

W MCKINLEY AVE

"MCK" 18+23.08 TO 22+41.57
"MCK" 26+61.32 TO 28+13.80

"MCK" 28+13.80 TO 30+70.00

"MCK" 17+00.00 TO 18+23.08

"MCK" 15+73.32 TO 17+00.00

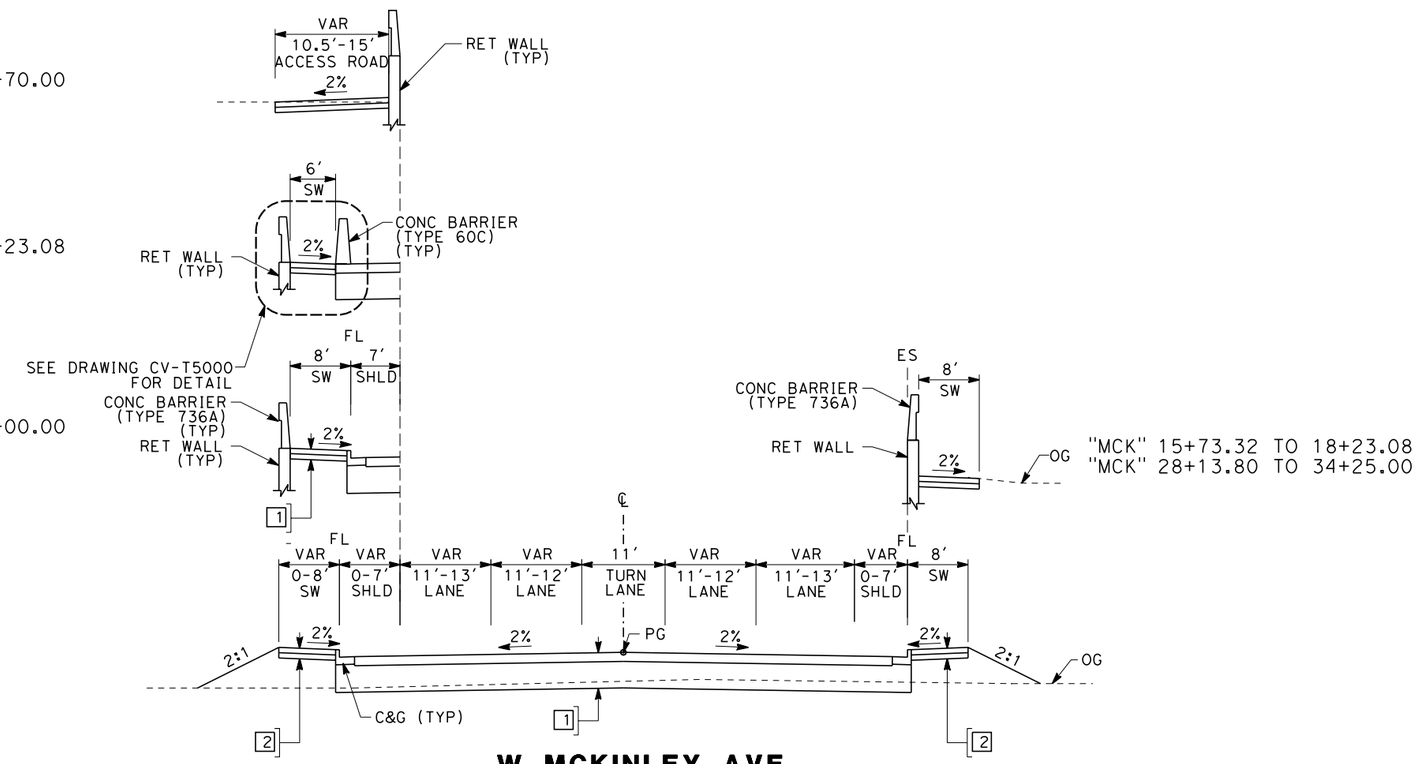

W MCKINLEY AVE

"MCK" 14+25.00 TO 18+23.08
"MCK" 28+13.80 TO 34+25.00*

NOTES:

1. SUPERELEVATION AS SHOWN OR AS DIRECTED BY THE ENGINEER.
2. PAVEMENT SECTIONS ARE SHOWN FOR INFORMATIONAL PURPOSES ONLY.

DESIGN SPEED TABLE

STREET NAME	ALIGNMENT DESIGNATION	DESIGN SPEED (MPH)
W MCKINLEY AVE	MCK	35
W OLIVE AVE	OLI	35
BELMONT AVE	BEL	30
MCKINLEY AVE CONNECTOR	MCC	30
N GOLDEN STATE BLVD	GSB	50
N WEBER AVE	WEB	40
N H ST	HS	35
DRIVEWAY	DWY	<20
N WEST AVE	WES	30
N CARUTH AVE	CAR	30
CONNECTOR	CON	30

STRUCTURAL SECTIONS
TYPICAL ROADWAY

1 — 0.50' HMA (TYPE A)
1.50' CL2 AB

2 — 0.35' PCC
0.35' CL2 AB

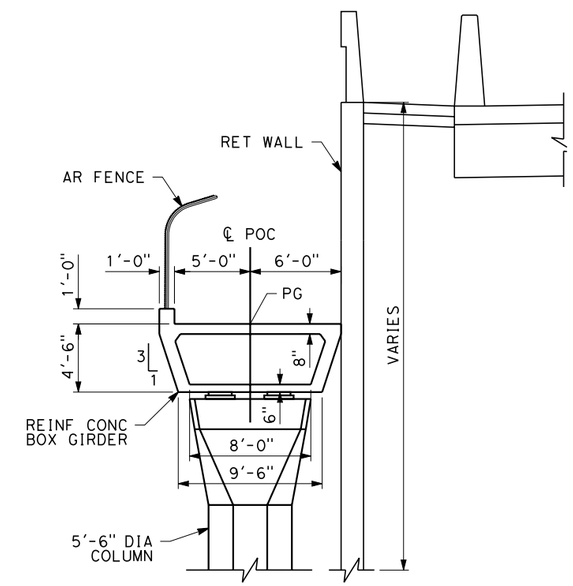

POC DETAIL

NO SCALE

*PROVIDE E.B. RIGHT TURN LANE FROM STA 30+50.00 TO 31+39.23

10 0 10 20
1"=10'
SCALE APPLICABLE FOR FULL SIZE ONLY

ADDENDUM 3 - RFP HSR 11-16

REV	DATE	BY	CHK	APP	DESCRIPTION
A	2012-06	VO	BR	RP	REVISED FOR ADDENDUM 3

DESIGNED BY I. JOSIFEK
DRAWN BY V. ORTEGA
CHECKED BY B. RAWSON
IN CHARGE Q. EARLE
DATE 06/12/12

PROPOSED PRELIMINARY DESIGN

NOT FOR CONSTRUCTION

URS | HMM | ARUP
CALIFORNIA HIGH-SPEED TRAIN

CALIFORNIA HIGH-SPEED RAIL AUTHORITY

CALIFORNIA HIGH-SPEED TRAIN PROJECT
SIERRA SUBDIVISION
PACKAGE 1A
ROADWAY
ROADWAY / GRADE SEPARATION
TYPICAL SECTIONS

CONTRACT NO.
DRAWING NO. CV-T3001-A3
SCALE AS SHOWN
SHEET NO.

06/29/2012 ADDENDUM 3 - RFP HSR 11-16

ort52801 6/12/2012 3:34:35 PM CAHSRP-r1.tbl CHSR_PDF_half_black.pltG:_Sacramento\URS\235413 CA HSR Fresno Palmdale\16.0 Drawings\N-30% RBNSF Fresno\Sheet Files\Civil\Package 1A\S1-CV-T3001-A3.dgn

STRUCTURAL SECTIONS
TYPICAL ROADWAY

1 — 0.50' HMA (TYPE A)
1.50' CL2 AB

2 — 0.35' PCC
0.35' CL2 AB

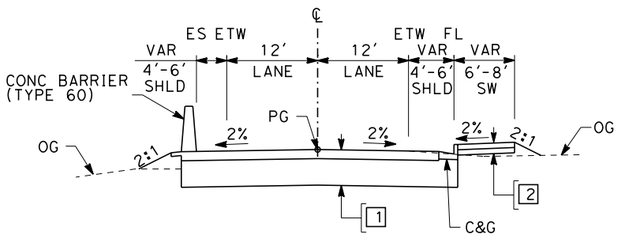

N GOLDEN STATE BLVD
"GSB" 125+00.00 TO 165+30.59

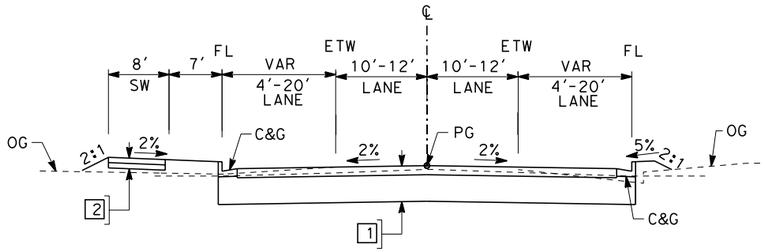

N WEBER AVE
"WEB" 21+07.03 TO 23+50.54

"WES" 16+92.57 TO 20+13.60

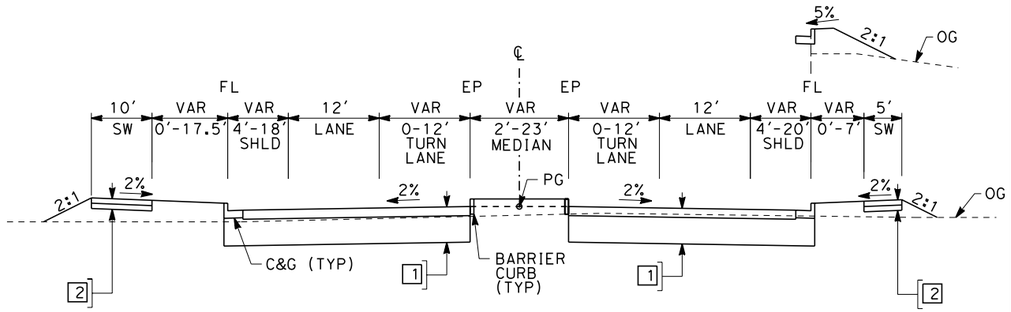

N WEST AVE
"WES" 15+00.00 TO 20+13.60

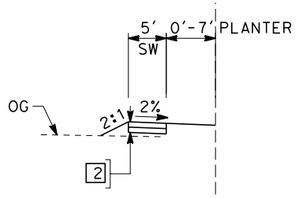

"WEB" 13+95.29 TO 17+97.15

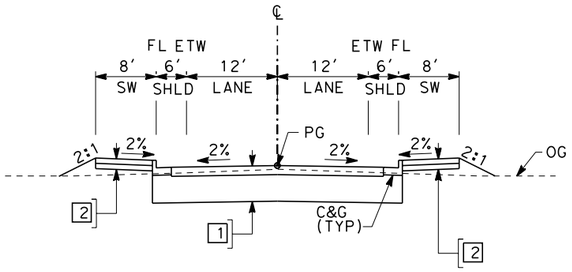

MCKINLEY AVE CONNECTOR
"MCC" 9+29.46 TO 16+26.15

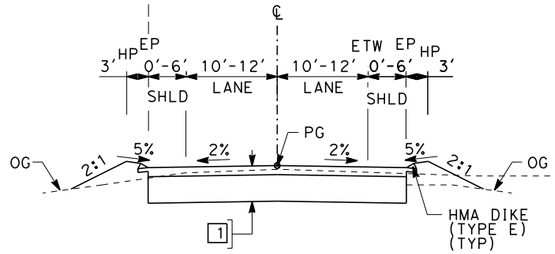

N WEBER AVE
"WEB" 13+25.00 TO 18+75.00

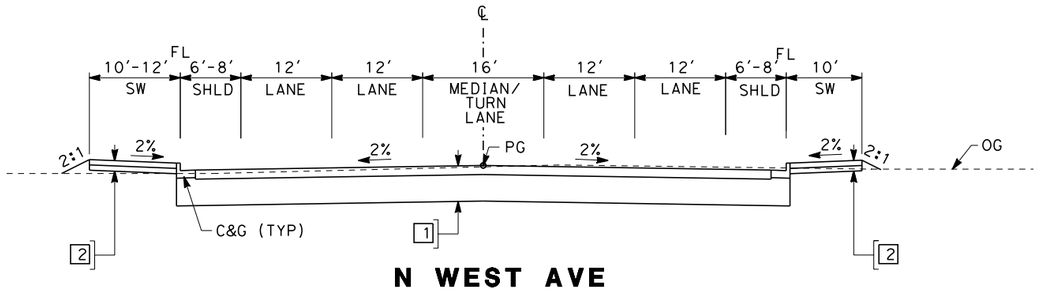

N WEST AVE
"WES" 9+00.00 TO 13+50.00

10 0 10 20
1"=10'
SCALE APPLICABLE FOR FULL SIZE ONLY

ADDENDUM 3 - RFP HSR 11-16

REV	DATE	BY	CHK	APP	DESCRIPTION
A	2012-06	VO	BR	RP	REVISED FOR ADDENDUM 3

DESIGNED BY I. JOSIFEK
DRAWN BY V. ORTEGA
CHECKED BY B. RAWSON
IN CHARGE Q. EARLE
DATE 06/12/12

PROPOSED PRELIMINARY DESIGN

NOT FOR CONSTRUCTION

URS | HMM | ARUP
CALIFORNIA HIGH-SPEED TRAIN

CALIFORNIA HIGH-SPEED RAIL AUTHORITY

CALIFORNIA HIGH-SPEED TRAIN PROJECT
SIERRA SUBDIVISION
PACKAGE 1A
ROADWAY
ROADWAY / GRADE SEPARATION
TYPICAL SECTIONS

CONTRACT NO.
DRAWING NO. CV-T3002-A3
SCALE AS SHOWN
SHEET NO.

06/29/2012 ADDENDUM 3 - RFP HSR 11-16

CHSR_PDF_half_black.pltG:_Sacramento\URS\235413 CA HSR Fresno Palmdale\16.0 Drawings\N-30% RBNSF Fresno\Sheet Files\Civil\Package 1A\S1-CV-T3002-A3.dgn
6/12/2012 3:38:50 PM
ort52801

STRUCTURAL SECTIONS
TYPICAL ROADWAY

1 — 0.50' HMA (TYPE A)
1.50' CL2 AB

2 — 0.35' PCC
0.35' CL2 AB

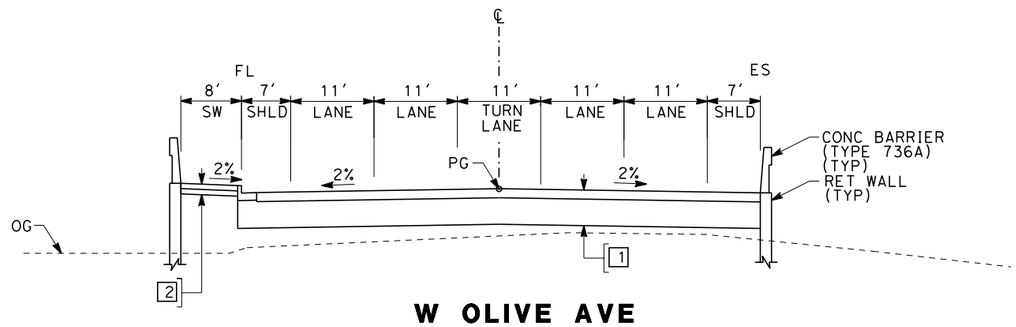

W OLIVE AVE
"OLI" 13+09.74 TO 14+80.14

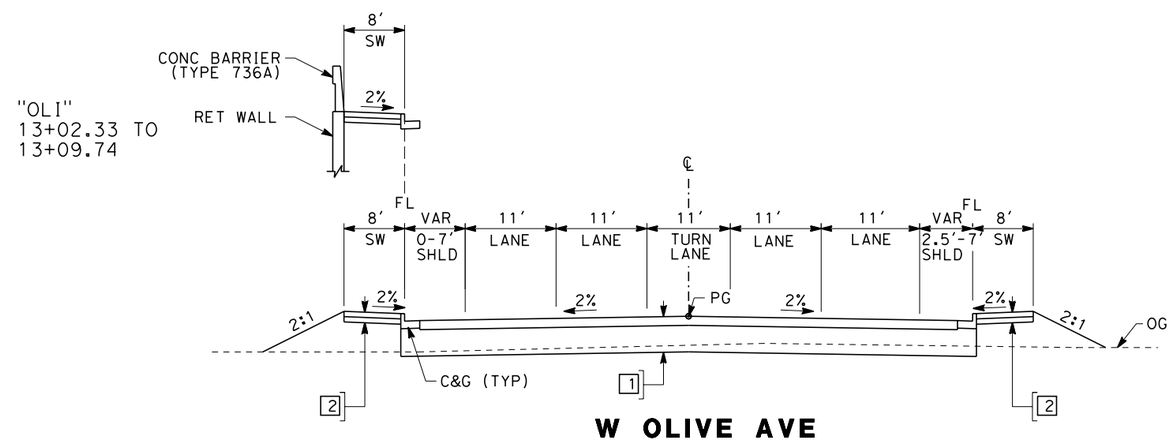

W OLIVE AVE
"OLI" 11+00.00 TO 13+09.74

10 0 10 20
1"=10'
SCALE APPLICABLE FOR FULL SIZE ONLY

ADDENDUM 3 - RFP HSR 11-16

REV	DATE	BY	CHK	APP	DESCRIPTION
A	2012-06	VO	BR	RP	REVISED FOR ADDENDUM 3

DESIGNED BY I. JOSIFEK
DRAWN BY V. ORTEGA
CHECKED BY B. RAWSON
IN CHARGE O. EARLE
DATE 06/12/12

PROPOSED PRELIMINARY DESIGN

NOT FOR CONSTRUCTION

URS | HMM | ARUP
CALIFORNIA HIGH-SPEED TRAIN

CALIFORNIA HIGH-SPEED RAIL AUTHORITY

CALIFORNIA HIGH-SPEED TRAIN PROJECT
SIERRA SUBDIVISION
PACKAGE 1A
ROADWAY
ROADWAY / GRADE SEPARATION
TYPICAL SECTIONS

CONTRACT NO.
DRAWING NO. CV-T3003-A3
SCALE AS SHOWN
SHEET NO.

06/29/2012 ADDENDUM 3 - RFP HSR 11-16

CHSR_PDF_half_black.pltG:_Sacramento\URS\235413 CA HSR Fresno Palmdale\16.0 Drawings\N-30% RBNSF Fresno\Sheet Files\Civil\Package 1A\S1-CV-T3003-A3.dgn
6/12/2012 3:39:43 PM
ort52801

STRUCTURAL SECTIONS
TYPICAL ROADWAY

1 — 0.50' HMA (TYPE A)
1.50' CL2 AB

2 — 0.35' PCC
0.35' CL2 AB

"OLI" 30+37.24 TO 31+62.18

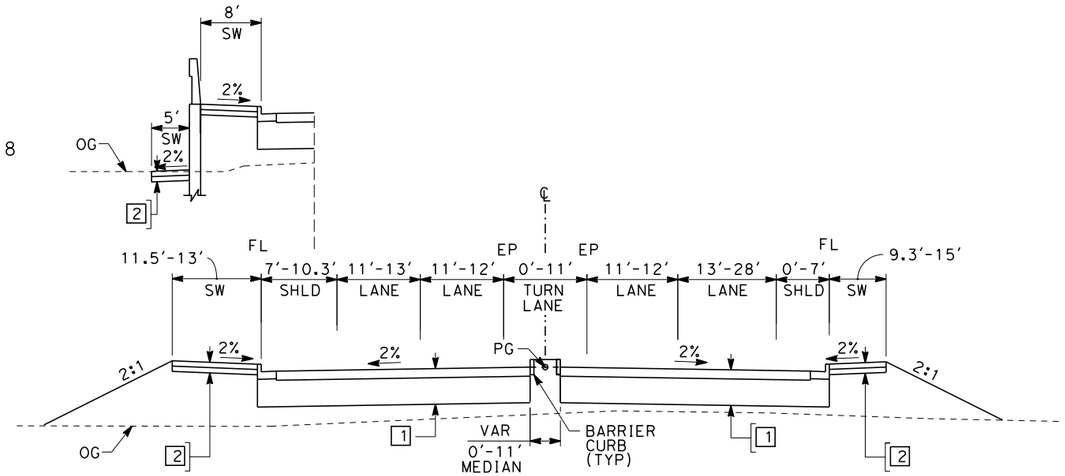

W OLIVE AVE
"OLI" 30+37.24 TO 33+55.79

"OLI" 29+52.20 TO 30+37.24

"OLI" 24+41.82 TO 29+52.20

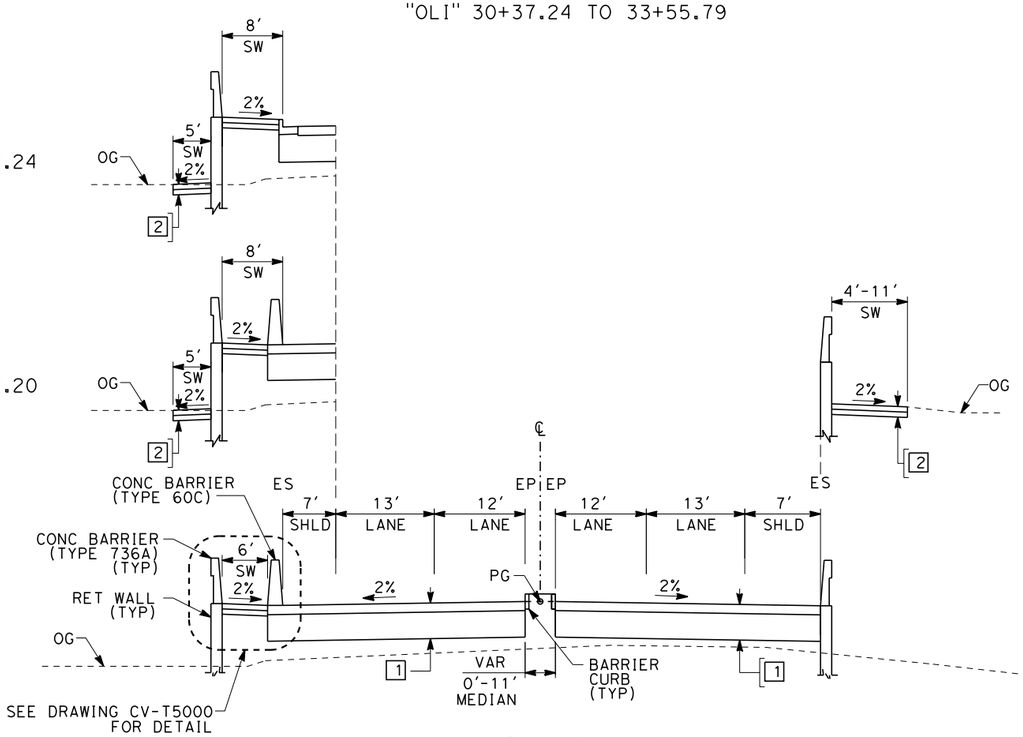

"OLI" 24+41.82 TO 30+37.24

W OLIVE AVE
"OLI" 14+80.14 TO 20+25.60
"OLI" 24+52.60 TO 30+37.24

"CAR" 10+00.00 TO 12+06.27

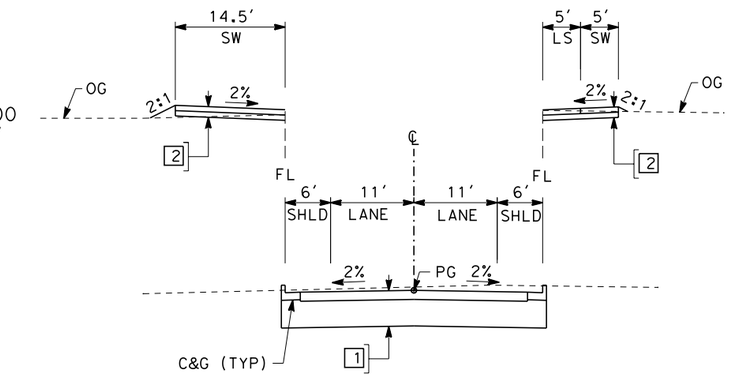

"CAR" 10+00.00 TO 12+06.27

N CARRUTH AVE
"CAR" 10+00.00 TO 12+69.34

10 0 10 20
1"=10'
SCALE APPLICABLE FOR FULL SIZE ONLY

ADDENDUM 3 - RFP HSR 11-16

REV	DATE	BY	CHK	APP	DESCRIPTION
A	2012-06	VO	BR	RP	REVISED FOR ADDENDUM 3

DESIGNED BY I. JOSIFEK
DRAWN BY V. ORTEGA
CHECKED BY B. RAWSON
IN CHARGE Q. EARLE
DATE 06/12/12

PROPOSED PRELIMINARY DESIGN
NOT FOR CONSTRUCTION

URS | HMM | ARUP
CALIFORNIA HIGH-SPEED TRAIN

CALIFORNIA HIGH-SPEED RAIL AUTHORITY

CALIFORNIA HIGH-SPEED TRAIN PROJECT
SIERRA SUBDIVISION
PACKAGE 1A
ROADWAY
ROADWAY / GRADE SEPARATION
TYPICAL SECTIONS

CONTRACT NO.
DRAWING NO. CV-T3004-A3
SCALE AS SHOWN
SHEET NO.

06/29/2012 ADDENDUM 3 - RFP HSR 11-16

CHSR_PDF_half_black.pltG:_Sacramento\URS\235413 CA HSR Fresno Palmdale\16.0 Drawings\N-30% RBNSF Fresno\Sheet Files\Civil\Package 1A\S1-CV-T3004-A3.dgn
6/12/2012 3:40:37 PM
or152801

STRUCTURAL SECTIONS
TYPICAL ROADWAY

1 — 0.50' HMA (TYPE A)
1.50' CL2 AB

2 — 0.35' PCC
0.35' CL2 AB

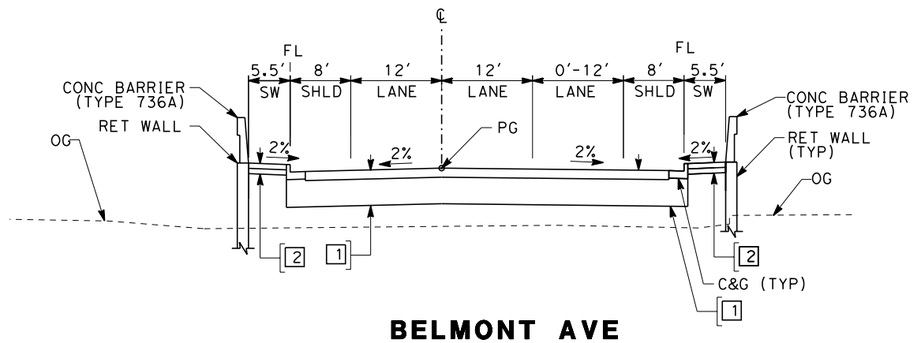

BELMONT AVE
"BEL" 13+23.65 TO 19+88.63

"BEL" 25+90.30 TO 28+35.76

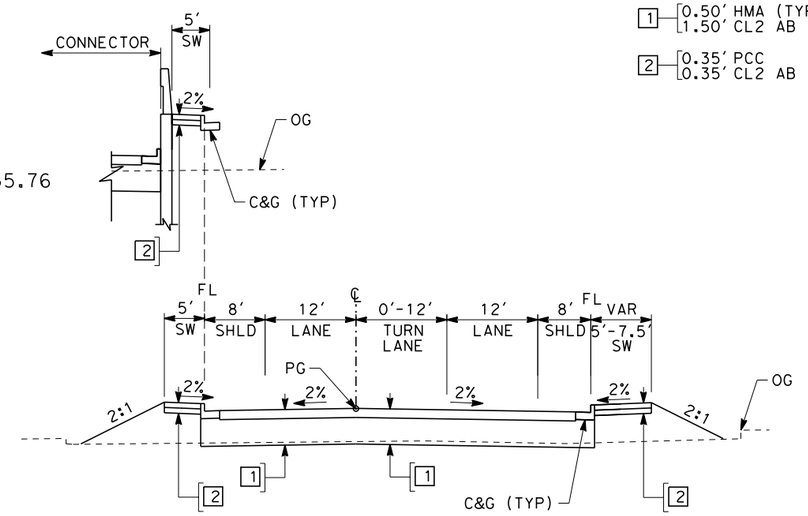

BELMONT AVE
"BEL" 26+14.64 TO 35+50.00

"BEL" 12+50.00 TO 13+23.65

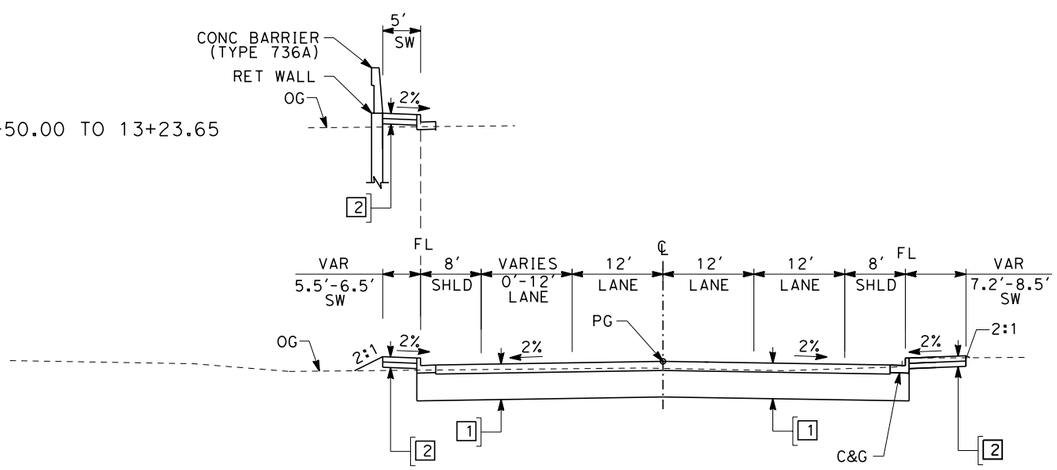

BELMONT AVE
"BEL" 11+30.00 TO 13+23.65

10 0 10 20
1"=10'
SCALE APPLICABLE FOR FULL SIZE ONLY

ADDENDUM 3 - RFP HSR 11-16

06/29/2012 ADDENDUM 3 - RFP HSR 11-16

REV	DATE	BY	CHK	APP	DESCRIPTION
A	2012-06	VO	BR	RP	REVISED FOR ADDENDUM 3

DESIGNED BY I. JOSIFEK
DRAWN BY V. ORTEGA
CHECKED BY B. RAWSON
IN CHARGE Q. EARLE
DATE 06/12/12

PROPOSED PRELIMINARY DESIGN

NOT FOR CONSTRUCTION

URS | HMM | ARUP
CALIFORNIA HIGH-SPEED TRAIN

CALIFORNIA HIGH-SPEED RAIL AUTHORITY

CALIFORNIA HIGH-SPEED TRAIN PROJECT
SIERRA SUBDIVISION
PACKAGE 1A
ROADWAY
ROADWAY / GRADE SEPARATION
TYPICAL SECTIONS

CONTRACT NO.
DRAWING NO. CV-T3005-A3
SCALE AS SHOWN
SHEET NO.

$FILE$ $PLTDRVS$ $PENTBLS$ $TIME$ $DATE$ $USER$

STRUCTURAL SECTIONS
TYPICAL ROADWAY

1 — 0.50' HMA (TYPE A)
1.50' CL2 AB

2 — 0.35' PCC
0.35' CL2 AB

'HS" 22+83.75 TO 24+75.00

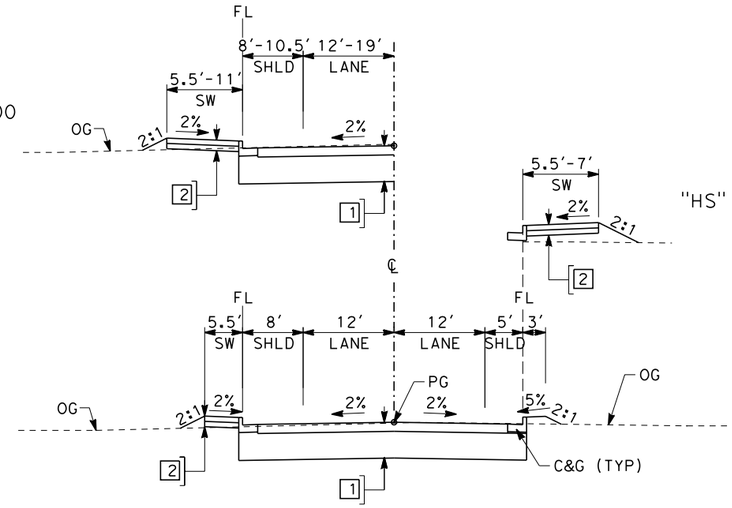

"HS" 22+55.77 TO 24+75.00

H ST
"HS" 12+54.83 TO 24+75.00

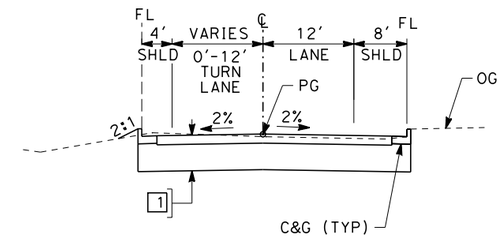

DRIVEWAY
"DWY" 10+00.00 TO 14+90.00

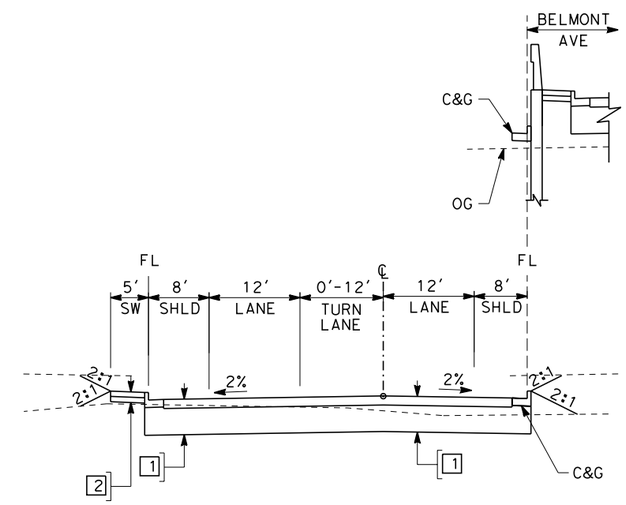

"CON" 10+00.00 TO 14+93.74

CONNECTOR
"CON" 10+00.00 TO 18+20.68

10 0 10 20
1"=10'
SCALE APPLICABLE FOR FULL SIZE ONLY

06/29/2012 ADDENDUM 3 - RFP HSR 11-16

ADDENDUM 3 - RFP HSR 11-16

REV	DATE	BY	CHK	APP	DESCRIPTION
A	2012-06	VO	BR	RP	REVISED FOR ADDENDUM 3

DESIGNED BY I. JOSIFEK
DRAWN BY V. ORTEGA
CHECKED BY B. RAWSON
IN CHARGE O. EARLE
DATE 06/12/12

PROPOSED PRELIMINARY DESIGN

NOT FOR CONSTRUCTION

URS | HMM | ARUP
CALIFORNIA HIGH-SPEED TRAIN

CALIFORNIA HIGH-SPEED RAIL AUTHORITY

CALIFORNIA HIGH-SPEED TRAIN PROJECT
SIERRA SUBDIVISION
PACKAGE 1A
ROADWAY
ROADWAY / GRADE SEPARATION
TYPICAL SECTIONS

CONTRACT NO.
DRAWING NO. CV-T3006-A3
SCALE AS SHOWN
SHEET NO.

$USER$ $DATE$ $TIME$ $PENTBLS$ $PLTDRVS$ $FILE$

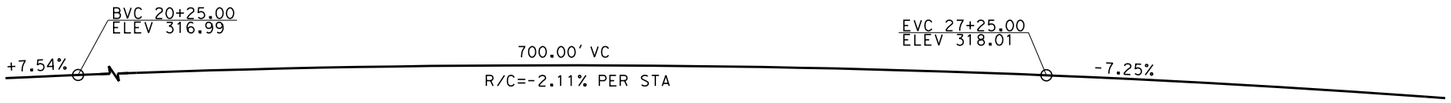

PROFILE GRADE
NO SCALE

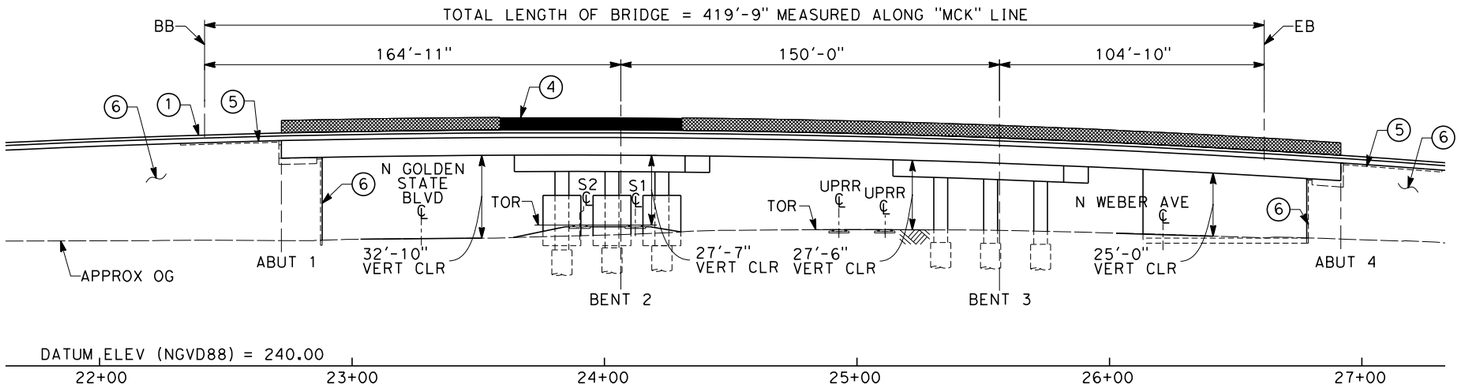

ELEVATION
SCALE: 1"=30'-0"

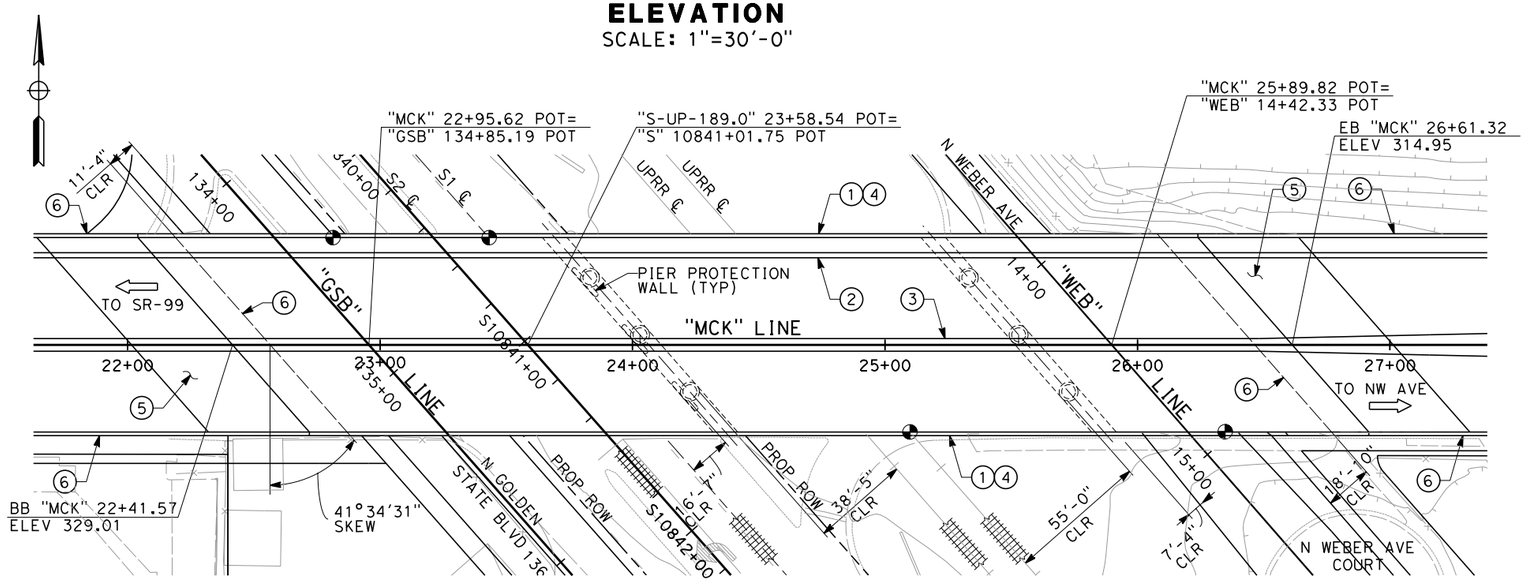

PLAN
SCALE: 1"=30'-0"

NOTES:

1. CONCRETE BARRIER (TYPE 736 MODIFIED)
2. CONCRETE BARRIER (TYPE 60)
3. BARRIER CURB
4. AR FENCE
5. STRUCTURE APPROACH SLAB
6. MSE RETAINING WALL
7. FUTURE UTILITY OPENING
8. FOR UTILITY INFORMATION, SEE UTILITY BASE MAP PLANS.
9. FOR INTRUSION DETECTION/PROTECTION, SEE ALIGNMENT PLANS.
10. OPENING FOR RELOCATED WATER LINE

LEGEND:

- INDICATES DIRECTION OF TRAFFIC
- INDICATES POINT OF MINIMUM VERTICAL CLEARANCE
- INDICATES RAILROAD AND HIGH-SPEED TRAIN TRACK

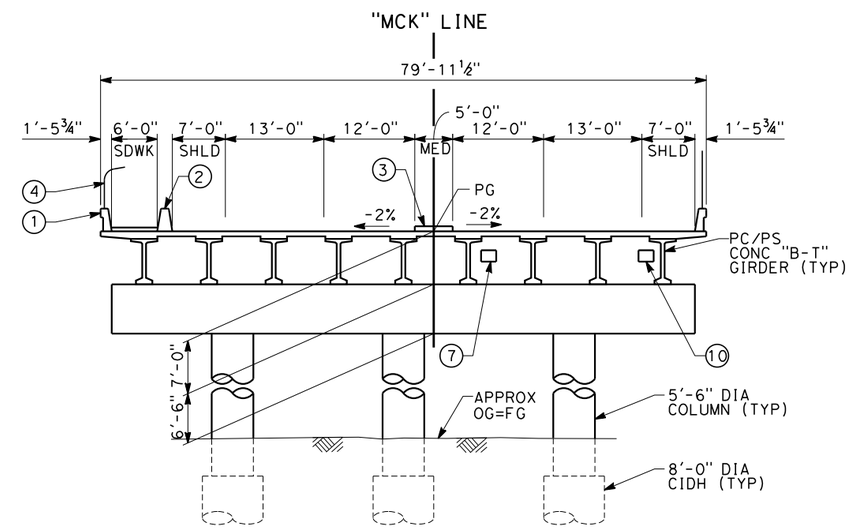

TYPICAL SECTION
SCALE: 1"=10'-0"

ADDENDUM 3 - RFP HSR 11-16

REV	DATE	BY	CHK	APP	DESCRIPTION
A	2012-06	VO	BR	RP	REVISED FOR ADDENDUM 3

DESIGNED BY L. SMITH
DRAWN BY D. BARNHART
CHECKED BY M. BURGARD
IN CHARGE Y. BERI
DATE 06/12/12

PROPOSED PRELIMINARY DESIGN

NOT FOR CONSTRUCTION

URS | HMM | ARUP
CALIFORNIA HIGH-SPEED TRAIN

CALIFORNIA HIGH-SPEED RAIL AUTHORITY

CALIFORNIA HIGH-SPEED TRAIN PROJECT
SIERRA SUBDIVISION
PACKAGE 1A
ROADWAY
DRAFT GENERAL PLAN
W MCKINLEY AVE

CONTRACT NO.
DRAWING NO. ST-K1026-A3
SCALE AS SHOWN
SHEET NO.

06/29/2012 ADDENDUM 3 - RFP HSR 11-16

COB48964 6/12/2012 5:31:22 PM CAHSRP-r1.tbl CHSR_PDF_half_black.pltG:_Sacramento\URS\235413 CA HSR Fresno Palmdale\16.0 Drawings\N-30% RBNSF Fresno\Sheet Files\Structures\S1-ST-I0001-MCK.new 04-24-

PROFILE GRADE
NO SCALE

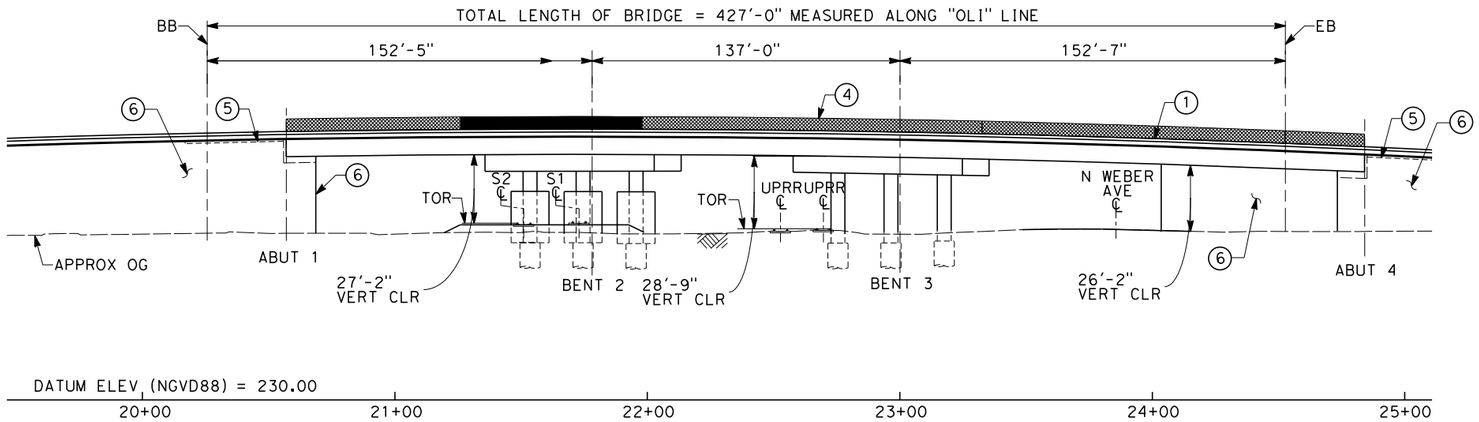

DEVELOPED ELEVATION
SCALE: 1"=30'-0"

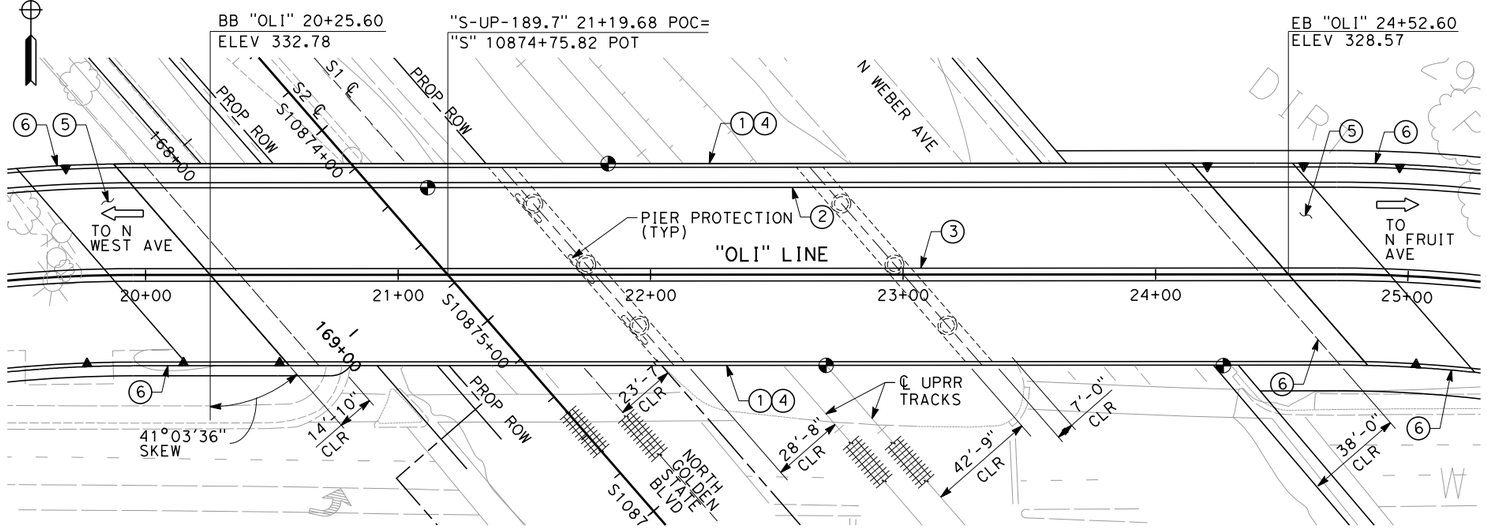

PLAN
SCALE: 1"=30'-0"

NOTES:

1. CONCRETE BARRIER (TYPE 736 MODIFIED)
2. CONCRETE BARRIER (TYPE 60)
3. BARRIER CURB
4. AR FENCE
5. STRUCTURE APPROACH SLAB
6. MSE RETAINING WALL
7. FUTURE UTILITY OPENING
8. FOR UTILITY INFORMATION, SEE UTILITY BASE MAP PLANS.
9. FOR INTRUSION DETECTION/PROTECTION, SEE ALIGNMENT PLANS.
10. OPENING FOR RELOCATED WATER LINE

LEGEND:

- INDICATES DIRECTION OF TRAFFIC
- INDICATES POINT OF MINIMUM VERTICAL CLEARANCE
- INDICATES RAILROAD AND HIGH-SPEED TRAIN TRACK

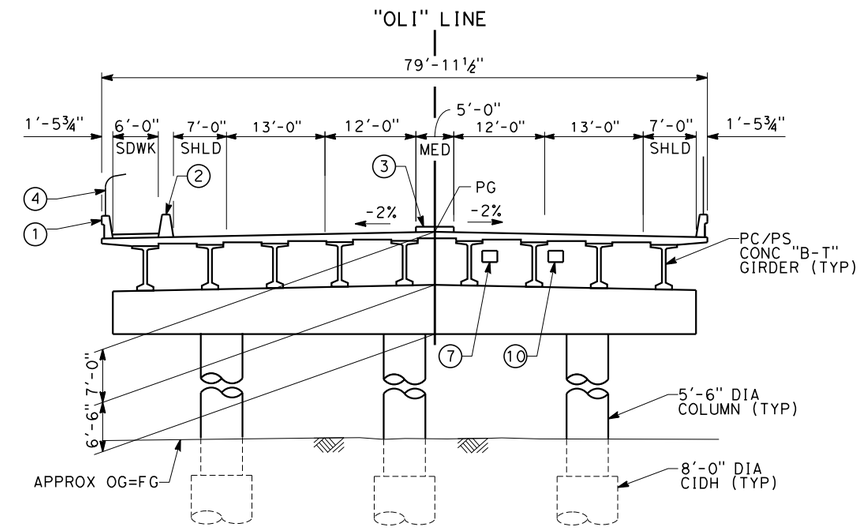

TYPICAL SECTION
SCALE: 1"=10'-0"

ADDENDUM 3 - RFP HSR 11-16

06/29/2012 ADDENDUM 3 - RFP HSR 11-16

REV	DATE	BY	CHK	APP	DESCRIPTION
A	2012-06	VO	BR	RP	REVISED FOR ADDENDUM 3

DESIGNED BY M. BURGARD
DRAWN BY D. BARNHART
CHECKED BY L. SMITH
IN CHARGE Y. BERI
DATE 06/12/12

PROPOSED PRELIMINARY DESIGN

NOT FOR CONSTRUCTION

URS | HMM | ARUP
CALIFORNIA HIGH-SPEED TRAIN

CALIFORNIA HIGH-SPEED RAIL AUTHORITY

CALIFORNIA HIGH-SPEED TRAIN PROJECT
SIERRA SUBDIVISION
PACKAGE 1A
ROADWAY
DRAFT GENERAL PLAN
W OLIVE AVE

CONTRACT NO.
DRAWING NO. ST-K1027-A3
SCALE AS SHOWN
SHEET NO.

C0B48964 6/12/2012 5:29:48 PM CAHSRP-r1.tbl CHSR_PDF_half_black.pl1G:_Sacramento\URS\235413 CA HSR Fresno Palmdale\16.0 Drawings\N-30% RBNSF Fresno\Sheet Files\Structures\S1-ST-I0001-OLV-new 04-17

PROFILE GRADE
NO SCALE

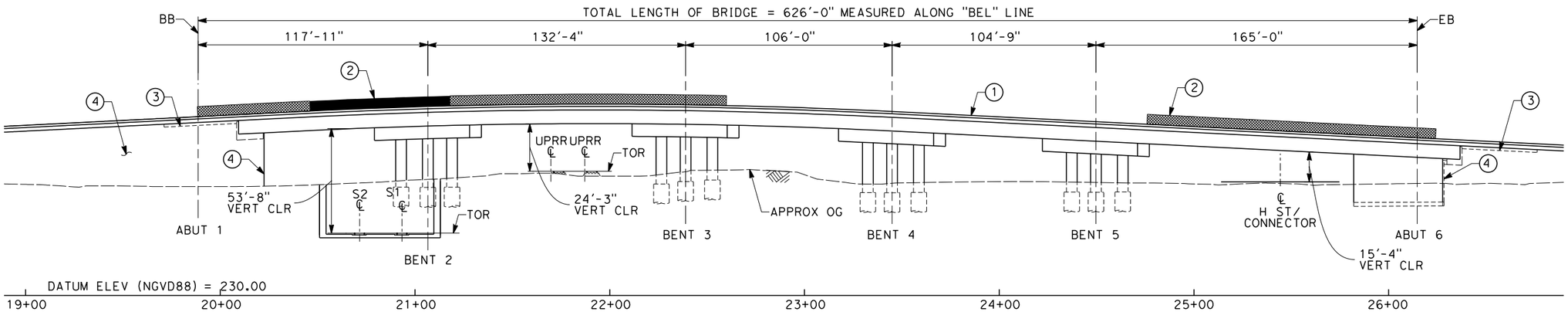

ELEVATION
SCALE: 1"=30'-0"

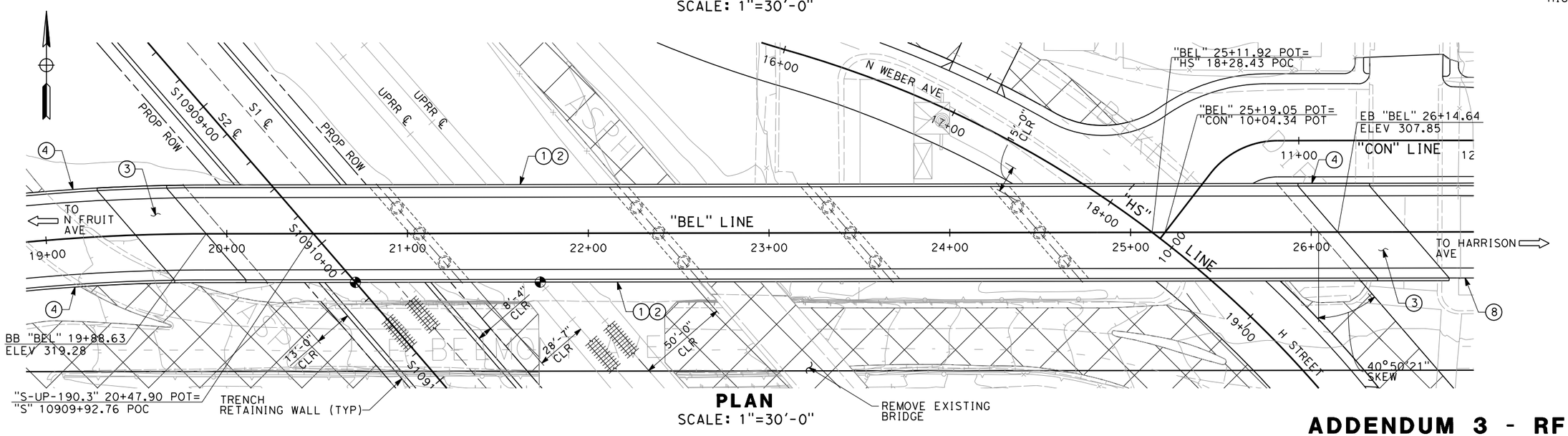

PLAN
SCALE: 1"=30'-0"

NOTES:

1. CONCRETE BARRIER (TYPE 736 MODIFIED)
2. AR FENCE
3. STRUCTURE APPROACH SLAB
4. MSE RETAINING WALL
5. FOR UTILITY INFORMATION, SEE UTILITY BASE MAP PLANS.
6. FOR INTRUSION DETECTION/ PROTECTION, SEE ALIGNMENT PLANS.
7. SEE NEXT SHEET (ST-K1029) FOR TYPICAL SECTION
8. MBGR

LEGEND:

- INDICATES DIRECTION OF TRAFFIC
- INDICATES POINT OF MINIMUM VERTICAL CLEARANCE
- INDICATES RAILROAD AND HIGH-SPEED TRAIN TRACK

ADDENDUM 3 - RFP HSR 11-16

06/29/2012 ADDENDUM 3 - RFP HSR 11-16

REV	DATE	BY	CHK	APP	DESCRIPTION
A	2012-06	VO	BR	RP	REVISED FOR ADDENDUM 3

DESIGNED BY L. SMITH
DRAWN BY T. PRETZER
CHECKED BY M. BURGARD
IN CHARGE Y. BERI
DATE 06/12/12

PROPOSED PRELIMINARY DESIGN

NOT FOR CONSTRUCTION

URS | HMM | ARUP
CALIFORNIA HIGH-SPEED TRAIN

CALIFORNIA HIGH-SPEED RAIL AUTHORITY

CALIFORNIA HIGH-SPEED TRAIN PROJECT
SIERRA SUBDIVISION
PACKAGE 1A
ROADWAY
DRAFT GENERAL PLAN
BELMONT AVE

CONTRACT NO.
DRAWING NO. ST-K1028-A3
SCALE AS SHOWN
SHEET NO.

COB48964 6/12/2012 5:14:58 PM CAHSRP-r1.tbl CHSR_PDF_half_black.pltG:_Sacramento\URS\235413 CA HSR Fresno Palmdale\16.0 Drawings\N-30% RBNSF Fresno\Sheet Files\Structures\S1-ST-I0001-BEL-OPT2-A3.dgn

ort52801 6/12/2012 11:31:19 AM CAHSRP-r1.tbl CHSR_PDF_half_black.pltG:_Sacramento\URS\235413 CA HSR Fresno Palmdale\16.0 Drawings\N-30% RBNSF Fresno\Sheet Files\Structures\S1-ST-I0002-BEL-OPT2-A3.dgn

NOTES:

1. CONCRETE BARRIER (TYPE 736 MODIFIED)
2. AR FENCE
3. FUTURE UTILITY OPENING
4. FOR UTILITY INFORMATION, SEE UTILITY BASE MAP PLANS.
5. FOR INTRUSION DETECTION/PROTECTION, SEE ALIGNMENT PLANS.

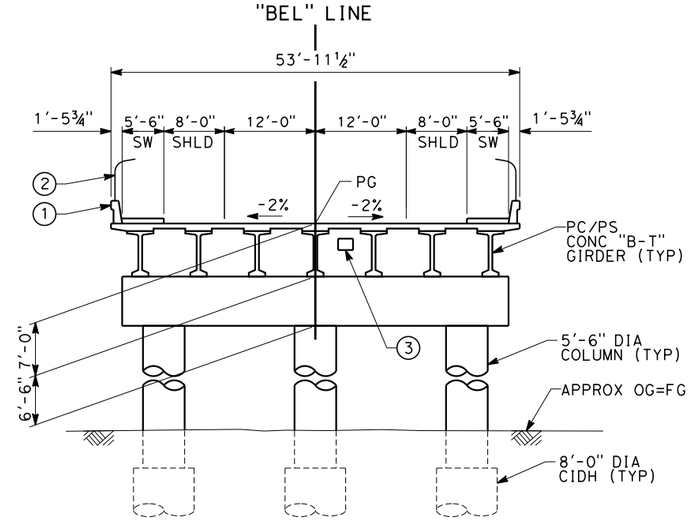

TYPICAL SECTION
SCALE: 1"=10'-0"

ADDENDUM 3 - RFP HSR 11-16

REV	DATE	BY	CHK	APP	DESCRIPTION
A	2012-06	VO	BR	RP	REVISED FOR ADDENDUM 3

DESIGNED BY L. SMITH
DRAWN BY T. PRETZER
CHECKED BY M. BURGARD
IN CHARGE Y. BERI
DATE 06/12/12

PROPOSED PRELIMINARY DESIGN

NOT FOR CONSTRUCTION

URS | HMM | ARUP
CALIFORNIA HIGH-SPEED TRAIN

CALIFORNIA HIGH-SPEED RAIL AUTHORITY

CALIFORNIA HIGH-SPEED TRAIN PROJECT
SIERRA SUBDIVISION
PACKAGE 1A
ROADWAY
DRAFT GENERAL PLAN
BELMONT AVE

CONTRACT NO.
DRAWING NO. ST-K1029-A3
SCALE AS SHOWN
SHEET NO.

06/29/2012 ADDENDUM 3 - RFP HSR 11-16

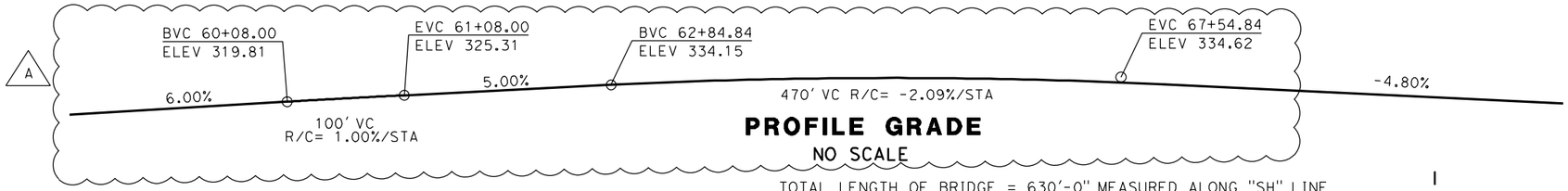

PROFILE GRADE

NO SCALE

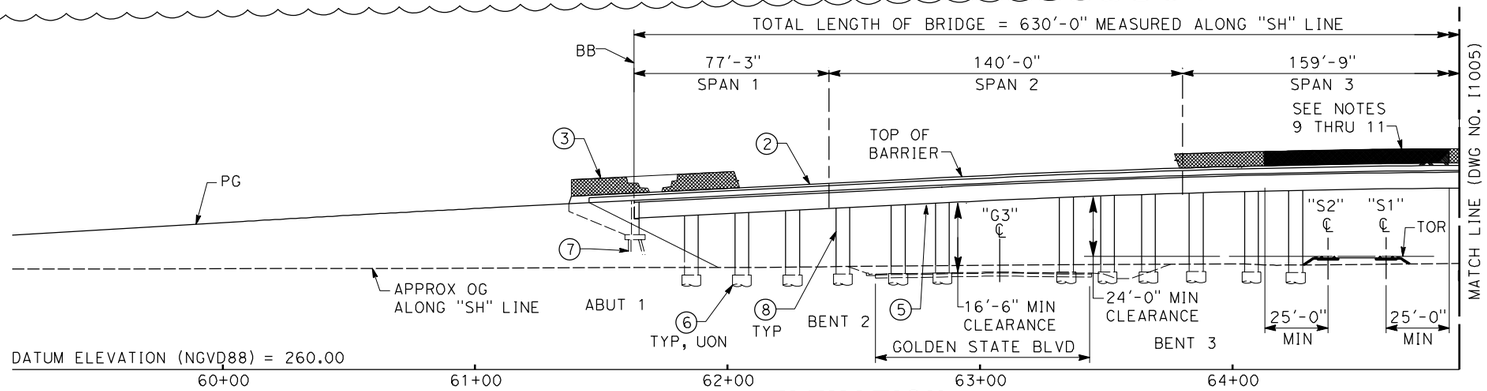

ELEVATION

SCALE: 1"=30'-0"

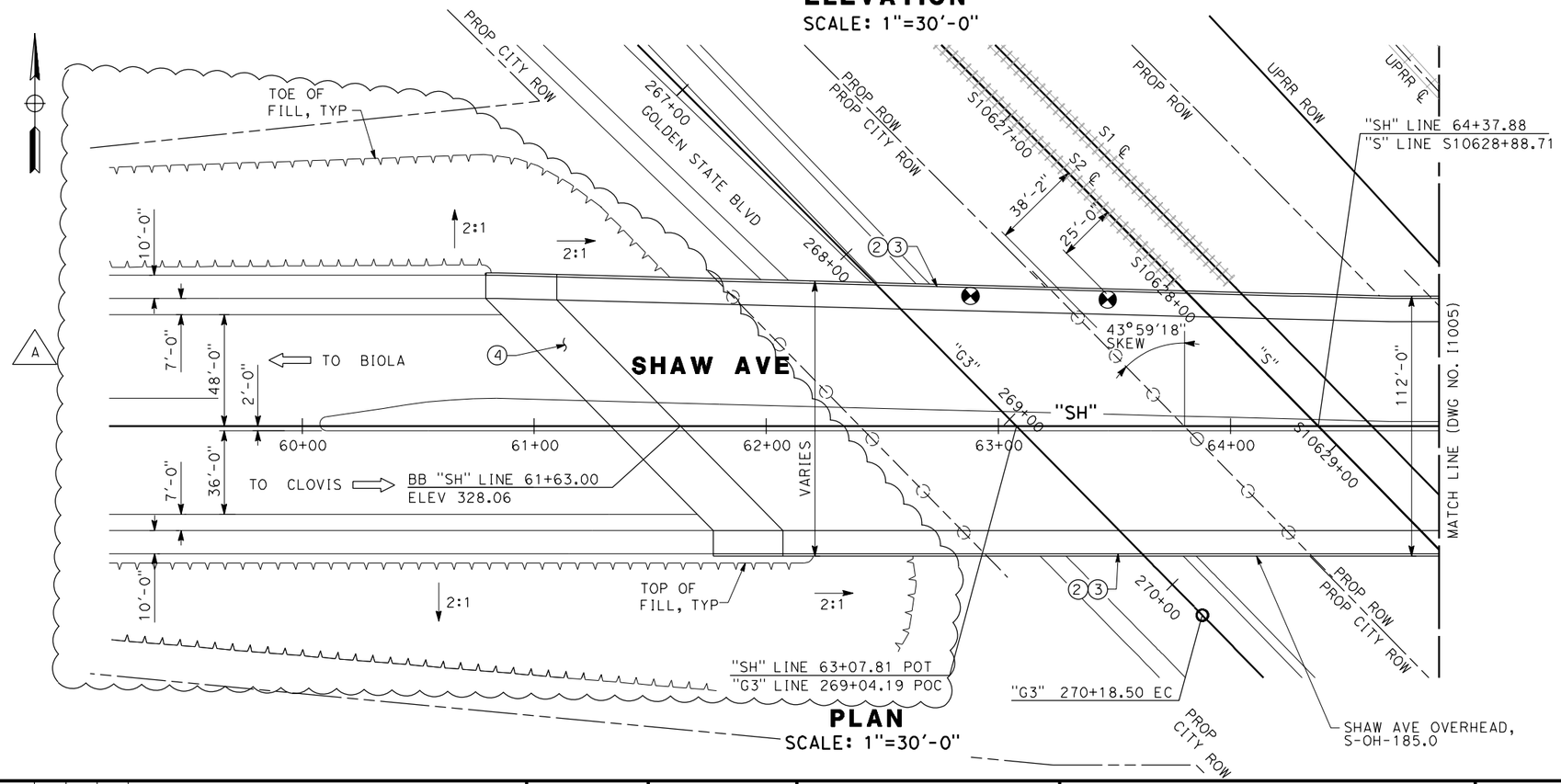

PLAN

SCALE: 1"=30'-0"

NOTES:

1. ROW SHOWN REPRESENTS THE MINIMUM ANTICIPATED ROW REQUIREMENTS. ACCURATE ROW AND ACCESS DATA WILL BE MADE AVAILABLE PRIOR TO NOTICE TO PROCEED.

(2) CONCRETE BARRIER (TYPE 26 MODIFIED)
(3) AR FENCE
(4) STRUCTURE APPROACH, TYPE N(30S)
(5) CIP/PS CONCRETE BOX GIRDER
(6) 7'-6" DIA CIDH PILE
(7) PC CONC PILE
(8) 5'-6" DIA CONCRETE COLUMN

9. AR FENCE SHALL BE PROVIDED AS INDICATED ON THE ELEVATION VIEW ON BOTH SIDES OF THE OVERHEAD STRUCTURE IN ALL NEW EXISTING STRUCTURES.
10. SOLID PLATE SHALL BE MOUNTED ON RIGID TRAFFIC BARRIER AND PROPERLY ATTACHED TO THE AR FENCE.
11. AR FENCE WITH SOLID PLATE SHALL EXTEND 25 FEET FROM CENTERLINE OF THE OUTER MOST TRACKS.
12. FOR UTILITY INFORMATION, SEE UTILITY BASE MAP PLANS.
13. EXISTING UPRR ROW TO BE CONFIRMED ON SITE.

LEGEND:

⇦	DIRECTION OF TRAFFIC
⊗	POINT OF MINIMUM VERTICAL CLEARANCE
	RAILROAD AND HIGH-SPEED TRAIN TRACK
———	NEW CONSTRUCTION
TOR	TOP OF RAIL
HST	HIGH SPEED TRAIN

ADDENDUM 3 - RFP HSR 11-16

06/29/2012 ADDENDUM 3 - RFP HSR 11-16

REV	DATE	BY	CHK	APP	DESCRIPTION
A	2012-06	EC	HL	DM	REVISED FOR ADDENDUM 3

DESIGNED BY H. LEE
DRAWN BY E. CISNEROS
CHECKED BY T. DUDLEY
IN CHARGE D. MINISTER
DATE 02/28/2012

PROPOSED PRELIMINARY DESIGN

NOT FOR CONSTRUCTION

AECOM Technical Services, Inc.
2020 L Street, Suite 300
Sacramento, CA 95811
CH2MHILL

CALIFORNIA HIGH-SPEED RAIL AUTHORITY

CALIFORNIA HIGH-SPEED TRAIN PROJECT
SIERRA SUBDIVISION
PACKAGE 1A
ROADWAY
SHAW AVE OVERHEAD
GENERAL PLAN NO. 1

CONTRACT NO.
DRAWING NO. ST-I1004-A3
SCALE AS SHOWN
SHEET NO.

cisnerose 6/1/2012 4:38:00 PM cahsrp-r1.tbl chsr_half_black.plt \\usscr1fp001\Cadd\CHSR\60022962\Task-03_Merced-Fresno\cadd\Struct\Sheet\Addendum\1S-ST-I1004-A3.dgn

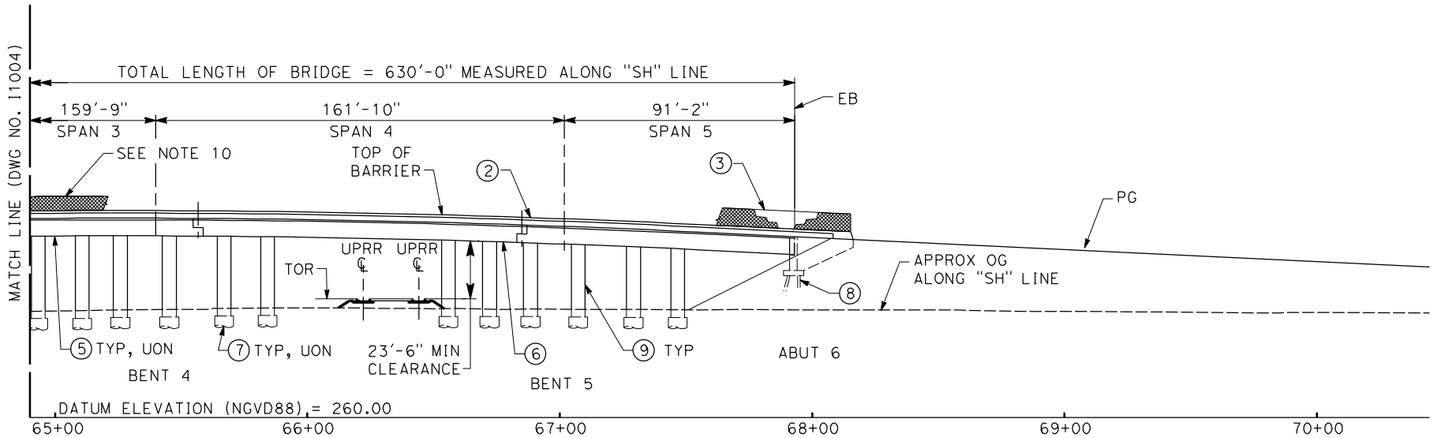

ELEVATION

SCALE: 1"=30'-0"

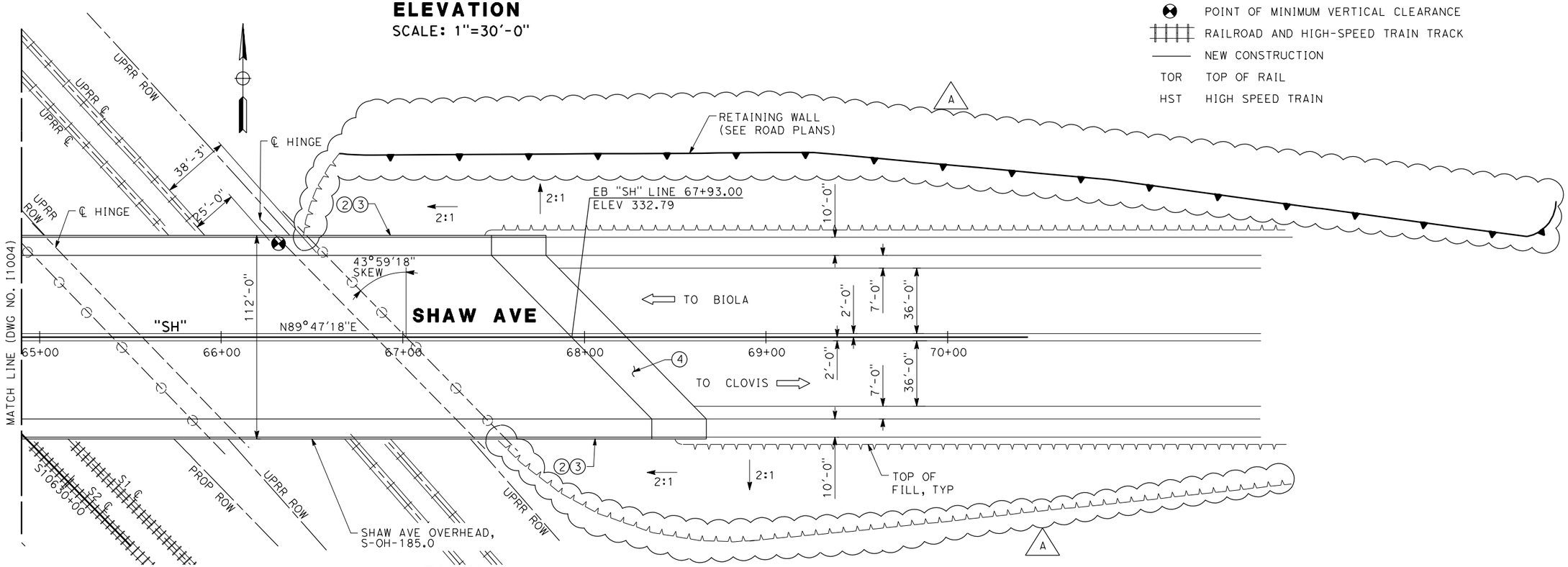

PLAN

SCALE: 1"=30'-0"

NOTES:

1. ROW SHOWN REPRESENTS THE MINIMUM ANTICIPATED ROW REQUIREMENTS. ACCURATE ROW AND ACCESS DATA WILL BE MADE AVAILABLE PRIOR TO NOTICE TO PROCEED.

(2) CONCRETE BARRIER (TYPE 26 MODIFIED)
(3) AR FENCE
(4) STRUCTURE APPROACH, TYPE N(30S)
(5) CIP/PS CONCRETE BOX GIRDER
(6) PC/PS BULB-TEE GIRDER
(7) 7'-6" DIA CIDH PILE
(8) PC CONC PILE
(9) 5'-6" DIA CONCRETE COLUMN

10. AR FENCE SHALL BE PROVIDED AS INDICATED ON THE ELEVATION VIEW ON BOTH SIDES OF THE OVERHEAD STRUCTURE IN ALL NEW EXISTING STRUCTURES.
11. FOR UTILITY INFORMATION, SEE UTILITY BASE MAP PLANS.
12. EXISTING UPRR ROW TO BE CONFIRMED ON SITE.

LEGEND:

- DIRECTION OF TRAFFIC
- POINT OF MINIMUM VERTICAL CLEARANCE
- RAILROAD AND HIGH-SPEED TRAIN TRACK
- NEW CONSTRUCTION
- TOR — TOP OF RAIL
- HST — HIGH SPEED TRAIN

ADDENDUM 3 - RFP HSR 11-16

REV	DATE	BY	CHK	APP	DESCRIPTION
A	2012-06	EC	HL	DM	REVISED FOR ADDENDUM 3

DESIGNED BY H. LEE
DRAWN BY E. CISNEROS
CHECKED BY T. DUDLEY
IN CHARGE D. MINISTER
DATE 02/28/2012

30% IN-PROGRESS SUBMITTAL FOR INTERNAL USE ONLY

NOT FOR CONSTRUCTION

AECOM Technical Services, Inc.
2020 L Street, Suite 300
Sacramento, CA 95811
CH2MHILL

CALIFORNIA HIGH-SPEED RAIL AUTHORITY

CALIFORNIA HIGH-SPEED TRAIN PROJECT
SIERRA SUBDIVISION
PACKAGE 1A
ROADWAY
SHAW AVE OVERHEAD
GENERAL PLAN NO. 2

CONTRACT NO.
DRAWING NO. ST-I1005-A3
SCALE AS SHOWN
SHEET NO.

06/29/2012 ADDENDUM 3 - RFP HSR 11-16
\\usscr1fp001\Cadd\CHSR\60022962\Task-03_Merced-Fresno\CADD\Struct\Sheet\Addendum\1S-ST-I1005-A3.dgn $PENTBLS$ $PLTDRVS$ 6/12/2012 2:15:23 PM USER=cisneros

LINE DATA

NO.	BEARING	DISTANCE
1	S 47°26'56" E	154.19'

CURVE DATA

NO.	R	Δ	T	L
1	1130.00'	35°58'39"	323.78'	630.67'
2	1130.00'	31°06'53"	361.92'	705.97'

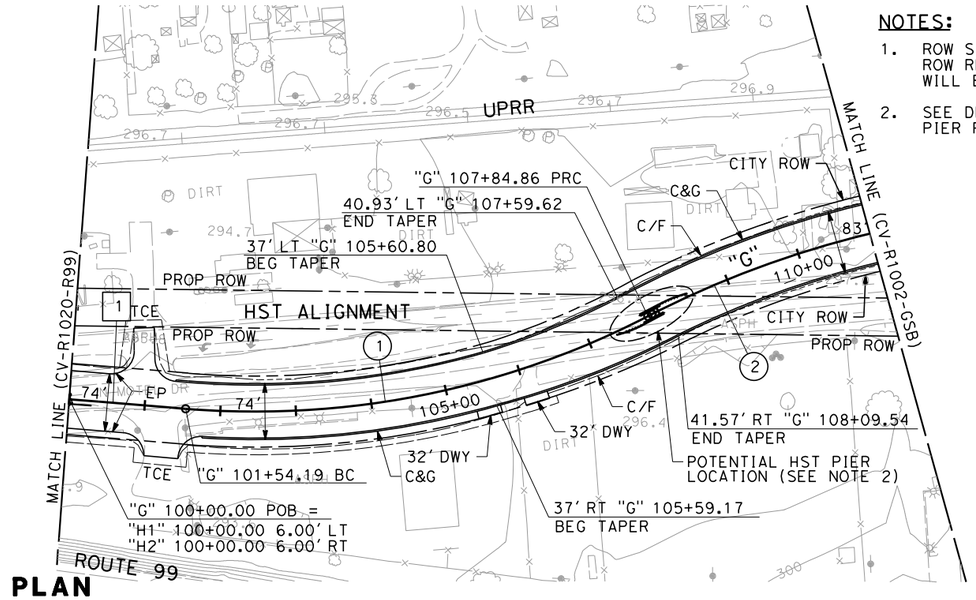

PLAN

NOTES:

1. ROW SHOWN REPRESENTS THE MINIMUM ANTICIPATED ROW REQUIREMENTS. ACCURATE ROW AND ACCESS DATA WILL BE MADE AVAILABLE PRIOR TO AWARD.
2. SEE DESIGN MANUAL FOR DETAILS OF PIER PROTECTION REQUIREMENT.

100 0 100 200
1"=100' HOR
SCALE APPLICABLE FOR FULL SIZE ONLY

10 0 10 20
1"=10' VERT
SCALE APPLICABLE FOR FULL SIZE ONLY

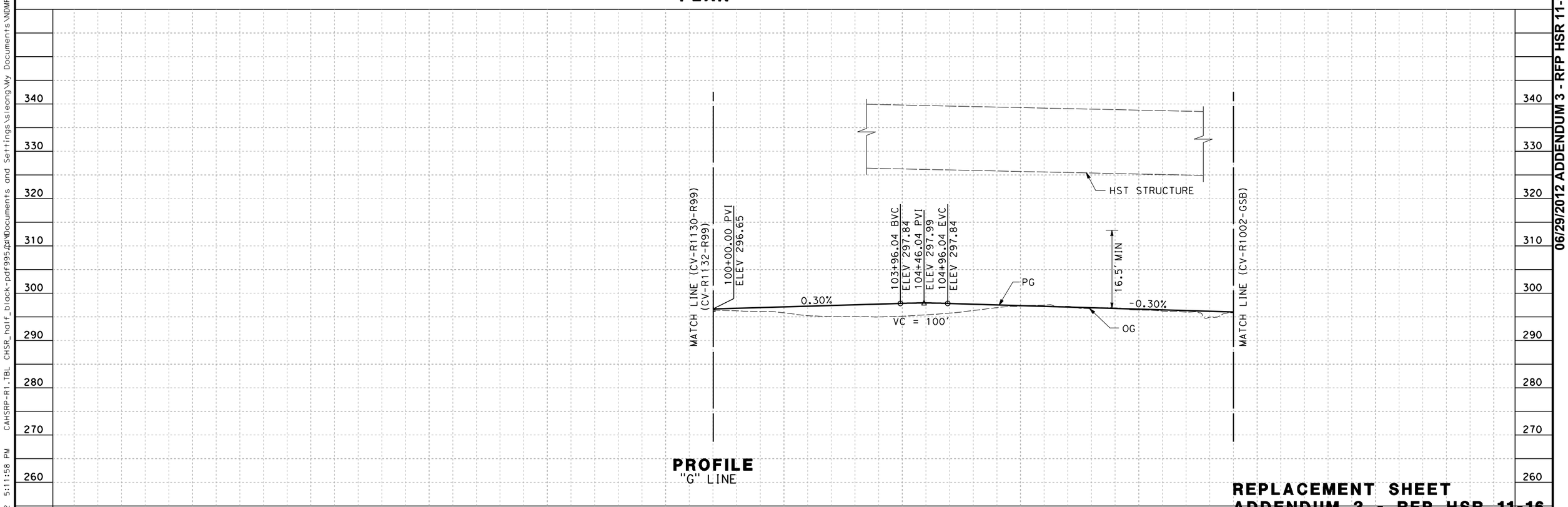

PROFILE
"G" LINE

REPLACEMENT SHEET
ADDENDUM 3 - RFP HSR 11-16

06/29/2012 ADDENDUM 3 - RFP HSR 11-16

REV	DATE	BY	CHK	APP	DESCRIPTION
A	2012-06	CC	VC	FN	REVISED FOR ADDENDUM 3

DESIGNED BY V. CHIO
DRAWN BY D. ELKINS
CHECKED BY L. HEUSTON
IN CHARGE F. NOBARI
DATE 2/17/12

PROPOSED PRELIMINARY DESIGN

NOT FOR CONSTRUCTION

AECOM Technical Services, Inc.
2020 L Street, Suite 300
Sacramento, CA 95811
CH2MHILL

CALIFORNIA HIGH-SPEED RAIL AUTHORITY

CALIFORNIA HIGH-SPEED TRAIN PROJECT
SIERRA SUBDIVISION
PACKAGE 1A
ROADWAY
PLAN AND PROFILE
GOLDEN STATE BOULEVARD

CONTRACT NO.
DRAWING NO. CV-R1001-GSB-A3
SCALE AS SHOWN
SHEET NO.

sleong 6/8/2012 5:11:58 PM CAHSRP-R1.TBL CHSR_half_black-pdf995.pmp C:\Documents and Settings\sleong\My Documents\NDMProj\356751 - California High Speed Rail - SR99 Improvements\1S-CV-R1001-GSB-A3.dgn

CURVE DATA

NO.	R	Δ	T	L
2	1300.00′	31°06′53″	361.92′	705.97′
3	500.00′	11°27′33″	50.17′	100.00′
4	1550.00′	15°12′54″	207.02′	411.60′

LINE DATA

NO.	BEARING	DISTANCE
2	S 35°21′21″ W	132.47′
3	S 56°27′10″ E	331.20′

CURVE DATA

NO.	R	Δ	T	L
5	2350.00′	07°04′26″	145.25′	290.14′
6	1700.00′	35°37′15″	546.15′	1056.89′
7	1130.00′	31°31′44″	319.00′	621.82′

NOTES:

1. ROW SHOWN REPRESENTS THE MINIMUM ANTICIPATED ROW REQUIREMENTS. ACCURATE ROW AND ACCESS DATA WILL BE MADE AVAILABLE PRIOR TO AWARD.
2. EXISTING FMFCD BASIN TO BE RELOCATED PRIOR TO CONSTRUCTION OF ROADWAY IMPROVEMENT. SEE SPECIAL PROVISIONS FOR DETAIL REQUIREMENTS.
3. SEE DESIGN MANUAL FOR DETAILS OF PIER PROTECTION REQUIREMENTS.

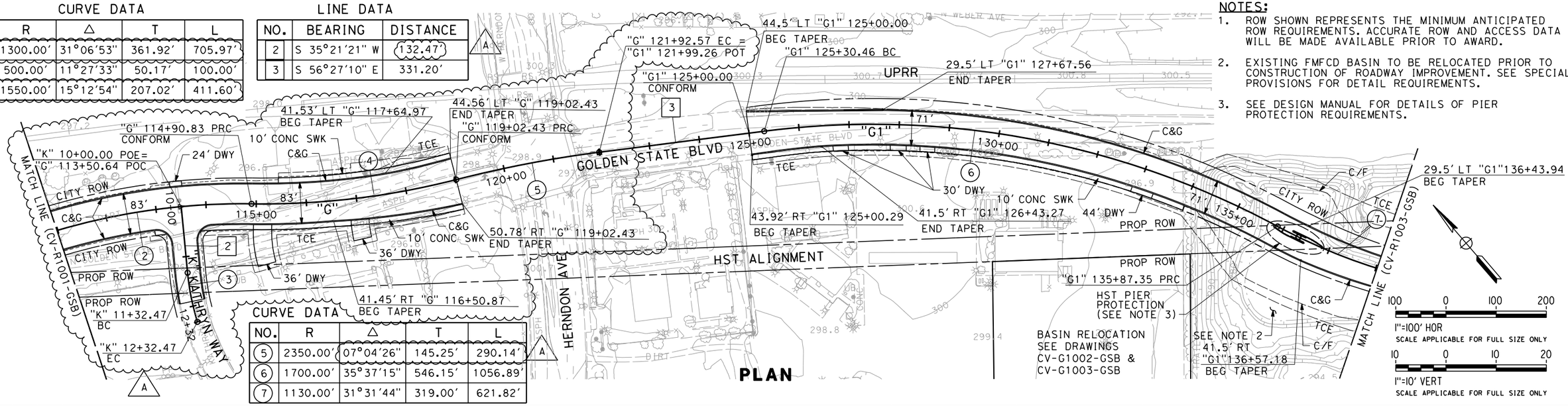

PLAN

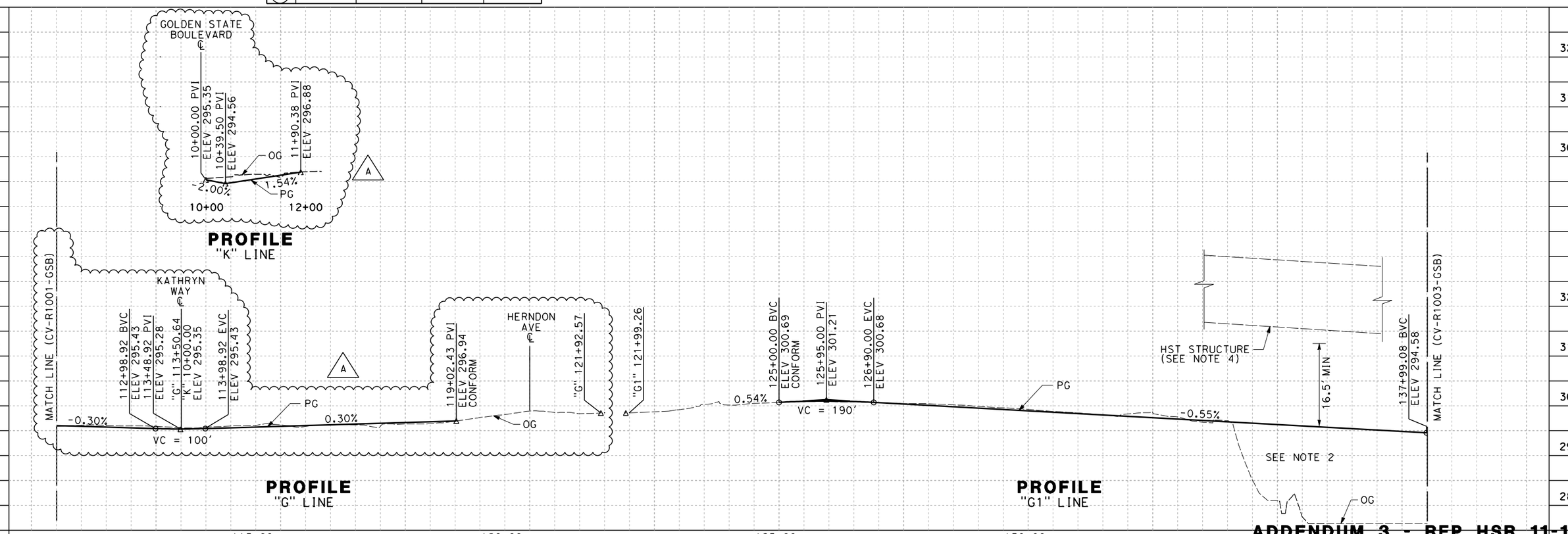

PROFILE "K" LINE

PROFILE "G" LINE

PROFILE "G1" LINE

ADDENDUM 3 - RFP HSR 11-16

REV	DATE	BY	CHK	APP	DESCRIPTION
A	2012-06	CC	VC	FN	REVISED FOR ADDENDUM 3

DESIGNED BY V. CHIO
DRAWN BY D. ELKINS
CHECKED BY L. HEUSTON
IN CHARGE F. NOBARI
DATE 2/17/12

PROPOSED PRELIMINARY DESIGN

NOT FOR CONSTRUCTION

AECOM Technical Services, Inc.
2020 L Street, Suite 300
Sacramento, CA 95811
CH2MHILL

CALIFORNIA HIGH-SPEED RAIL AUTHORITY

CALIFORNIA HIGH-SPEED TRAIN PROJECT
SIERRA SUBDIVISION
PACKAGE 1A
ROADWAY
PLAN AND PROFILE
GOLDEN STATE BOULEVARD

CONTRACT NO.
DRAWING NO. CV-R1002-GSB-A3
SCALE AS SHOWN
SHEET NO.

06/29/2012 ADDENDUM 3 - RFP HSR 11-16

6/11/2012 12:50:11 PM CAHSRP-R1.TBL CHSR_half_black-pdf995.pc3 sleong C:\Documents and Settings\sleong\My Documents\NDMProj\356751 - California High Speed Rail - SR99 Improvements\1S-CV-R1002-GSB-A3.dgn

LINE DATA

NO.	BEARING	DISTANCE
28	N 89°17'00" E	627.41'
29	N 89°47'18" E	2553.12'
35	S 44°47'18" E	120.00'
36	N 38°46'24" E	100.00'

CURVE DATA

NO.	R	Δ	T	L
27	188.75'	96°42'09"	212.23'	318.57'

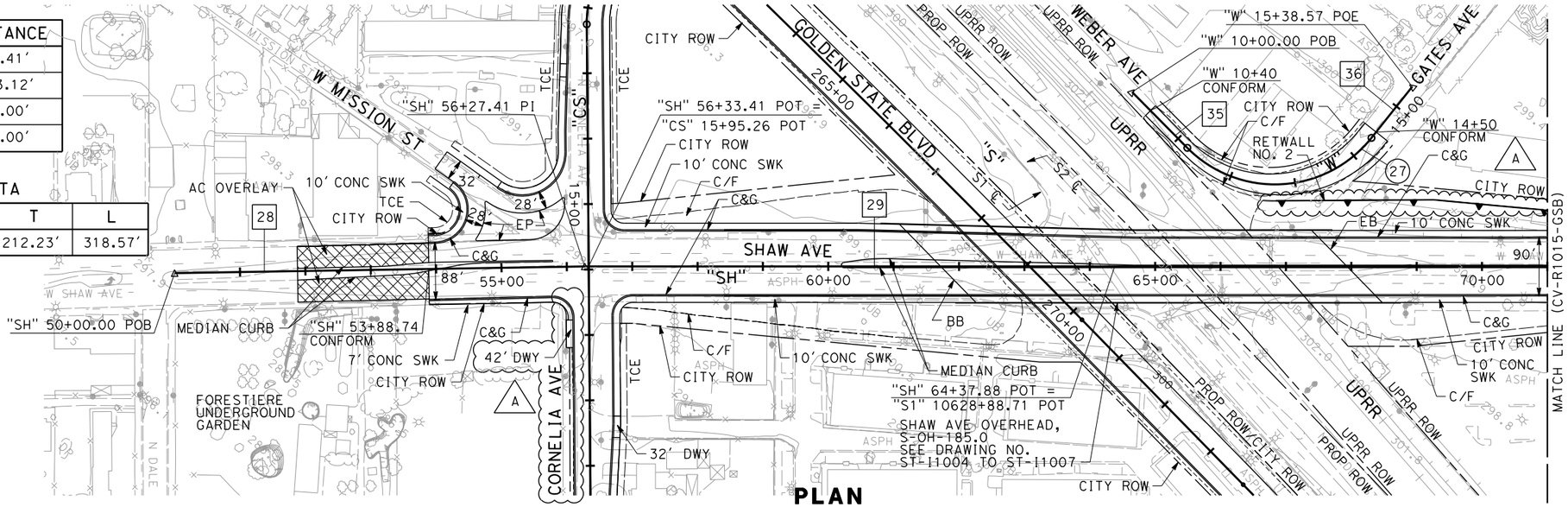

PLAN

NOTES:

1. ROW SHOWN REPRESENTS THE MINIMUM ANTICIPATED ROW REQUIREMENTS. ACCURATE ROW AND ACCESS DATA WILL BE MADE AVAILABLE PRIOR TO AWARD.
2. SEE SHEETS CV-R1001-GSB THRU CV-R1011-GSB FOR GOLDEN STATE BLVD.
3. SEE SHEET CV-R1016-GSB FOR CORNELIA AVENUE.
4. CONSTRUCT SIDEWALK RAMPS AND LANDING IN ACCORDANCE WITH REQUIREMENTS PER "2010 ADA STANDARDS FOR ACCESSIBLE DESIGN".

100 0 100 200
1"=100' HOR
SCALE APPLICABLE FOR FULL SIZE ONLY

10 0 10 20
1"=10' VERT
SCALE APPLICABLE FOR FULL SIZE ONLY

RETAINING WALL DATA

NO.	LOCATIONS BEGIN	LOCATIONS END	LENGTH	MAX HEIGHT
2	25.00' RT "W" 12+53.00	36.00' RT "J" 12+85.00	685'	17'

TABLE 1

POINT	STA	LT SWK ELEV	RT SWK ELEV
A	57+39.00	303.23	303.45
B	57+44.00	303.34	303.56
C	57+68.81	305.22	305.44
D	58+01.28	307.22	307.42
E	58+43.04	309.72	309.92
F	58+84.80	312.22	312.42
G	59+26.57	314.72	314.92
H	59+68.33	317.22	317.42
I	60+10.10	319.72	319.92
J	60+54.16	322.22	322.42
K	61+03.00	324.72	324.91
L	61+08.00	324.72	324.91

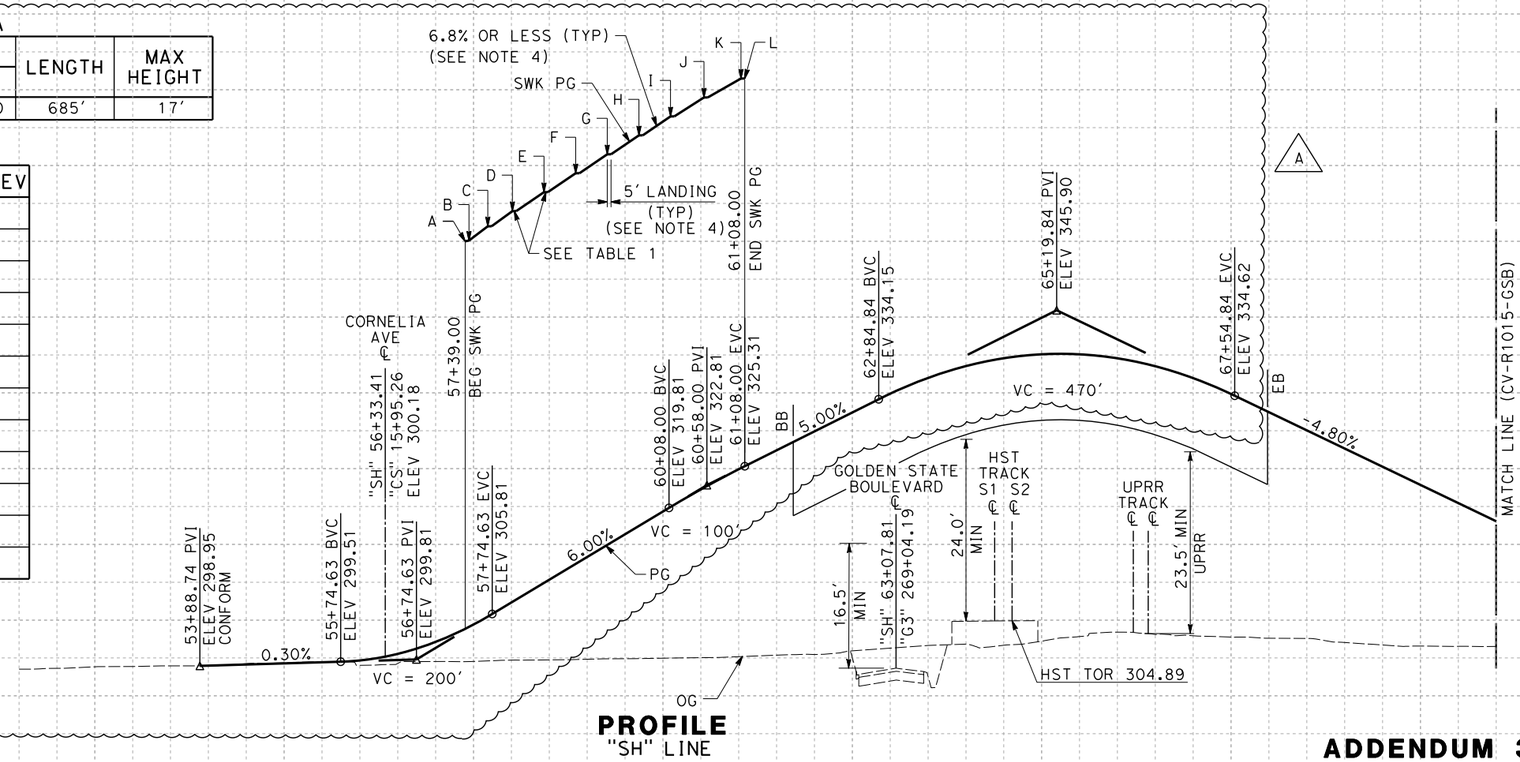

PROFILE
"SH" LINE

ADDENDUM 3 - RFP HSR 11-16

06/29/2012 ADDENDUM 3 - RFP HSR 11-16

REV	DATE	BY	CHK	APP	DESCRIPTION
A	2012-06	CC	VC	FN	REVISED FOR ADDENDUM 3

DESIGNED BY V. CHIO
DRAWN BY D. ELKINS
CHECKED BY L. HEUSTON
IN CHARGE F. NOBARI
DATE 2/17/12

PROPOSED PRELIMINARY DESIGN

NOT FOR CONSTRUCTION

AECOM Technical Services, Inc.
2020 L Street, Suite 300
Sacramento, CA 95811
CH2MHILL

CALIFORNIA HIGH-SPEED RAIL AUTHORITY

CALIFORNIA HIGH-SPEED TRAIN PROJECT
SIERRA SUBDIVISION
PACKAGE 1A
ROADWAY
PLAN AND PROFILE
SHAW AVENUE

CONTRACT NO.
DRAWING NO. CV-R1014-GSB-A3
SCALE AS SHOWN
SHEET NO.

lproctor 6/8/2012 12:21:44 PM CAHSRP-R1.TBL CHSR_half_black.plt C:\Documents and Settings\lproctor\My Documents\NDMProj\356751 - California High Speed Rail - SR99 Improvements\15-CV-R1014-GSB-A3.

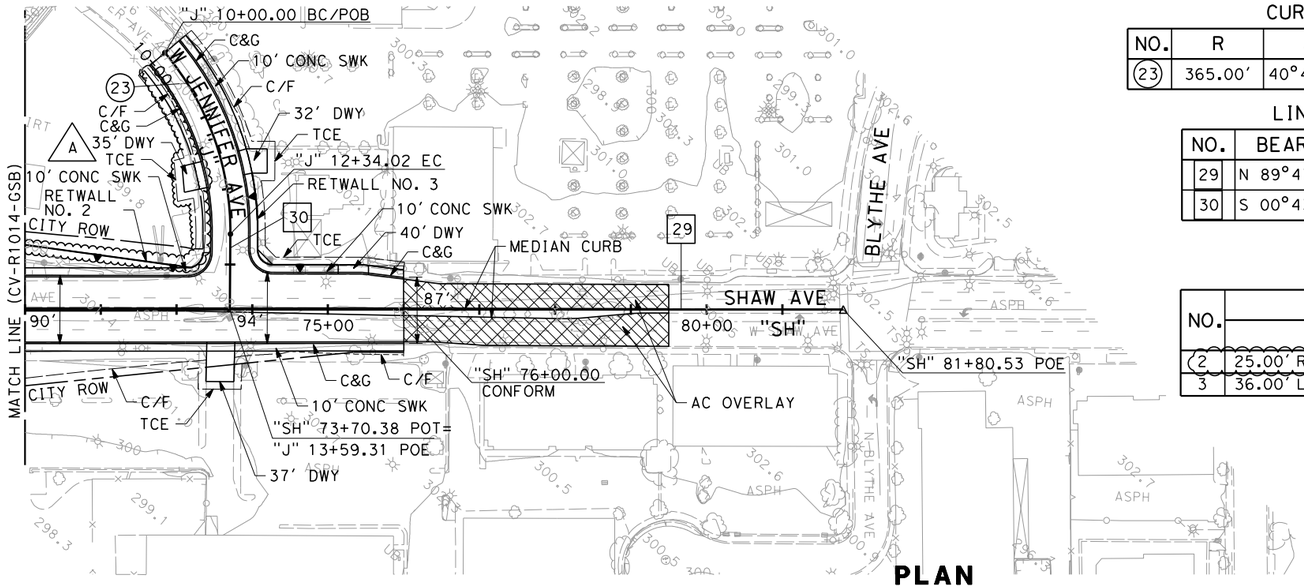

PLAN

CURVE DATA

NO.	R	Δ	T	L
23	365.00'	40°47'18"	135.70'	259.84'

LINE DATA

NO.	BEARING	DISTANCE
29	N 89°47'18" E	2553.12'
30	S 00°43'44" W	99.47'

NOTES:

1. ROW SHOWN REPRESENTS THE MINIMUM ANTICIPATED ROW REQUIREMENTS. ACCURATE ROW AND ACCESS DATA WILL BE MADE AVAILABLE PRIOR TO AWARD.
2. SEE SHEETS CV-R1001-GSB THRU CV-R1011-GSB FOR GOLDEN STATE BLVD.
3. SEE SHEET CV-R1016-GSB FOR CORNELIA AVENUE.

RETAINING WALL DATA

NO.	LOCATIONS BEGIN	LOCATIONS END	LENGTH	MAX HEIGHT
2	25.00' RT "W" 12+53.00	36.00' RT "J" 12+85.00'	685'	17'
3	36.00' LT "J" 11+86.00	59.00' LT "SH" 75+13.40'	220'	2'

A

100 0 100 200
1"=100' HOR
SCALE APPLICABLE FOR FULL SIZE ONLY

10 0 10 20
1"=10' VERT
SCALE APPLICABLE FOR FULL SIZE ONLY

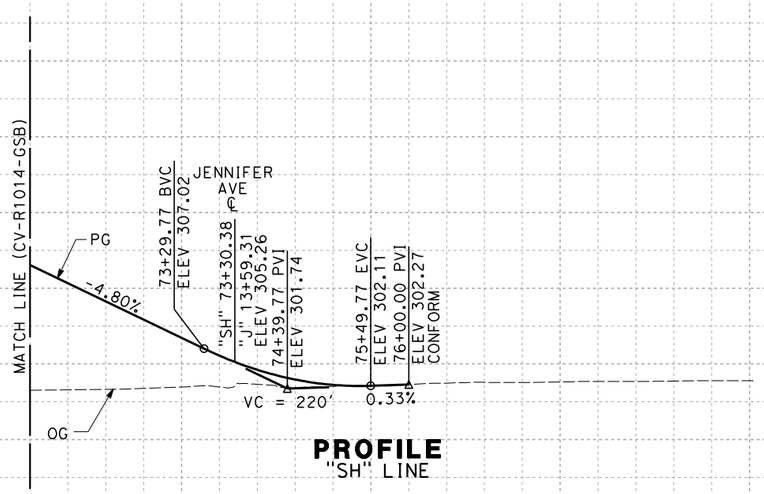

PROFILE
"SH" LINE

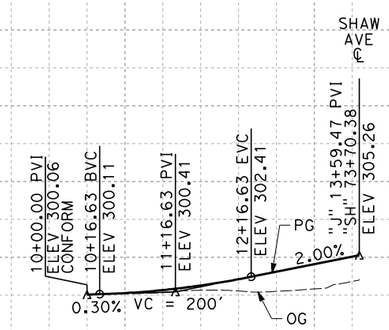

PROFILE
"J" LINE

ADDENDUM 3 - RFP HSR 11-16

06/29/2012 ADDENDUM 3 - RFP HSR 11-16

REV	DATE	BY	CHK	APP	DESCRIPTION
A	2012-06	CC	VC	FN	REVISED FOR ADDENDUM 3

DESIGNED BY V. CHIO
DRAWN BY D. ELKINS
CHECKED BY L. HEUSTON
IN CHARGE F. NOBARI
DATE 2/17/12

PROPOSED PRELIMINARY DESIGN
NOT FOR CONSTRUCTION

AECOM Technical Services, Inc.
2020 L Street, Suite 300
Sacramento, CA 95811
CH2MHILL

CALIFORNIA HIGH-SPEED RAIL AUTHORITY

CALIFORNIA HIGH-SPEED TRAIN PROJECT
SIERRA SUBDIVISION
PACKAGE 1A
ROADWAY
PLAN AND PROFILE
SHAW AVENUE

CONTRACT NO.
DRAWING NO. CV-R1015-GSB
SCALE AS SHOWN
SHEET NO.

6/11/2012 12:38:55 PM CAHSRP-R1.TBL CHSR_half_black-pdf995.pc3 sleong C:\Documents and Settings\sleong\My Documents\NDMProj\356751 - California High Speed Rail - SR99 Improvements\1S-CV-R1015-GSB-A3.dgn

CURVE DATA

NO.	R	Δ	T	L
24	160.00′	44°29′15"	65.44′	124.23′

LINE DATA

NO.	BEARING	DISTANCE
31	S 44°14′32" E	100.95′
32	S 0°14′44" E	1378.77′

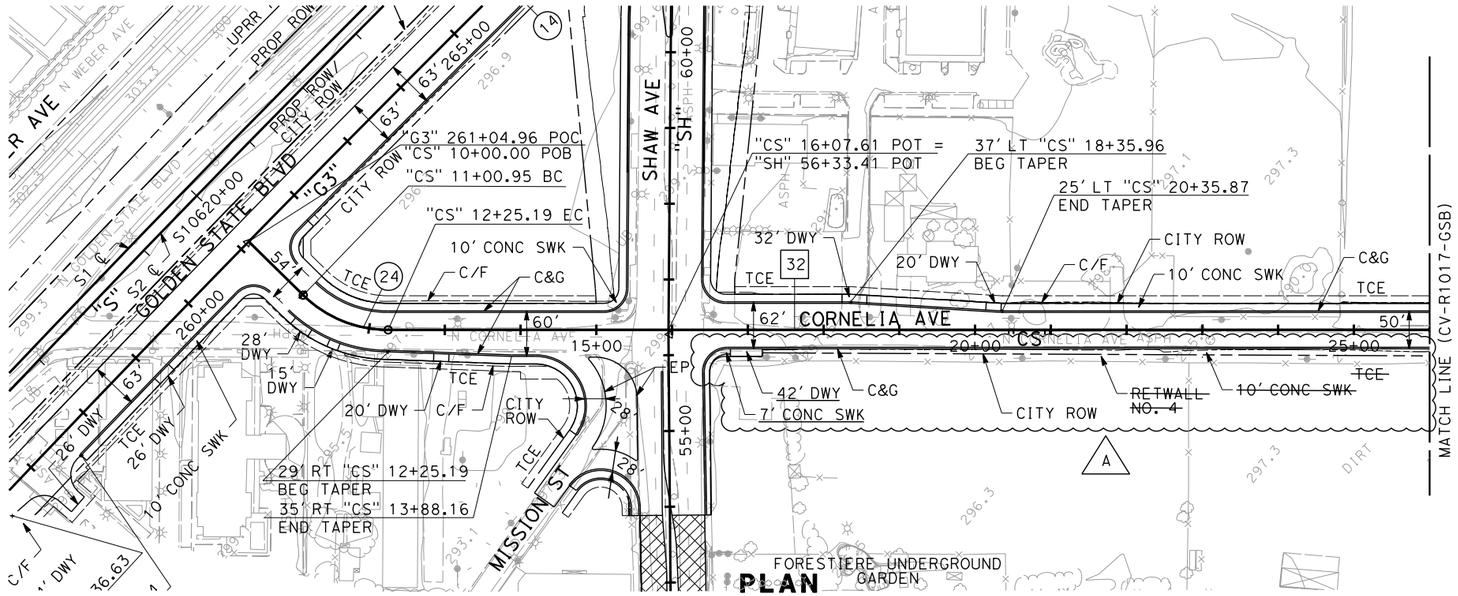

PLAN

NOTES:

1. ROW SHOWN REPRESENTS THE MINIMUM ANTICIPATED ROW REQUIREMENTS. ACCURATE ROW AND ACCESS DATA WILL BE MADE AVAILABLE PRIOR TO AWARD.
2. SEE SHEETS CV-R1001-GSB THRU CV-R1011-GSB FOR GOLDEN STATE BLVD.
3. SEE SHEETS CV-R1014-GSB AND CV-R1015-GSB FOR SHAW AVENUE.

100 0 100 200
1"=100′ HOR
SCALE APPLICABLE FOR FULL SIZE ONLY

10 0 10 20
1"=10′ VERT
SCALE APPLICABLE FOR FULL SIZE ONLY

RETAINING WALL DATA

NO.	LOCATIONS BEGIN	LOCATIONS END	LENGTH	MAX HEIGHT
4	35.00′ RT "CS" 20+90.00	35.00′ RT "CS" 23+00.00	210′	2′

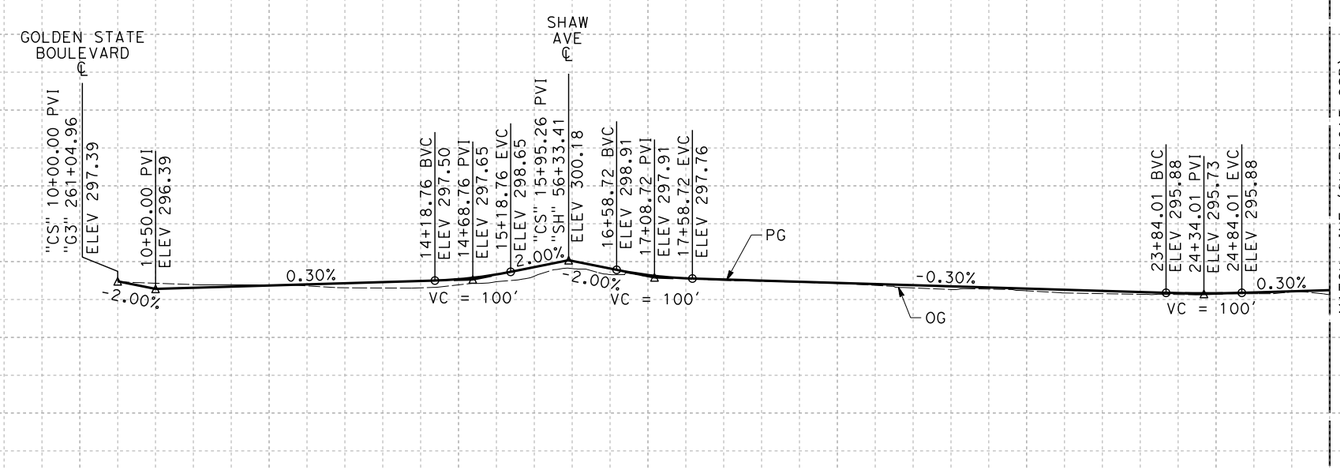

PROFILE
"CS" LINE

ADDENDUM 3 - RFP HSR 11-16

REV	DATE	BY	CHK	APP	DESCRIPTION
A	2012-06	CC	VC	FN	REVISED FOR ADDENDUM 3

DESIGNED BY V. CHIO
DRAWN BY D. ELKINS
CHECKED BY L. HEUSTON
IN CHARGE F. NOBARI
DATE 2/17/12

PROPOSED PRELIMINARY DESIGN
NOT FOR CONSTRUCTION

AECOM Technical Services, Inc.
2020 L Street, Suite 300
Sacramento, CA 95811
CH2MHILL

CALIFORNIA HIGH-SPEED RAIL AUTHORITY

CALIFORNIA HIGH-SPEED TRAIN PROJECT
SIERRA SUBDIVISION
PACKAGE 1A
ROADWAY
PLAN AND PROFILE
CORNELIA AVENUE/SANTA ANA AVENUE

CONTRACT NO.
DRAWING NO. CV-R1016-GSB-A3
SCALE AS SHOWN
SHEET NO.

06/29/2012 ADDENDUM 3 - RFP HSR 11-16

lproctor 6/4/2012 2:57:37 PM CAHSRP-R1.TBL CHSR_half_black.plt C:\Documents and Settings\lproctor\My Documents\NDMProj\356751 - California High Speed Rail - SR99 Improvements\15-CV-R1016-GSB-A3.

CURVE DATA

NO.	R	Δ	T	L
25	319.00′	89°14′16"	314.78′	496.84′
26	200.00′	42°26′19"	77.65′	148.14′

LINE DATA

NO.	BEARING	DISTANCE
33	S 89°29′00" E	1349.41′
34	N 48°00′38" E	24.49′

NOTES:

1. ROW SHOWN REPRESENTS THE MINIMUM ANTICIPATED ROW REQUIREMENTS. ACCURATE ROW AND ACCESS DATA WILL BE MADE AVAILABLE PRIOR TO AWARD.
2. SEE SHEETS CV-R1001-GSB THRU CV-R1011-GSB FOR GOLDEN STATE BLVD.

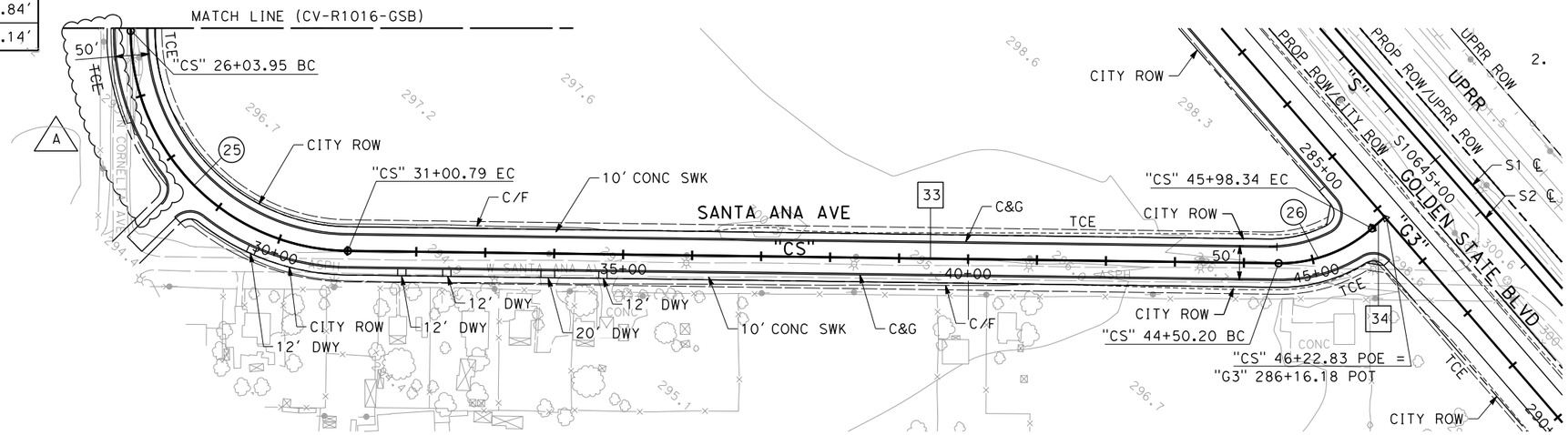

PLAN

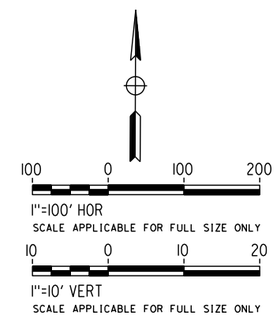

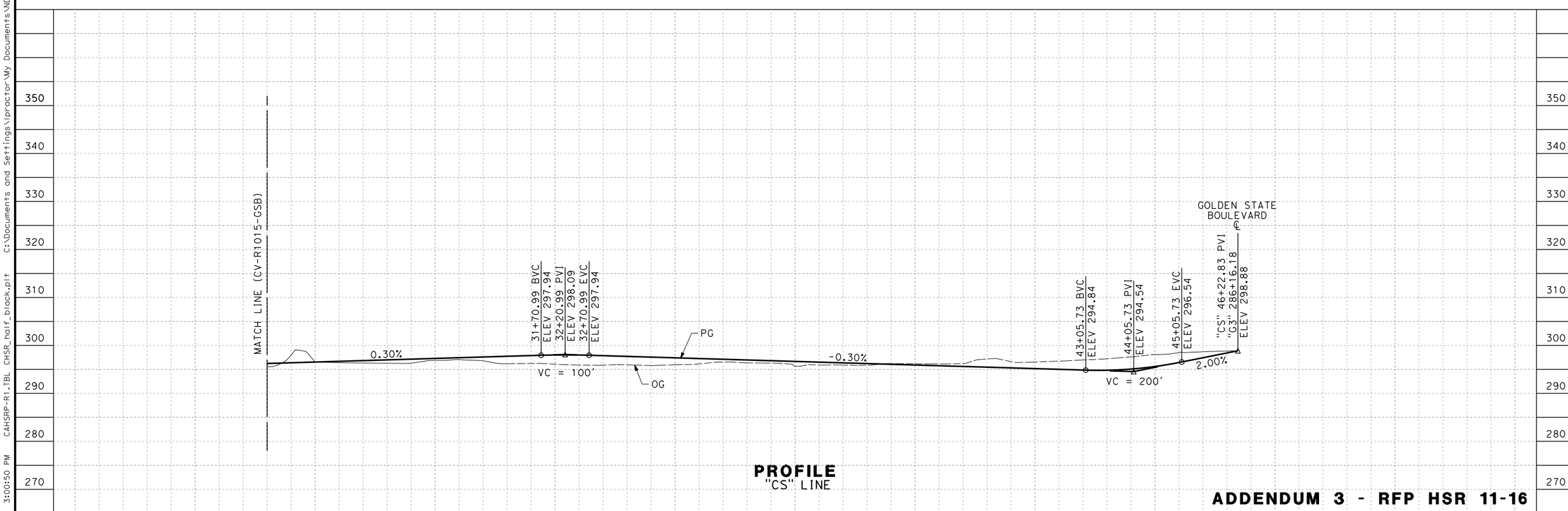

PROFILE
"CS" LINE

ADDENDUM 3 - RFP HSR 11-16

REV	DATE	BY	CHK	APP	DESCRIPTION
A	2012-06	CC	VC	FN	REVISED FOR ADDENDUM 3

DESIGNED BY V. CHIO
DRAWN BY D. ELKINS
CHECKED BY L. HEUSTON
IN CHARGE F. NOBARI
DATE 12/08/11

PROPOSED PRELIMINARY DESIGN

NOT FOR CONSTRUCTION

AECOM Technical Services, Inc.
2020 L Street, Suite 300
Sacramento, CA 95811
CH2MHILL

CALIFORNIA HIGH-SPEED RAIL AUTHORITY

CALIFORNIA HIGH-SPEED TRAIN PROJECT
SIERRA SUBDIVISION
PACKAGE 1A
ROADWAY
PLAN AND PROFILE
CORNELIA AVENUE/SANTA ANA AVENUE

CONTRACT NO.
DRAWING NO. CV-R1017-GSB-A3
SCALE AS SHOWN
SHEET NO.

lproctor 6/4/2012 3:00:50 PM CAHSRP-R1.TBL CHSR_half_black.plt C:\Documents and Settings\lproctor\My Documents\NDMProj\356751 - California High Speed Rail - SR99 Improvements\1S-CV-R1017-GSB-A3.

06/29/2012 ADDENDUM 3 - RFP HSR 11-16

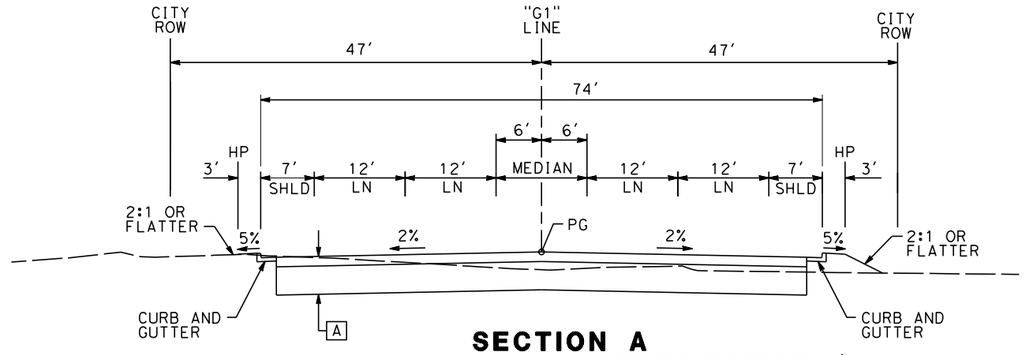

SECTION A

"G1" 100+00 TO ~~104+50~~ 105+59.17 A

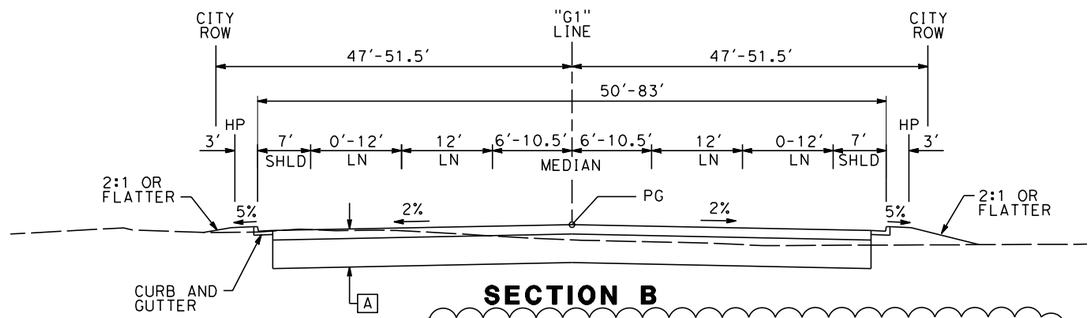

SECTION B

~~"G1" 104+50 TO 107+70~~ "G" 105+59.17 TO 107+75.60
~~"G1" 108+10 TO 113+00~~ "G" 108+05.87 TO 112+91.85 A
"G1" 134+25 TO 136+05 (SEE NOTE 3)
"G1" 136+45 TO 142+09 (SEE NOTE 3)

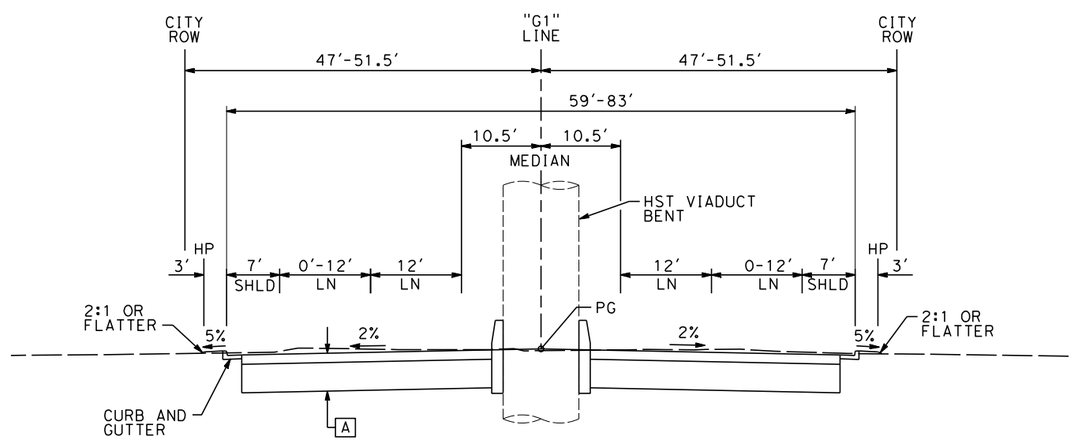

SECTION C

~~"G1" 107+70 TO 108+10~~ "G" 107+75.60 TO 108+05.87 A
~~"G1" 136+05 TO 136+45~~ (SEE NOTE 3)

NOTES:

1. GOLDEN STATE BLVD ULTIMATE STREET WIDTH/CLASSIFICATION SUBJECT TO VERIFICATION.
2. RIGHT OF WAY WIDTH BASED ON CITY OF FRESNO UNDIVIDED COLLECTORS (NEW GROWTH AREA) TYPICAL STREET CROSS-SECTION.
3. EXISTING STORM WATER BASIN ADJACENT TO GOLDEN STATE BLVD TO BE MODIFIED FROM STA 134+00 TO 141+00. SEE GRADING AND DRAINAGE PLANS FOR DETAILS OF MODIFICATIONS

A 0.40' HMA OVER 1.15' AB

B 0.55' HMA OVER 1.45' AB

LIMITS OF AC DIKE	
STREET ALIGNMENT DESIGNATION AND STATION LIMITS	RT EP OR LT EP
"G1" 142+10 TO 160+00	LT
"G1" 142+10 TO 160+00	RT
"G2" 160+00 TO 192+00	LT
"G2" 160+00 TO 188+00	RT
"G3" 192+00 TO 306+00	LT
"G3" 234+20 TO 257+50	RT
"G3" 286+50 TO 305+90	RT

10 0 10 20
1"=10'
SCALE APPLICABLE FOR FULL SIZE ONLY

ADDENDUM 3 - RFP HSR 11-16

06/29/2012 ADDENDUM 3 - RFP HSR 11-16

REV	DATE	BY	CHK	APP	DESCRIPTION
A	2012-06	CC	VC	FN	REVISED FOR ADDENDUM 3

DESIGNED BY V. CHIO
DRAWN BY D. ELKINS
CHECKED BY L. HEUSTON
IN CHARGE F. NOBARI
DATE 2/17/12

PROPOSED PRELIMINARY DESIGN

NOT FOR CONSTRUCTION

AECOM Technical Services, Inc.
2020 L Street, Suite 300
Sacramento, CA 95811
CH2MHILL

CALIFORNIA HIGH-SPEED RAIL AUTHORITY

CALIFORNIA HIGH-SPEED TRAIN PROJECT
SIERRA SUBDIVISION
PACKAGE 1A
ROADWAY
TYPICAL SECTION
GOLDEN STATE BOULEVARD

CONTRACT NO.
DRAWING NO. CV-R3001-GSB
SCALE AS SHOWN
SHEET NO.

sleong 6/8/2012 6:26:32 PM CAHSRP-R1.TBL CHSR_half_black-pdf995.pc4 C:\Documents and Settings\sleong\My Documents\NDMProj\356751 - California High Speed Rail - SR99 Improvements\1S-CV-R3001-GSB-A3.dgn

sleong 6/8/2012 6:28:47 PM CAHSRP-R1.TBL CHSR_half_black-pdf995.pc1 C:\Documents and Settings\sleong\My Documents\NDMProj\356751 - California High Speed Rail - SR99 Improvements\1S-CV-R3002-GSB-A3.dgn

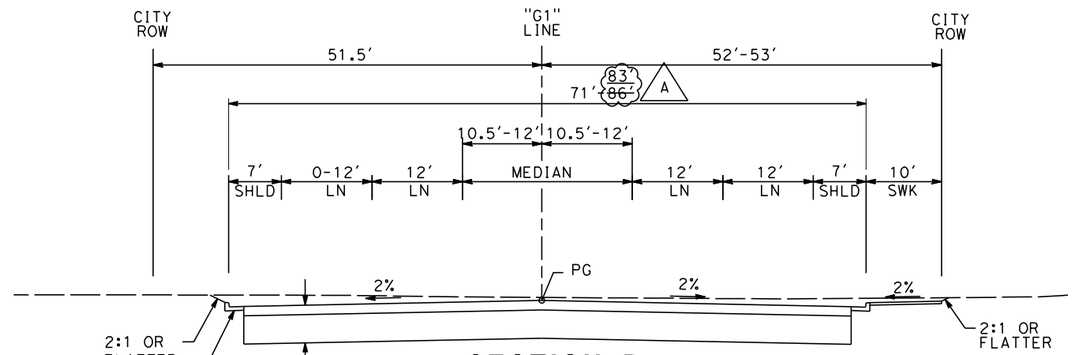

SECTION D

A "G" 112+91.85
~~"G1" 113+00~~ TO 115+45
"G1" 125+00 TO 134+25

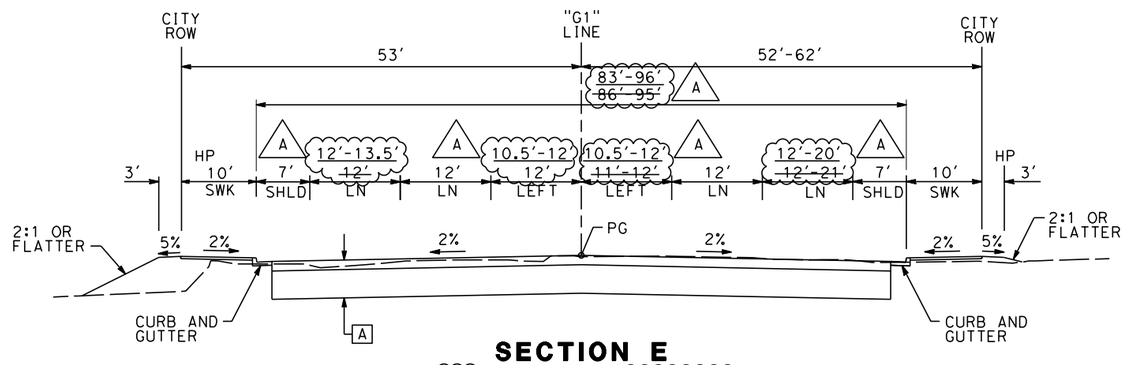

SECTION E

A ~~"G1"~~ "G" 115+45 TO ~~119+09.50~~ 119+02.43 A

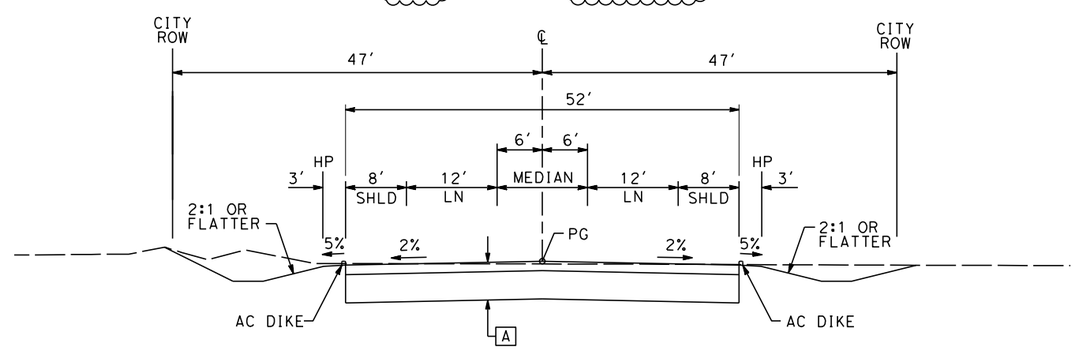

SECTION F

"G1" 142+09 TO 160+00
"G2" 160+00 TO 185+00
"G3" 286+50 TO 303+75

NOTES:

A 0.40' HMA OVER 1.15' AB

B 0.55' HMA OVER 1.45' AB

10 0 10 20
1"=10'
SCALE APPLICABLE FOR FULL SIZE ONLY

ADDENDUM 3 - RFP HSR 11-16

06/29/2012 ADDENDUM 3 - RFP HSR 11-16

REV	DATE	BY	CHK	APP	DESCRIPTION
A	2012-06	CC	VC	FN	REVISED FOR ADDENDUM 3

DESIGNED BY V. CHIO
DRAWN BY D. ELKINS
CHECKED BY L. HEUSTON
IN CHARGE F. NOBARI
DATE 2/17/12

PROPOSED PRELIMINARY DESIGN

NOT FOR CONSTRUCTION

AECOM Technical Services, Inc.
2020 L Street, Suite 300
Sacramento, CA 95811
CH2MHILL

CALIFORNIA HIGH-SPEED RAIL AUTHORITY

CALIFORNIA HIGH-SPEED TRAIN PROJECT
SIERRA SUBDIVISION
PACKAGE 1A
ROADWAY
TYPICAL SECTION
GOLDEN STATE BOULEVARD

CONTRACT NO.
DRAWING NO. CV-R3002-GSB
SCALE AS SHOWN
SHEET NO.

NOTES:

A 0.40' HMA OVER 1.15' AB

B 0.55' HMA OVER 1.45' AB

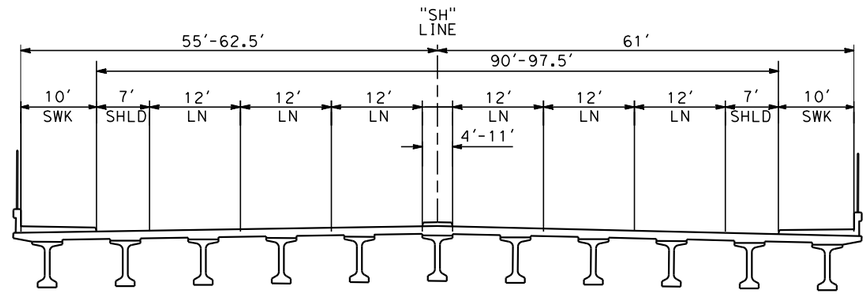

SHAW AVENUE OVERHEAD

SECTION DD

"SH" 61+75 TO 68+00

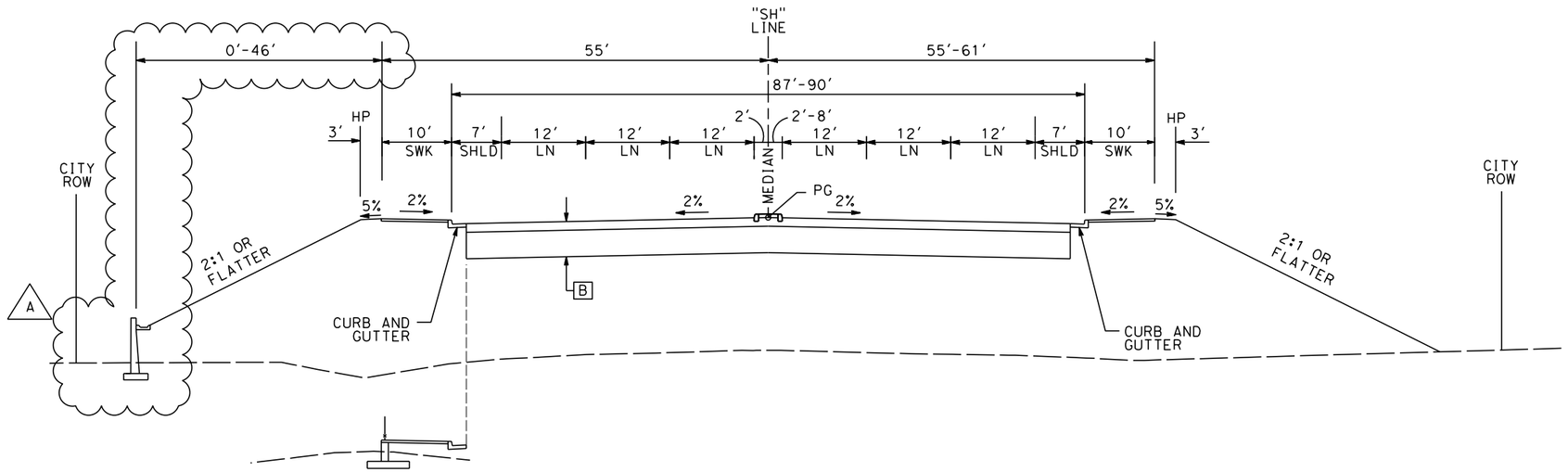

"SH" 74+00 TO 75+00

SECTION EE

"SH" 68+00 TO 76+00

10 0 10 20

1"=10'

SCALE APPLICABLE FOR FULL SIZE ONLY

ADDENDUM 3 - RFP HSR 11-16

06/29/2012 ADDENDUM 3 - RFP HSR 11-16

REV	DATE	BY	CHK	APP	DESCRIPTION
A	2012-06	CC	VC	FN	REVISED FOR ADDENDUM 3

DESIGNED BY V. CHIO
DRAWN BY D. ELKINS
CHECKED BY L. HEUSTON
IN CHARGE F. NOBARI
DATE 2/17/12

PROPOSED PRELIMINARY DESIGN

NOT FOR CONSTRUCTION

AECOM Technical Services, Inc.
2020 L Street, Suite 300
Sacramento, CA 95811
CH2MHILL

CALIFORNIA HIGH-SPEED RAIL AUTHORITY

CALIFORNIA HIGH-SPEED TRAIN PROJECT
SIERRA SUBDIVISION
PACKAGE 1A
ROADWAY
TYPICAL SECTION
SHAW AVENUE

CONTRACT NO.
DRAWING NO. CV-R3007-GSB
SCALE AS SHOWN
SHEET NO.

sleong 6/11/2012 12:46:01 PM CAHSRP-R1.TBL CHSR_half_black-pdf995.pcf C:\Documents and Settings\sleong\My Documents\NDMProj\356751 - California High Speed Rail - SR99 Improvements\1S-CV-R3007-GSB-A3.dgn

lproctor 6/4/2012 2:59:23 PM CAHSRP-R1.TBL CHSR_half_black.plt C:\Documents and Settings\lproctor\My Documents\NDMProj\356751 - California High Speed Rail - SR99 Improvements\1S-CV-R3010-GSB-A3.

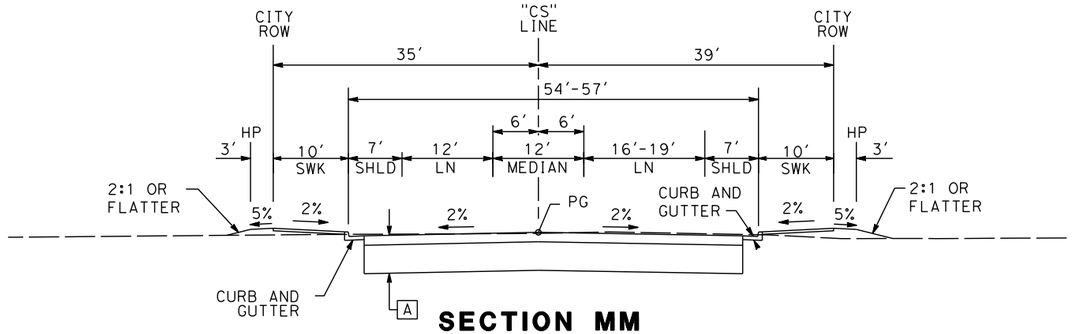

SECTION MM

"CS" 10+40 TO 13+00

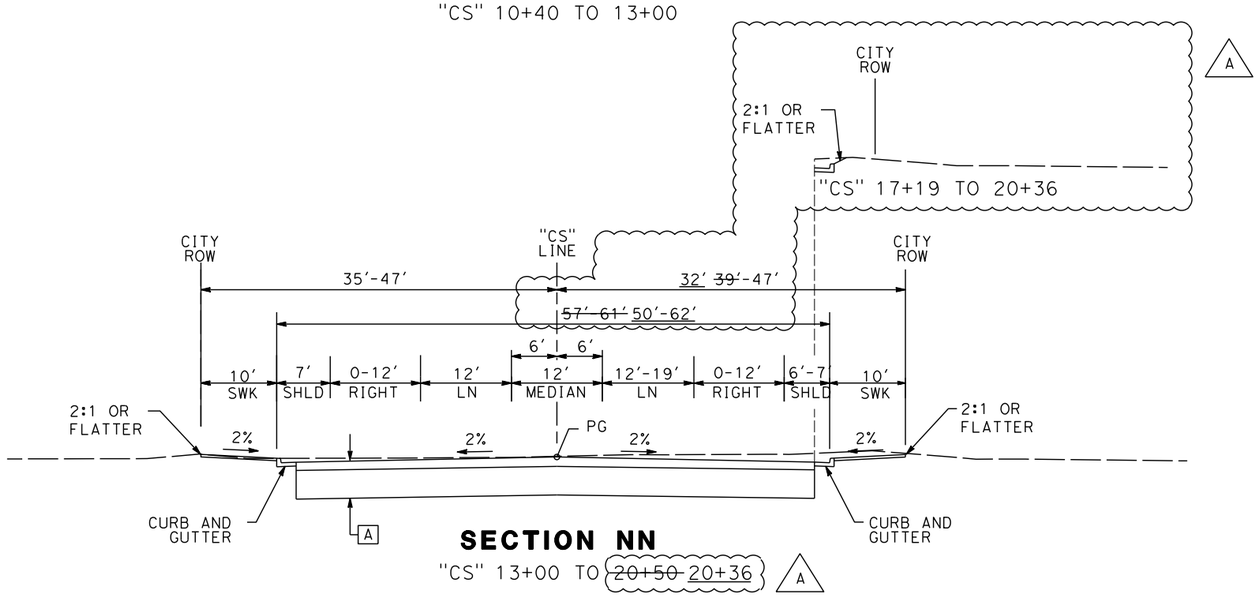

SECTION NN

"CS" 13+00 TO ~~20+50~~ 20+36 A

NOTES:

A 0.40′ HMA OVER 1.15′ AB

B 0.55′ HMA OVER 1.45′ AB

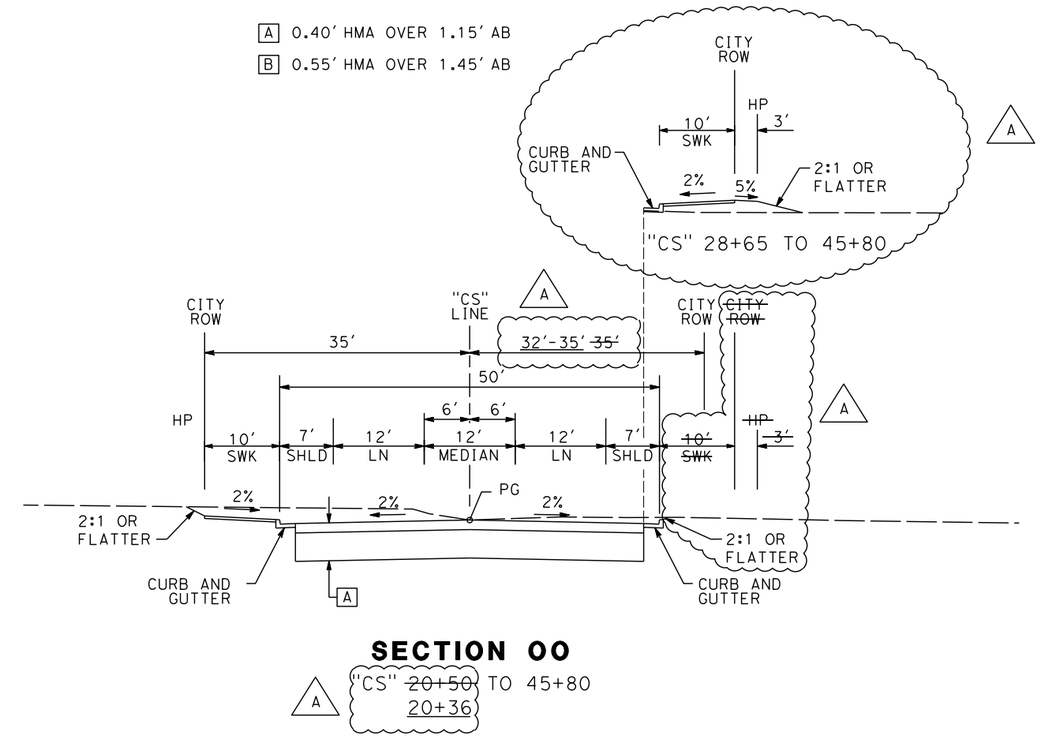

SECTION OO

A "CS" ~~20+50~~ 20+36 TO 45+80

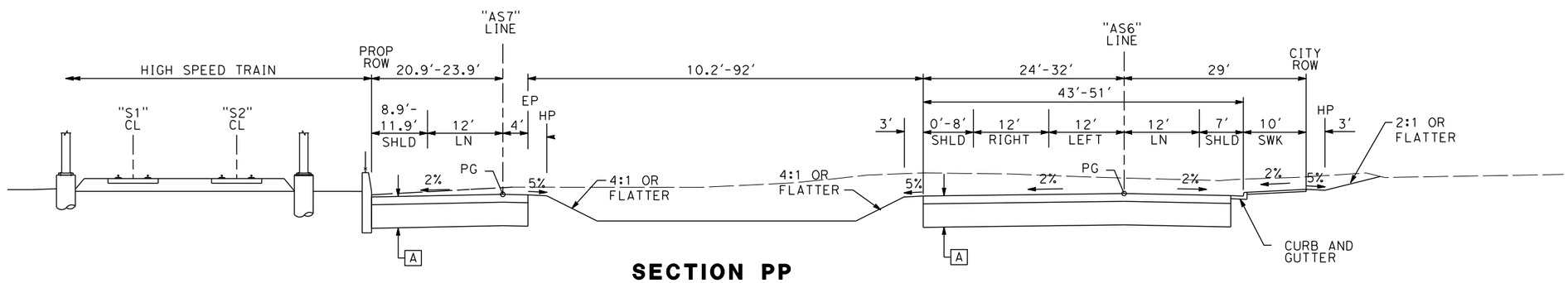

SECTION PP

"AS6" 10+30 TO 11+25
"AS7 12+26 TO 13+96

10 0 10 20

1"=10′

SCALE APPLICABLE FOR FULL SIZE ONLY

ADDENDUM 3 - RFP HSR 11-16

06/29/2012 ADDENDUM 3 - RFP HSR 11-16

REV	DATE	BY	CHK	APP	DESCRIPTION
A	2012-06	CC	VC	FN	REVISED FOR ADDENDUM 3

DESIGNED BY V. CHIO
DRAWN BY D. ELKINS
CHECKED BY L. HEUSTON
IN CHARGE F. NOBARI
DATE 2/17/12

PROPOSED PRELIMINARY DESIGN

NOT FOR CONSTRUCTION

AECOM Technical Services, Inc.
2020 L Street, Suite 300
Sacramento, CA 95811
CH2MHILL

CALIFORNIA HIGH-SPEED RAIL AUTHORITY

CALIFORNIA HIGH-SPEED TRAIN PROJECT
SIERRA SUBDIVISION
PACKAGE 1A
ROADWAY
TYPICAL SECTION
CORNELIA AVENUE AND MOTEL DRIVE

CONTRACT NO.
DRAWING NO. CV-R3010-GSB-A3
SCALE AS SHOWN
SHEET NO.

NOTES:

A 0.40' HMA OVER 1.15' AB

B 0.55' HMA OVER 1.45' AB

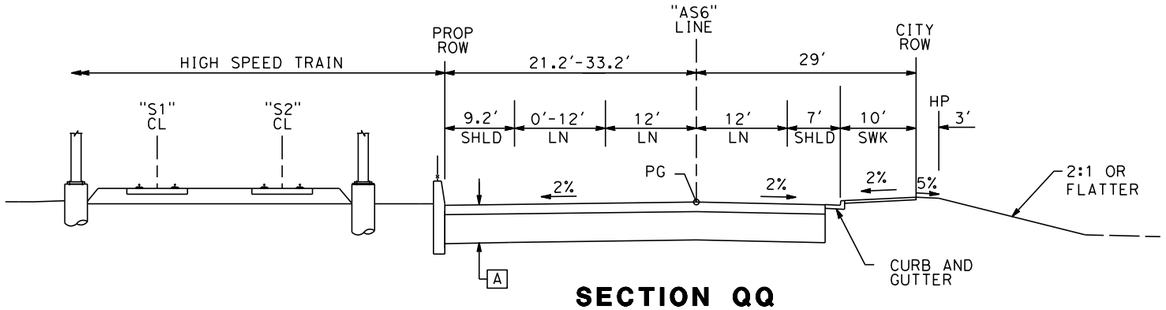

SECTION QQ

"AS6" 11+25 TO 12+25

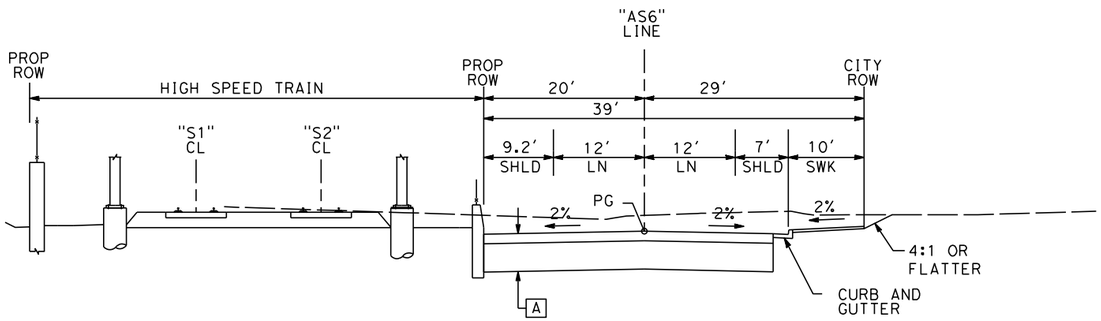

SECTION RR

"AS6" 12+25 TO 13+92

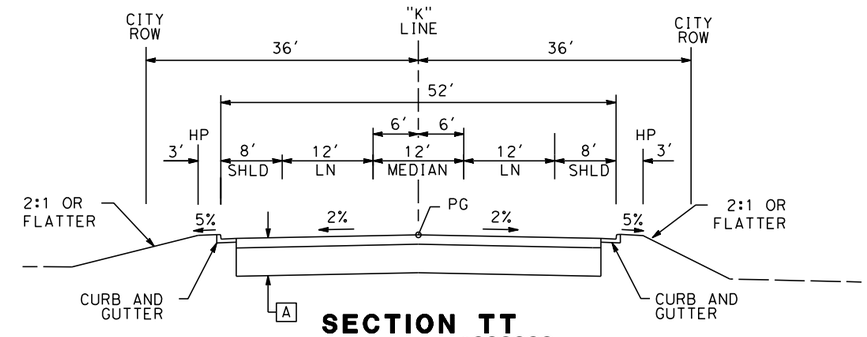

SECTION TT

"K" 10+50 TO ~~12+10~~ 11+90 A

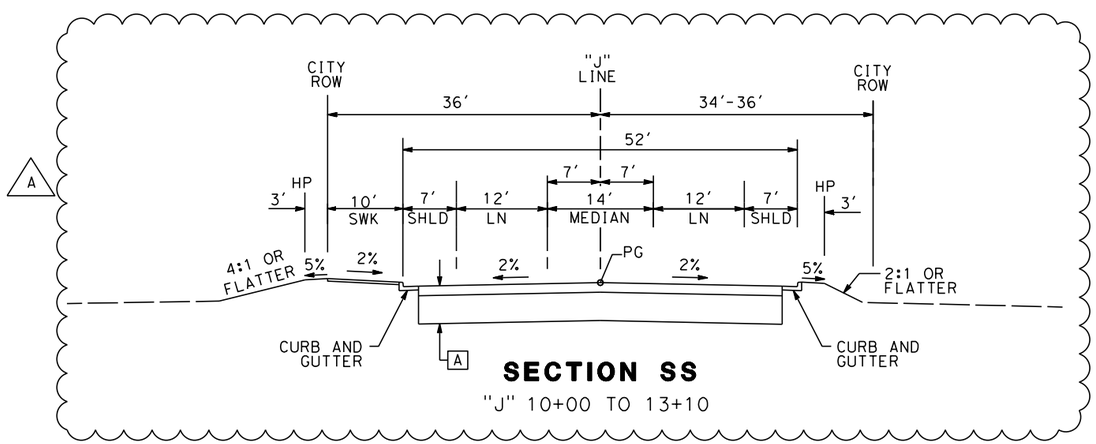

SECTION SS

"J" 10+00 TO 13+10

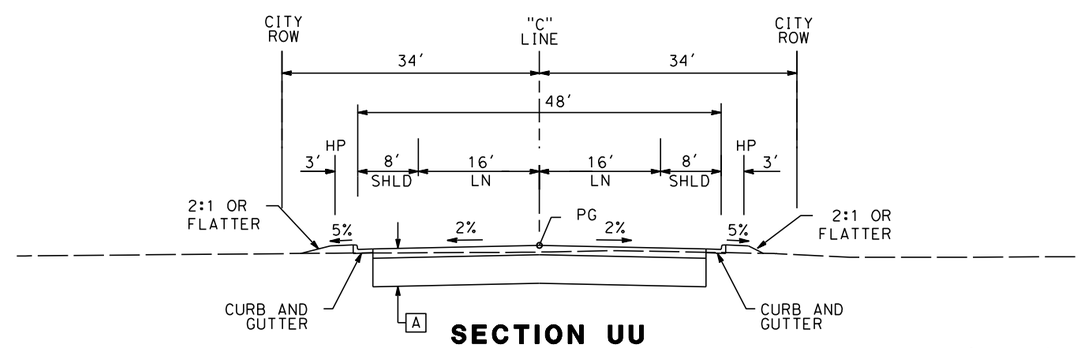

SECTION UU

"B" 10+95 TO 12+50

10 0 10 20

1"=10'

SCALE APPLICABLE FOR FULL SIZE ONLY

ADDENDUM 3 - RFP HSR 11-16

06/29/2012 ADDENDUM 3 - RFP HSR 11-16

REV	DATE	BY	CHK	APP	DESCRIPTION
A	2012-06	CC	VC	FN	REVISED FOR ADDENDUM 3

DESIGNED BY V. CHIO
DRAWN BY D. ELKINS
CHECKED BY L. HEUSTON
IN CHARGE F. NOBARI
DATE 2/17/12

PROPOSED PRELIMINARY DESIGN

NOT FOR CONSTRUCTION

AECOM Technical Services, Inc.
2020 L Street, Suite 300
Sacramento, CA 95811

CH2MHILL

CALIFORNIA HIGH-SPEED RAIL AUTHORITY

CALIFORNIA HIGH-SPEED TRAIN PROJECT
SIERRA SUBDIVISION
PACKAGE 1A
ROADWAY
TYPICAL SECTION
MOTEL, JENNIFER, KATHRYN & BARSTOW

CONTRACT NO.

DRAWING NO. CV-R3011-GSB-A3

SCALE AS SHOWN

SHEET NO.

sleong 6/8/2012 7:35:23 PM CAHSRP-R1.TBL CHSR_half_black-pdf995.pc*Documents and Settings\sleong\My Documents\NDMProj\356751 - California High Speed Rail - SR99 Improvements\1S-CV-R3011-GSB-A3.dgn

LEGEND:

- STAGE 1 CONSTRUCTION
- PREVIOUS CONSTRUCTION
- TEMPORARY PAVEMENT
- DIRECTION OF TRAFFIC
- K-RAIL
- CRASH CUSHION

NOTES:

1. ROW SHOWN REPRESENTS THE MINIMUM ANTICIPATED ROW REQUIREMENTS. ACCURATE ROW AND ACCESS DATA WILL BE MADE AVAILABLE PRIOR TO AWARD.
2. CONSTRUCT THE REALIGNED GOLDEN STATE BLVD OUTSIDE THE EXISTING ROADWAY WHILE MAINTAINING TRAFFIC ON THE EXISTING ROADWAY.
3. CONSTRUCT VETERANS BLVD, BULLARD AVE EXTENSION AND THE VETERANS BLVD OVERCROSSING.
4. ALL DRIVEWAYS AND ACCESS ROADS TO GOLDEN STATE BLVD TO REMAIN OPEN DURING THIS STAGE.
5. CONSTRUCT TEMPORARY PAVEMENT ON THE NORTH SIDE OF SHAW AVE AND MODIFY EXISTING AT-GRADE RAILROAD CROSSING. MAINTAIN ACCESS TO THE EXISTING DRIVEWAYS ALONG SHAW AVE.
6. PROVIDE TEMPORARY ACCESS ROAD TO THE EXISTING W BULLARD AVE WEST OF UPRR.
7. MAINTAIN ACCESS TO ALL ADJACENT PROPERTIES ON CORNELIA AVE AND SANTA ANA AVE DURING CONSTRUCTION.
8. THE INTERSECTION OF SHAW AND CORNELIA AVE WILL BE TEMPORARILY CLOSED DURING CONSTRUCTION AT THE INTERSECTION.

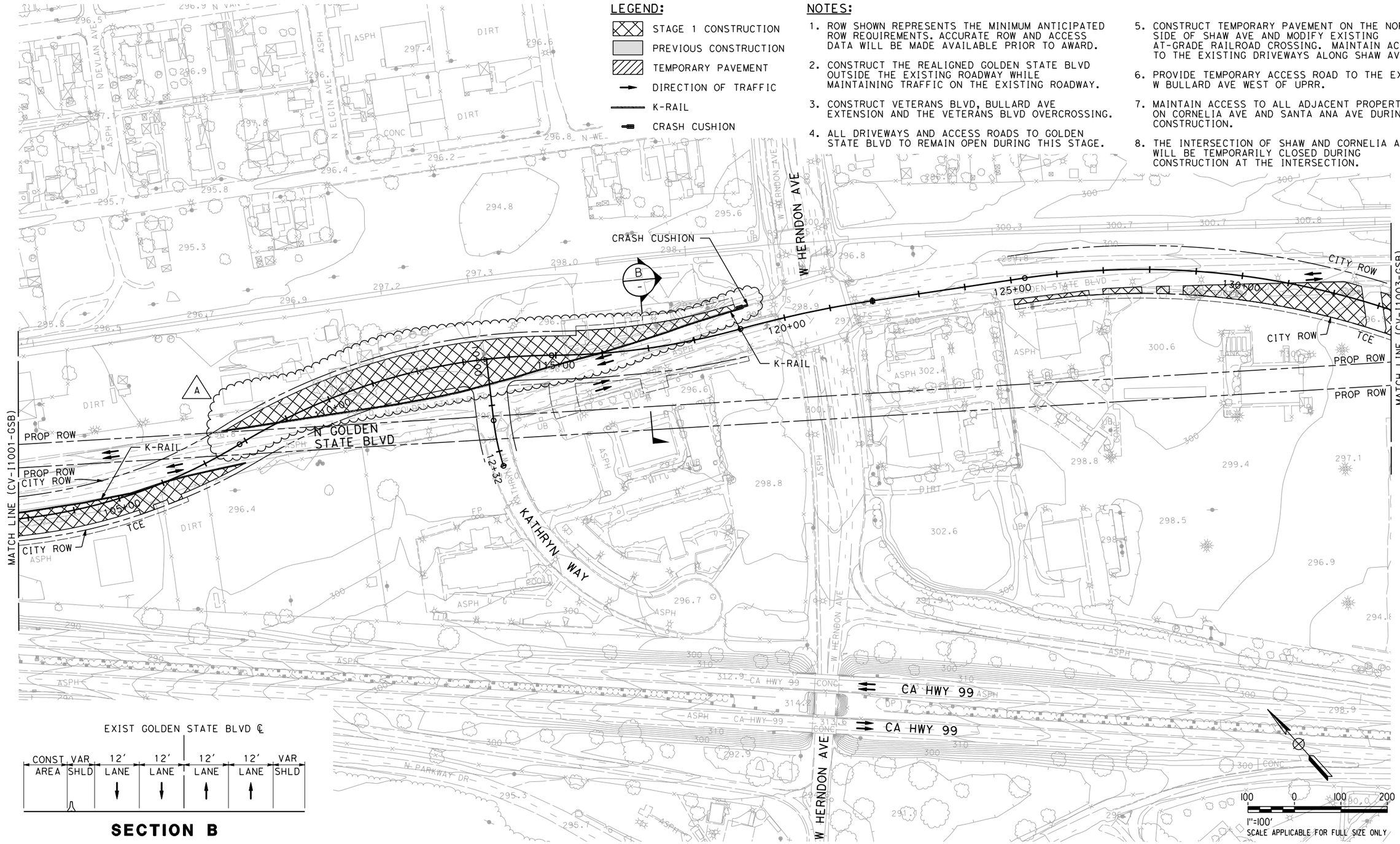

SECTION B

ADDENDUM 3 - RFP HSR 11-16

REV	DATE	BY	CHK	APP	DESCRIPTION
A	2012-06	CC	VC	FN	REVISED FOR ADDENDUM 3

DESIGNED BY V. CHIO
DRAWN BY R. MUNOZ
CHECKED BY L. HEUSTON
IN CHARGE F. NOBARI
DATE 2/17/12

PROPOSED PRELIMINARY DESIGN

NOT FOR CONSTRUCTION

AECOM Technical Services, Inc.
2020 L Street, Suite 300
Sacramento, CA 95811
CH2MHILL

CALIFORNIA HIGH-SPEED RAIL AUTHORITY

CALIFORNIA HIGH-SPEED TRAIN PROJECT
SIERRA SUBDIVISION
PACKAGE 1A
CONSTRUCTION STAGING
STAGE 1
GOLDEN STATE BOULEVARD

CONTRACT NO.
DRAWING NO. CV-I1002-GSB-A3
SCALE AS SHOWN
SHEET NO.

06/29/2012 ADDENDUM 3 - RFP HSR 11-16

6/11/2012 12:36:49 PM CAHSRP-R1.TBL CHSR_half_black-pdf995.pt C:\Documents and Settings\sleong\My Documents\NDMProj\356751 - California High Speed Rail - SR99 Improvements\1S-CV-I1002-GSB-A3.dgn sleong

lproctor 6/4/2012 2:14:10 PM CAHSRP-R1.TBL CHSR_half_black.plt C:\Documents and Settings\lproctor\My Documents\NDMProj\356751 - California High Speed Rail - SR99 Improvements\1S-CV-I1007-GSB-A3.

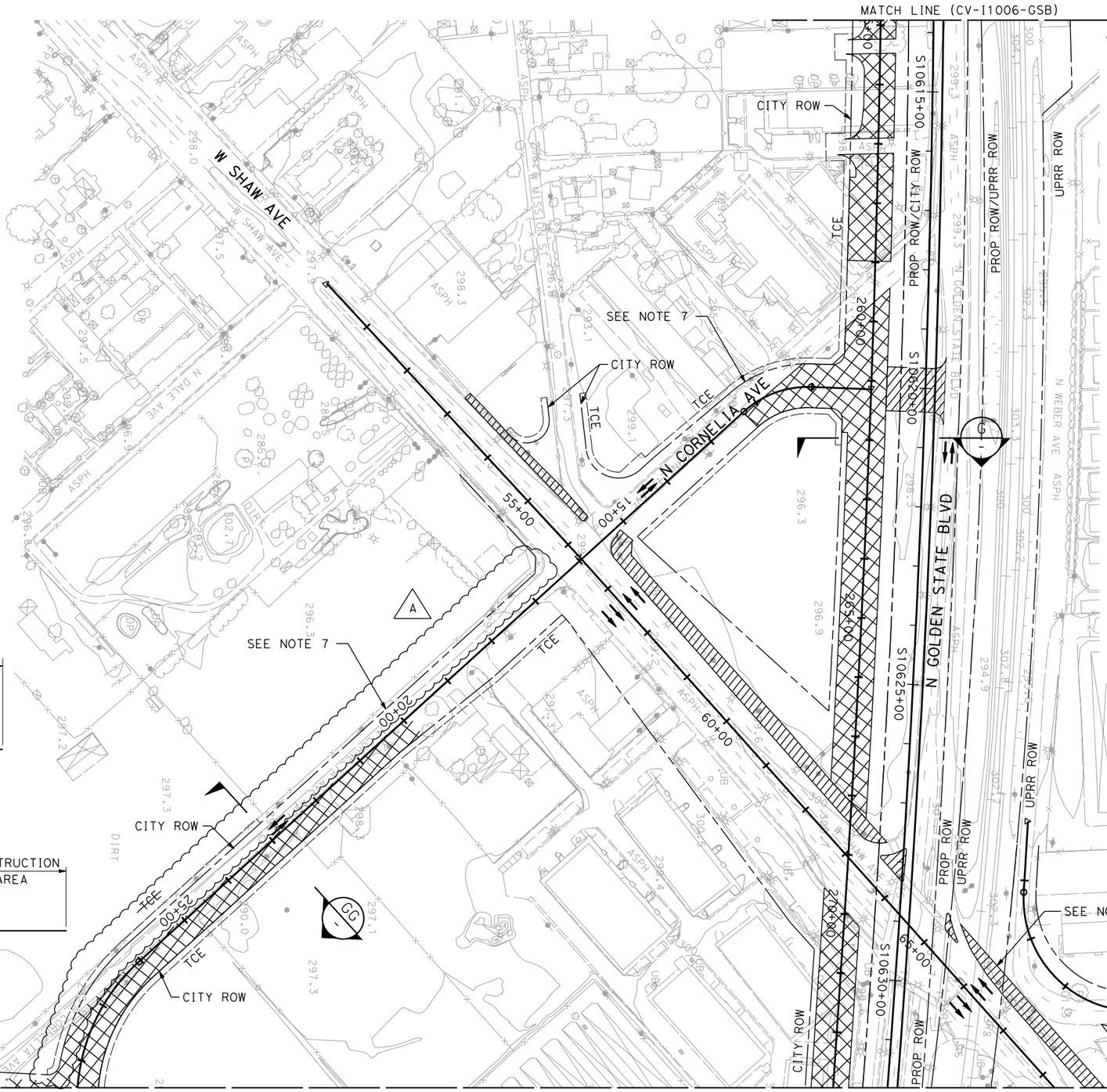

NOTES:

1. ROW SHOWN REPRESENTS THE MINIMUM ANTICIPATED ROW REQUIREMENTS. ACCURATE ROW AND ACCESS DATA WILL BE MADE AVAILABLE PRIOR TO AWARD.
2. CONSTRUCT THE REALIGNED GOLDEN STATE BLVD OUTSIDE THE EXISTING ROADWAY WHILE MAINTAINING TRAFFIC ON THE EXISTING ROADWAY.
3. CONSTRUCT VETERANS BLVD, BULLARD AVE EXTENSION AND THE VETERANS BLVD OVERCROSSING.
4. ALL DRIVEWAYS AND ACCESS ROADS TO GOLDEN STATE BLVD TO REMAIN OPEN DURING THIS STAGE.
5. CONSTRUCT TEMPORARY PAVEMENT ON THE NORTH SIDE OF SHAW AVE AND MODIFY EXISTING AT-GRADE RAILROAD CROSSING. MAINTAIN ACCESS TO THE EXISTING DRIVEWAYS ALONG SHAW AVE.
6. PROVIDE TEMPORARY ACCESS ROAD TO THE EXISTING W BULLARD AVE WEST OF UPRR.
7. MAINTAIN ACCESS TO ALL ADJACENT PROPERTIES ON CORNELIA AVE AND SANTA ANA AVE DURING CONSTRUCTION.
8. EXTEND TRACK PANELS AT THE EXISTING AT-GRADE RAILROAD CROSSING ON SHAW AVE. RELOCATE SIGNAL ARMS TEMPORARILY TO BEYOND THE ROADWAY SHOULDER IN COORDINATION WITH UPRR. OBTAIN THE NECESSARY PERMITS PRIOR TO WORK WITHIN UPRR PROPERTY.

LEGEND:

- STAGE 1 CONSTRUCTION
- PREVIOUS CONSTRUCTION
- TEMPORARY PAVEMENT
- DIRECTION OF TRAFFIC
- K-RAIL
- CRASH CUSHION

100 0 100 200
1"=100'
SCALE APPLICABLE FOR FULL SIZE ONLY

PROPOSED CORNELIA AVE ℄

CONSTRUCTION AREA

10' LANE | 10' LANE

SECTION GG

EXIST GOLDEN STATE BLVD ℄

VAR SHLD | 12' LANE | 12' LANE | 40' OR MORE CONSTRUCTION AREA

SECTION G

ADDENDUM 3 - RFP HSR 11-16

06/29/2012 ADDENDUM 3 - RFP HSR 11-16

REV	DATE	BY	CHK	APP	DESCRIPTION
A	2012-06	CC	VC	FN	REVISED FOR ADDENDUM 3

DESIGNED BY V. CHIO
DRAWN BY R. MUNOZ
CHECKED BY L. HEUSTON
IN CHARGE F. NOBARI
DATE 2/17/12

PROPOSED PRELIMINARY DESIGN

NOT FOR CONSTRUCTION

AECOM Technical Services, Inc.
2020 L Street, Suite 300
Sacramento, CA 95811
CH2MHILL

CALIFORNIA HIGH-SPEED RAIL AUTHORITY

CALIFORNIA HIGH-SPEED TRAIN PROJECT
SIERRA SUBDIVISION
PACKAGE 1A
CONSTRUCTION STAGING
STAGE 1
GOLDEN STATE BOULEVARD

CONTRACT NO.
DRAWING NO. CV-I1007-GSB-A3
SCALE AS SHOWN
SHEET NO.

LEGEND:

- STAGE 2 CONSTRUCTION
- PREVIOUS CONSTRUCTION
- TEMPORARY PAVEMENT
- DIRECTION OF TRAFFIC
- K-RAIL
- CRASH CUSHION

NOTES:

1. ROW SHOWN REPRESENTS THE MINIMUM ANTICIPATED ROW REQUIREMENTS. ACCURATE ROW AND ACCESS DATA WILL BE MADE AVAILABLE PRIOR TO AWARD.
2. CONSTRUCT THE REMAINING PORTION OF THE REALIGNED GOLDEN STATE BLVD AND PAVEMENT AT THE TIE-IN LOCATIONS NEAR HERNDON AVE AND ASHLAN AVE. TRAFFIC TO REMAIN ON THE EXISTING ROADWAY.
3. SHIFT TRAFFIC TO THE NORTH ONTO THE NEWLY CONSTRUCTED PAVEMENT ALONG SHAW AVE. CONSTRUCT THE SOUTHERN HALF OF SHAW AVE, INCLUDING THE SOUTHERN HALF OF THE OVERCROSSING STRUCTURE, WHILE MAINTAINING ACCESS TO THE EXISTING DRIVEWAYS.
4. COORDINATE THE CLOSURE OF GOLDEN STATE BLVD NEAR IT'S INTERSECTIION WITH ASHLAN AVE WITH THE CLOSURE OF ASHLAN AVE.

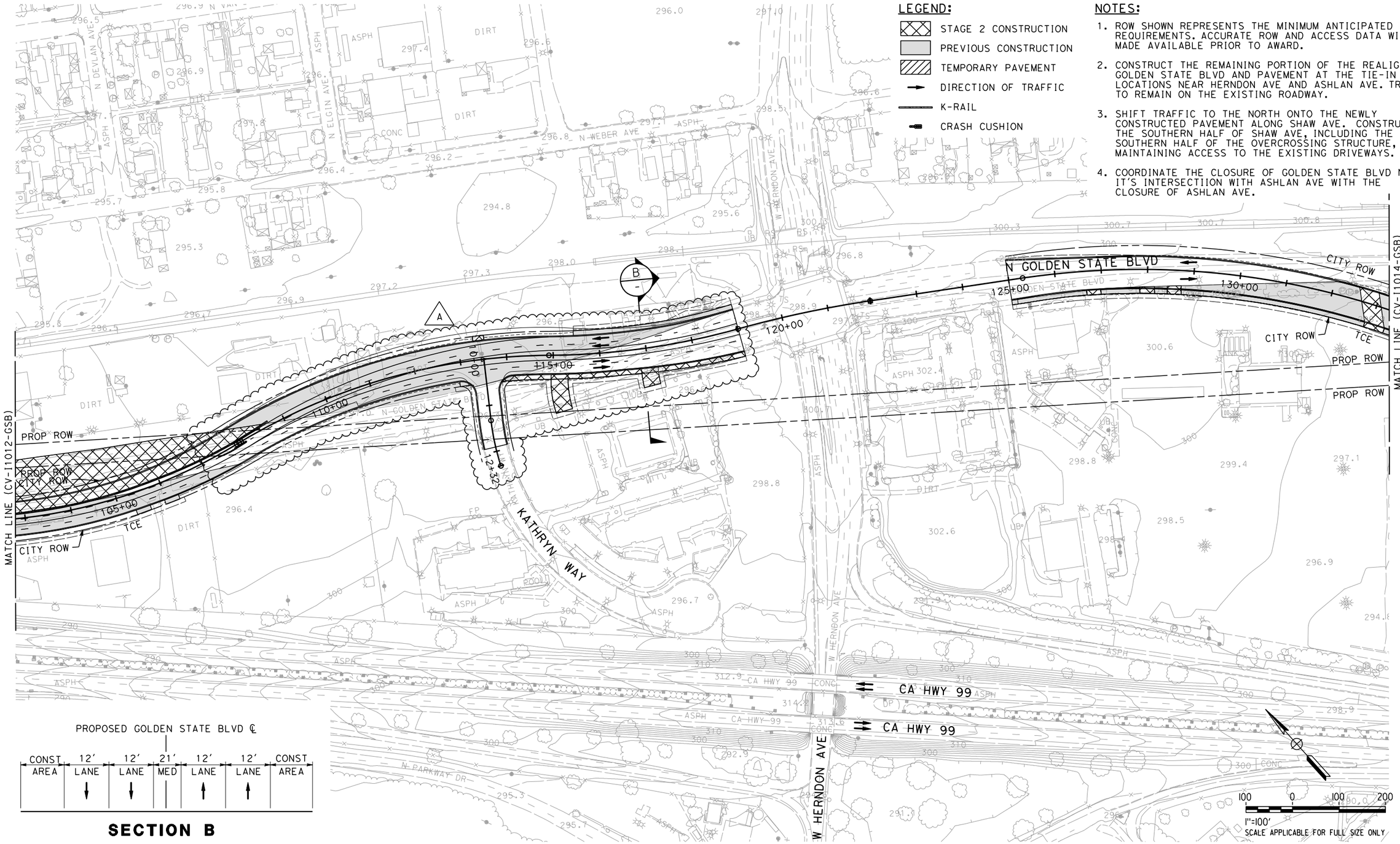

PROPOSED GOLDEN STATE BLVD ℄

CONST AREA	12' LANE	12' LANE	21' MED	12' LANE	12' LANE	CONST AREA

SECTION B

ADDENDUM 3 - RFP HSR 11-16

REV	DATE	BY	CHK	APP	DESCRIPTION
A	2012-06	CC	VC	FN	REVISED FOR ADDENDUM 3

DESIGNED BY V. CHIO
DRAWN BY R. MUNOZ
CHECKED BY L. HEUSTON
IN CHARGE F. NOBARI
DATE 2/17/12

PROPOSED PRELIMINARY DESIGN

NOT FOR CONSTRUCTION

AECOM Technical Services, Inc.
2020 L Street, Suite 300
Sacramento, CA 95811
CH2MHILL

CALIFORNIA HIGH-SPEED RAIL AUTHORITY

CALIFORNIA HIGH-SPEED TRAIN PROJECT
SIERRA SUBDIVISION
PACKAGE 1A
CONSTRUCTION STAGING
STAGE 2
GOLDEN STATE BOULEVARD

CONTRACT NO.
DRAWING NO. CV-I1013-GSB-A3
SCALE AS SHOWN
SHEET NO.

06/29/2012 ADDENDUM 3 - RFP HSR 11-16

sleong 6/8/2012 7:21:55 PM CAHSRP-R1.TBL CHSR_half_black-pdf995.pc3 C:\Documents and Settings\sleong\My Documents\NDMProj\356751 - California High Speed Rail - SR99 Improvements\1S-CV-I1013-GSB-A3.dgn

lproctor 6/4/2012 2:17:31 PM CAHSRP-R1.TBL CHSR_half_black.plt C:\Documents and Settings\lproctor\My Documents\NDMProj\356751 - California High Speed Rail - SR99 Improvements\15-CV-I1018-GSB-A3.

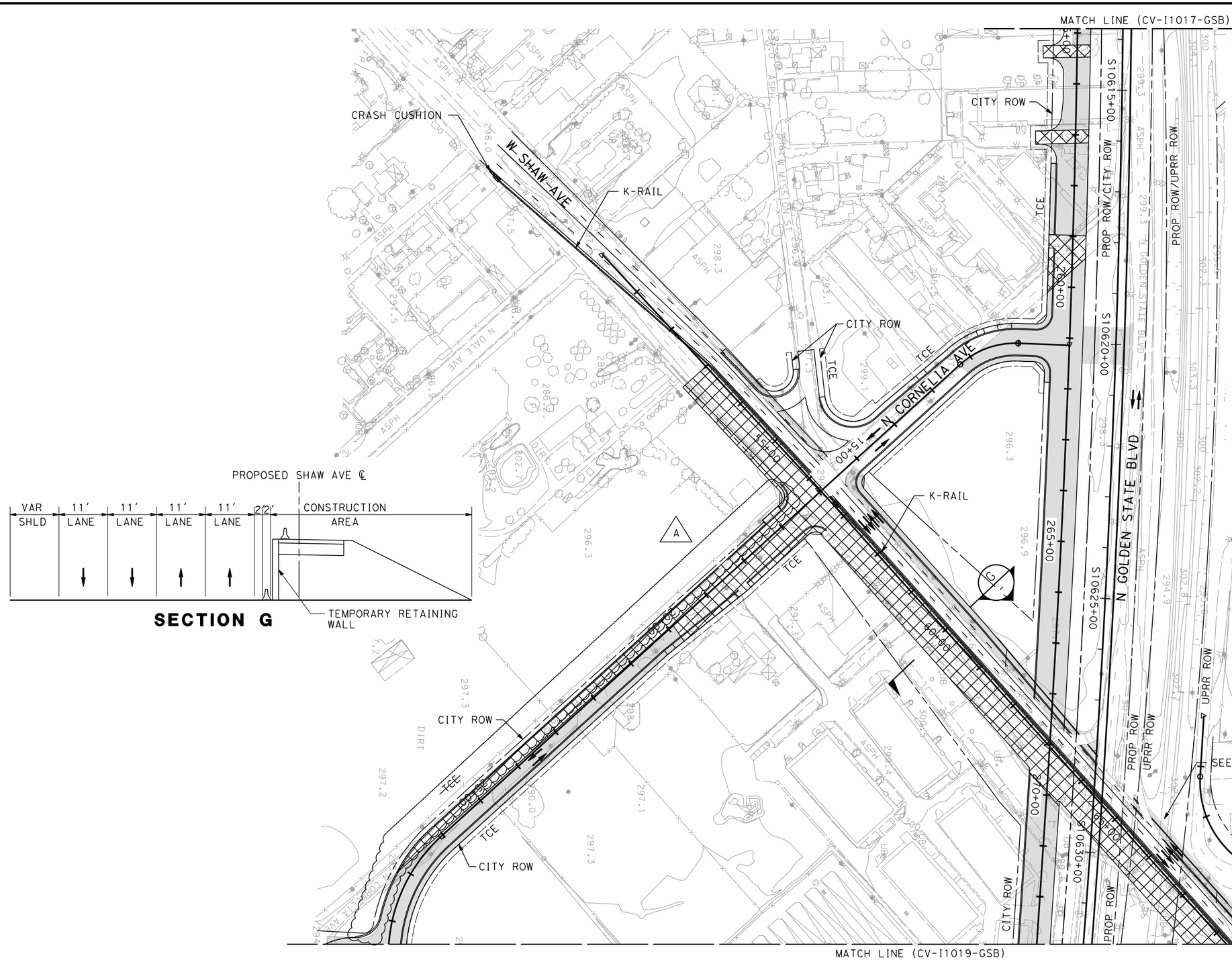

NOTES:

1. ROW SHOWN REPRESENTS THE MINIMUM ANTICIPATED ROW REQUIREMENTS. ACCURATE ROW AND ACCESS DATA WILL BE MADE AVAILABLE PRIOR TO AWARD.
2. CONSTRUCT THE REMAINING PORTION OF THE REALIGNED GOLDEN STATE BLVD AND PAVEMENT AT THE TIE-IN LOCATIONS NEAR HERNDON AVE AND ASHLAN AVE. TRAFFIC TO REMAIN ON THE EXISTING ROADWAY.
3. SHIFT TRAFFIC TO THE NORTH ONTO THE NEWLY CONSTRUCTED PAVEMENT ALONG SHAW AVE. CONSTRUCT THE SOUTHERN HALF OF SHAW AVE, INCLUDING THE SOUTHERN HALF OF THE OVERCROSSING STRUCTURE, WHILE MAINTAINING ACCESS TO THE EXISTING DRIVEWAYS.
4. COORDINATE THE CLOSURE OF GOLDEN STATE BLVD NEAR IT'S INTERSECTIION WITH ASHLAN AVE WITH THE CLOSURE OF ASHLAN AVE.
5. PROVIDE OPENINGS ALONG THE K-RAIL TO ACCOMMODATE UPRR OPERATIONS AT THE RAILROAD CROSSING

LEGEND:

- STAGE 2 CONSTRUCTION
- PREVIOUS CONSTRUCTION
- TEMPORARY PAVEMENT
- DIRECTION OF TRAFFIC
- K-RAIL
- CRASH CUSHION

ADDENDUM 3 - RFP HSR 11-16

06/29/2012 ADDENDUM 3 - RFP HSR 11-16

REV	DATE	BY	CHK	APP	DESCRIPTION
A	2012-06	CC	VC	FN	REVISED FOR ADDENDUM 3

DESIGNED BY V. CHIO
DRAWN BY R. MUNOZ
CHECKED BY L. HEUSTON
IN CHARGE F. NOBARI
DATE 2/17/12

PROPOSED PRELIMINARY DESIGN

NOT FOR CONSTRUCTION

AECOM Technical Services, Inc.
2020 L Street, Suite 300
Sacramento, CA 95811
CH2MHILL

CALIFORNIA HIGH-SPEED RAIL AUTHORITY

CALIFORNIA HIGH-SPEED TRAIN PROJECT
SIERRA SUBDIVISION
PACKAGE 1A
CONSTRUCTION STAGING
STAGE 2
GOLDEN STATE BOULEVARD

CONTRACT NO.
DRAWING NO. CV-I1018-GSB-A3
SCALE AS SHOWN
SHEET NO.

lproctor 6/4/2012 3:07:10 PM CAHSRP-R1.TBL CHSR_half_black.plt C:\Documents and Settings\lproctor\My Documents\NDMProj\356751 - California High Speed Rail - SR99 Improvements\15-CV-I1022-GSB-A3.

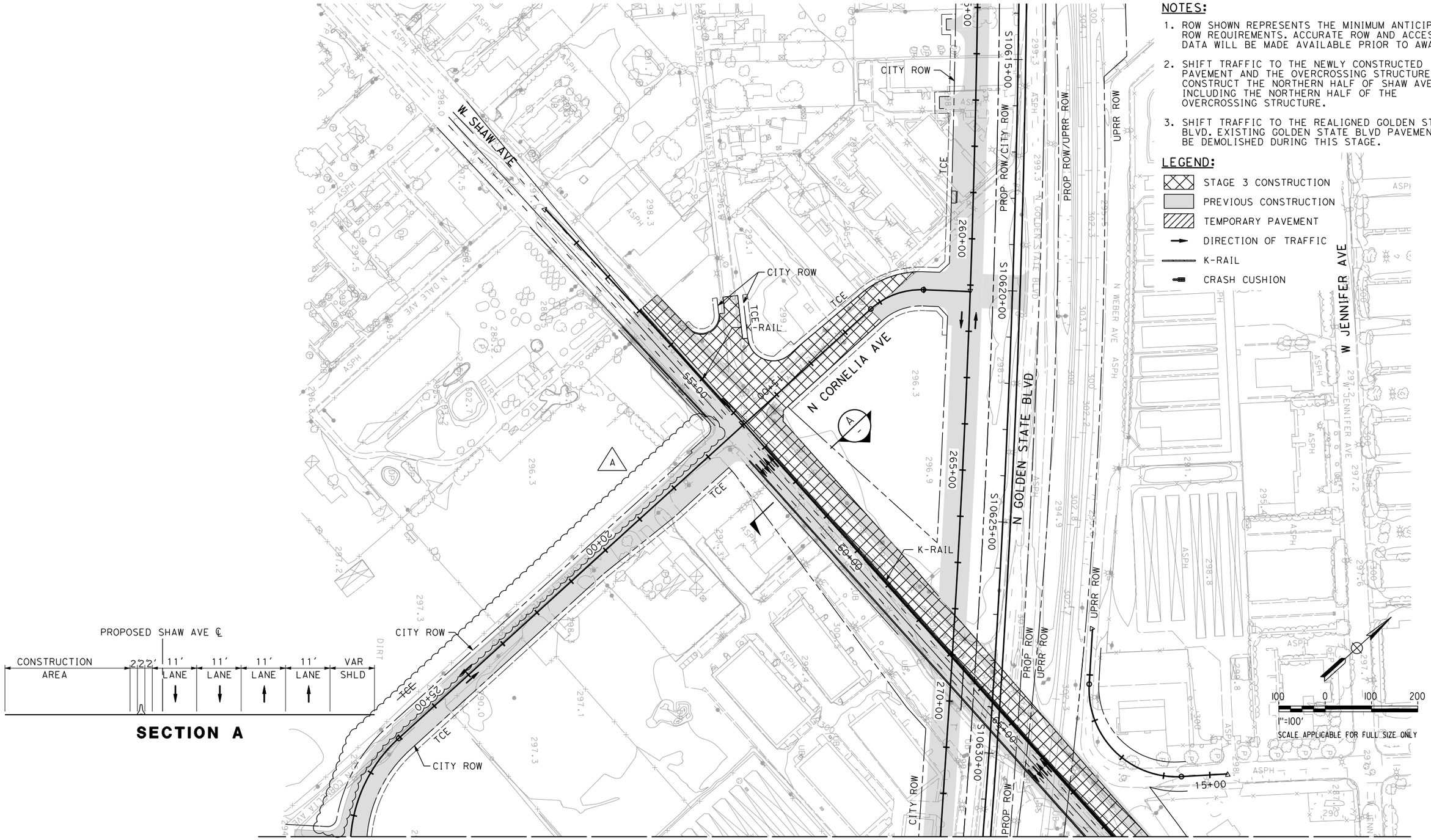

NOTES:

1. ROW SHOWN REPRESENTS THE MINIMUM ANTICIPATED ROW REQUIREMENTS. ACCURATE ROW AND ACCESS DATA WILL BE MADE AVAILABLE PRIOR TO AWARD.
2. SHIFT TRAFFIC TO THE NEWLY CONSTRUCTED PAVEMENT AND THE OVERCROSSING STRUCTURE. CONSTRUCT THE NORTHERN HALF OF SHAW AVE, INCLUDING THE NORTHERN HALF OF THE OVERCROSSING STRUCTURE.
3. SHIFT TRAFFIC TO THE REALIGNED GOLDEN STATE BLVD. EXISTING GOLDEN STATE BLVD PAVEMENT TO BE DEMOLISHED DURING THIS STAGE.

LEGEND:

- STAGE 3 CONSTRUCTION
- PREVIOUS CONSTRUCTION
- TEMPORARY PAVEMENT
- DIRECTION OF TRAFFIC
- K-RAIL
- CRASH CUSHION

ADDENDUM 3 - RFP HSR 11-16

06/29/2012 ADDENDUM 3 - RFP HSR 11-16

REV	DATE	BY	CHK	APP	DESCRIPTION
A	2012-06	CC	VC	FN	REVISED FOR ADDENDUM 3

DESIGNED BY V. CHIO
DRAWN BY R. MUNOZ
CHECKED BY L. HEUSTON
IN CHARGE F. NOBARI
DATE 2/17/12

PROPOSED PRELIMINARY DESIGN

NOT FOR CONSTRUCTION

AECOM Technical Services, Inc.
2020 L Street, Suite 300
Sacramento, CA 95811
CH2MHILL

CALIFORNIA HIGH-SPEED RAIL AUTHORITY

CALIFORNIA HIGH-SPEED TRAIN PROJECT
SIERRA SUBDIVISION
PACKAGE 1A
CONSTRUCTION STAGING
STAGE 3
GOLDEN STATE BOULEVARD

CONTRACT NO.
DRAWING NO. CV-I1022-GSB-A3
SCALE AS SHOWN
SHEET NO.

NOTES:

1. ROW SHOWN REPRESENTS THE MINIMUM ANTICIPATED ROW REQUIREMENTS. ACCURATE ROW AND ACCESS DATA WILL BE MADE AVAILABLE PRIOR TO AWARD.
2. GRADING OF EXISTING BASIN MAY BE MODIFIED TO TIE-IN TO BASIN RELOCATION. MODIFICATIONS MUST BE COORDINATED WITH FMFCD.
3. BASIN AREA AND VOLUME REMOVED COMPRISE IMPACTS TO FMFCD FACILITIES THAT SHALL BE MITIGATED AS PART OF THIS CONTRACT PER SPECIFICATIONS.

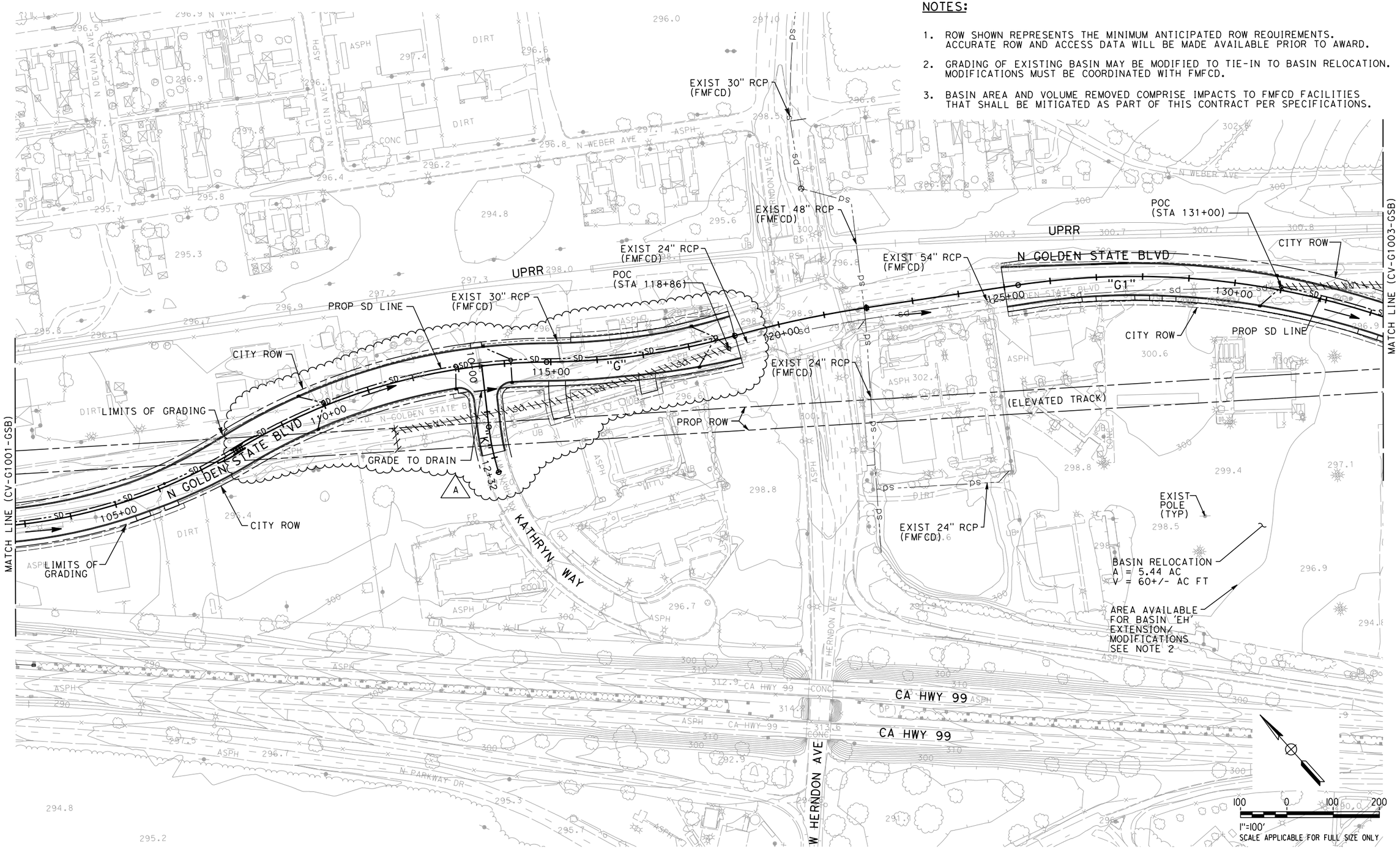

ADDENDUM 3 - RFP HSR 11-16

REV	DATE	BY	CHK	APP	DESCRIPTION
A	2012-06	DE	VC	FN	REVISED FOR ADDENDUM 3

DESIGNED BY M. RANDALL
DRAWN BY J. TYLER
CHECKED BY R. HENDERSON
IN CHARGE F. NOBARI
DATE 2/17/12

PROPOSED PRELIMINARY DESIGN

NOT FOR CONSTRUCTION

AECOM Technical Services, Inc.
2020 L Street, Suite 300
Sacramento, CA 95811
CH2MHILL

CALIFORNIA HIGH-SPEED RAIL AUTHORITY

CALIFORNIA HIGH-SPEED TRAIN PROJECT
SIERRA SUBDIVISION
PACKAGE 1A
ROADWAY
GRADING AND DRAINAGE PLAN
GOLDEN STATE BOULEVARD

CONTRACT NO.
DRAWING NO. CV-G1002-GSB
SCALE AS SHOWN
SHEET NO.

06/29/2012 ADDENDUM 3 - RFP HSR 11-16

sleong 6/12/2012 11:24:17 AM CAHSRP-R1.TBL CHSR_half_black-pdf995.pmp C:\Documents and Settings\sleong\My Documents\NDMProj\356751 - California High Speed Rail - SR99 Improvements\1S-CV-G1002-GSB-A3.dgn

NOTE:

1. ROW SHOWN REPRESENTS THE MINIMUM ANTICIPATED ROW REQUIREMENTS. ACCURATE ROW AND ACCESS DATA WILL BE MADE AVAILABLE PRIOR TO AWARD.

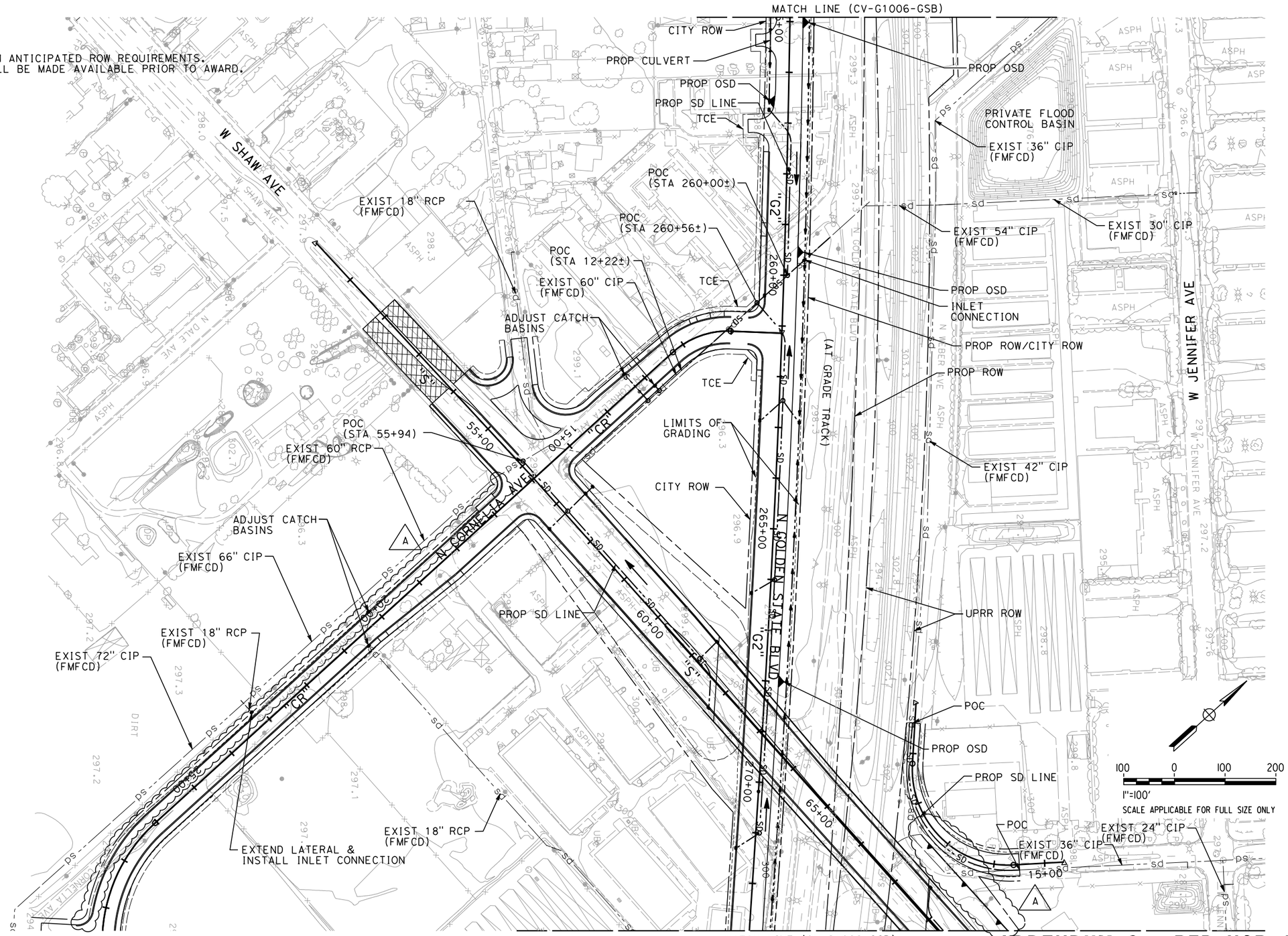

ADDENDUM 3 - RFP HSR 11-16

06/29/2012 ADDENDUM 3 - RFP HSR 11-16

REV	DATE	BY	CHK	APP	DESCRIPTION
A	2012-06	CC	VC	FN	REVISED FOR ADDENDUM 3

DESIGNED BY M. RANDALL
DRAWN BY J. TYLER
CHECKED BY R. HENDERSON
IN CHARGE F. NOBARI
DATE 2/17/12

PROPOSED PRELIMINARY DESIGN

NOT FOR CONSTRUCTION

AECOM Technical Services, Inc.
2020 L Street, Suite 300
Sacramento, CA 95811
CH2MHILL

CALIFORNIA HIGH-SPEED RAIL AUTHORITY

CALIFORNIA HIGH-SPEED TRAIN PROJECT
SIERRA SUBDIVISION
PACKAGE 1A
ROADWAY
GRADING AND DRAINAGE PLAN
GOLDEN STATE BOULEVARD

CONTRACT NO.
DRAWING NO. CV-G1007-GSB-A3
SCALE AS SHOWN
SHEET NO.

sleong 6/12/2012 2:18:16 PM CAHSRP-R1.TBL CHSR_half_black-pdf995.pc3 C:\Documents and Settings\sleong\My Documents\NDMProj\356751 - California High Speed Rail - SR99 Improvements\1S-CV-G1007-GSB-A3.dgn

NOTES:

1. ROW SHOWN REPRESENTS THE MINIMUM ANTICIPATED ROW REQUIREMENTS. ACCURATE ROW AND ACCESS DATA WILL BE MADE AVAILABLE PRIOR TO AWARD.
2. PROVIDE DIRECT CONNECTION TO PRIVATE STORM DRAIN AT BASIN.

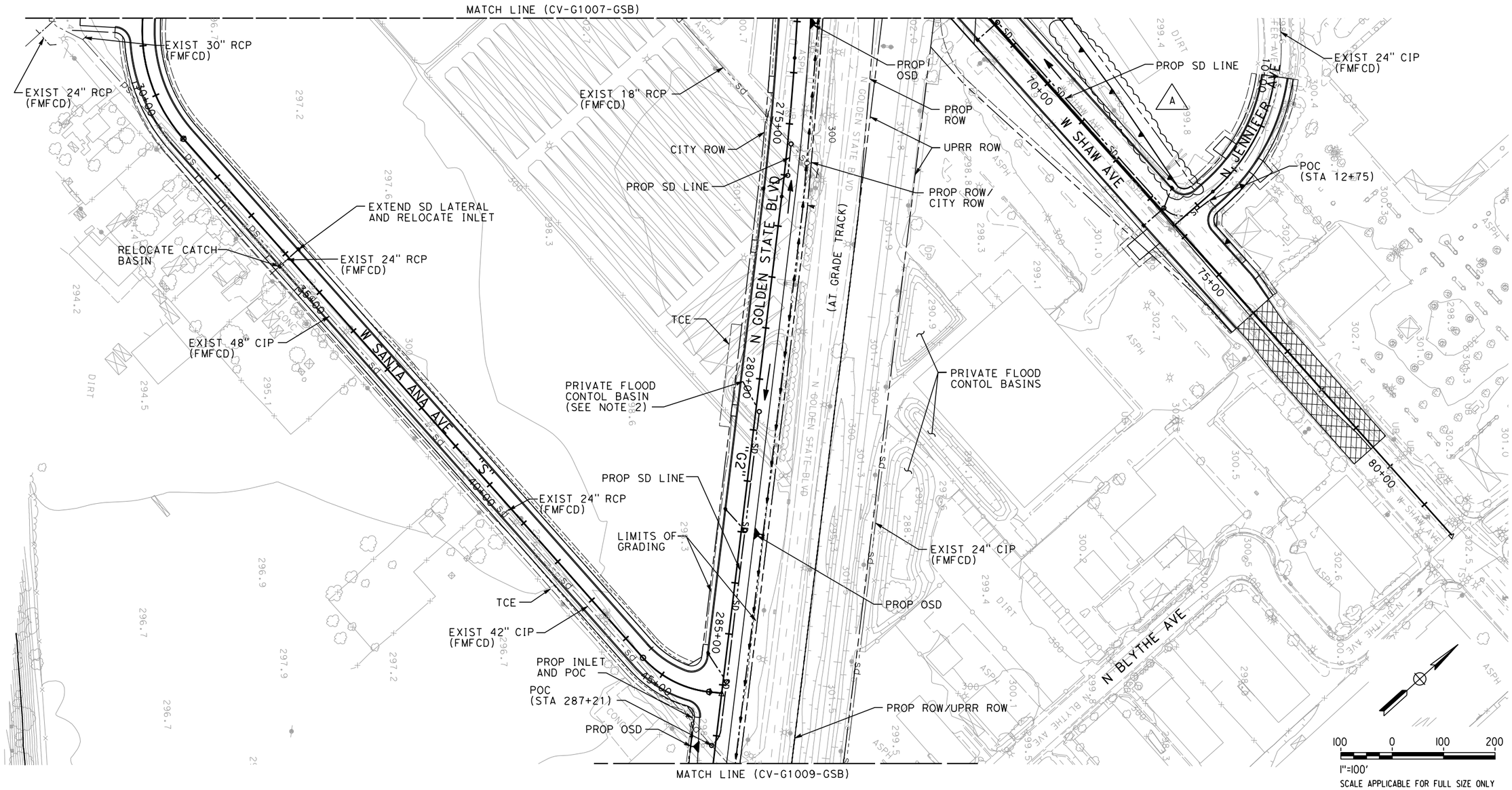

ADDENDUM 3 - RFP HSR 11-16

REV	DATE	BY	CHK	APP	DESCRIPTION
A	2012-06	CC	VC	FN	REVISED FOR ADDENDUM 3

DESIGNED BY M. RANDALL
DRAWN BY J. TYLER
CHECKED BY R. HENDERSON
IN CHARGE F. NOBARI
DATE 2/17/12

PROPOSED PRELIMINARY DESIGN

NOT FOR CONSTRUCTION

AECOM Technical Services, Inc.
2020 L Street, Suite 300
Sacramento, CA 95811
CH2MHILL

CALIFORNIA HIGH-SPEED RAIL AUTHORITY

CALIFORNIA HIGH-SPEED TRAIN PROJECT
SIERRA SUBDIVISION
PACKAGE 1A
ROADWAY
GRADING AND DRAINAGE PLAN
GOLDEN STATE BOULEVARD

CONTRACT NO.
DRAWING NO. CV-G1008-GSB-A3
SCALE AS SHOWN
SHEET NO.

06/29/2012 ADDENDUM 3 - RFP HSR 11-16

6/12/2012 3:16:36 PM CAHSRP-R1.TBL CHSR_half_black-pdf995.pc3 C:\Documents and Settings\sleong\My Documents\NDMProj\356751 - California High Speed Rail - SR99 Improvements\1S-CV-G1008-GSB-A3.dgn sleong