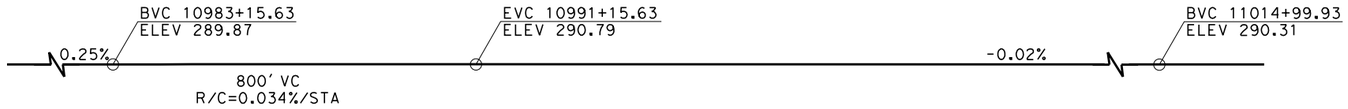

TOP OF RAIL "S" LINE

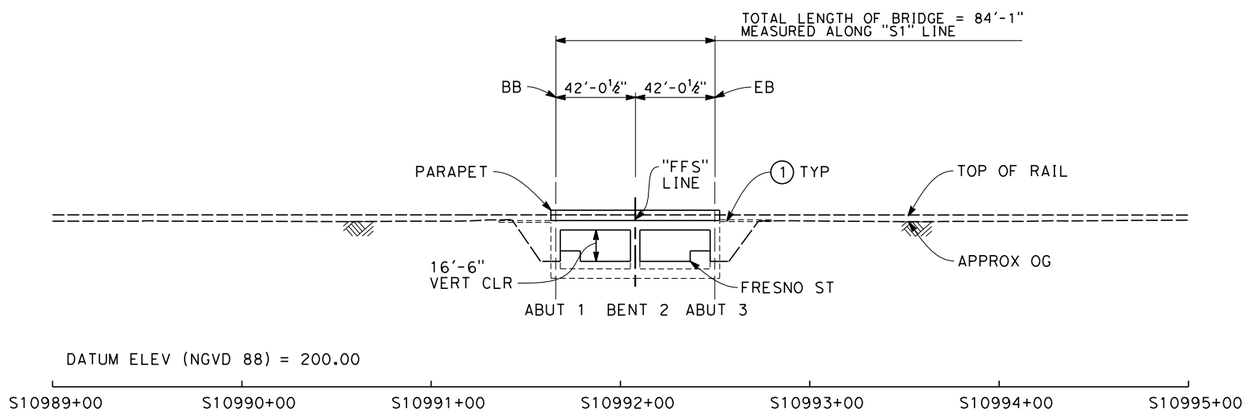

ELEVATION

SCALE 1" = 40'

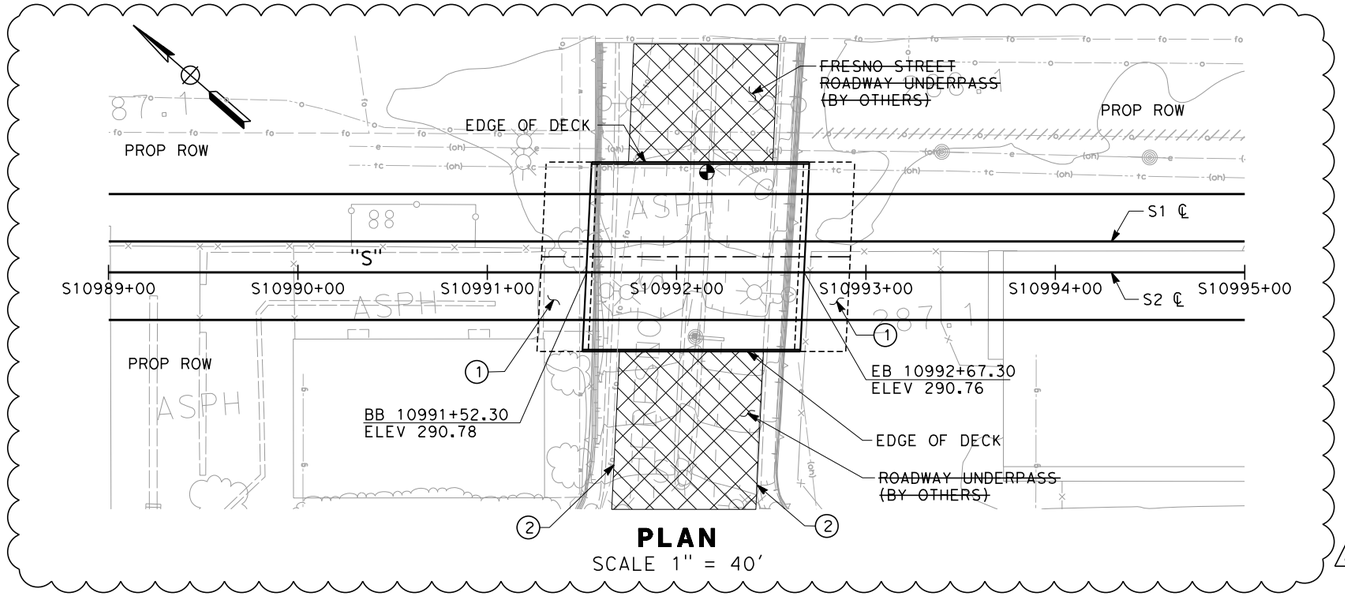

PLAN

SCALE 1" = 40'

NOTES:

1. TRACK FORM SHOWN IS INDICATIVE.
2. DESIGN OF BRIDGE SHALL BE CAPABLE OF ACCOMODATING BOTH SLAB AND BALLASTED TRACK FORMS.

LEGEND:

1. STRUCTURE APPROACH SLAB
2. RETAINING WALL

INDICATE POINT OF MINIMUM VERTICAL CLEARANCE

UNDERPASS ~~(BY OTHERS)~~

A

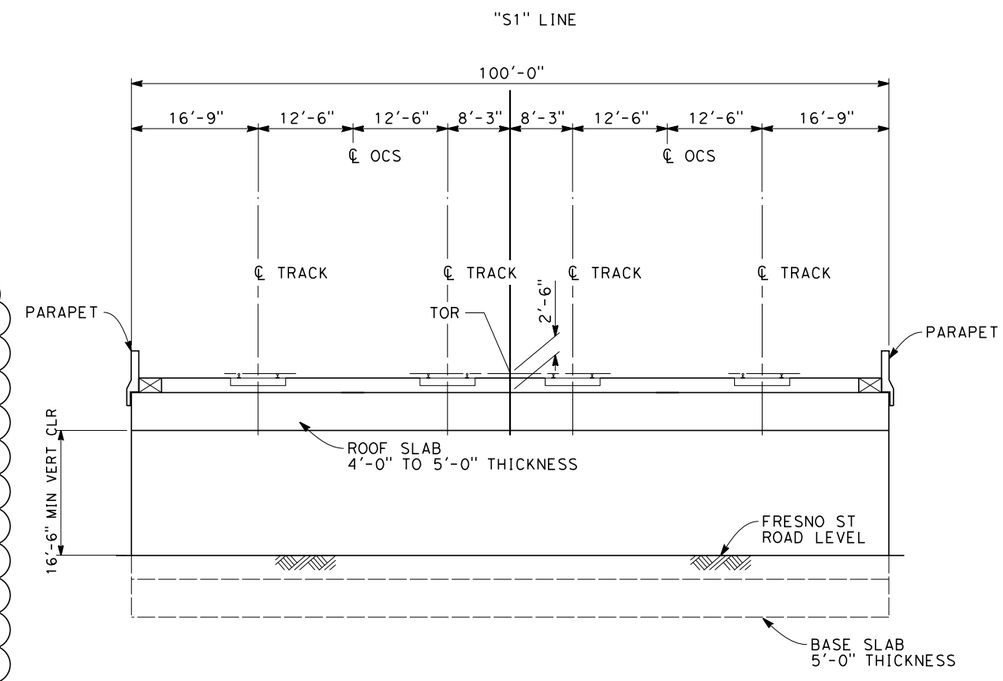

SECTIONAL ELEVATION ON ABUTMENT

SCALE 1" = 10'

A

ADDENDUM 2 - RFP HSR 11-16

05/31/2012 - ADDENDUM 2 - RFP HSR 11-16

REV	DATE	BY	CHK	APP	DESCRIPTION
A	2012-05	AA	SB	RP	FRESNO STREET IN CONTRACT

DESIGNED BY A. ARMSTRONG
DRAWN BY J. VALENZUELA
CHECKED BY Q. LIU
IN CHARGE R. COFFIN
DATE 12/08/11

PROPOSED PRELIMINARY DESIGN

NOT FOR CONSTRUCTION

URS | HMM | ARUP
CALIFORNIA HIGH-SPEED TRAIN

CALIFORNIA HIGH-SPEED RAIL AUTHORITY

CALIFORNIA HIGH-SPEED TRAIN PROJECT
SIERRA SUBDIVISION
PACKAGE 1B
TRACK STRUCTURES
FRESNO STREET OVERPASS
PLAN AND ELEVATION

CONTRACT NO.
DRAWING NO. ST-K1004-A2
SCALE AS SHOWN
SHEET NO.

eron.sudhauser6/30/2012 3:32:32 PM CAHSRP-r1.tbl PDF_half_black_200dpi.pltglobal\americas\Jobs\S-F\131000\131577\4 Internal Project Data\4-03 Drawings\4-03-03 30% Design\4-03-03-05 Design Sheets\Structur