California High-Speed Rail Authority

RFP No.: HSR 13-57

Request for Proposals for Design-Build Services for Construction Package 2-3

Book III, Part A.1
Design Criteria Manual Changes

RFP No.: 13-57 – Addendum No. 5 - 10/09/2014

California High-Speed Train Project

Design Criteria

RFP No.: 13-57 – Addendum No. 5 - 10/09/2014

Revision	Date	Description
0	Mar 2012	Initial Release, R0
1	Nov 2013	Rolling Stock Procurement
2	Feb 2014	Revision 2

Table of Contents

1 GENERAL

1.1 Design Criteria Overview
1.2 Basis of Design
1.3 Regulations, Codes, Standards, and Guidelines
1.4 General Design Parameters
1.5 Durability
1.6 Noise Limitation
1.7 Vibration Limitation
1.8 Sustainability
1.9 Climatic Conditions
1.10 Elevation and Air Pressure
1.11 Air Quality

2 DESIGN SURVEY AND MAPPING

2.1 Scope
2.2 Regulations, Codes, Standards, and Guidelines
2.3 Quality Assurance/Quality Control
2.4 Survey and Mapping
3.2 Right-of-Way Mapping
3.3 Design Survey and Mapping Deliverables

3 TRACKWAY CLEARANCES

3.1 Scope
3.2 Regulations, Codes, Standards, and Guidelines
3.3 Clearances to Overhead and Adjacent Structures and Facilities
3.4 Vehicle Clearance Envelopes
3.5 Track Center Spacing
3.6 Other Clearance Requirements

RFP No.: 13-57 – Addendum No. 5 - 10/09/2014

4 TRACK GEOMETRY
4.1 Scope
4.2 Regulations, Codes, Standards, and Guidelines
4.3 Types of Rail Corridors
4.4 Horizontal Alignment
4.5 Vertical Alignment
4.6 Combined Horizontal and Vertical Curves
4.7 High-Speed Turnouts (60 mph and faster)
4.8 Low and Medium Speed Turnouts (50 mph and slower)
4.9 Non-Standard Turnouts
4.10 High-Speed Crossovers
4.11 Low and Medium Speed Crossovers
4.12 Double Crossovers (Scissors Crossovers)
4.13 Track Layout along Station Platforms
4.14 Access Tracks to Yards and Maintenance Facilities
4.15 Yards Tracks

5 TRACKWORK
5.1 Scope
5.2 Regulations, Codes, Standards, and Guidelines
5.3 Interfaces and General Requirements
5.4 Rail
5.5 Rail Welding and Joints
5.6 Rail Fastenings
5.7 Other Track Material
5.8 Track Support Systems
5.9 Non-Ballasted Track
5.10 Ballasted Track
5.11 Turnouts and Other Special Trackwork Components
5.12 Grade Crossings

6 ROLLING STOCK AND VEHICLE INTRUSION PROTECTION
6.1 Scope
6.2 Regulations, Codes, Standards, and Guidelines
6.3 Protection of HST Operating Infrastructure from Vehicle Intrusion
6.4 Containment of HST Rolling Stock

RFP No.: 13-57 – Addendum No. 5 - 10/09/2014

7 CIVIL

7.1 Scope
7.2 Regulations, Codes, Standards, and Guidelines
7.3 Grading, Side Slopes, and Retaining Walls for Roadways and Sites
7.4 Construction Site Best Management Practices
7.5 Slope/Surface Protection Systems Best Management Practices
7.6 Site Work – Non-Authority Facilities
7.7 Site Work – Authority Facilities
7.8 Access Control Devices
7.9 Wildlife Crossing
7.10 Maintenance and Protection of Traffic during Construction

8 DRAINAGE

8.1 Scope
8.2 Regulations, Codes, Standards, and Guidelines
8.3 Goals and Objectives
8.4 Hydrological Analysis
8.5 Hydraulic Design
8.6 Trackway and Facility Drainage Systems
8.7 Detention/Retention of Surface Water Runoff
8.8 Stormwater Quality Management
8.9 Application of Approved Software

9 UTILITIES

9.1 Scope
9.2 Regulations, Codes, Standards, and Guidelines
9.3 Goals, Objectives, and Agreements
9.4 HST Utilities
9.5 Third Party Utilities

RFP No.: 13-57 – Addendum No. 5 - 10/09/2014

10 GEOTECHNICAL

10.1 Scope
10.2 Regulations, Codes, Standards, and Guidelines
10.3 General Requirements
10.4 Subsurface Investigation and Data Analysis
10.5 Geotechnical Reports
10.6 Bridge, Aerial Structure, and Grade Separation Foundations
10.7 Station and Secondary At-Grade Structures
10.8 Retaining Walls and Trenches
10.9 Embankments and At-Grade Earthen Structures for HST Trackway (Primary Type 1)
10.10 Cut Slopes
10.11 Existing Slopes
10.12 Cut-and-Cover Underground Structures
10.13 Seismic Design
10.14 Track Structure
10.15 Maintenance of Geo-Structures
10.16 References

11 SEISMIC

11.1 Scope
11.2 Regulations, Codes, Standards, and Guidelines
11.3 Seismic Design and Analysis Plan
11.4 Design Classifications
11.5 Seismic Design Approach
11.6 Seismic Design Requirements
11.7 Bridges, Aerial Structures, and Grade Separations
11.8 Passenger Stations and Building Structures

RFP No.: 13-57 – Addendum No. 5 - 10/09/2014

12 STRUCTURES

12.1 Scope
12.2 Regulations, Codes, Standards, and Guidelines
12.3 Types of Structures
12.4 Structural Design Requirements
12.5 Permanent and Transient Loads and Load Combinations for Primary Structures
12.6 Track-Structure Interaction
12.7 Structural Design of Stations, Surface Facilities, Buildings and Ancillary Structures
12.8 Design Considerations for Primary Type 1 Bridges, Aerial Structures, and Grade Separations
12.9 Design Considerations for Primary Type 2 and Secondary Structures
12.10 Design Considerations for Earth Retaining Structures
12.11 Cut-and-Cover Structures
12.12 Support and Underpinning of Structures
12.13 Areas of Potential Explosion
12.14 Structure Interface Issues

13 TUNNELS

13.1 Scope
13.2 Regulations, Codes, Standards, and Guidelines
13.3 Basic High-Speed Train Tunnel Configuration and Geometry
13.4 Tunnel Portals
13.5 Tunnel Ventilation Requirements and Configurations
13.6 Materials
13.7 Fire Protection
13.8 Design Loads
13.9 Structural Analysis
13.10 Ground Movement
13.11 Measurement and Monitoring
13.12 Waterproofing
13.13 Drainage
13.14 Special Ground Conditions
13.15 System-wide Interfaces
13.16 Tunnel Portal Facilities
13.17 Portal Infrastructure Requirements for Different Categories of Tunnel

RFP No.: 13-57 – Addendum No. 5 - 10/09/2014

14 STATIONS
14.1 Scope
14.2 Regulations, Codes, Standards, and Guidelines
14.3 Stations
14.4 Station Site Design
14.5 Landscaping

15 SUPPORT FACILITIES
15.1 Scope
15.2 Regulations, Codes, Standards, and Guidelines
15.3 Support Facilities
15.4 Support Facilities Site Design

16 MECHANICAL (TBD)

17 FACILITY POWER AND LIGHTING SYSTEMS
17.1 Scope
17.2 Regulations, Codes, Standards, and Guidelines
17.3 Description of the Facility Power System
17.4 Classifications of Electrical Loads
17.5 General Requirements
17.6 Supply Voltage
17.7 New Electrical Utility Services
17.8 Emergency Power Supply Systems
17.9 Sustainable Power Sources
17.10 Facility Power System Equipment
17.11 Specialized Electrical Equipment and/or Loads
17.12 Lighting System Requirements
17.13 Specialized Lighting
17.14 Raceway Systems
17.15 Wiring/Cabling Systems
17.16 Identification Requirements (Equipment, Conductors, Conduit, Tray)
17.17 Electrical Discrete and Serial I/O Point Requirements
17.18 Temporary Power and Lighting
17.19 Grounding, Bonding and Lightning Protection
17.20 Fire Detection System
17.21 Vehicular Traffic Management System

RFP No.: 13-57 – Addendum No. 5 - 10/09/2014

17.22 Facility Communication Systems
17.23 Testing
17.24 Spares

18 FIRE PROTECTION (TBD)

19 BUILDING AUTOMATION AND MANAGEMENT SYSTEMS (TBD)

20 TRACTION POWER SUPPLY SYSTEM
20.1 Scope
20.2 Regulations, Codes, Standards, and Guidelines
20.3 Overview and General Design Criteria
20.4 Key Design Criteria
20.5 Related Documentation
20.6 System Voltage and Frequency
20.7 System Configuration
20.8 Traction Electrification System Interfaces
20.9 Traction Power Facilities and Associated Sites
20.10 Electrical Materials
20.11 Emergency Power
20.12 Wayside Equipment
20.13 Calculations
20.14 New Power Utility Services
20.15 Spares

21 OVERHEAD CONTACT SYSTEM AND TRACTION POWER RETURN SYSTEM
21.1 Scope
21.2 Regulations, Codes, Standards, and Guidelines
21.3 Definitions
21.4 Overhead Contact System Description and General Performance Requirements
21.5 Environmental Conditions and Climatic Loading Requirements
21.6 Overhead Contact Line Design
21.7 Conductor Tensions
21.8 Catenary Conductors
21.9 Other Overhead Conductors and Cables
21.10 Dynamic Behavior and Quality of Current Collection

RFP No.: 13-57 – Addendum No. 5 - 10/09/2014

21.11 Current Capacity of Overhead Contact System
21.12 Sectionalizing and Switching, and Pole-Mounted Equipment
21.13 Insulation Coordination Requirements for OCS Installations
21.14 OCS Clearances and Protection against Electric Shock
21.15 OCS Structural Requirements
21.16 Traction Power Return System
21.17 OCS Interfaces with Other Disciplines

22 GROUNDING AND BONDING REQUIREMENTS
22.1 Scope
22.2 Regulations, Codes and Standards
22.3 General Grounding and Bonding Requirements
22.4 Maximum Permissible Step and Touch Potential
22.5 Grounding and Bonding Requirements for Facilities/Buildings and Structures
22.6 Grounding and Bonding Systems for the Traction Electrification System Equipment and Structures
22.7 Grounding and Bonding Protection Systems for the Automatic Train Control System Equipment and Structures
22.8 Grounding and Bonding Protection Systems for the Communications System Equipment and Structures
22.9 Grounding and Bonding Requirements for Facility Power Systems and Lighting Systems
22.10 Grounding Requirements for Raceway, Cable Tray, Underground Ductbanks, and Structures
22.11 Cables
22.12 Grounding and Bonding Requirements for Utilities
22.13 Lightning Protection

23 CORROSION CONTROL
23.1 Scope
23.2 Regulations, Codes, Standards, and Guidelines
23.3 Soil and Water Corrosion Control
23.4 Atmospheric Corrosion Control
23.5 Graffiti-Resistant Coatings
23.6 Stray Current Sources and Protection

RFP No.: 13-57 – Addendum No. 5 - 10/09/2014

24 AUTOMATIC TRAIN CONTROL

24.1 Scope
24.2 Regulations, Codes, Standards, and Guidelines
24.3 General Design Requirements
24.4 Related Documentation
24.5 Automatic Train Control Functional Requirements
24.6 Grounding, Bonding, and Lightning Protection System
24.7 Onboard Equipment
24.8 Wayside Equipment
24.9 System Time
24.10 Maintenance and Diagnostic Functions
24.11 Automatic Train Supervision Subsystem

25 YARD SIGNALING

25.1 Scope
25.2 Regulations, Codes, Standards, and Guidelines
25.3 General Design Requirements
25.4 Design Life
25.5 Environmental
25.6 Onboard Equipment
25.7 Wayside Equipment
25.8 System Configuration
25.9 Functional Requirements
25.10 Yard Signal Control System
25.11 Yard Signal Control System Hardware Requirements
25.12 Electromagnetic Compatibility
25.13 Reliability, Availability, and Maintainability Requirements
25.14 Software Requirements
25.15 Yard Safety Critical System Requirements
25.16 Maintenance and Diagnostic Functions
25.17 Yard Signal Control System Interfaces with Other Systems
25.18 Transition Tracks between Main Tracks and Yard Tracks
25.19 Maintenance of Infrastructure Yards

RFP No.: 13-57 – Addendum No. 5 - 10/09/2014

26 ELECTROMAGNETIC COMPATIBILITY AND INTERFERENCE

26.1 Scope
26.2 Regulations, Codes, Standards, and Guidelines
26.3 Description of Electromagnetic Compatibility Program and Electromagnetic Interference
26.4 General Design Requirements
26.5 Overview of EMC Design Criteria Categories
26.6 Communications EMC Design Criteria
26.7 Automatic Train Control EMC Design Criteria
26.8 Traction Electrification System EMC Design Criteria
26.9 Rolling Stock EMC Design Criteria
26.10 Station and Facility Equipment EMC Design Criteria

27 SUPERVISORY CONTROL AND DATA ACQUISITIONS SUBSYSTEMS

27.1 Scope
27.2 Regulations, Codes, Standards, and Guidelines
27.3 Related Documentation
27.4 Overview of the SCADA Subsystems and Related Communications Systems
27.5 SCADA Subsystems

28 COMMUNICATIONS

28.1 Scope
28.2 Regulations, Codes, Standards, and Guidelines
28.3 Related Documentation
28.4 Communications Systems
28.5 Communications Physical Support Rooms, Enclosures, Shelters and Equipment
28.6 External Services

29 ROLLING STOCK – CORE SYSTEMS INTERFACES

29.1 Scope
29.2 Regulations, Codes, Standards, and Guidelines
29.3 General Interface Design Requirements
29.4 Traction Power Interfaces
29.5 Overhead Contact System Interfaces
29.6 Automatic Train Control Interfaces
29.7 Communications Interfaces

RFP No.: 13-57 – Addendum No. 5 - 10/09/2014

30 RELIABILITY, AVAILABILITY, MAINTAINABILITY, AND SAFETY
30.1 Scope
30.2 Regulations, Codes, Standards, and Guidelines
30.3 CHSTS RAM Program
30.4 RAM Design Requirements

31 SYSTEMS ASSURANCE (TBD)

32 SYSTEM SAFETY AND SECURITY
32.1 Safety and Security Policy Statement
32.2 Scope
32.3 Regulations, Codes, and Standards
32.4 Goals
32.5 Hazard and Security Risk Management
32.6 Construction Safety and Security
32.7 Designing for Safety and Security
32.8 Safety and Security Design Criteria
32.9 Stations
32.10 Parking Garages and Lots
32.11 Radio and SCADA Communications
32.12 Support Facilities
32.13 Traction Electrification
32.14 Train Control
32.15 Operations Control Center (OCC)
32.16 Maintenance and Storage Facility
32.17 Rolling Stock
32.18 Alignment Configurations

RFP No.: 13-57 – Addendum No. 5 - 10/09/2014

Chapter 4

Track Geometry

Revision	Date	Description
0	02 Mar 12	Initial Release, R0
1	June 2013	Revision 1
2	Feb 2014	Revision 2

RFP No.: 13-57 – Addendum No. 5 - 10/09/2014

Table of Contents

4 TRACK GEOMETRY 4-1
4.1 Scope 4-1
4.2 Regulations, Codes, Standards, and Guidelines 4-1
4.3 Types of Rail Corridors 4-1
4.3.1 Dedicated High-Speed Rail Corridors 4-1
4.3.2 Shared Corridors 4-1
4.4 Horizontal Alignment 4-2
4.4.1 Selection of Design Speed 4-2
4.4.2 Minimum Lengths of Alignment Segments 4-2
4.4.3 Minimum Radii 4-3
4.4.4 Curves with Small Central Angles 4-4
4.4.5 Superelevation 4-4
4.4.6 Spiral Curves 4-6
4.5 Vertical Alignment 4-10
4.5.1 Grades 4-10
4.5.2 Vertical Curves 4-11
4.6 Combined Horizontal and Vertical Curves 4-11
4.7 High-Speed Turnouts (60 mph and faster) 4-12
4.8 Low and Medium Speed Turnouts (55 mph and slower) 4-13
4.9 Non-Standard Turnouts 4-15
4.10 High-Speed Crossovers 4-15
4.11 Low and Medium Speed Crossovers 4-16
4.12 Double Crossovers (Scissors Crossovers) 4-18
4.13 Track Layout along Station Platforms 4-18
4.14 Access Tracks to Yards and Maintenance Facilities 4-20
4.15 Yards Tracks 4-21
4.15.1 Connecting and Switching Tracks Inside Yards 4-21
4.15.2 Servicing and Storage Tracks 4-22
4.15.3 Simple Track Ladders 4-23
4.15.4 Double Angle Track Ladders 4-24

Tables

Table 4-1: Minimum Segment Lengths at Various Speeds 4-3
Table 4-2: Recommended and Minimum Curve Radii 4-4
Table 4-3: Recommended and Minimum Length of Spiral (Ls) 4-9
Table 4-4: Recommended and Maximum Grades 4-11
Table 4-5: High-Speed Turnouts 4-13
Table 4-6: Low and Medium Speed Turnouts 4-14
Table 4-7: High-Speed Crossovers – 16.50 feet Track Centers 4-16
Table 4-8: Low and Medium Speed Crossovers 4-17

RFP No.: 13-57 – Addendum No. 5 - 10/09/2014

Table 4-9: Geometry of Station Entry/Exit High-Speed Turnouts and Return Curves..... 4-19

Figures

Figure 4-1: Spiral Curves Definition 4-7
Figure 4-2: High-Speed Turnouts..... 4-12
Figure 4-3: Low and Medium Speed Turnouts 4-14
Figure 4-4: High-Speed Crossovers..... 4-16
Figure 4-5: Low and Medium Speed Crossovers 4-17
Figure 4-6: Detail of Station Entry/Exit High-Speed Turnout and Return Curve..... 4-19
Figure 4-7: Simple Ladder (4 Tracks Illustrated) 4-23
Figure 4-8: Double Ladder (4 Diverging Tracks Illustrated) 4-25
Figure 4-9: Double Ladder, Track Space Requirements (6 Diverging Tracks Illustrated) ... 4-25

RFP No.: 13-57 – Addendum No. 5 - 10/09/2014

Acronyms

E / e	Equilibrium Superelevation
Ea	Actual Superelevation
Eu	Unbalanced Superelevation
HST	High-Speed Train
OCS	Overhead Contact System

RFP No.: 13-57 – Addendum No. 5 - 10/09/2014

4 Track Geometry

4.1 Scope

This chapter provides design criteria of geometric design requirements for mainline tracks, station tracks, yard tracks, turnouts, and crossovers on dedicated high-speed rail corridors of standard gauge (4′-8 ½″).

4.2 Regulations, Codes, Standards, and Guidelines

Refer to the *General* chapter for requirements pertaining to regulations, codes, and standards. Applicable codes and regulations include but are not limited to the following:

- Code of Federal Regulations (CFR) Title 49, Part 213, Track Safety Standards
- California Public Utilities Commission (CPUC) General Orders (GOs) 26D and 118
- American Railway Engineering and Maintenance-of-Way Association (AREMA) Manual for Railway Engineering

4.3 Types of Rail Corridors

4.3.1 Dedicated High-Speed Rail Corridors

Dedicated High-Speed Rail Corridors are segments of right of way within the High-Speed Train (HST) System where tracks are used exclusively for HST operations, designated as such in the operating rules and where the main tracks are physically separated from other railroad tracks. There is no operation of freight trains or other passenger trains within these corridors. The operation of trains and equipment used for Maintenance of Infrastructure work is permitted in these corridors.

4.3.2 Shared Corridors

Shared Corridors are segments along the HST System where the HST right of way is shared with other transportation system(s) including highway, freight or passenger rail.

Where HST tracks are shared with other passenger trains, design criteria for the maximum practicable design speed shall be used. At locations where tracks are shared with freight trains, the alignment standards for freight operations shall be checked and the more stringent criteria shall be applied.

RFP No.: 13-57 – Addendum No. 5 - 10/09/2014

4.4 Horizontal Alignment

Alignments for HST operation shall be designed to minimize the use of curves and to permit the maximum practical design speed.

When curves are used, the largest practical radii shall be used. Where the maximum design speed cannot be achieved, the highest achievable speed shall be used to define the geometry of the alignment.

The horizontal alignment shall be developed along track centerlines. It shall consist of tangents and circular curves connected by transition spirals of appropriate lengths.

When possible, double track alignment shall be designed with a constant distance in between track centerlines. Segments along straight line tracks shall be parallel and circular curves on adjacent, parallel tracks shall be concentric.

4.4.1 Selection of Design Speed

The speed to be used for the design of the alignment shall be the system design speed, not the operating speed, planned to be used at the time of start of operations. The purpose of determining design speed is to find the appropriate superelevation and spiral length for a particular curve in the alignment. The highest anticipated speed, superelevation, and unbalanced superelevation shall be used.

The maximum design speed for a curve shall be the same throughout the entire length of the curve from tangent points. Separate design speeds shall not be used for separate portions of a curve. If a speed limitation exists for any segment of the curve, then the design speed for the entire curve shall be the lower speed.

Refer to the *General* chapter for maximum allowed design and operating speeds.

4.4.2 Minimum Lengths of Alignment Segments

The minimum allowed segment length (L), in feet, shall be calculated by the following formula:

$$L = V \times 44/30 \times t$$

Where:

V = design speed (miles per hour)

t = attenuation time (seconds)

t ≥ 2.4 seconds (Recommended)

1.8 seconds (Minimum)

1.0 seconds (on diverging route of turnouts)

RFP No.: 13-57 – Addendum No. 5 - 10/09/2014

Minimum segment lengths shall apply to horizontal and vertical alignment segments. Where alignment segments overlap, each change shall be treated as a separate alignment element for the purpose of calculating minimum segment lengths. See Section 4.6, Combined Horizontal and Vertical Curves for further information. The segment length requirement will govern only where other design considerations for the individual alignment elements do not require longer segment lengths.

Minimum segment lengths for various design speeds are presented in Table 4-1. Additional values, for design speeds not shown, can be obtained from the formula provided in this section, rounded up to the nearest integer.

Table 4-1: Minimum Segment Lengths at Various Speeds

Design Speed (miles per hour)	Minimum Segment Lengths (in feet) for times of		
	2.4 seconds	1.8 seconds	1.0 seconds
250	880	660	367
220	774	581	323
200	704	528	293
175	616	462	257
150	528	396	220
125	440	330	183
110	387	290	161
90	317	238	132

4.4.3 Minimum Radii

The minimum allowed curve radius shall be derived from the following formula:

$$R = 4V^2_{max} / (Ea + Eu)$$

Where:

R = Radius (feet)

V_{max} = Maximum design speed (miles per hour)

Ea = Actual superelevation (inches) Ea_{max}= 6 inches

Eu = Unbalanced superelevation (inches) Eu_{max}= 3 inches

Table 4-2 presents minimum values of curve radii for various design speeds. When possible, recommended values shall be used. Additional curve radii for design speeds not shown on Table 4-2 can be calculated with the formula provided above, using Ea= 6 inches for Minimum

RFP No.: 13-57 – Addendum No. 5 - 10/09/2014

values and Ea= 3 inches as Recommended values. The minimum curve radius for tracks located outside the perimeter of the yards shall not be less than the value specified in Section 4.14.

Table 4-2: Recommended and Minimum Curve Radii

Design Speed (miles per hour)	Minimum Radius based on Superelevation Limits	
	Recommended (feet)	Minimum (feet)
250	45,000	28,000
220	35,000	22,000
200	30,000	18,000
175	22,000	14,000
150	16,000	10,000
125	10,500	7,000
110	8,100	5,400
90	5,500	3,600

4.4.4 Curves with Small Central Angles

For small central angles the radius shall be sufficiently large to provide the time-based minimum arc and spiral segment lengths. There is no limitation on maximum acceptable curve radius. In general, larger radii are preferable to smaller radii as the superelevation and unbalance values become smaller as radius increases. It is desirable that the radius selected results in the length of the simple curve portion being about equal to or longer than the length of spiral. Since each portion is an alignment segment, if each segment is equal in length, the entire curve with spirals should have a minimum length not less than three times the Minimum Segment Length for the design speed of the curve. Double (back-to-back) spirals or curves with long spirals and short arc lengths shall not be used.

4.4.5 Superelevation

Superelevation is the maximum difference in height between outer and inner rails on curved track, measured at the center of the rail head surface. Superelevation is used to counteract, or partially counteract, the centrifugal force acting radially outward on a train when it is traveling along the curve. A state of equilibrium is reached when the centrifugal force acting on a train is equal to the counteracting force pulling on a train by gravity along the superelevated plane of the track.

4.4.5.1 Equilibrium (Balanced) Superelevation

Equilibrium superelevation (E) may be derived by the simplified formula:

$$E = 4.0\ V^2 / R$$

RFP No.: 13-57 – Addendum No. 5 - 10/09/2014

Where:

E = Equilibrium superelevation (inches)

V = Design speed (miles per hour)

R = Radius of curve (feet)

E is also expressed as:

$$E = Ea+Eu$$

Where:

Ea = actual superelevation (inches)

Eu = unbalanced superelevation (inches)

Thus: $E = (Ea+Eu) = 4.0\ V^2 / R$

4.4.5.2 Actual Superelevation

Actual superelevation (Ea) shall be accomplished by maintaining the top of the inside (or low) rail at the "top of rail profile" while raising the outside (or high) rail by the amount of the Ea. The inside rail is designated as the "grade rail" and the outside rail is designated as the "line rail".

The Ea shall be determined to the nearest 1/4 inch by the formulas above. For any curve calculation on the main track which yields less than 1/4 inch of required superelevation, 1/4 inch shall be specified.

Curves within special trackwork shall not be superelevated. Yard tracks and other low speed tracks on which trains or equipment will normally be stationary for long periods shall not be superelevated. Yard lead tracks and other running tracks shall be superelevated as described in the discussion of those type tracks.

It is recommended that the Ea be limited to 6 inches.

4.4.5.3 Unbalanced Superelevation

Unbalanced superelevation (Eu), also referred to as cant deficiency, is the amount of superelevation not applied to the curve. Eu can also be defined as the difference between the equilibrium superelevation (E) and the Ea.

$$Eu=E-Ea$$

Where:

Ea = actual superelevation that is applied to the curve

RFP No.: 13-57 – Addendum No. 5 - 10/09/2014

Eu = unbalanced superelevation

The maximum Eu shall be limited to 3 inches.

4.4.5.4 Ride Quality and Superelevation

Ride quality on curves is determined by the amount of lateral acceleration which in curve design is expressed as Eu. Curves shall not be superelevated to balance the design speed, the calculated average speed, or the maximum operating speed. Eu values shall be kept between 1 and 3 inches for ride comfort and smooth running of the vehicles through curves.

- Minimum Eu shall be 1.0 inch, except where Ea+Eu is less than 2.0 inches, in which case Ea and Eu shall be set to be approximately equal.
- Maximum Eu shall be 3.0 inches, based on a lateral acceleration limit of 0.05g.

4.4.6 Spiral Curves

Spiral curves shall be used to transition from tangent tracks to tracks on circular curves and to gradually develop full track superelevation. Figure 4-1 illustrates the geometry of spiral transition curves.

Spiral transition curves used in high-speed track alignment shall be of the following types:

- Half-Sine spiral curves (variable rate transitions)
- Clothoid spiral curves (constant rate transitions)

RFP No.: 13-57 – Addendum No. 5 - 10/09/2014

Figure 4-1: Spiral Curves Definition

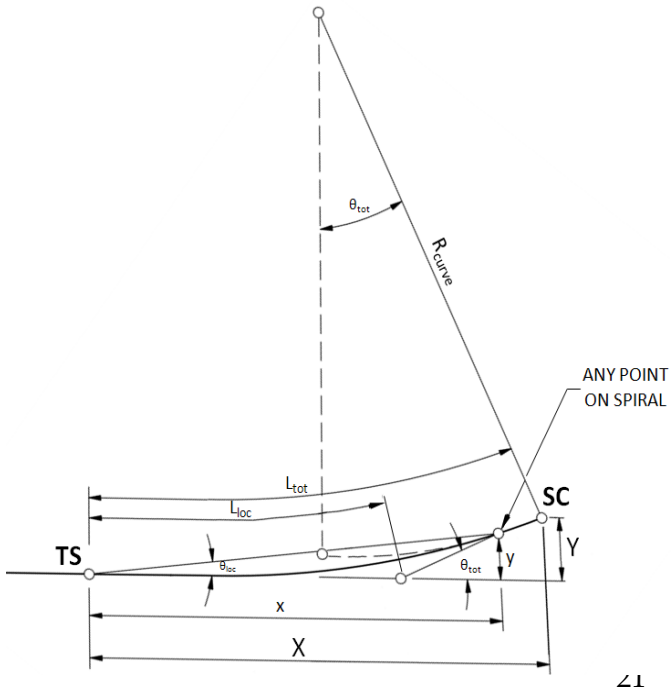

Where:

TS	Tangent Spiral point: the point of change from tangent to spiral
SC	Spiral Curve point: the point of change from spiral to circular curve
R_{curve}	Radius of circular curve, in feet
L_{loc}	Spiral length from TS to a specific location.
L_{tot}	Total length of spiral from TS to SC (or SCS) in feet
x =	Distance from TC point to any point on the curve, measured along the extended initial tangent
X=	Total x at the end of the transition curve from TS to SC
y=	Tangent offset distance to any point along the spiral, measured perpendicular to the extended initial tangent.
Y =	Tangent offset of the SC point.
θ_{loc} =	Spiral angle at any point along the spiral
θ_{tot} =	Total spiral angle

4.4.6.1 Half-Sine Spirals

Half-Sine spirals (also known as Sine Half-Wavelength Diminishing Tangent Curves and Cosine Spirals) provide a variable rate of change in curvature between the tangent and circular curved track. Half-Sine spirals shall be used on:

- All curves along HST mainline tracks
- Curves having design speeds of 110 mph or more
- Curves associated with turnouts having design maximum speed of 110 mph or more

Half-Sine spirals are defined by the following formulas (angles in these formulae are in radians):

$$y=\frac{X^2}{R_{curve}}\left[\frac{\alpha^2}{4} - \frac{1}{2\pi^2}\left\{1-\cos\alpha\pi\right\}\right] \quad \alpha=\frac{x}{X}$$

$$R_{loc}=\frac{2R_{curve}}{\left[1-\cos\left(\pi\frac{L_{loc}}{L_{tot}}\right)\right]}$$

$$Ea_{loc}=0.5Ea_{curve}\left[1-\cos\left(\pi\frac{L_{loc}}{L_{tot}}\right)\right]$$

RFP No.: 13-57 – Addendum No. 5 - 10/09/2014

Where:

Ea_{loc}= Variable actual superelevation at a specific location along the spiral, in inches (Ea_{loc}=Ea_{curve} at the SC location)

Ea_{curve}= Actual superelevation at the SC and throughout the circular curve, in inches

4.4.6.2 Clothoid Spirals

Clothoid spirals provide a constant rate of change in curvature between the tangent and the connecting circular curve. Clothoid spirals shall be used on tracks having design speed lower than 110 mph. Clothoid spirals may be used on large radius curves that require small amounts or no superelevation and small unbalanced superelevation.

Clothoid spiral are defined by the following formulas:

$$\theta_{loc} = \frac{L_{loc}^2}{2R_{curve}L_{tot}}$$

$$R_{loc} = \frac{R_{curve}}{\left(\frac{L_{loc}}{L_{tot}}\right)}$$

$$Ea_{loc} = Ea_{curve}\left(\frac{L_{loc}}{L_{tot}}\right)$$

4.4.6.3 Spiral Lengths

The length of the spirals shall be the longest length determined by calculating the length requirements per Table 4-3. These lengths are the following:

- Length determined by allowed rate of change in superelevation, which controls the speed of car rotation around the track centerline (roll).
- Length determined by allowed rate of change in Eu, which controls the acceleration caused by centrifugal force not balanced by the Ea (lateral jerk).
- Length determined by limitation on twisting over the vehicle body.
- Length needed to achieve Attenuation Time

RFP No.: 13-57 – Addendum No. 5 - 10/09/2014

Table 4-3: Recommended and Minimum Length of Spiral (Ls)

Half-Sine (Variable Change) Spirals [1]		
Spiral Design Factor	**Recommended**	**Minimum**
Superelevation	1.63 Ea V	1.30 Ea V
Unbalance	2.10 Eu V	1.57 Eu V
Twist [2]	140 Ea	118 Ea
Minimum Segment	2.64 V	2.20 V
Clothoid (Linear Change) Spirals		
Superelevation	1.47 Ea V	1.17 Ea V
Unbalance	1.63 Eu V	1.22 Eu V
Twist	90 Ea	75 Ea
Minimum Segment	2.64 V	2.20 V

Notes:
(1) Longer lengths of half-sine spirals are due to the variability in the ramp rate.
(2) Provides maximum twist rates identical to the twist rate of the clothoids.

Where:
Ls= Spiral length (feet)
Ea = Actual elevation (inches)
Eu = Unbalanced elevation (inches)
V = maximum speed of the train (mph)

After calculation and selection of length, based on the governing requirement, the spiral length should then be rounded up to a convenient value for further calculation and use in the alignment.

4.4.6.4 Special Situations

Spirals on Large Radius Curves – Clothoid spirals may be used instead of half-sine spirals regardless of track type or design speed if the following conditions are met: The required superelevation and unbalanced superelevation are both under 1.0 inch at the maximum design speed; and the "Minimum Segment" length for the spiral is more than twice the length required by any other factor.

Spirals may be omitted if the following conditions are met:

- The required superelevation is zero (balancing superelevation for the maximum speed less than 0.5 inches); and
- The calculated offset of the curve due to application of the spiral is less than 0.05 feet in ballasted track or less than 0.02 feet in non-ballasted track.

Reverse Curves – Reverse curves shall only be allowed when there is insufficient distance between spiral curves to provide the minimum required length of tangent segment. In these cases, the spirals shall be extended to provide a reversing curve.

RFP No.: 13-57 – Addendum No. 5 - 10/09/2014

Compound Curves – Compound curves shall not be used on mainline tracks.

4.5 Vertical Alignment

The vertical alignment is defined as the top of rail profile grade. In curves with superelevation, the vertical alignment is the top of the low rail.

Vertical alignment shall be designed to have the smoothest practical profile while optimizing earthwork, structures, tunnels, and drainage. Use of multiple short grades and multiple changes in grade within any particular change of elevation ("sawtooth profiles") shall be avoided to the extent practical. In addition to increasing operational costs and difficulty by requiring frequent changes in power, a line with multiple changes in grade is aesthetically unappealing. As a check on the reasonableness of the profile developed, it shall be drawn up at a highly condensed horizontal scale so that the vertical changes are exaggerated, otherwise, the alignment can appear deceptively smooth. Changes in top of rail profile gradients shall be connected by vertical curves.

4.5.1 Grades

Grades are expressed in absolute values. Grades shall be as low as practical. In areas of relatively flat terrain, the grades should not exceed the recommended values per Table 4-4. In mountainous terrain, grades should be minimized in order to maximize operating efficiency which most often means lower gradients than the surrounding terrain.

The average grade over any 6.0 miles of line should not exceed 2.5 percent.

Maximum gradient shall not exceed 2.5 percent on ballasted track and 3.5 percent on non-ballasted track. When these limit values are used, the low end of the grade shall not be less than 2.0 miles beyond the end of a passenger station platform.

Maximum gradient through passenger station platform shall be 0.25 percent.

Minimum gradient through cuts, tunnels, and trenches shall be 0.25 percent.

Maximum segment length of continuous 3.5% grade shall not exceed 20,000 feet.

In areas occupied by turnouts and other special trackwork, grades up to 1.75 percent in ballasted track and 3.50 percent in non-ballasted track may be used where the use of lower grades would result in the requirement for lower speed turnouts.

For grade limitation at phase breaks, refer to the *Traction Power Supply System* chapter.

RFP No.: 13-57 – Addendum No. 5 - 10/09/2014

Table 4-4: Recommended and Maximum Grades

Track type and conditions	Recommended	Maximum
Ballasted	1.25%	2.50%
Non-ballasted	1.25%	3.50%
Ballasted track through turnouts and other special trackwork	0.50%	1.75%
Non-ballasted track through turnouts and other special trackwork	1.25%	3.50%
Mainline tracks through Station Platforms	0%	0.25%

4.5.2 Vertical Curves

Vertical Curves shall be Parabolic. The length of vertical curves shall be rounded up to nearest 100-foot increment where practical.

4.5.2.1 Vertical Curve Acceleration Rates

The acceleration value to be used for vertical curves shall not exceed 0.90 ft/sec^2.

4.5.2.2 Minimum Vertical Curve Lengths (L_{VC})

The minimum vertical curve lengths (L_{VC}), in feet, on lines carrying HSTs only shall be the longer of the following:

$$L_{VC} = 3.5\ V \text{ or } L_{VC} = 2.15\ V^2\ (\Delta\%/100\ )\ /\ 0.90\ \text{ft/sec}^2, \text{ but not less than } 200\ \Delta\ \%$$

Where:

V = Design speed (miles per hour)

Δ% = algebraic difference of the gradients (in %)

4.5.2.3 Vertical Curves in Shared Corridors

Where HST tracks closely parallel lines for other passenger or freight trains such that a common profile is desirable, the longest vertical curve length determined by separate calculation for each type of traffic shall determine the vertical curve length to be used for all tracks. The length of vertical curve for the other systems shall be based on the standards of the systems involved.

4.6 Combined Horizontal and Vertical Curves

Horizontal and vertical curves may overlap. It is preferred to avoid overlap of vertical curves and spiral curves. Overlaps may be used if this consideration causes an increase in cost, increases the height of fill or aerial structures, or results in other aspects of the alignment being reduced below recommended values. For example, when there is a vertical curve within the body of a horizontal curve, the parts of the horizontal curve outside of the vertical curve will be treated as separate segments when calculating segment lengths. Horizontal and vertical

RFP No.: 13-57 – Addendum No. 5 - 10/09/2014

segment ends may coincide if it is not practical to separate them by the minimum segment length distance.

4.7 High-Speed Turnouts (60 mph and faster)

Turnout geometries are presented for the following speeds: 60 mph, 80, mph, 110 mph, and 150 mph. The requirements of this section are limited to geometric considerations only. Track components for turnouts and other special trackwork can be found in the *Trackwork c*hapter. Other spatial considerations, including distance between track centers and space beside and around turnouts can be found in the *Trackway Clearances* chapter.

High-speed turnout and crossover designs are based on the following criteria:

- Eu not to exceed 3 inches
- Minimum time over any turnout segment or curve connected to a turnout, including spirals on the frog end of turnouts and spirals into a curve on the diverging track that is adjacent to the turnout, about 1.0 second
- Maximum Virtual Transition Rate at switch point: 4.5 inches/second
- Ratio of entry radius to turnout body radius: Not less than 2:1.
- Curved frogs
- Spirals shall be kept out of frogs

Figure 4-2: High-Speed Turnouts

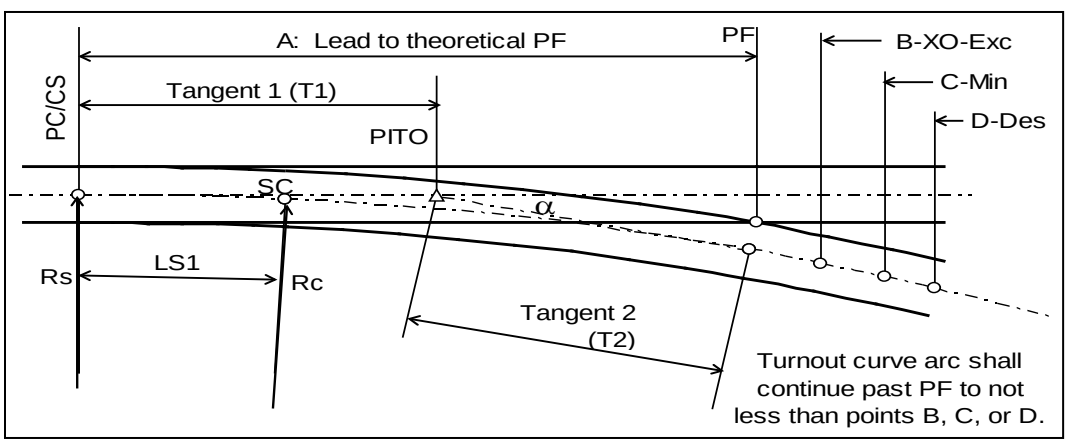

RFP No.: 13-57 – Addendum No. 5 - 10/09/2014

Table 4-5: High-Speed Turnouts

Geometry of Turnout and its Segments, in feet unless stated otherwise				
Design Speed	60 mph	80 mph	110 mph	150 mph
Turnout Entry Radius	10,000.00	18,000.00	34,000.00	80,000.00
Turnout Body Radius	5,000.00	9,000.00	17,000.00	32,000.00
Switch Spiral Length and Desirable Frog End Spiral Length	90.00	120.00	160.00	220.00
A. Distance to Theoretical Point of Frog (Zero Point, also called Fine Point)	237.53	318.53	436.76	610.07
Angle at Theoretical Point of Frog	2d27m49s	1d 50m12s	1d20m14s	0d58m27s
Derived Frog Number (AREMA method)	23.25	31.2	42.8	58.8
Tangent 1 (T1)	128.06	171.67	333.14	461.99
Tangent 2 (T2)	109.48	146.87	276.93	363.30
Turnout Body Curve Arc Length, SC to PF	147.50	198.51	276.74	375.18
B. Distance to point of 5.85 ft. separation	262.62	352.18	482.98	673.52
C. Distance to point of 7.00 ft. separation	285.48	382.85	525.11	731.34
D. Distance to point of 8.00 ft. separation	303.85	407.49	558.97	777.81

Notes:
Values in table are for illustration purposes, and so are generally given to 2 decimal places. This is not to be construed as the necessary limit for the alignment calculations.

To provide for future OCS design and construction, sufficient distance is required between:

1. two adjacent points of switches of adjacent universal crossovers
2. point of switch of turnout and adjacent point of switch of crossover

The preferred distance between adjacent switch points along the main tracks is 1,400 feet. The minimum distance between adjacent switch points along the main track is 1,000 feet. Placement of high-speed turnouts in relation to alignment features shall be based on 1.0 seconds of run time of the slower alignment element, whether another turnout or the end of a spiral or vertical curve.

4.8 Low and Medium Speed Turnouts (55 mph and slower)

Turnouts to storage and refuge tracks, yard connection tracks, and within yards and any other low and medium speed locations shall use AREMA standard frogs. The standard turnout sizes to be used shall be Numbers: 9, 11, 15, and 20.

Number 11 turnouts shall be used as the standard yard turnout, and as the minimum size turnout to be installed in main tracks with speeds of 125 mph or less and in station tracks. Main line turnouts to yard Leads or other tracks shall be no less than Number 20 turnouts if the conditions allow it. Turnouts from station tracks to stub end storage tracks shall be Number 11.

RFP No.: 13-57 – Addendum No. 5 - 10/09/2014

Number 9 turnouts may be used in yard tracks where geometric constrains make the use of Number 11 turnout impractical.

Figure 4-3: Low and Medium Speed Turnouts

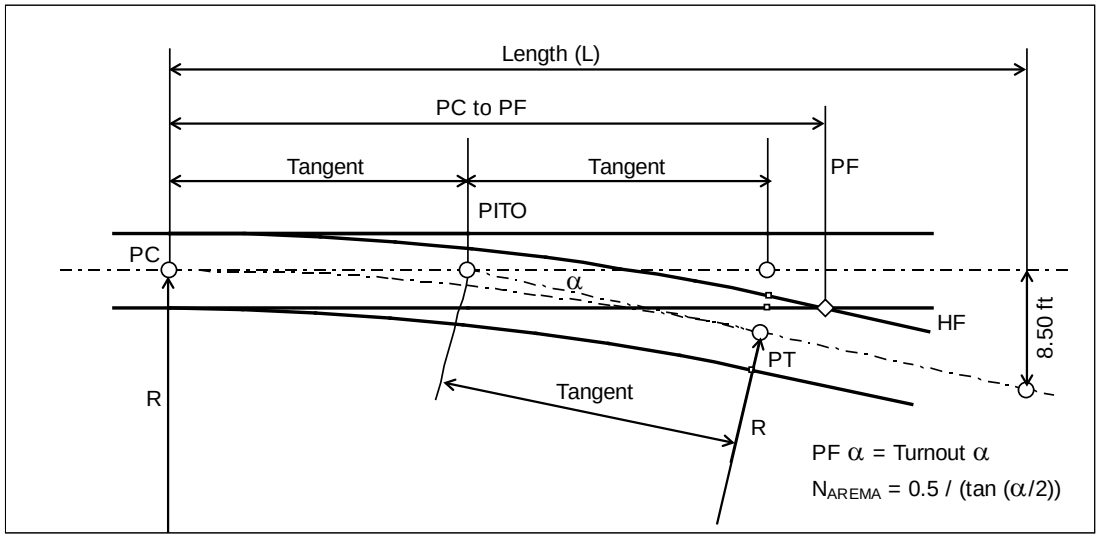

Table 4-6: Low and Medium Speed Turnouts

Number	9	11	15	20	24
Defined Angle (degrees/minutes/seconds)	6d21m35s	5d12m18s	3d49m06s	2d51m51s	2d23m13s
Radius	620 feet	950 feet	1750 feet	3250 feet	4650 feet
Tangent	34.44 feet	43.18 feet	58.33 feet	81.25 feet	96.87 feet
Lead, PC to ½ inch PF	77.19 feet	95.43 feet	129.58 feet	176.25 feet	210.87 feet
PC to 8.5 feet separation	110.71 feet	136.49 feet	185.69 feet	251.14 feet	300.79 feet
Tangent Rail, ½ inch PF to Curve PT	8.31 feet	9.07 feet	12.92 feet	13.75 feet	17.13 feet
Maximum Diverging Speed	20 mph	25 mph	35 mph	45 mph	55 mph
Unbalance at Max. Diverging Speed	2.58 inches	2.63 inches	2.80 inches	2.49 inches	2.61 inches

Notes:
Values in table are for illustration purposes and so are generally given to 2 decimal places. This is not to be construed as the necessary limit for the alignment calculations.

Spatial considerations, including space beside and around turnouts can be found in the *Trackway Clearances* chapter. For track components, see the *Trackwork* chapter.

To provide for future OCS design and construction, sufficient distance is required between:

1. two adjacent points of switches of adjacent universal crossovers
2. point of switch of turnout and adjacent point of switch of crossover

RFP No.: 13-57 – Addendum No. 5 - 10/09/2014

The preferred distance between adjacent switch points along the main tracks is 600 feet. The minimum distance between adjacent switch points along the main track is 400 feet. This requirement does not apply for the yard turnouts. Run time considerations are not relevant to the location and spacing of low and medium speed turnouts. Vehicle twist and relative end offsets are the controlling factors. It is recommended to provide at least 75.00 feet of straight track in advance of a switch. Where practical, these turnouts shall be spaced so that the length between turnouts is at least equal to the sum of vehicle truck centers plus one end overhang. Where the usage of switches that are point to point is such that trains are unlikely to use both turnouts, the switch points may be placed closer, down to 30 feet apart. It is desirable that the track off the frog end of the turnout be straight to at least the end of the switch tie set, which may be taken as the point at which the tracks are 8.50 feet apart. In the development of crossovers, track ladders, and track fans, it will be seen that these values are not always achievable.

4.9 Non-Standard Turnouts

Turnouts on curves or in locations where standard turnouts cannot be used shall be designed as special cases. These turnouts shall be designed such that the lateral forces and rates of change in these forces are similar to those in standard design turnouts.

For all turnouts, the Eu shall not exceed 3.0 inches on either side of the turnout.

For high-speed turnouts, the following governs:

- Switch end spiral having a transition rate not more than 4.5 inches per second
- Eu at the point of switch: 1.5 inches
- If the curve does not continue beyond the turnout on the frog end, a frog end spiral having a transition rate of not more than 4.5 inches per second shall be applied.
- Minimum time over any turnout segment or curve connected to a turnout shall be approximately 1.0 second, and not less than 0.9 seconds.

For low and medium speed turnouts, compound internal curves shall not be used. If a curved frog is used, the end of the curve shall be outside the casting portion of the frog.

4.10 High-Speed Crossovers

Crossovers in high-speed turnouts are more complex, as the curve continues through the frog. In order to place crossovers for 60 mph or faster between tracks at the standard track center spacing of 16.50 feet, the frog end spiral must be shortened to keep the spiral out of the frog. The length of the 2 spirals combined achieves the minimum 1.0 second run time when they are considered as 1 design element. Figure 4-4 shows the normal relationship between crossover components in a crossover between 16.50 feet track centers.

RFP No.: 13-57 – Addendum No. 5 - 10/09/2014

Figure 4-4: High-Speed Crossovers

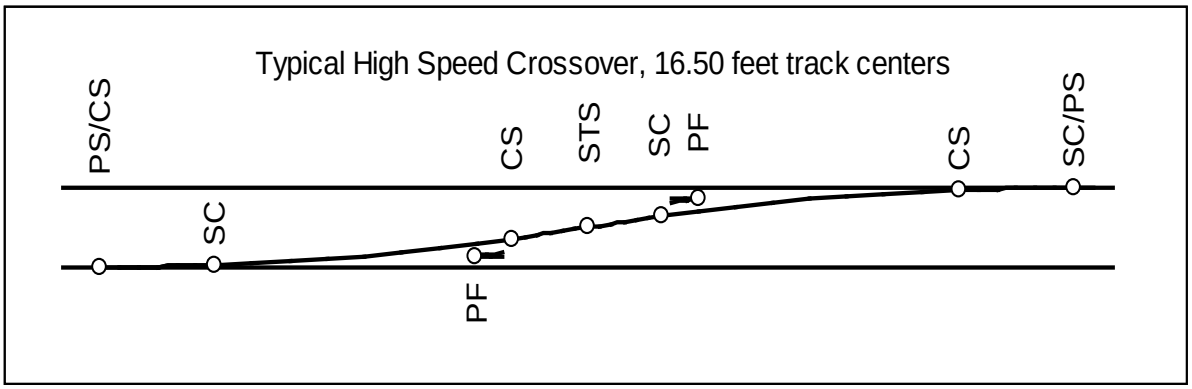

Table 4-7: High-Speed Crossovers – 16.50 feet Track Centers

Geometry of Turnout and its Segments, in feet unless stated otherwise				
Design Speed	60 mph	80 mph	110 mph	150 mph
Track Centers	16.50	16.50	16.50	16.50
Total Length along main track	618.74	829.97	1,138.63	1,583.92
Total Length along Crossover Track	619.05	830.20	1,138.80	1,584.04
Turnout Entry Radius	10,000.00	18,000.00	34,000.00	80,000.00
Turnout Body Radius	5,000.00	9,000.00	17,000.00	32,000.00
Switch Spiral Length	90.00	120.00	160.00	220.00
Frog Spiral Length	45.00	62.00	85.00	115.00
Angle at STS	3d01m31s	2d 15m15s	1d38m28s	1d11m49s
Length of Entry Curve	0.00	0.00	0.00	0.00
Length of Turnout Body Curve	173.52	233.10	324.40	457.02

Notes:
Values in table are for illustration purposes and so are generally given to 2 decimal places. This is not to be construed as the necessary limit for the alignment calculations.

For high-speed crossovers between track centers of between 16.50 feet and 21.50 feet, longer spirals between turnouts may be used, but with the limitation that they be kept out of the frog. Where the track centers are 21.50 feet or greater, a full length spiral shall be used. High-speed crossovers shall not be used between tracks having track centers of under 16.50. For other spatial requirements see the *Trackway Clearances* chapter.

4.11 Low and Medium Speed Crossovers

The essence of a crossover is 2 turnouts connected at their frog ends. This occurrence is common. The distance of concern in crossovers is the central tangent, shown as "Tangent" in

RFP No.: 13-57 – Addendum No. 5 - 10/09/2014

Figure 4-5. For close track centers and small turnout numbers, this distance can be less than the truck centers plus one end overhang that is the minimum tangent distance between reversing curves.

Figure 4-5: Low and Medium Speed Crossovers

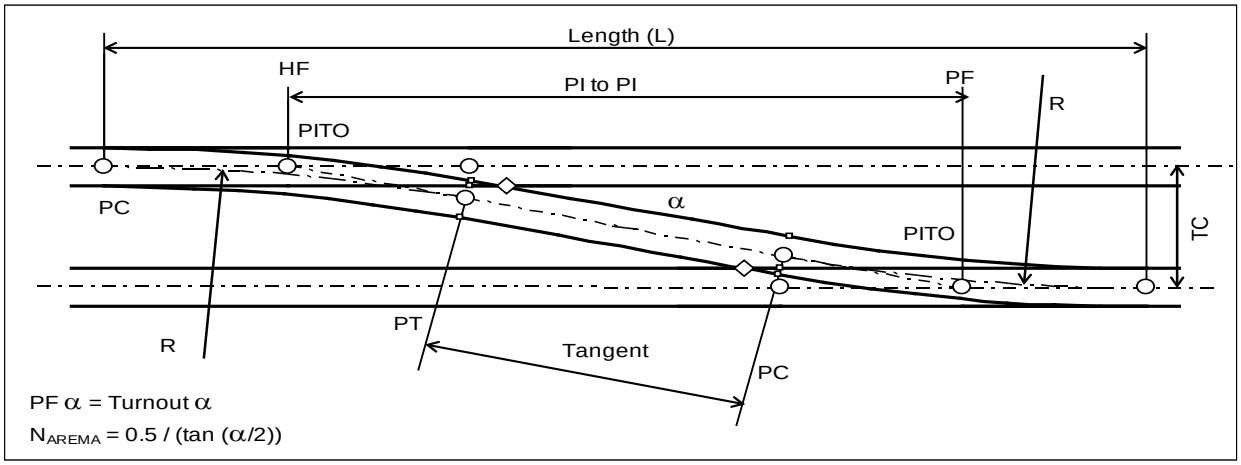

Table 4-8: Low and Medium Speed Crossovers

Number	9	11	15	20	24
Defined Angle	6d21m35s	5d12m18s	3d49m06s	2d51m51s	2d23m13s
Radius	620 feet	950 feet	1750 feet	3250 feet	4650 feet
Allowed Speed	20 mph	25 mph	35 mph	45 mph	55 mph
Length (L) end to end of crossover, 15.00 feet track centers	203.47 feet	251.02 feet	341.42 feet	462.31 feet	553.60 feet
PITO to PITO distance on tangent, 15.00 feet track centers	134.58 feet	164.66 feet	224.75 feet	299.82 feet	359.85 feet
Change in length per 1.00 foot change in track centers, either of the above	8.972 feet	10.978 feet	14.983 feet	19.988 feet	23.990 feet
Tangent length on diagonal, 15.00 feet track centers	66.53 feet	78.98 feet	108.58 feet	137.69 feet	166.41 feet
Change in length per 1.00 foot change in track centers	9.03 feet	11.02 feet	15.02 feet	20.01 feet	24.01 feet

Notes:
Values in table are for illustration purposes and so are generally given to 2 decimal places. This is not to be construed as the necessary limit for the alignment calculations.

RFP No.: 13-57 – Addendum No. 5 - 10/09/2014

Since small radii curves in turnouts result in short component life and working the equipment to near its limits of movement is undesirable, it is recommended that the turnouts in crossover be Number 11 or larger. It is also recommended to keep the track centers at 15.00 feet or larger for this and other reasons.

4.12 Double Crossovers (Scissors Crossovers)

Where space is constrained and crossovers allowing universal moves are desired, crossovers may be overlapped to form a double crossover. This form of crossover is sometimes called a scissors crossover, as on some systems the term "double crossover" means two single crossovers of opposite hand placed in succession.

Double (scissors) crossovers shall be used only where their use keeps other aspects of the alignment from being reduced to less than minimum values due to their high cost and maintenance requirements. Double crossovers using high-speed turnouts shall not be used unless the track centers are wide enough that the crossing diamond may be straight, and preferably where the crossing angle is equal to or less than that in a Number 15 double crossover.

The following double crossovers may be used:

- Number 9 (Shall not be used in main tracks)
- Number 11 at 15.00 feet or larger track centers (Shall not be used in main tracks)
- Number 15 at 15.00 feet or larger track centers

Double (scissors) crossovers with frog angles larger than that of a Number 15 turnout require movable center frogs, and therefore should be used only where use of smaller crossovers affects run time.

4.13 Track Layout along Station Platforms

Turnouts connecting the platform track with the main track shall permit an operating speed of 60 mph or faster. Other than the main line turnouts, the normal train operation into or out of the platform shall not pass through the curved side of turnouts.

The station platform track between the entry turnout and the exit turnout along the main track shall have a 3,350 foot minimum length centered symmetrically on the midpoint of the station platform.

Platform tracks shall be tangent through the platform length and to a distance of not less than 75 feet beyond the ends of the platform. If the platform track must be curved, the largest

RFP No.: 13-57 – Addendum No. 5 - 10/09/2014

practical radius of curve shall be used, and other means used to provide for accessibility in accordance with Americans with Disabilities Act (ADA) requirements.

Other tracks connected to platform tracks shall turn out of the tangent portion of the platform tracks. Turnouts shall be placed not less than 75 feet beyond the ends of the platform.

Figure 4-6: Detail of Station Entry/Exit High-Speed Turnout and Return Curve

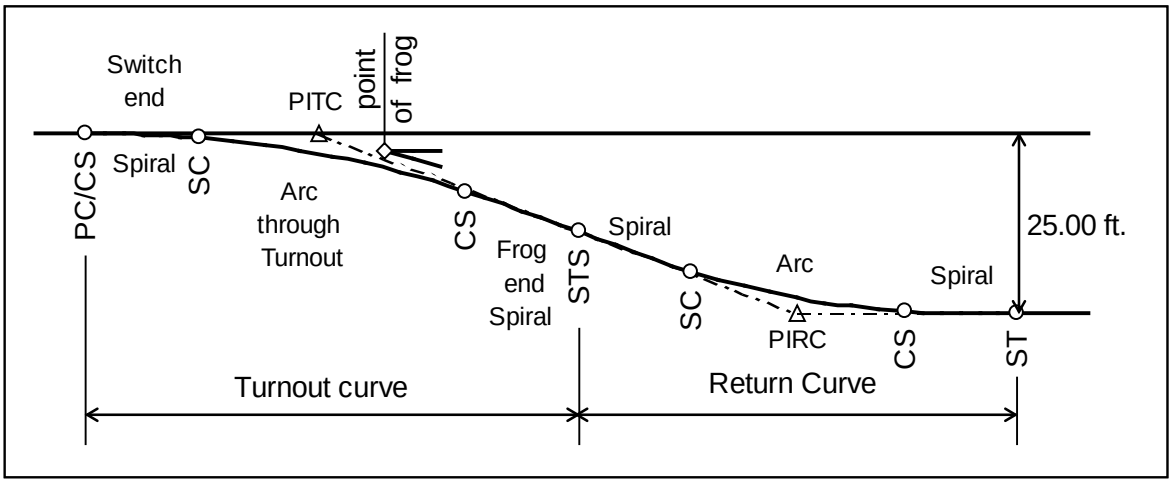

Table 4-9: Geometry of Station Entry/Exit High-Speed Turnouts and Return Curves

Geometry of Connection and its Segments, in feet unless stated otherwise			
Design Speed	60 mph	80 mph	110 mph
Platform Track Offset	25.00	25.00	25.00
Turnout Entry Radius	10,000.00	18,000.00	34,000.00
Turnout Body Radius	5,000.00	9,000.00	17,000.00
Switch Spiral Length	90.00	120.00	160.00
Frog Spiral Length	90.00	120.00	160.00
Return Curve Radius	4,000.00	7,000.00	13,500.00
Curve Spiral Length	90.00	120.00	160.00
Total Length along main track	743.65	991.80	1,364.60
Total Length along Platform Track	744.25	992.25	1,364.92
Angle at STS	3d44m07s	2d 48m04s	2d02m17s
Length of Entry Curve	0.000	0.000	0.000
Length of Turnout Body Curve	213.47	290.02	404.71
Length of Return Curve	170.78	222.24	320.21

Notes:
Values in table are for illustration purposes and so are generally given to 2 decimal places. This is not to be construed as the necessary limit for the alignment calculations.

RFP No.: 13-57 – Addendum No. 5 - 10/09/2014

The turnouts for storage and refuge tracks at passenger stations will depend upon the operational requirements. Turnouts smaller than Number 11 shall not be used. Spirals need not be applied to the return curve for a stub end track. If the track is for yard access instead of to storage, a spiral appropriate to the design speed of the access track shall be applied.

4.14 Access Tracks to Yards and Maintenance Facilities

The criteria contained in this section are intended for the geometric design of tracks connecting the mainline to yards, Maintenance of Infrastructure (MOI), terminal layup and storage facilities. See section 4.13 for the geometric design of tracks connecting the mainline to station platforms.

Site constraints may lead to large distances between mainline access points and these facilities. For the purpose of minimizing time required to clear revenue tracks, these tracks shall be designed much like a secondary mainline railroad. The design speeds of the turnouts that are used between the mainline and these tracks shall be 60 mph. The design speed of crossovers between main tracks associated with these turnouts shall be 60 mph unless they also serve another purpose that requires a higher speed.

The minimum length between mainline turnout fouling point and the first yard or MOI turnout shall be not less than 1600 feet. The following are the minimum/maximum design parameters for these tracks

- Design speed: 60 mph, site conditions permitting. Where conditions do not permit 60 mph, a lower design speed may be used. This lower design speed shall be as high as site conditions permit.
- Minimum Curve Radii: 900 feet
- Maximum Actual Superelevation (E_a): 3 inches
- Maximum Unbalanced Superelevation (E_u): 3 inches
- Spiral Lengths (Clothoid): 62 feet per inch of superelevation or unbalanced superelevation, whichever gives the greatest length
- Minimum Length of Tangent between curves in the same direction: 0 feet. Compound curves must be joined by spirals of length equal to 62 feet per inch of change in superelevation or unbalance, whichever gives the greater length
- Minimum Length of Tangent between reversing curves. The length may be reduced by one-half the combined lengths of the adjacent spirals. $L_{min} = 9{,}400{,}000 / (R_1)^2 + 9{,}400{,}000 / (R_2)^2$, but not less than 40 feet
- Recommended Turnouts: not less than Number 15
- Minimum Turnouts: Number 11

RFP No.: 13-57 – Addendum No. 5 - 10/09/2014

- Minimum Track Centers, not including allowance for Overhead Contact System (OCS) poles, drainage, walkways, roadways, or other facilities that will be placed between tracks in some areas: 15.00 feet
- Minimum Track Centers on small radius curves may need to be larger than the values given above. If the following calculation results in a larger value, this value shall be used: 14.75 + 1,100 / Radius (in feet), but not less than 15.00 feet
- Maximum Grade: 2.50 percent
- Vertical Curves: 100 feet minimum length with a rate of change of not more than 1.00 percent per 100 feet

4.15 Yards Tracks

The specific track arrangement for each yard will depend upon the purpose of the yard and tracks in the yard. Therefore the basic layout will be determined by operational requirements. The requirements developed in this chapter are therefore limited to those of a general nature except for those relating to geometric constraints due to:

- Curvature related constraints due to vehicle characteristics
- Track length constraints due to train and individual vehicle length
- Profile and grade related issues

Other than the tracks connecting the yards to the revenue tracks, the design parameters for these tracks are speed-independent.

4.15.1 Connecting and Switching Tracks Inside Yards

The following standards apply to tracks on which trains will not be stored or left standing but are installed for the purpose of connections between yard tracks and yard access tracks within the area designated as yards, all types, and other low speed tracks.

- Minimum Curve Radii: 620 feet
- Minimum Length of Tangent between curves in the same direction: 0 feet (compound curve)
- Minimum Length of Tangent between reversing curves: $L_{min} = 9{,}400{,}000 / (R_1)^2 + 9{,}400{,}000 / (R_2)^2$, but not less than 40 feet.
- Minimum Turnout Number: 9 (internal radius 620 feet). If in a track with high volume traffic, the minimum shall be a Number 11.
- Minimum Track Centers: 15.00 feet
  - On small radius curves, minimum track centers shall be increased if the following calculation results in a larger value: 14.75 + 1,100 / Radius (in feet), but not less than

RFP No.: 13-57 – Addendum No. 5 - 10/09/2014

15.00 feet. This value does not include allowance for OCS poles, drainage, walkways, roadways, or other facilities that will be located between tracks.

- Track centers shall be increased for OCS poles, light poles, drainage, signal masts, equipment cases, walkways, service aisles or other facilities placed between tracks.Maximum Grade: 2.50 percent
- Minimum Length of Vertical Curve: 50 feet with a rate of change of not more than 2.00 percent per 100 feet.

For additional criteria on walkways and service aisles see *Civil* chapter.

4.15.2 Servicing and Storage Tracks

The following standards apply to those portions of tracks on which trains or equipment will be left standing, serviced, or stored and do not apply on the approach portions of those tracks. These standards apply only to the usable length of track and any overrun distances or, in the case of stub end tracks, the portion between usable length and the bumping post or other end of track device.

- **Usable Length of Track** – The usable length of track is defined as the length of track which is usable for its defined purpose. Usable length does not include space for bumping posts or other end of track devices, defined set back from the end of track device, defined set back from signals, space occupied by road crossings, turnouts to other tracks, and any other feature that render the equipment on the track inaccessible to service, if the purpose of the track is to hold equipment while being serviced, or unusable for storage if the purpose of the track is to store passenger trains or other equipment.

  Usable length of track for train servicing and storage tracks is defined based on the maximum potential train length. Sufficient length beyond train length to hold a switch engine shall also be provided. Minimum length shall be 1400 feet.

  Usable length of track for other purposes: For tracks not intended to hold full length trains, the usable length shall be defined by the length of equipment that it is intended to hold plus some allowance for placement of equipment, and desirably additional length sufficient to hold a switch engine. Minimum length shall be 75 feet plus the length to be occupied by equipment.
- **Minimum Curve Radii for curves within the usable length** – 10,000 feet
- **Minimum Grade within the usable length** – between 0.00 percent and 0.20 percent or between 0.30 percent and 0.50 percent down from the access point. In the case of double ended tracks, the low end access track shall not be lower than the highest point within the portion designated as usable length.
- **Minimum Length of Vertical Curves** – 50 feet minimum length with a rate of change of not more than 1.00 percent per 100 feet.

RFP No.: 13-57 – Addendum No. 5 - 10/09/2014

- **Minimum Track Centers, between tracks on which servicing of equipment will be performed** – alternating spacing of 28.00 feet and 20.00 feet. These track centers provide space between tracks for roadways on the wider centers and cart paths or walkways on the narrower centers. However, these do not include allowances for OCS poles, light poles, drainage, signal masts, electrical cases, inspection platforms and pits, or other facilities that may interfere with the use of the aisles as traveled ways. Wider track centers shall be provided where these facilities are needed.
- **Minimum Track Centers, between tracks on which no servicing of equipment will be performed** – 15.00 feet. Wider track centers shall be provided if OCS poles, light poles, drainage, signal masts, electrical cases, major walkways or other facilities must be placed between tracks.

4.15.3 Simple Track Ladders

A track ladder is a series of turnouts used to connect a group of parallel tracks to each other in conjunction with either an approach track or a stub end track to permit equipment to be accessed or shuttled between tracks. The most common form of connection of multiple parallel tracks is a straight ladder, also called a simple ladder. A simple ladder is a series of turnout connected end to end so as to access all the parallel tracks. Its primary advantage is its simplicity in design, construction and maintenance. Its disadvantage is its length when more than a few tracks are involved.

Figure 4-7: Simple Ladder (4 Tracks Illustrated)

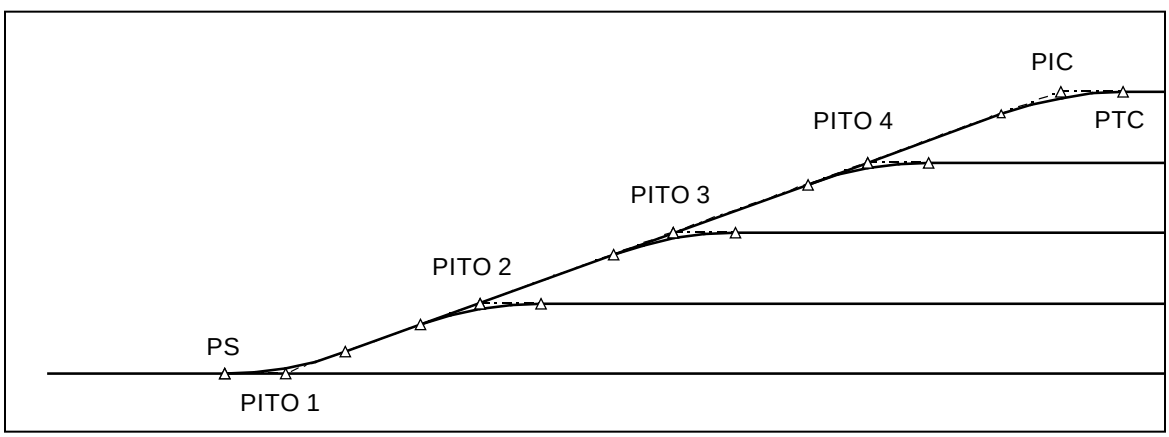

Calculation of the points on these ladders is straightforward. The Point of Switch (PS) to Point of Intersection of the Turnout (PITO) 1 dimension is a property of the turnout used. The PITO 1 to PITO 2 and PITO 2 to PITO 3 and so forth lengths parallel to the tracks are simply track spacing divided by the tangent of the frog angle of the turnout. PI to PI lengths along the ladder track are track spacing divided by the sine of the frog angle of the turnout. When summed and the length of the final curve tangent added, the length of the entire ladder is determined.

RFP No.: 13-57 – Addendum No. 5 - 10/09/2014

Dimensions for the basic ladder connecting tracks at 15.00 centers using Number 11 turnouts are as follows:

- Between PITOs parallel to the lead track: 164.66 feet
- Between PITOs on the ladder track: 165.34 feet
- Total distance, PS entry turnout to curve PT for the case illustrated: 745.01 feet
- Total PS to PS distance for double ended tracks with 1,500 feet clear length: 2,990 feet
- Length utilized by ladder for each additional track: 329.33 feet (double ended)

When more than a few tracks are involved, the total length of this arrangement quickly becomes impractical, particularly where track centers are large. Thus, the need for compound ladders to shorten the overall yard length.

4.15.4 Double Angle Track Ladders

Considerable space can be saved by use of double angle ladder tracks, as the larger angle considerably reduces the length required to achieve the required offsets. The following is provided for assistance in understanding the design of multi-track ladder tracks.

First, look at the situation with the same number and spacing of tracks as used in the simple ladder illustration. The single frog angle ladder using Number 11 turnouts and 15.00 feet track centers was 745 feet long from first point of switch to the point of development of the full width. By taking only one track off the outside, the length is reduced to approximately 580 feet, a saving in length of over 320 feet if the yard is double ended.

This method can be carried forward with additional tracks to whatever extent is necessary. The greater the number of tracks, the greater is the saving in length. For the illustrated six diverging track arrangement, the length from beginning point to end of last curve is about 734 feet, using Number 11 turnouts. The same number of tracks using a simple ladder would utilize approximately 1074 feet. Thus, for a double ended arrangement, the length saving is 680 feet.

The greater the number of tracks, the greater is the savings in overall yard length. For large numbers of tracks, the arrangement can be carried at least one step further to go to a triple ladder. Figure 4-8 and Figure 4-9 illustrate the nature of these savings.

When developing this form of track arrangement, the need to provide space for switch machines must not be overlooked. In addition, with these more complex track ladder arrangements, consideration must be given to the location of OCS poles since complex track layouts equate to complex overhead wiring layouts, including the need for wire termination poles and downguys.

RFP No.: 13-57 – Addendum No. 5 - 10/09/2014

Figure 4-8: Double Ladder (4 Diverging Tracks Illustrated)

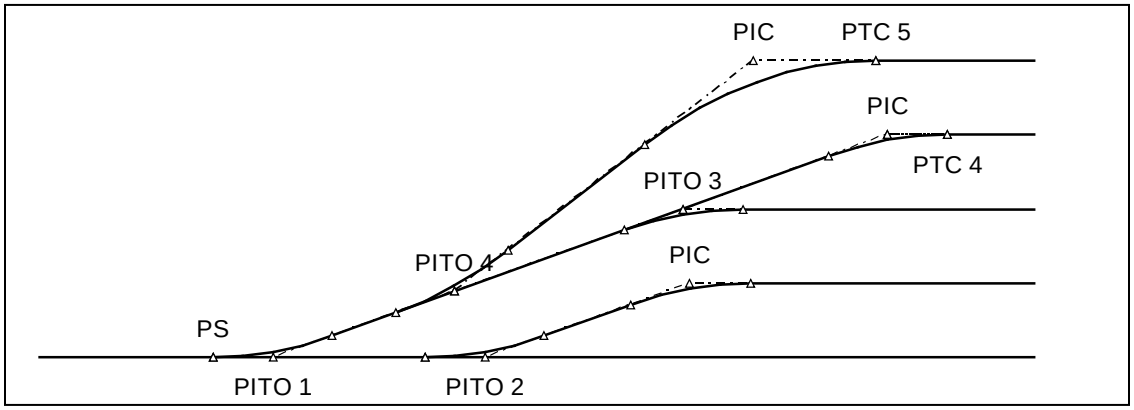

The following considerations shall be used in the development of these designs:

- **Separation at switch point** – Recommended: 9.00 feet, Minimum: 9.0 feet.
- **Space between track centers** – Recommended: 20.0 feet, Minimum 18.0 feet.
- **Space between track centers with switch points approximately opposite** – Recommended: 25.0 feet; Minimum 20.0 feet; if at least one switch machine can be turned away.

The above considerations are required to provide space for the switch tie sets of adjoining turnouts to fit together without overlapping. While overlapping tie sets are constructible, these are undesirable because they create the need for non-standard, site-specific ties and fixtures that add to yard cost and complexity. These space requirements generally will provide adequate clearance for switch machines to be located clear of adjacent tracks. However, the specifics of each yard layout may create localized conditions of interference. Ultimately the yard ladders must be laid out with dimensionally accurate switch machines and tie layouts, and adjacent roads and facilities must be overlaid to verify fit.

Figure 4-9: Double Ladder, Track Space Requirements (6 Diverging Tracks Illustrated)

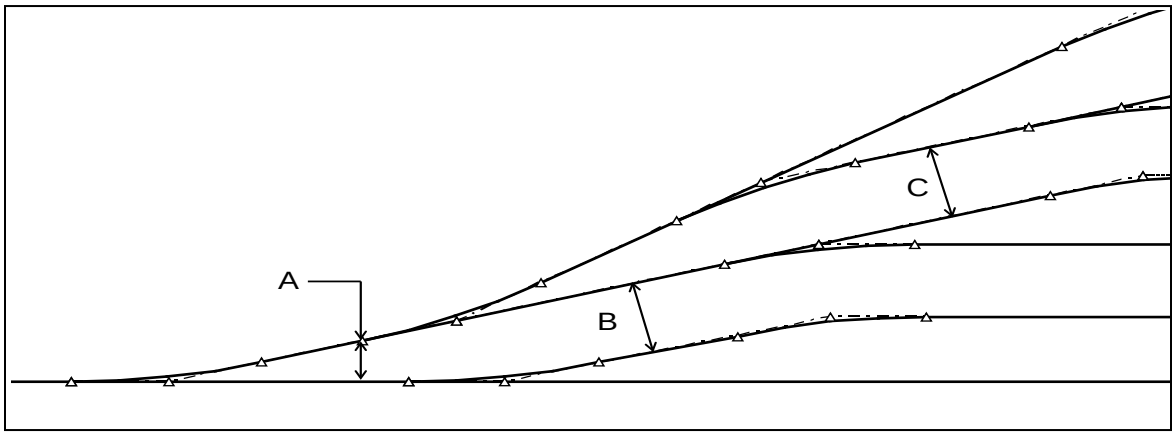

RFP No.: 13-57 – Addendum No. 5 - 10/09/2014

Chapter 7

Civil

RFP No.: 13-57 – Addendum No. 5 - 10/09/2014

Revision	Date	Description
0	07 Mar 12	Initial Release, R0
1	May 2013	Revision 1
2	Sept 2014	Revision 2

RFP No.: 13-57 – Addendum No. 5 - 10/09/2014

Table of Contents

7 CIVIL 7-1
7.1 Scope 7-1
7.2 Regulations, Codes, Standards, and Guidelines 7-1
7.3 Grading, Side Slopes, and Retaining Walls for Roadways and Sites 7-2
7.3.1 Side Slopes 7-2
7.4 Construction Site Best Management Practices 7-3
7.5 Slope/Surface Protection Systems Best Management Practices 7-3
7.6 Site Work – Non-Authority Facilities 7-4
7.6.1 Roadways 7-4
7.6.2 Traffic Control Devices 7-5
7.6.3 Sidewalk, Driveways, Curb Cuts 7-5
7.6.4 Miscellaneous Facilities 7-6
7.7 Site Work – Authority Facilities 7-6
7.7.1 Authority Roadways 7-6
7.7.2 Site and Roadway Geometrics 7-9
7.7.3 Traffic Control Devices 7-13
7.7.4 Signage 7-13
7.7.5 Parking 7-14
7.7.6 Sidewalks and Driveways 7-17
7.7.7 Walkways and Cable Trough 7-17
7.7.8 Service Aisles 7-19
7.7.9 End-of-Line Walkway 7-19
7.7.10 Crosswalks 7-20
7.7.11 Emergency Stairs 7-20
7.7.12 Maintenance Access 7-20
7.8 Access Control Devices 7-21
7.8.1 Access Control 7-21
7.8.2 Access Control by Type of HST Trackway 7-26
7.8.3 Access Control by Type of Facility 7-30
7.8.4 Access Control at Other Locations 7-31
7.9 Wildlife Crossing 7-34
7.10 Maintenance and Protection of Traffic during Construction 7-34
7.10.1 Railroad Operations 7-35

Tables

Table 7-1: Stall Dimensions (in feet) 7-15
Table 7-2: Disabled Parking Spaces 7-16
Table 7-3: Access Control - Gates 7-25
Table 7-4: Access Control Fencing – Trackway 7-30
Table 7-5: Access Control Fencing – Authority Facilities 7-31
Table 7-6: Access Control Fencing – Other Locations 7-34

RFP No.: 13-57 – Addendum No. 5 - 10/09/2014

Figures

Figure 7-1: Slope Rounding, Stepping, Terracing, and Contouring 7-4
Figure 7-2: Access Road Dead End Turn-Around (Emergency Vehicle Staging) 7-8

RFP No.: 13-57 – Addendum No. 5 - 10/09/2014

Acronyms

AASHTO	American Association for State Highway and Transportation Officials
AD	Access Deterring
ADA	Americans with Disabilities Act
AR	Access Restricting
BMP	Best Management Practice
Caltrans	California Department of Transportation
CCR	California Code of Regulations
CHSTP	California High-Speed Train Project
HST	High-Speed Train
MOI	Maintenance of Infrastructure
MUTCD	Manual on Uniform Traffic Control Devices
OCS	Overhead Contact System
RSM	Rolling Stock Maintenance
SA	Station Area
SWPPP	Storm Water Pollution Prevention Plan

RFP No.: 13-57 – Addendum No. 5 - 10/09/2014

7 Civil

7.1 Scope

This chapter provides design criteria to be used in the civil/site design and related work including grading, slope protection, erosion control, site work for Authority's and non-Authority's facilities, access control, and maintenance and protection of traffic during construction.

7.2 Regulations, Codes, Standards, and Guidelines

Refer to the *General* chapter for requirements pertaining to regulations, codes, and standards. The following codes, guidelines, and references were used in the development of this chapter.

- Americans with Disability Act (ADA) Standards for Transportation Facilities adopted by 49 CFR part 37
- California Code of Regulations (CCR)
  - Title 24, Part 2 – California Building Code
  - Title 24, Part 9 – California Fire Code
- California Public Utilities Commission (CPUC), Applicable General Orders
- American Association for State Highway and Transportation Officials (AASHTO)
  - A Policy on Geometric Design of Highways and Streets Roadside Design Guide
- American Railway Engineering and Maintenance-of-Way Association (AREMA) Manual for Railway Engineering
- California Department of Transportation (Caltrans)
  - Standard Specifications
  - Standard Plans
  - Highway Design Manual
  - California Manual on Uniform Traffic Control Devices (MUTCD)
  - Stormwater Quality Handbooks

RFP No.: 13-57 – Addendum No. 5 - 10/09/2014

7.3 Grading, Side Slopes, and Retaining Walls for Roadways and Sites

For embankments, cuts, retaining walls, etc. required to support the California High-Speed Train (HST) trackway, refer to the *Geotechnical* chapter and the *Structures* chapter for design requirements.

Areas of construction shall be cleared, grubbed, and stripped. Areas disturbed by construction shall be protected by an erosion control system. Refer to Section 7.4 Construction Site Best Management Practices (BMPs) for criteria and standards.

Construction of fills shall be a controlled fill. Subgrade preparation and compaction shall be as recommended by Geotechnical Engineer.

Storm runoff (and ground water, if applicable) flow shall be prevented from infiltrating the trackbed. Cut and fill side slopes shall include earth or concrete intercept ditches on top of a cut, on a face of a slope and between the trackbed and a slope, and benches with maintenance access. For additional drainage requirements, refer to the *Drainage* chapter.

Due to limited space, a portion of or the entire slope may be replaced by a retaining wall. The same requirements for preventing the storm runoff/groundwater from entering the trackbed shall apply; therefore retained trackway shall include intercepting ditches. Tiered retaining wall trackway shall include benches with construction and maintenance access. In retained trackway, storm runoff/groundwater shall be collected by an underdrain system. For additional drainage requirements, refer to the *Drainage* chapter.

Permanent erosion control for cut and fill slopes shall be provided after completion of earthwork.

Landscaping design shall comply with requirements of the *Stations* chapter.

Retaining walls that do not support the HST trackway shall be designed per *Caltrans Standards* or the requirements of the authority having jurisdiction, including requirements for weep holes.

7.3.1 Side Slopes

Design of cut and fill slopes shall be based on geotechnical evaluation of soil and materials for construction of embankment or excavation and geotechnical recommendations for slope stability, including steepness and depth/height of cut and fill slopes, height between tiers, use of filter fabric, required material compaction and other elements of cut or fill for trackway.

Side slopes shall be as flat as available right-of-way permits, except that slopes flatter than 10 horizontal to 1 vertical shall not be used.

Where heights are less than 4 feet, slopes shall be 4 horizontal to 1 vertical or flatter. When the right-of-way is restricted, the following applies:

RFP No.: 13-57 – Addendum No. 5 - 10/09/2014

- Cut slopes shall be 2 horizontal to 1 vertical, unless otherwise recommended by the Geotechnical Engineer. The top of cut slopes, other than those in rock, shall be rounded, recommended 10 feet and minimum 2 feet, on both sides of the intersection of the slope planes.
- Fill slopes for embankments shall be 2 horizontal to 1 vertical, unless otherwise recommended by the soils report or the Geotechnical Engineer. Slope rounding shall be used at the top of fill slopes in the same manner as prescribed for cut slopes.

7.4 Construction Site Best Management Practices

Areas of proposed construction shall be cleared, grubbed, and stripped. Construction Site Best Management Practices (BMPs) shall be applied during construction activities to reduce the pollutants in stormwater discharges throughout construction. SWPPP shall conform to the rules, regulations, and practices of the authority having jurisdiction. Designer shall refer to State Water Resources Control Board (SWRCB) for general permitting requirements.

Refer to the *Drainage* chapter for BMPs.

Refer to *Caltrans Standard Plans* for erosion and sediment control standards.

7.5 Slope/Surface Protection Systems Best Management Practices

Surface protection includes permanent design measures that are used alone or in combination to minimize erosion from completed, but not-vegetated (bare) surfaces. Vegetated surfaces may offer advantages to paved surfaces, including lower runoff volumes and slower runoff velocities, increased times of concentration, and lower cost.

Where site or slope-specific conditions would prevent adequate establishment and maintenance of a vegetative cover, hard surfacing shall be considered.

Vegetated surfaces shall consist predominantly of established native grasses and mixed shrubs.

Vegetated surfaces shall be established on disturbed soil areas after construction activities in that area are completed, and after the slope has been prepared. Vegetated surfaces shall only be considered for areas that will support the selected vegetation long-term.

A rough surface may be added to a slope by various methods all of which run parallel to the slope contour over the entire face of the slope. The purpose of slope roughening is to prevent surface erosion that can cause downstream pollution by reducing the velocity of surface runoff. This BMP may also be considered a Low Impact Development (LID) technique.

RFP No.: 13-57 – Addendum No. 5 - 10/09/2014

Roughening and terracing are techniques for creating furrows, terraces, serrations, stair-steps, or track-marks on the soil surface. These treatments increase adhesion of erosion control materials and improve vegetation establishment.

Slope rounding is used to minimize the formation of concentrated flows; and used on embankment or cut slopes, prior to the application of temporary or permanent erosion control.

Slope roughening, terracing, rounding, and stepping, shall be implemented as depicted on Figure 7-1.

Figure 7-1: Slope Rounding, Stepping, Terracing, and Contouring

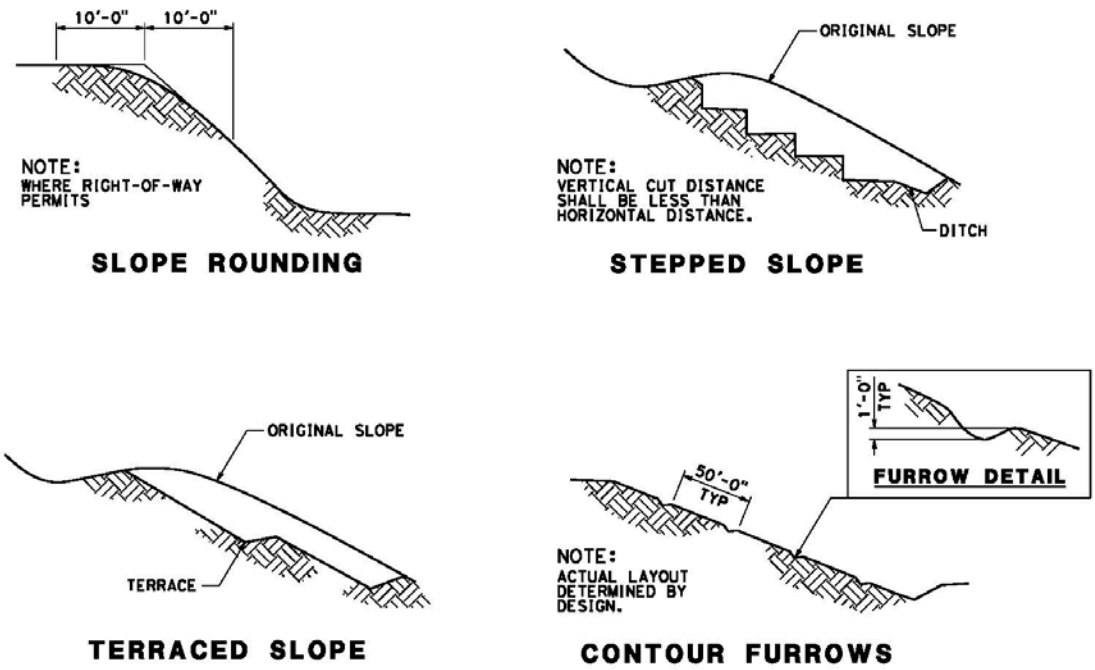

7.6 Site Work – Non-Authority Facilities

Design of publicly and privately maintained facilities including roadways, sidewalks, driveways, traffic devices and signs not under the jurisdiction of the Authority, shall be in accordance with the applicable requirements of the authority having jurisdiction.

7.6.1 Roadways

At-grade Crossings – At-grade (level) roadway crossings of the HST trackway are prohibited and require the grade-separation of existing crossings within the Authority's right-of-way.

RFP No.: 13-57 – Addendum No. 5 - 10/09/2014

Paving – Roadway pavement structural sections shall be designed in accordance with standards of the authority having jurisdiction. If no standards are available, restored pavements shall be of materials in-kind to that originally employed.

7.6.2 Traffic Control Devices

Design of traffic control devices, where roadway intersections are affected by the Authority's project, shall conform to the following:

- Maintenance, relocations of traffic control devices, temporary or permanent, and restoration of these facilities shall be in accordance with the practices and requirements of the authority having jurisdiction and the Authority. Where the authority having jurisdiction has no standards, the *California MUTCD* shall be followed.
- Traffic signal design and details shall conform to the requirements of the authority having jurisdiction.

Roadway signing and striping shall consider the following:

- Roadway signage and striping plans shall be subject to the approval of the authority having jurisdiction.
- Traffic striping, raised pavement markers, delineators, pavement legends, arrows and other markings installed as a part of the project shall be in accordance with *California MUTCD* or the standards of the authority having jurisdiction.
- Work involving relocation, restoration, and temporary installation of street signing shall conform to *California MUTCD* or the standards of the authority having jurisdiction.

7.6.3 Sidewalk, Driveways, Curb Cuts

Sidewalks – Sidewalks shall be in accordance with the standards of the authority having jurisdiction.

Driveways – Driveway minimum and maximum widths and numbers shall be in accordance with the standards of the authority having jurisdiction.

Curb Cuts – Ramps and Curb Cuts shall consider the following:

- Design of curb cuts and ramps shall be in accordance with the applicable provisions of the ADA and Title 24, CCR Part 2, "Regulations for the Accommodation of the Disabled in Public Accommodations."
- Ramps and curb cuts located in third party areas shall follow the standards of the authority having jurisdiction and shall be in accordance with the ADA and Title 24.

RFP No.: 13-57 – Addendum No. 5 - 10/09/2014

7.6.4 Miscellaneous Facilities

Parking Meters – Removal, storage, restoration, and reinstallation of parking meters shall be in accordance with the standards of the authority having jurisdiction.

7.7 Site Work – Authority Facilities

This section establishes criteria and standards for the design of roadways, parking facilities, pedestrian facilities, and driveways, including signage, marking and striping, which are to be maintained by the Authority. Refer to the *Structures* chapter for vehicular load requirements on roadways.

Roadway design in public right-of-way shall be in conformance with the requirements of the authority having jurisdiction.

Additional criteria relevant to this section may be found in the following chapters:

- Trackwork
- Stations
- Drainage
- Geotechnical
- Tunnels
- Facility Power and Lighting Systems
- Overhead Contact System and Traction Power Return System
- Traction Power Supply System
- Communications

7.7.1 Authority Roadways

Authority Roadways shall meet the requirement of AASHTO "A Policy on Geometric Design Highway and Street", for Local Rural Road using vehicle type WB 40 or equivalent, with a minimum 45 foot turning radius, and design speed of 30 mph in the level terrain and 20 mph in rolling and mountainous terrain.

7.7.1.1 Access Roads

Access roads are roads connecting public streets to access gates located along the perimeter fencing of HST trackway and Authority facilities.

Access roads shall be constructed at-grade on exclusive right-of-way where practicable.

Access roads shall be sized to permit access by emergency responders and allow turning and staging of emergency vehicles.

RFP No.: 13-57 – Addendum No. 5 - 10/09/2014

Access roads shall be provided to within 100 feet of tunnel portals and emergency access/egress points. Refer to the *Tunnels* chapter for tunnel portal site criteria.

Traction Power Facilities shall be accessed by access roads. The road shall be designed to accommodate low-load type vehicles. Refer to the *Traction Power Supply System* chapter for additional site and access requirements.

Standalone Radio Sites shall be accessed by access roads. Refer to the *Communications* chapter for additional site and access requirements.

Interlockings shall be accessed by access roads.

Minimum requirements for an access roadway shall consist of the following:

- Roadway Width – Access roads shall have an unobstructed width of not less than 22 feet inclusive of shoulders. If a fire hydrant is located along the road, the minimum roadway width shall be 26 feet per California Code and Regulation, Fire Code.
- Vertical Clearance – Unobstructed vertical clearance of not less than 14.5 feet.
- Pavement – Shall be all-weather use and designed to withstand a 75,000 pound (37.5 ton) load.
- Turning radius – Shall be 45 feet minimum.
- Dead ends – Dead end access roads in excess of 150 feet in length shall be provided with space appropriate for the turn-around of fire apparatus as identified in Figure 7-2. This space can also provide room for emergency vehicle staging.
- Bridges – Shall be designed to withstand 75,000 (37.5 ton) load. Vehicle load limits shall be posted at both entrances to bridges.
- Grade – The gradient for an access road shall not exceed 10 percent. Grades steeper than 10 percent will require approval by the Authority.
- Access Gates – Where gates restrict public access to the access road, such gates shall have a minimum opening of 20 feet, constructed of the swinging or sliding type, the ability to be opened by 1 person.
- There shall be a vehicle turnaround area at the roadway terminus.
- Refer to *Standard and Directive Drawings* for additional details of the access road requirements.

RFP No.: 13-57 – Addendum No. 5 - 10/09/2014

Figure 7-2: Access Road Dead End Turn-Around (Emergency Vehicle Staging)

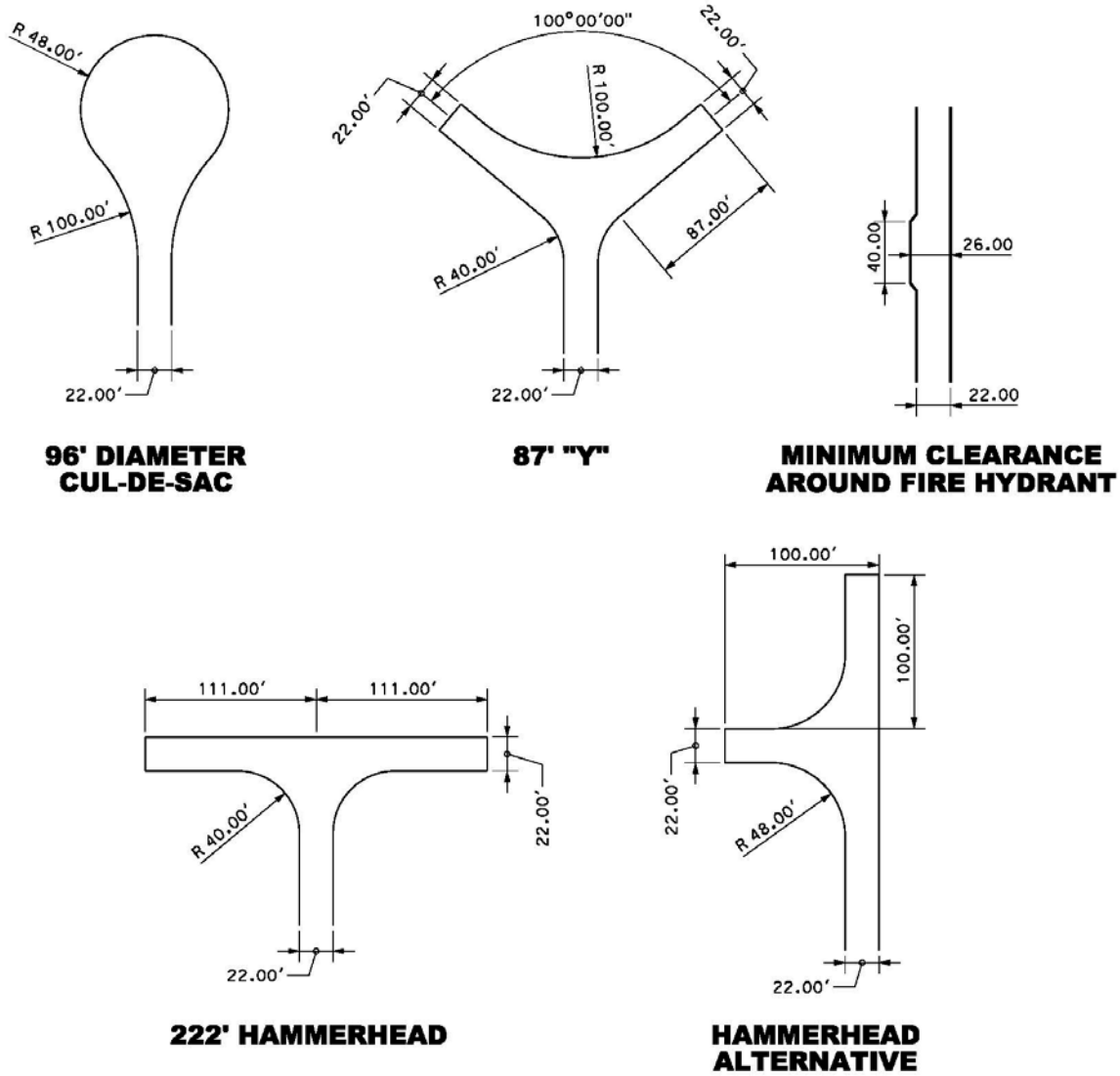

7.7.1.2 Service Roads

Service roads are roads located within the Authority right-of-way for the purpose of inspecting, servicing, and maintaining Authority property.

Service roads allow vehicle access to the various service areas to service trains and onsite equipment. Such roadways shall also serve as fire access roads. A service road or service aisle shall be provided between alternate tracks in yards. Refer to Section 7.7.8 for criteria on Service Aisles.

Minimum roadway width requirements for a service road should match requirements for an access road.

RFP No.: 13-57 – Addendum No. 5 - 10/09/2014

A. Roadways for Rolling Stock Maintenance (RSM) Facilities and Maintenance of Infrastructure (MOI) Facilities

Buildings within a facility shall be accessed by a service road.

A 2-way service road, 24 feet wide with 2 foot un-paved shoulders on each side, follows the interior perimeter of each facility.

For the RSM facilities, a 50-foot wide asphalt "apron" would surround the main shop building to provide access for emergency vehicles to any point around the structure.

Yard traffic at-grade crossings shall be concrete. Refer to the *Trackwork* chapter for criteria.

7.7.2 Site and Roadway Geometrics

7.7.2.1 Grades

A. Parking Facilities

- General
  - 5 percent maximum slope in a parking stall
  - 6 percent maximum slope in a traveled area
  - 2 percent recommended slope in any direction
  - 0.3 percent minimum slope in any direction
- Comply with ADA Standards for Transportation Facilities regarding slopes at parking spaces and access aisles designated for accessible parking. Accessible parking spaces shall be located at an optimum location within the parking lot to provide easy access to the station.
- Driveway Slopes and Ramps
  - 20 percent maximum slope on driveway or ramp
  - 10 percent maximum cross slope of a driveway or ramp
- Transition slopes between the ramp and driveway are required when the slope of the driveway or ramps exceeds 12 percent.

B. Roadways within Authority and Parking Facilities

- Maximum: 6 percent Recommended: 5 percent
- Minimum: 0.5 percent Recommended: 1 percent
- Cross-slope: 2 percent
- Crown cross-section, except on curves

RFP No.: 13-57 – Addendum No. 5 - 10/09/2014

C. Maximum Grade Differential for Roadways within Authority and Parking Facilities

- Crest Vertical Curve: 9 percent
- Sag Vertical Curve: 6.5 percent

Note: Crest and Sag Curves at top and bottom of ramps without parking may exceed these differentials, but shall use a vertical curve as per Section 7.7.2.4.

7.7.2.2 Design Speeds

A. Access Roadways

- Thirty mph in the level terrain and 20 mph in rolling and mountainous terrain

B. Roadways within Authority Facilities and Parking Facilities

- Ten mph

7.7.2.3 Clearances

Refer to the *Trackway Clearances* and *Utilities* chapters for additional criteria on clearances.

A. All Authority Roadways

- Vertical - 14 feet–6 inches minimum
- Horizontal - 2 feet–6 inches minimum from edge of shoulder or face of curb to fences, light standards and pedestrian barriers

B. Parking Facilities

- Vertical - 7 feet–0 inches minimum (with height restrictions noted)
- Minimum 9 feet–6 inches vertical clearance provided for van accessible parking spaces

7.7.2.4 Vertical Curves on Authority Roadways

Crest Curves - $L_{min} = 28\ A$

Sag Curves - $L_{min} = 35\ A$

Where:

L_{min} = minimum vertical curve length

A = Algebraic difference in grades

No vertical curves shall be less than 20 feet.

7.7.2.5 Sight Distance at Intersections

Site distance at intersections shall comply with "A Policy on Geometric Design of Highway and Street," current edition, published by the American Association of State Highway and Transportation Officials (AASHTO).

RFP No.: 13-57 – Addendum No. 5 - 10/09/2014

7.7.2.6 Curbs and Gutters

Curbs shall be Caltrans Curb Type A1-6.

Gutters should be integral with curbs, Caltrans Type A2-6.

Curbs and gutters shall be cast-in-place concrete, and shall be in compliance with *Caltrans Standard Plans and Specifications*.

7.7.2.7 Pavement

A. Roadbed Design

The roadbed cross-section (from top to bottom) shall consist of pavement, aggregate base, aggregate subbase, filter course, and subgrade material. The aggregate subbase course may be eliminated where the subgrade material has a Sand Equivalent of 20 minimum and a Resistance (R) Value in excess of 40 when tested in accordance with California Test Methods CTM 217 and CTM 301, respectively. The filter course shall not be eliminated.

- Pavement shall be dense graded asphalt concrete consisting of asphalt binder and close graded mineral aggregates, Caltrans HMA Type A, unless otherwise required due to special conditions or use.
- Aggregate base shall be used under all pavements.
- Aggregate subbase shall be of a granular material conforming to the class designated.
- Filter course shall consist of 1 layer of filter fabric placed on the subgrade below the aggregate subbase course. The subgrade upon which the filter fabric is placed shall have been compacted to a relative compaction of 95 percent as determined by ASTM D1557.

B. Structural Design of the Roadbed

The required thickness of the individual layers making up the roadbed shall be determined from the following considerations and procedures:

- For purposes of structural design of the roadbed only, the Authority roadways shall be classified according to the character of traffic thereon as follows:
  - **Type A Roadways –** Roadways which will carry truck traffic, except those classified as Type C. Type A roadways may carry passenger car traffic.
  - **Type B Roadways –** Roadways that will carry only passenger cars.
  - **Type C Roadways –** Roadways having a low volume of traffic, on the order of not more than 25 cars or 5 trucks daily, that will be used for service or maintenance purposes, and are not intended for use by the general public. Bicycle paths shall also be classified as Type C.
- Structural design of the roadbed shall be in accordance with the procedure for design of flexible pavements in the *Caltrans Highway Design Manual, Chapter 630, Flexible Pavement*.

RFP No.: 13-57 – Addendum No. 5 - 10/09/2014

- Traffic Indexes to be used shall be as follows:
  - 9.0 for Type A Roadways
  - 7.0 for Type B Roadways
  - 6.0 for Type C Roadways
- Additional gravel equivalent thickness for "Factor of Safety" called for in the *Caltrans Highway Design Manual* Empirical Method shall not be provided for the Authority roadways.
- Structural design of the roadbed shall be reviewed and approved by the responsible Geotechnical Engineer.

- Structural design of the roadbed shall be based on the use of Resistance (R) values, representing the structural quality of the subgrade material. The determination of the (R) value of a given material requires a soil test which shall conform to California Test Method (CTM) 301.
- The thickness of the individual layers of the roadbed shall be determined using data shown above.

C. Other Paved Areas - Roadbed Design

Parking lot roadbed, which includes parking areas as well as aisles and circulation roads, shall consist of the pavement, aggregate base, aggregate subbase, filter course, and subgrade.

Permeable pavements in parking lots shall be used when local conditions permit. Permeable pavement types may include porous asphalt, rubberized asphalt, and pervious concrete.

Paving materials used at parking lot facilities shall have a Solar Reflectance Index (SRI) 29 or higher.

Structural design of parking lots and bicycle paths shall be as follows:

- Parking lots which will contain only passenger cars shall be designed as Type B roadways. Parking lots for vehicles other than passenger cars shall be designed as Type A roadways.
- Bicycle paths immediately adjacent to the station shall be designed as Portland cement concrete sidewalks. Paths away from the station site area shall be asphalt concrete. Most paths will be used occasionally by maintenance vehicles, and therefore will have a pavement structure equivalent to a Type C roadway.

Bus pads shall be as follows:

- Concrete bus pads shall be provided at bus stops which are constructed or reconstructed in conformance with the standards and specifications of the authority having jurisdiction.

RFP No.: 13-57 – Addendum No. 5 - 10/09/2014

- Continuous concrete pads may be required in the vicinity of the station entrance when subject to heavy bus traffic or required by the authority having jurisdiction.
- For bus pad detail, refer to Standard and Directive Drawings.

For bus and taxi loading zone criteria refer to the *Stations* chapter.

7.7.3 Traffic Control Devices

Curb markings, signs and striping used on Authority roadways and parking facilities shall be standard facilities as required by the latest edition of *California MUTCD*.

Traffic signing equipment, materials, and installation processes shall be as specified in the *Caltrans Standard Plans and Specifications* and CPUC GO 75-D.

Placement of signs shall be coordinated with actual site conditions to prevent masking or blocking of safety-sensitive signs.

Authority signage shall be provided at the entrance to the commuter parking area, and pathfinder signs shall be placed to provide directions from state highway routes.

7.7.4 Signage

This section refers to all signage, inclusive of traffic signs noted in Section 7.7.3 on Traffic Control Devices.

Regulatory and safety, transportation, and maintenance of way signs and graphics shall meet the requirements of the applicable regulatory agency.

The following types of signage shall be provided for HST trackway and facilities:

- Location
  - Mile Post
  - Political Subdivision Signs
  - Standard Right-of-Way Sign and Monument Marker
  - No Trespassing Signs
- Maintenance-of-Infrastructure
  - Maintenance Limit Signs
  - Roadway Structures Signs
  - Snowplow Signs
  - Alignment Signs or Markers
  - Elevation Markers

RFP No.: 13-57 – Addendum No. 5 - 10/09/2014

- Transportation
  - Speed Control Signs – Temporary and Permanent
  - Location Signs
- Safety
  - Restricted Clearance Signs
  - Fire Hazard Signs
  - Electrical Hazard Signs
  - Highway Grade Crossing Signs (To be used inside Maintenance Facilities)
  - Barricade Signs (To be used inside Maintenance Facilities)
  - Highway and Barricade Signs
  - Power Operated Switch Signs
  - Warning Signs
  - Directional Signs
  - Identification

For signage requirements at electrical facilities refer to the *Overhead Contact System and Traction Power Return System* chapter.

7.7.5 Parking

For parking lot design within the station area, the Designer shall consider providing adequate designated parking stalls for car share, vans, low-emission vehicles, and security personnel. Security parking shall be located close to the station entrance.

RFP No.: 13-57 – Addendum No. 5 - 10/09/2014

Table 7-1: Stall Dimensions (in feet)

Stall Angle		(Parallel)	45°	60°	90°
Stall Dimension					
Normal Car					
	width	9.0	9.0	9.0	9.0
	length	22.0	18.0	18.0	18.0
Disabled spaces					
	width	—	14.0	14.0	14.0
	length	—	18.0	18.0	18.0
Disabled Van Space					
	width	—	17.0	17.0	17.0
	length	—	18.0	18.0	18.0
Small Car					
	width	—	8.0	8.0	8.0
	length	—	15.0	15.0	15.0
Clear Aisle	width (Roadway)		13.0 (one way)	19.0 (one way)	27.0 (two way)

Note: Parking stalls at wayside facilities shall be angled at 90 degrees with 12 feet width by 18 feet length.

Disabled parking spaces shall be provided in accordance with Title 24, Part 2, Section 1129B, CCR (refer to *Caltrans Standard Plan Accessible Parking Off-Street*). Disabled parking spaces shall be located as near as practical to a primary entrance to a facility (building, station entrance). The space shall be located so that a disabled person does not have to wheel or walk behind parked cars other than his/her own. Pedestrian ways shall be provided so as to ensure an accessible pathway from each such parking space to the facility; walks and sidewalks shall conform to Title 24, Part 2, Section 1133B.7, CCR.

When parking is provided for patrons, employees, or visitors, the minimum number of disabled spaces required is as follows:

RFP No.: 13-57 – Addendum No. 5 - 10/09/2014

Table 7-2: Disabled Parking Spaces

Total Number of Parking Spaces	Number of Disabled Parking Spaces Required
1 – to 25	1
26 – 50	2
51 – 75	3
76 – 100	4
101 – 150	5
151 – 200	6
201 – 300	7
301 – 400	8
401 – 500	9
501 – 1,000	2 percent of total
1,001 – Over	20 plus 1 for each 100 over 1000

Note: One (1) Van Parking Space for every 8 disabled spaces

The requirements in Title 24, CCR, shall be met for other factors such as signage, minimum dimensions of accessible spaces, slope of parking surfaces, and entrances/vertical clearances for parking structures.

For motorcycle parking layout details, refer to *Standard and Directive Drawings*.

Parking structures shall be designed with "Crime Prevention through Environmental Design" principles, including clear lines of sight, well lit, and no areas where persons could secrete themselves or weapons.

For parking lot lighting and electrical charging station requirements refer to the *Facility Power and Lighting Systems* chapter.

7.7.5.1 Parking Facilities for Wayside Facilities

A minimum of 4 parking stalls shall be provided within the fenced area for maintenance personnel at ventilation structures and traction power facilities, unless otherwise indicated on the preliminary engineering documents.

A minimum of 2 parking stalls shall be provided at standalone radio sites.

Parking shall be provided, although not necessarily within fenced areas, for other wayside facilities.

7.7.5.2 Parking Facilities for RSM Facilities and MOI Facilities

A minimum of 150 parking spaces shall be provided in proximity to the facility for management and administrative personnel, visitors, deliveries, and priority parking.

RFP No.: 13-57 – Addendum No. 5 - 10/09/2014

Parking spaces shall be provided for 50 crew, 50 rolling stock preparations, and 150 yard support employees.

7.7.5.3 Multilevel Parking Structures

For Multilevel Parking Structures criteria refer to the *Stations* chapter.

7.7.5.4 Kiss-and-Ride Facilities

For Kiss and Ride Facilities criteria refer to the *Stations* chapter.

7.7.6 Sidewalks and Driveways

7.7.6.1 Sidewalks

Maximum cross slope shall be 2 percent, and match the elevation of existing building(s) finished floor elevation(s), flow away from the building(s).

Minimum slope shall be 0.5 percent.

Federal and State accessibility requirements shall be met for sidewalk areas behind and adjoining driveways, alley openings, and pedestrian ramps.

Minimum sidewalk width shall be 5 feet.

For design details, refer to *Standard and Directive Drawings*.

7.7.6.2 Driveways

Where the Authority's driveways cross sidewalks which are under another authority having jurisdiction, the driveway/sidewalk details shall be governed by the more stringent requirements of either the authority having jurisdiction or the Authority.

Driveway entrances that provide access to RSM Facilities and MOI Facilities shall normally be paved per *Caltrans Standard Plans* details. This pavement shall be considered adequate for normal truck use and for infrequent overloads. Greater pavement thickness shall be provided where warranted by the volumes or type of traffic using the driveway.

7.7.7 Walkways and Cable Trough

This section addresses criteria for retained fill and at-grade walkways. For trench, aerial, and underground walkway criteria refer to the *Structures* and *Tunnels* chapters.

For walkway structural loads refer to the *Structures* chapter.

Continuous 3-foot minimum width walkway(s) shall be provided along the following:

- **Two-track locations** – There shall be 1 outside walkway on each side.

RFP No.: 13-57 – Addendum No. 5 - 10/09/2014

- **Four-track locations (at stations)** – With 2 outer station tracks, there shall be a walkway between the main tracks and the station tracks, along the inter-track fence next to the through tracks.
- **Four-track locations** – There shall be a walkway outside the outermost tracks only.

Walkways shall have a longitudinal slope not greater than 1 inch vertical to 8 inches horizontal.

Walkways along tracks shall be the top of the cable trough where practicable. The covers of the cable trough will form part of the walkway surface.

As the cable trough will also act as part of the emergency walkway, it shall provide an even, stable walking surface without creating a tripping hazard and have a non-slip surface.

Cable trough shall be in line with the top surface of the sub-ballast or bearing base layer.

Cable trough will carry the train control, power, and communications cables required to operate the HST. For dimensions and cable trough layout transition layouts, refer to *Standard and Directive Drawings*.

Cable troughs and connection boxes shall be drained. The drainage within the cable trough shall be provided to drain any percolated surface runoff. The water drained from cable troughs shall be properly diverted into the side drainage system. If drainage material is used for this purpose, the material shall meet the Terzaghi's filter criteria.

Walkway design layouts shall avoid "dead ends".

For walkway envelope, refer to the *Trackway Clearances* chapter.

Where walkways are adjacent to a wall exceeding 5 feet in height above the top of adjacent rail and more than 100 feet in length, the walkway shall be in conformance with top of the adjacent rail. Handrails shall be installed 3 feet – 6 inches above walkway surface providing a route to a safe area. Handrails shall not interfere with the stated clearance envelopes, including the walkway clearance envelope.

Yard walkways shall be paved, 5-foot wide, and located between yard tracks. Refer to *Standard and Directive Drawings* for additional guidance.

7.7.7.1 Stations

A. Walkways at End of Station Platform

Walkways shall provide access to the underside of vehicles and the refuge space below the platform.

The length of the walkway beyond the platform, not including ramps or stairs, shall be 70 feet.

For further guidance and standards refer to the *Stations* chapter.

RFP No.: 13-57 – Addendum No. 5 - 10/09/2014

7.7.8 Service Aisles

Each storage track in yards shall have service aisles for its entire length, from fouling point to fouling point or from end of track to fouling point.

Service aisles shall be continuous, connecting to service roads.

Service aisles shall be paved and a minimum of 10 feet wide without obstructions.

Whenever possible, service aisles shall be located between tracks and serve both adjacent tracks.

Service aisles shall be designed to meet all of the requirements of walkways, except as modified in this section. Refer to *Standard and Directive Drawings*.

No stairs shall be used on service aisles.

Service aisles shall not be located within public areas.

At-grade crossings shall be as follows:

- Service aisles at at-grade crossings with yard tracks shall be avoided whenever possible.
- If an at-grade crossing is required for a service aisle, it shall meet all of the requirements for crosswalks.
- Service aisles crossings shall not be located on main track, nor on any track where the trains speed is in excess of 10 mph.

In areas where service aisles are used and a pedestrian crossing or a hi-rail vehicle access point exists on any track subject to automatic train operations, or train speed is in excess of 10 mph, the pedestrian crossing or hi-rail access point shall be protected to prevent inadvertent use by carts. Protection shall be provided using bollards, stairs, fence, gate or other appropriate measure that will not interfere with its intended use.

Service aisles and inspection walkways shall not be located closer to the track than the safe distance from the track for workers. Nominal distance from center line of track to edge of service aisle or walkway shall be 12 feet minimum in open air. The specific distance shall be determined following selection of rolling stock and in conjunction with the operating plan.

7.7.9 End-of-Line Walkway

Wherever it is determined by the Authority that service aisles are not required along end-of-line storage tracks, a 3-foot wide lighted and paved walkway, level with the top of tie, shall be provided for accessibility to each end-of-line storage track. A single walkway between tracks is preferred.

RFP No.: 13-57 – Addendum No. 5 - 10/09/2014

7.7.10 Crosswalks

Crosswalks shall be provided along HST trackway, connecting the 2 outside walkways, at access and egress points.

Crosswalks shall be provided at track level to assure walkway continuity where safety walkways are discontinued on 1 side of the trackway and continued on the opposite side and where access is required from safety walkways and track walkways to egress points, i.e., exit stairs, cross-passages, or maintenance stairs.

Crosswalks shall be concrete paved and have a minimum width of 8 feet and a walking surface at top of rail elevation.

Elevated safety walkway shall be brought down to the top of rail level by using ramps or stairs at crosswalks. The length of the lower walkway shall be the width of the crosswalk.

Crosswalks shall not be located where the track is superelevated in excess of 5 ½ inches to ensure the maximum slope does not exceed 8.3 percent.

Crosswalks shall not be located between, on, or within special trackwork.

Handrails shall not be used at crosswalks.

Where a parked train can block a crosswalk, an alternative exit path shall be provided. There shall not be "dead-end" walkways.

7.7.11 Emergency Stairs

For trackway emergency stairs criteria refer to the *Structures* chapter, and for location refer to the *System Safety and Security* chapter.

7.7.12 Maintenance Access

Maintenance access shall be provided along CHSTS infrastructure to allow inspection and maintenance of CHSTS infrastructure and facilities. The following maintenance access requirements shall be provided:

A. <u>Aerial Structures</u>

- Fifteen-foot wide maintenance access along the entire length of aerial structure measured from both outside edges of structure.
- Fifteen-foot wide clearance around the columns and foundations.

Where continuous maintenance access cannot be provided on both sides of the structure due to existing obstacles, continuous access shall be provided at least on 1 side. Where existing obstacles do not allow providing continuous access on either side, such as river or cross roads, maintenance access shall be established beyond the obstacle as soon as practical.

RFP No.: 13-57 – Addendum No. 5 - 10/09/2014

B. Underground Structures

- Fifteen-foot (10-foot [minimum] when right-of-way is constrained) wide surface and subsurface maintenance easement, measured from the outer edges of a bored tunnel wall for ground improvements installed during construction.
- Fifteen-foot (5-foot [minimum] when right-of-way is constrained) wide surface and subsurface maintenance easement, measured from the outer edges of cut-and-cover tunnels.
- Fifteen-foot (10-foot [minimum] when right-of-way is constrained) wide maintenance access from the outside edge of the trench wall and evacuation structure of the trench section.

C. Retained Fill or Cut Structures

- Fifteen-foot (10-foot [minimum] when right-of-way is constrained) wide maintenance access, measured from the Access Restriction (AR) fence to the face of the wall (for retained fill) or to back of the wall (for retained cut), along the entire retaining walls. If retaining wall is at the right-of-way and AR fence is on top of the wall, a 10-foot wide maintenance access easement measured from the outside face of the wall shall be provided.

D. At-Grade

- Fifteen-foot wide maintenance access measured from the catch point of fill or cut slope to the right-of-way fence for at-grade sections. For cut slopes higher than 30 feet, a 20-foot maintenance access would be required.

E. Stations

- Access requirements around the CHST stations will be developed at a later time.

All maintenance access shall be drivable. Refer to *Standard and Directive Drawings* for typical sections of maintenance access along HST alignment.

7.8 Access Control Devices

For fence and gate location and additional requirements refer to the *System Safety and Security* chapter.

Access control devices are considered as ancillary structures and shall be designed to accommodate loads and load combinations defined in the *Structures* chapter.

7.8.1 Access Control

The entire Authority's right-of-way shall be protected at the property line with an anti-climb fence, wall or fence-wall, fence-traffic barrier or wall-traffic barrier combination to prevent unauthorized access by people, vehicles or animals. Refer to the *Overhead Contact System and Traction Power Return System* chapter for clearances and protection against electric shock.

RFP No.: 13-57 – Addendum No. 5 - 10/09/2014

7.8.1.1 Fences

Fencing shall be installed during construction as a means of protecting Authority properties. If temporary fencing is installed, it shall be replaced by permanent fencing prior to completion of construction.

Permanent fencing to be used is as follows:

- Access Restriction (AR) Fencing
- Access Deterring (AD) Fencing
- Station Area (SA) Fencing

Refer to the *Stations* chapter for Architectural and Station Area fencing within the station site areas, including transitions to AR and AD fencing, and pedestrian and vehicle gates on station site.

A. Access Restriction Fencing

AR fencing is permanent fencing used to deny access to the HST trackway and to protect the Authority's property.

AR fences shall meet the following minimum material and height requirements.

Unless otherwise specified, fencing shall extend from ground level to a minimum height of 8 feet, consisting of minimum 7 feet of galvanized steel woven mesh or links (commonly known as chain link or cyclone fencing) secured at the top and bottom to galvanized pipe railing, topped by 12 inches high extension arm containing three strands of barbed wire.

The barbed wire extension arm shall be placed inclined at a 45 degree angle away from Authority property. In areas where due to right-of-way, clearance, or other restriction, if the barbed wire arm cannot be placed at a 45 degree angle, it may be placed vertical.

Fence posts shall be cast into concrete footings, set into concrete retaining walls or set in rigid traffic barriers. Where a change in direction in the line of fence is 5 degrees or more, corner posts shall be installed and braced as shown on Standard and Directive Drawings.

AR fences shall be located inside the Authority's right-of-way within a distance of 1 foot from the right-of-way line.

Combinations of walls or barriers with chain link fabric and barbed wire with a total height of 8 feet measured from the highest ground surface adjacent to the wall or barrier may be used as AR fencing.

B. Access Deterring Fencing

AD fencing is permanent fencing used to deter access and/or prevent from passing through to areas that do not require a high degree of security. AD Fencing is primarily within Authority's right-of-way. AD fences may also be used in areas where the risk of trespassing is low, such as

RFP No.: 13-57 – Addendum No. 5 - 10/09/2014

storage area inside a wayside facility. AD fencing shall be 6 feet high, consisting of 6 feet of chain link fabric, secured at the top and bottom to galvanized pipe railing and no barbed wire. Fence posts shall be cast into concrete footings, set into concrete retaining walls or set in rigid traffic barriers.

C. Grounding of Fencing

Permanent fencing shall be bonded and grounded to prevent electric shock from induced voltage. Refer to the *Grounding and Bonding Requirements* chapter for additional details on the requirements for grounding of fences.

D. Vegetation Control along Fences

Vegetation along fenced areas of Authority property shall be controlled to assure that no large trees or shrubs provide access over the fence by people or animals. Fencing and trees, including branches, shall be kept apart a minimum of 5 feet. Refer to the *Overhead Contact System and Traction Power Return System* chapter for vegetation clearance to electrical lines within the Authority right-of-way. Future growth of vegetation shall be considered when planning new landscaped areas.

7.8.1.2 Walls

Walls may be used to prevent intrusion by vehicles into Authority property. When appropriate, walls may be used in combination with fences at the following locations:

- Where there is vertical separation from trackway
- Where there is close proximity between the HST trackway and an adjacent transportation facility

Refer to the *Rolling Stock and Vehicle Intrusion Protection* chapter for vehicular intrusion protection.

7.8.1.3 Traffic Barriers

Traffic barriers may be required where the Authority right-of-way abuts public and private roads and highways and at highway overpasses where there is a potential of vehicles accidentally entering the Authority right-of-way. Traffic barriers used to protect HST trackway shall comply with the requirements of the *Rolling Stock and Vehicle Intrusion Protection* chapter and Caltrans Standards:

A. Traffic Barriers Types

Traffic Barriers shall be either rigid or semi-flexible depending on the location as indicated herein. Refer to *Caltrans Standard Plans* for installation and construction details. Refer to the *Rolling Stock and Vehicle Intrusion Protection* chapter and *Standard and Directive Drawings* for barrier types and clearance requirements between Authority and Caltrans facilities.

- **Rigid Traffic Barrier –**Refer to the *Rolling Stock and Vehicle Intrusion Protection* chapter for types of rigid traffic barriers. When rigid traffic barriers are placed at Authority right-of-

RFP No.: 13-57 – Addendum No. 5 - 10/09/2014

way, the barrier shall be used in conjunction with AR fences to prevent intrusion into HST trackway from adjacent roadways.

- **Semi-flexible Traffic Barrier –** Shall be used along service roads located within Authority right-of-way except when such roads are located in close proximity to any track in which the placement of barriers may compromise the trackway clearance envelope. Semi-flexible barriers shall be placed at the outside of curve as required by safety considerations, to delineate the roadway and maintain vehicles within the trackway. Semi-flexible traffic barriers shall be Caltrans Metal Beam Guard Railing of the appropriate type for the local condition. Design and installation details for Metal Beam Guard Railing are found in *Caltrans Standard Plans*.

7.8.1.4 Fencing and Traffic Barriers in combination

AR fencing shall be located a minimum of 3 feet from the back side of a semi-flexible traffic barrier.

If 3 feet separation cannot be achieved, a rigid traffic barrier shall be used and fence height shall be increased by a height equal to the height of the barrier.

If AR or AD fencing is installed on top of a rigid barrier the combined height of fence and barrier shall not be less than 8 feet.

7.8.1.5 Gates

Gates with locking devices shall be provided along fenced areas to allow access to authorized personnel, emergency vehicles, and maintenance equipment.

Gates shall be constructed of the same material and height as adjacent fence and shall not decrease the level of security provided by the fences.

Gates shall be either swinging or sliding type. Sliding gates shall be utilized where swinging gates foul the walkway or vehicle envelope when opened. For gate details, refer to *Standard and Directive Drawings*.

Gate locations along fencing within freeway right-of-way shall require Caltrans approval.

Gate locations shall be coordinated with (i.e., placed adjacent to or near) the location of Authority wayside facilities requiring access from outside Authority right-of-way.

At aerial sections, access to the trackway shall be made from stations or emergency stairs or by mobile ladder equipment from roadways adjacent to the trackway. If no adjacent or crossing roadways exist, construction of access roads is required. Gates shall be provided at emergency stairs landing along aerial structures at intervals of 2.5 miles nominal on either side of the trackway (not on both).

For gate placement at communications, train control, and traction power facilities refer to *Standard and Directive Drawings*.

RFP No.: 13-57 – Addendum No. 5 - 10/09/2014

Gates shall be bonded and grounded to prevent electric shock from induced voltage. Refer to the *Grounding and Bonding Requirements* chapter for additional details on the requirements for grounding of gates.

A. TYPES OF GATES

- Walking Gates

Gates for personnel and equipment access (walking gates) shall have a minimum width of 4 feet.

For Traction Power Facilities, walking gates shall be 6 feet wide.

- Driving Gates

Gates for vehicular access (driving gates) shall have a minimum width of 12 feet.

Gates along right-of-way fencing may require approval by the local fire protection authority having jurisdiction. For emergency responders vehicular access minimum gate width shall be 20 feet.

Driving swinging gates shall be a pair and shall be hinged from the inside. Provision shall be made for swinging gates to swing not less than 90 degrees away from Authority facilities.

Driving gates shall be provided in conjunction with either access roads or at locations where existing roads make it practicable for emergency vehicles to get to the trackway.

Along at-grade trackway, driving gates shall be located at 2.5 mile nominal intervals on either right-of-way side. When possible, access gates shall be staggered.

Driving gates shall be provided at traction power facilities. Minimum gate width shall be 20 feet.

Trackside access driving gates shall be provided at Authority facility locations. If this cannot be provided due to site constraints, an alternative method of providing vehicular access to the trackside from the Authority facility shall be submitted to the Authority for review and concurrence.

Table 7-3: Access Control - Gates

Type of HST Trackway	Nominal Gate Spacing Interval
At-Grade, Unretained Fill, and Unretained Cut	2.5 miles
Aerial	2.5 miles
Retained Fill (Embankment) or Retained Cut	2.5 miles

RFP No.: 13-57 – Addendum No. 5 - 10/09/2014

7.8.1.6 Fence Signage

Fencing shall be provided with signs warning of hazards from operations, high voltage electrical installations, and any other relevant hazards, at any location where the public may reasonably be expected to approach the right-of-way.

Signs bearing the words "Danger", "High Voltage Lines" and "Keep Away" in letters at least 3 inches in height, shall be installed at intervals of not more than 500 feet along each fence enclosing the rights–of–way, at every gate and at each station or passenger loading platform, at a height between 5 and 6 feet from the finished ground outside Authority property. The signs may carry other information relative to the hazard present, but the three required phrases "Danger", "High Voltage Lines", and "Keep Away" shall be larger size type than the type used for additional items.

Signs bearing the message "No Trespassing" in letters of at least 3 inches in height, and including the California Penal Code section number for trespassing in smaller letter size, shall be installed along the fence at a minimum, every 500 feet, at a height between 5 and 6 feet from the finished ground outside Authority property.

Signage shall be consistent throughout the Authority system.

7.8.2 Access Control by Type of HST Trackway

Access to non-public Authority property shall be controlled by installing perimeter fences (AR) along the right-of-way with locked gates to allow access and egress of maintenance and emergency personnel.

Within the vicinity of a passenger station the right-of-way fencing shall be installed to guide the passengers to the designated platform entrances and to prevent unsafe shortcut to the platform.

7.8.2.1 At-Grade Trackway

AR fencing shall be provided continuously along each side of at-grade trackway sections, including transitions to underground or aerial sections. Fence construction shall be designed, installed and maintained in such manner as to deny access over, under or through the fencing to animals and unauthorized persons. The HST system shall have no at-grade public road crossings or at-grade crossings of other rail systems.

7.8.2.2 At-Grade Trackway within Roadway Corridor

A combination of AR fence and an appropriate rigid traffic barrier shall be constructed along the Authority right-of-way when it is at-grade, runs parallel and within Caltrans Clear Recovery Zone to a roadway, including locations where the trackway shares a common corridor in a roadway median.

The rigid traffic barrier shall be located within the Authority right-of-way at a minimum distance of 1 foot inside the Authority right-of-way.

RFP No.: 13-57 – Addendum No. 5 - 10/09/2014

Refer to the *Rolling Stock and Vehicle Intrusion Protection* chapter for traffic barrier requirements.

7.8.2.3 At-Grade Trackway Adjacent to Conventional Railroad

Protection against accidental intrusion shall be provided where a HST trackway is in close proximity to a conventional railroad corridor. Refer to the *Rolling Stock and Vehicle Intrusion Protection* chapter for additional requirements.

7.8.2.4 At-Grade Trackway through High-Risk Trespassing Areas

Special consideration shall be given to areas determined to have a high-risk of trespass such as, but not limited to, HST trackway adjacent to parks, playgrounds, schoolyards, highly populated urban areas or areas within the pathway to and from any of these places, which require a higher degree of security. The surface under the fence shall be paved to prevent undermining or fence fabric shall be embedded a minimum of 1 foot into the ground.

7.8.2.5 Trackway in Cut or Fill (Embankment) Section

AR fencing shall be used for HST trackway along embankment and cut sections. AR fences shall not be placed on the slope surfaces of the cut or embankment sections.

When the HST trackway section is in cut, AR fences shall be located at a distance from the top of slope, after slope rounding:

- Recommended 15 feet
- Minimum 10 feet

When the HST trackway section is on embankment, AR fences shall be located at a distance from the toe of slope:

- Recommended 15 feet
- Minimum 10 feet

7.8.2.6 Trackway on Aerial Structure

At abutments of aerial structures, AR fencing from adjoining sections shall be continued beyond the abutment to a point where the soffit of the structure is 10 feet or more above the finished grade. At that point, the right-of-way fences on each side of the aerial structure shall be joined under the aerial structure.

Where the ground level is less than 10 feet below the soffit of the structure, aerial structure sections shall be protected with AR fencing located 15 feet from the drip-line of the structure. Fencing is not required under an aerial structure where the right-of-way adjoins property which is already fenced in a manner consistent with these criteria.

Fencing is not required on aerial structure except at abutments. Area around the columns and foundations shall remain accessible for 15 feet outside of the foundation limits.

RFP No.: 13-57 – Addendum No. 5 - 10/09/2014

7.8.2.7 Trackway on Retained Fill

Retained fill trackways shall have at least 1 vertical wall exceeding 5 feet in height measured from finished surface along the non-trackway side of the wall.

AR fencing shall be installed on top of retaining walls along retained fill sections on the following conditions:

- When retaining walls are located at the right-of-way line along HST trackway
- The adjacent land outside Authority property is less than 10 feet below the top of the wall. Refer to *Standard and Directive Drawings* for fence details.

The combined height of the wall with traffic barrier and fence above the adjacent ground outside the Authority right-of-way shall not be less than 8 feet, including wall, chain link fabric and 1 foot of barbed wire.

Where a retaining wall is within the right-of-way line, security fencing shall not be placed on top of the wall. However, railing shall be required along the top of wall for fall protection, refer to the *Structures* chapter.

Fencing between at-grade and retained fill sections shall be continuous.

Where a retaining wall is used as support for both fencing and poles supporting lights, overhead contact system (OCS), or signs, the open space between the fence and the pole shall be less than 4 inches. Refer to the *Overhead Contact System and Traction Power Return System* chapter for OCS safety barrier requirements.

7.8.2.8 Trackway on Retained Cut

Retained cut trackways are defined as trackways having at least 1 of its vertical walls exceeding 5 feet in height measured from the top of rail.

AR fencing shall be installed on top of retaining walls or rigid traffic barriers along retained cut sections on the following conditions:

- When retaining walls are located at the right-of-way line along HST trackway and the adjacent land outside Authority property is less than 10 feet above the top of the wall. Refer to *Standard and Directive Drawings* for fence details.
- Concrete barriers located adjacent to a HST trackway on the right-of-way line.

The combined height of the wall or traffic barrier and the fence above the adjacent ground outside the Authority right-of-way shall be not less than 8 feet, including wall, chain link fabric and 1 foot of barbed wire.

Where a retaining wall is well within the right-of-way line, security fencing shall be located in accordance with other requirements and shall not be placed on top of the wall. However, railing shall be required along the top of wall for fall protection, refer to the *Structures* chapter.

RFP No.: 13-57 – Addendum No. 5 - 10/09/2014

Fencing between at-grade and retained sections shall be continuous.

Where a retaining wall is used as support for both, fencing and poles supporting lights, OCS or signs, the open space between the fence and the pole shall be less than 4 inches.

7.8.2.9 Trackway Underground (Bored, Mined, and Cut-and-Cover Tunnels)

Where at-grade sections adjoin underground sections, the right-of-way AR fencing shall extend beyond the portal by a minimum of 30 feet where possible and be continuous across the right-of-way at that point.

Where the minimum of 30 feet cannot be achieved because of physical constraints or an adjacent public way, the fencing shall extend across the right-of-way at the point of constraint.

Authority property above underground sections of HST trackway shall be protected in accordance with these criteria and the facility and/or use of the land above ground. If the use of the land above ground has not been defined and no HST facility has been constructed, perimeter AD fencing with gates shall be installed to prevent unauthorized access to the property.

RFP No.: 13-57 – Addendum No. 5 - 10/09/2014

Table 7-4: Access Control Fencing – Trackway

High-Speed Train Infrastructure	Fence Type AR	Walls / Barrier, Other
At-grade	✓	
At-grade adjacent to Roadways[(1)]	✓	✓
At-grade within Highway Corridor	✓	✓
At-grade adjacent to Conventional Railroad[(1)]	✓	✓
At-grade through High Risk Trespassing Areas	✓	
Sloped Cut or Fill (Embankment) Section	✓	
Aerial structure	✓	
Retained Fill	✓	✓
Retained Cut	✓	✓
Underground (Bored, Mined and Cut-and-Covered Tunnels)	✓	

[(1)] Use of walls and barriers for intrusion protection shall be made in conjunction with site-specific risk assessment. Refer to the *Rolling Stock and Vehicle Intrusion Protection* chapter for additional requirements.

7.8.3 Access Control by Type of Facility

This section prescribes right-of-way fencing for wayside facilities such as yards, maintenance facilities, train control, communications, and traction power facilities.

7.8.3.1 Yards and Maintenance Facilities

AR fencing with vehicular and pedestrian access gates equipped with locking devices shall be installed along the perimeter of Authority facility.

7.8.3.2 Train Control, Communications and Traction Power Facilities

Train control, traction power facilities, and communications equipment locations shall be either fenced with AR fencing or an 8 foot minimum high wall enclosure with secured gates.

Where there is public access or trespass is likely, anti-climbing protection shall be provided at buildings and other structures supporting energized parts of the OCS. In addition to anti climbing protection measures, warning signs shall be installed on the fence or the wall indicating "DANGER HIGH VOLTAGE". Access to fixed ladders, particularly at signal poles and signal gantries, and the means of access to any roof or other place which could allow non-authorized persons to approach energized parts, shall be secured or otherwise protected.

RFP No.: 13-57 – Addendum No. 5 - 10/09/2014

For fencing placement and further requirements at OCS, communications, train control and traction power facilities refer to the *Traction Power Supply System, Overhead Contact System and Traction Power Return System, Communications,* and *Automatic Train Control* chapters.

7.8.3.3 Passenger Station

Station area fence (SA), shall be installed along the right-of-way within the vicinity of a station platform to prevent unsafe shortcuts to the platform and to guide passengers to the designated station entrances. Refer to the *Stations* chapter for station area fence standards.

A. Limits of Platforms

Station area fences with locked gates shall be installed at the ends of station platforms, along the sides of platforms perpendicular to the tracks, to prevent unauthorized access to the trackway.

B. Inter-Track Fencing or Protection Screens (Walls)

Inter-track fences or protection screens (walls) shall be provided between through track and station track or between adjacent tracks at station platforms for the full length of the platforms and at least 150 feet beyond each platform end. For track spacing refer to the *Trackway Clearances* chapter and for additional criteria on inter-track fencing/protection screens refer to the *Stations* chapter.

Table 7-5: Access Control Fencing – Authority Facilities

High-Speed Train Infrastructure	Fence Type		Walls / Barrier, Other
	AR	AD	
Yard and Maintenance Facilities	✓		
Train Control and Traction Power Facilities	✓		
Passenger Stations	✓		
• Limits of Platforms			✓(1)
• Inter-Track Fencing / Protection Screens			✓(1)
Parking Facilities		✓	

(1) Station Area Fence

7.8.4 Access Control at Other Locations

7.8.4.1 End of Line and Storage Tracks

End of line tracks and end of storage tracks that extend from the station tracks, shall be protected with AR fencing located at the following:

- One (1) foot minimum distance from the Authority right-of-way line in the direction parallel to the tracks, and
- Two (2) feet minimum distance from the right-of-way side of the bumping structure in the direction perpendicular to the tracks.

RFP No.: 13-57 – Addendum No. 5 - 10/09/2014

7.8.4.2 Roadway Overhead Crossing HST Trackway

Where HST trackway is traversed by a roadway overhead crossing, the overhead crossing shall be provided with a combination of rigid traffic barrier and modified AD fencing. In addition, a protective solid barrier shall be installed on top of traffic barriers and may be secured to the modified AD fencing above the HST trackway to prevent people from reaching out and contacting the OCS wires. For protective solid barrier requirements refer to the *Overhead Contact System and Traction Power Return System* and *Grounding and Bonding Requirements* chapters. For further roadway vehicle containment requirements, refer to the *Rolling Stock and Vehicle Intrusion Protection* chapter.

Modified AD fencing at roadway overhead crossings with sidewalk shall be constructed with a curved top to prevent the throwing of objects onto HST trackway. The minimum height of the modified AD fence with the traffic barrier shall be 8 feet. Refer to *Standard and Directive Drawings*.

7.8.4.3 Streets Ending at HST Trackway

A rigid traffic barrier shall be installed at the end of dead-end streets, cul-de-sacs, or "T" intersections adjacent to at-grade segments of HST trackway. The barrier length and height shall be sufficient to intercept all possible vehicular paths from within the traveled way of the approaching street.

Case 1 – Where the longitudinal grade of the streets dead-ending at HST trackway is 2 percent maximum going down towards Authority property, the barrier shall be a minimum of 4 feet–8 inches above the street surface at the barrier.

Case 2 – Where steep grades and close proximity of the track require a substantial physical barrier against runaway vehicles, the barrier shall consist of an 18-inch thick reinforced concrete wall. The top of the barrier shall be from 4 feet–8 inches to 6 feet above the street surface at the barrier. Design drawing for these concrete walls shall be submitted to Authority for review and concurrence.

7.8.4.4 Authority Roadways

If conditions along areas of the Authority roadways require installation of traffic barriers, semi-flexible traffic barriers shall be installed, provided that the location of such barriers do not obstruct the clear pathway from walkways to emergency exits or encroach into the clearance envelope of any Authority facility.

Access roads and service roads are not required to be protected with fence.

RFP No.: 13-57 – Addendum No. 5 - 10/09/2014

7.8.4.5 Emergency Exits and Equipment Rooms in Tunnels

Emergency exits, rooms containing fixed equipments, corridors, stairwells, and other controlled areas in tunnels shall have doors and/or gates with a lock system capable of preventing unauthorized access from outside and a release mechanism that makes it possible to open them from the inside for evacuation purposes.

For additional system-wide criteria on securing exits refer to the *System Safety and Security* chapter.

7.8.4.6 Drainage Structures

Where drainage requires passage under the trackway, pipes or box culvert structures shall be used.

HST trackway over box culvert structures shall be protected with AR fencing around headwall as shown in *Standard and Directive Drawings*.

HST trackway over box culvert structures shall be evaluated for their security risk potential by preparation of a threat and vulnerability analysis. If action is required to enhance the structure to address security concerns, options considered shall not conflict with structures that have been designed as designated wildlife crossings. If culvert crossings are designated as wildlife crossing, no grates shall be installed at the entrances of the culverts, subject to approval by appropriate regulatory agency.

For culvert structure sizing refer to the *Drainage* chapter.

Open ditches alongside the trackway may require to be connected to a drainage system outside the Authority access controlled right-of-way. In such cases, open ditches crossing under AR fence shall not be allowed unless the ditch is concrete lined and the open section of the ditch is protected by steel welded grid as shown on *Standard and Directive Drawings*.

RFP No.: 13-57 – Addendum No. 5 - 10/09/2014

Table 7-6: Access Control Fencing – Other Locations

High-Speed Train Infrastructure	Fence Type		Walls / Barrier, Other
	AR	AD	
End of Line and Storage Tracks	✓		
On Roadway Overhead Crossings HST		✓(1)	✓
Streets Dead-Ending at HST Trackway • Roadway is 2% maximum going down towards Authority property	✓		✓
• Steep grades and close proximity of the track	✓		✓
Access Roads			✓
Service Roads			
Emergency Exits and Equipment Rooms			✓
Drainage Structures			✓

(1) Modified AD fence, refer to Section 7.8.4.2.

7.9 Wildlife Crossing

Authority facilities shall be designed and constructed such that wildlife movement corridors are preserved and do not create a barrier to wildlife movement in the area.

Refer to Final Environmental Impact Statement, Biological Resources and Wetlands Section for identified wildlife movement corridors that need to be preserved and mitigations measures to follow.

The mitigations measures to be incorporated as a project design feature include wildlife corridor undercrossing, wildlife fencing, and wildlife artificial dens.

7.10 Maintenance and Protection of Traffic during Construction

For the duration of the CHSTP construction, every effort shall be made to minimize the interruption of surface traffic, be that pedestrian and vehicular, adjacent to, under or over the construction site.

Access provisions for the following shall be maintained within construction zones:

- Emergency services and emergency vehicles
- Local access to businesses and residences

Temporary interruptions to business and residence access shall be coordinated and approved by the local authority having jurisdiction.

RFP No.: 13-57 – Addendum No. 5 - 10/09/2014

7.10.1 Railroad Operations

Construction activities affecting surface transportation, including freight or other rail operator, shall be planned and scheduled in cooperation with the relevant authorities/agencies. Temporary structures for the support and maintenance of surface traffic adjacent to under or over the construction site shall be designed and constructed in accordance with prevailing codes, standards and regulations and are subject to review and approval by the local authority having jurisdiction and the Authority.

During construction, interruption of, and interference with passenger and freight rail operations shall be avoided unless otherwise approved by the authority having jurisdiction. Wherever possible, the design and the sequencing of the construction activities shall allow for such uninterrupted railway operations.

RFP No.: 13-57 – Addendum No. 5 - 10/09/2014

Chapter 8

Drainage

RFP No.: 13-57 – Addendum No. 5 - 10/09/2014

Revision	Date	Description
0	02 Mar 12	Initial Release, R0
1	Jun 2013	Revision 1
2	Feb 2014	Revision 2

RFP No.: 13-57 – Addendum No. 5 - 10/09/2014

Table of Contents

8 DRAINAGE 8-1
8.1 Scope 8-1
8.2 Regulations, Codes, Standards, and Guidelines 8-1
8.3 Goals and Objectives 8-2
8.4 Hydrological Analysis 8-3
8.4.1 Time of Concentration 8-3
8.4.2 Intensity 8-3
8.4.3 Design Storm Frequency/Recurrence Interval 8-3
8.4.4 Snowmelt 8-4
8.4.5 Storm Runoff 8-4
8.4.6 Floodplain Information 8-4
8.5 Hydraulic Design 8-5
8.5.1 Basic Parameters 8-5
8.5.2 Channel Hydraulics 8-6
8.5.3 Culvert Hydraulics 8-20
8.6 Trackway and Facility Drainage Systems 8-23
8.6.1 Track Drainage Systems 8-23
8.6.2 Embankments and Cut Slopes 8-23
8.6.3 Bridges/Aerial Structures 8-23
8.6.4 Tunnels 8-26
8.6.5 Retaining Walls 8-26
8.6.6 Trenches 8-27
8.6.7 Critical HST Structures/Facilities 8-27
8.6.8 Stations and Platforms 8-27
8.6.9 Roadways 8-27
8.7 Detention/Retention of Surface Water Runoff 8-29
8.7.1 Peak Flow Reduction and Release Rate 8-29
8.7.2 Required Storage Estimate 8-29
8.7.3 Basin Sizing 8-30
8.7.4 Outlet Structures and Emergency Spillways 8-31
8.8 Stormwater Quality Management 8-31
8.9 Application of Approved Software 8-32

Tables

Table 8-1: Design Storm Frequencies 8-4
Table 8-2: Maximum Permissible Velocities for Lined/Non-Erosive Channels 8-7
Table 8-3: Hydraulic Parameters for Channel Sections 8-8
Table 8-4: Suggested Depth and Spacing of Pipe Underdrains for Various Soil Types 8-12
Table 8-5: Maximum Manhole Spacing Requirements 8-28

RFP No.: 13-57 – Addendum No. 5 - 10/09/2014

Figures

Figure 8-1: Trapezoidal Hydrograph 8-30

RFP No.: 13-57 – Addendum No. 5 - 10/09/2014

Acronyms

AREMA	American Railway Engineering and Maintenance-of-Way Association
Authority	California High-Speed Rail Authority
BMP	Best Management Practice
Caltrans	California Department of Transportation
FHWA	Federal Highway Administration
HDM	Highway Design Manual
HDS	Hydraulic Design Series
HDPE	High-Density Polyethylene
HEC	Hydraulic Engineering Center
HST	High-Speed Train
IDF	Intensity-Duration-Frequency
PVC	Polyvinyl Chloride
RCP	Reinforced Concrete Pipe
RWQCB	Regional Water Quality Control Board
SWDR	Storm Water Data Report
SWPPP	Storm Water Pollution Prevention Plan
USBR	United States Bureau of Reclamation

RFP No.: 13-57 – Addendum No. 5 - 10/09/2014

8 Drainage

8.1 Scope

This chapter provides design criteria for the hydrologic analysis and design of hydraulic facilities and provides guidelines for hydraulic facility implementation and for Best Management Practices (BMPs) for surface water quality treatment.

Unless otherwise noted, design guidance shall follow California Department of Transportation (Caltrans) Highway Design Manual (HDM) requirements for hydrologic analysis and hydraulics design. Regional criteria shall be used to determine surface water runoff data. Refer to the *General* chapter of this design manual for design life requirements for storm drain structures.

Locations where the California High-Speed Train (HST) alignment crosses existing drainage channels, drainage requirements for roadways and other structures located in or adjacent to the California High-Speed Rail Authority's (Authority's) right-of-way may be subject to regulations and additional requirements by other jurisdictions. Supplemental hydrologic and hydraulic requirements shall be considered for drainage facilities owned or operated by third-party rail operators/agencies, and property owners impacted by these improvements. Design requirements of local municipalities shall be considered for discharge within those jurisdictions. Where a drainage facility is required to connect to a third-party drainage facility, the Designer shall coordinate with the utility owner to determine if an upgrade to the existing facilities may be required.

8.2 Regulations, Codes, Standards, and Guidelines

Refer to the *General* chapter for requirements pertaining to regulations, codes, standards, and guidelines. Regulations, codes, and standards, such as but not limited to the following, shall be the one applicable.

- California Public Utility Commission (CPUC) General Orders (GOs)
  - CPUC GO 95 - Rules Governing Overhead Electric Line Construction
  - CPUC GO 128 - Rules for Underground Electric Construction
- California Department of Transportation (Caltrans)
  - Caltrans Highway Design Manual (HDM), English Version
  - Caltrans Standard Plans and Standard Specifications
  - Caltrans Bridge Design Specifications (CBDS)
  - Caltrans Storm Water Quality Handbook: Project Planning and Design Guide

RFP No.: 13-57 – Addendum No. 5 - 10/09/2014

- Federal Highway Administration (FHWA), Hydraulic Design Series (HDS)
- U.S. Army Corps of Engineers
- U.S. Bureau of Reclamation (USBR)
- U.S. Bureau of Land Management
- Federal Emergency Management Agency (FEMA)
- American Railway Engineering and Maintenance-of-Way Association (AREMA) Manual for Railway Engineering
- American Association of State Highway and Transportation Officials (AASHTO)
  - Highway Drainage Guidelines
  - Model Drainage Manual
- Applicable Local Ordinances

Applicable local building, planning, and zoning codes and laws shall be reviewed for facilities, particularly those located within multiple municipal jurisdictions, state rights-of-way, and/or unincorporated jurisdictions.

8.3 Goals and Objectives

The following goals and objectives shall be considered in development of drainage design:

- The CHSTP shall not adversely impact the existing floodplain of the area adjacent to the HST corridor.
- Ensure critical HST structures/facilities are protected against 100- and 500-year flood events. Critical HST structures/facilities, in this chapter, refers to HST structures/facilities that are critical to safe operation of HST system, refer to Section 8.6.7.
- Comply with regulatory requirements.
- Contain drainage within the Authority's right-of-way.
- Keep runoff from outside the Authority's right-of-way from entering into the Authority's right-of-way.
- To the extent that is reasonable and practical, avoid placement of third-party drainage access points from within the Authority's access controlled right-of-way.

RFP No.: 13-57 – Addendum No. 5 - 10/09/2014

8.4 Hydrological Analysis

Hydrologic design and analysis shall conform to industry standards, codes, guidelines, and utilize applicable software. The criterion for each factor involved in hydrologic analysis to obtain optimum runoff calculations are outlined in this section. For criteria not included in this section, references shall be used as follows:

- Caltrans HDM for rainfall hydrological analyses
- FHWA HDS-02 for criteria not found in Caltrans and for snowmelt analyses

8.4.1 Time of Concentration

The time of concentration (T_c) shall be used to determine approximate rainfall intensity. The time of concentration is the sum of 2 travel times, including sheet flow/overland flow and shallow concentrated flow, usually in a gutter, swale or channel.

The minimum time of concentration recommended in urban areas is 5 minutes and in rural areas is 10 minutes. For gutter, pipe and channel flow, Manning's equation shall be used, per Section 8.5.2.

The Caltrans HDM Hydrology chapter shall be referenced for detailed methodologies on T_c calculation.

8.4.2 Intensity

Intensity is defined as the time rate of rainfall depth and is commonly given in inches per hour. The time of concentration depends on an initial estimate of an intensity value found from Intensity-Duration-Frequency (IDF) curves or the National Oceanic and Atmospheric Administration (NOAA) Precipitation Frequency Data Server (PFDS) using the following link: http://hdsc.nws.noaa.gov/hdsc/pfds/pfds_map_cont.html?bkmrk=ca

IDF curves shall be obtained from local agencies or Caltrans for the most current and accurate information.

8.4.3 Design Storm Frequency/Recurrence Interval

Frequency establishes the frame of reference for how often precipitation with given characteristics is likely to occur. The design storm frequencies for the design of various storm facilities shall be as shown in Table 8-1.

RFP No.: 13-57 – Addendum No. 5 - 10/09/2014

Table 8-1: Design Storm Frequencies

Storm Facility	Rural	Urban
Drainage facilities crossing the track (e.g., culverts)	2% (50-yr) (1)	1% (100-yr) (1)
Drainage facilities not crossing the track (e.g., parking lots, access roads, station drainage facilities)	10% (10-yr) (1)	2% (50-yr) (1)
Ditches/storm drainage systems adjacent to the track	4% (25-yr) (1)	2% (50-yr) (1)
Freeways – Minor Ramps and Frontage Roads	10% (10-yr) (2)	
Conventional Highways – High volume, multilane or urban with speeds 45 mph and under		
Freeways – Through traffic lanes, branch connections, and other major ramp connections	4% (25-yr) (2)	
Conventional Highways – High volume, multilane or low volume, rural with speeds over 45 mph		
All State Highways	2% (50-yr) (2)	
Drainage systems crossing under bridge structure and on the right-of-way	2% (50-yr) (1)	1% (100-yr) (1)
Critical HST Structures/Facilities (3)	Min 0.2% (500-yr) (3)	Min 0.2% (500-yr) (3)

Notes:
(1) Based on Standard Engineering practices employed by other railroad operators within California.
(2) Caltrans HDM, Table 831.3 shall be referred to for Roadway Drainage Guidelines.
(3) For critical HST Facilities, refer to Section 8.6.7.

8.4.4 Snowmelt

For runoff calculations in areas where snowmelt may occur, refer to the FHWA HDS-02 Hydrology report.

8.4.5 Storm Runoff

Storm runoff shall be calculated in accordance with criteria and methodologies specified in the Caltrans HDM's Hydrology chapter and the applicable local procedures.

8.4.6 Floodplain Information

The proposed elevation of the track subballast (bottom) shall be a minimum of 2 feet higher than the 100-year Base Flood Elevation. Drainage facilities located within a floodplain shall be designed so that the proposed improvements will not result in the following:

RFP No.: 13-57 – Addendum No. 5 - 10/09/2014

- Increase the flood flow rate or inundation hazard to adjacent upstream or downstream property
- Raise the flood level of drainage way
- Reduce the flood storage capacity or obstruct the movement of floodwater within a drainage way

Refer to the Caltrans HDM General Aspects chapter for FEMA guidelines where encroachment on floodplains is anticipated.

8.5 Hydraulic Design

8.5.1 Basic Parameters

8.5.1.1 Discharge of Storm Drains into Local Drainage System

Discharge of stormwater from trackway sections, station sites, parking lots, and wayside facilities into local drainage system shall comply with environmental and regulatory permit requirements. Appropriate mitigation measures to prevent pollutants shall be taken as required before site drainage is discharged into local drainage system.

8.5.1.2 Debris Control

Debris may consist of trash, natural streambed material such as boulders, silts, sands, clays, sticks, tree limbs and other vegetation. Buoyant material will float during a storm event and other materials will roll or skip along channel bed. The frequency of the storm event will affect the quantity of debris that is carried along the channel; the more discharge in the channel will result in more debris carried.

Debris control shall be a significant consideration during the design of hydraulic structures such as catch basins, culverts, storm drain systems, and outlet structure from detention basins. Depending on the type of debris and location where the debris is controlled, there are several options for debris control structures such as debris racks, debris risers, debris cribs, and debris fans. The type and quantity of debris shall be determined and an appropriate debris control measure shall be implemented.

8.5.1.3 Access Control

For drainage structure access control requirements, refer to the *Civil* chapter.

8.5.1.4 Grounding and Corrosion Control

All metallic pipes and appurtenances shall be grounded and protected against corrosion. Refer to the *Grounding and Bonding Requirements* chapter and the *Corrosion Control* chapter for requirements.

RFP No.: 13-57 – Addendum No. 5 - 10/09/2014

8.5.2 Channel Hydraulics

8.5.2.1 Open Channel Hydraulics

This section presents the minimal criteria and design standards for the hydraulic evaluation and design of open channels. For criteria not included in this section, references shall be used as follows:

- AREMA's design criteria shall be followed for design of new open channels.
- Refer to Caltrans HDM for design criteria not available in AREMA, and for existing open channels.
- Local criteria shall be followed as required by the governing agency.

Transverse channels that pass through culverts shall join parallel ditches at an angle of approximately 30 degrees to minimize aggradations and deposition.

A. Open Channel Flow

The computation of uniform flow and normal depth are based on Manning's formula:

$$Q = \frac{1.49}{n} A R^{2/3} S^{1/2}$$

Where:

Q = Flow Rate (cfs)

n = Roughness Coefficient[1]

A = Flow Area (feet^2)

R = Hydraulic Radius, A/P, (feet)

P = Wetted Perimeter, (feet)

S = Slope of the Energy Grade Line, (feet/feet)

B. Maximum Permissible Velocity

Open channel flow velocities shall not erode nor cause deposition in the channel. For maximum permissible velocities of unlined channels refer to the Caltrans HDM. The maximum permissible velocities for lined/non-erosive channels are presented in Table 8-2

[1] The Caltrans HDM Physical Standards chapter shall be referred to for Manning's roughness coefficients.

RFP No.: 13-57 – Addendum No. 5 - 10/09/2014

Table 8-2: Maximum Permissible Velocities for Lined/Non-Erosive Channels

Type of Lining	Maximum Permissible Velocity (feet per second)
Unreinforced vegetation	5.0
Loose riprap	10.0
Grouted riprap	15.0
Gabions	15.0
Soil-Cement	15.0
Concrete	35.0

Source: Clark County Regional Flood Control District, Hydrological Criteria and Drainage Design Manual, August 1999.

C. Freeboard

Freeboard is the vertical distance between the design water surface elevation and the bottom of subballast or bottom of a bridge girder/soffit. The minimum freeboard required for track side ditches shall prevent saturation and infiltration of stormwater into the subballast and ballast sections of the track. The minimum recommended water depth in any channel section shall be 2 feet below the bottom of subballast or bottom of a bridge girder/soffit.

For superelevation requirement on curved open channel alignment for water surface elevation, refer to the Caltrans HDM.

D. Grade Control

If the ditch grade is steeper than the grade that results in maximum permissible velocities, drop structures shall be considered to maintain design velocities, and prevent erosion and scour to the channel bed and embankments. To mitigate sediment aggradation and degradation, a drop structure may be installed across a channel to create a vertical drop or a short sloping drop. Drop structures may be built with gabions, sheet piling, riprap, or concrete walls with footings.

E. Channel Section

Selection of a channel cross section may involve changing/improving the existing natural waterway (channel) or designing a new channel section. Where feasible, the channel section is preferred to have a flat bottom.

Changing a natural channel – Existing hydraulic conditions of a natural channel shall be assessed to confirm channel stability and evaluate the impact of proposed improvements. Natural waterways shall have adequate capacity to pass the flows from a design storm event. The stream mechanics shall be studied to analyze the need for erosion control structures.

Design of new channel section – The first estimation of a channel cross section is based on normal depth plus freeboard. The shape of the channel shall consider terrain, flow velocity, available right-of-way for the corridor, and quantity of flow to be conveyed. Channels shall be sized for the anticipated design runoff and to allow the subballast to drain. Open channels

RFP No.: 13-57 – Addendum No. 5 - 10/09/2014

along the toes of trackway embankments shall be designed with sufficient depth to carry the peak flow with design water surface elevation below the bottom of subballast.

Hydraulic parameters of basic channel sections are provided in Table 8-3. For trackside ditch details, refer to Standard and Directive Drawings.

Table 8-3: Hydraulic Parameters for Channel Sections

Channel Section	Area (A)	Wetted Perimeter (P)	Hydraulic Radius (R)
Triangular V-ditch	zy^2	$2y\sqrt{1+z^2}$	$\frac{zy}{2\sqrt{1+z^2}}$
Trapezoidal	$(b+zy)y$	$b+2y\sqrt{1+z^2}$	$\frac{(b+zy)\,y}{b+2y\sqrt{1+z^2}}$
Rectangular	by	$b+2y$	$\frac{(by)}{(b+2y)}$

Notes:
b = base of rectangle or base of trapezoidal
z = side slope of trapezoid or V-ditch
y = depth of flow in channel

F. Channel Lining

Channel lining is the key factor that determines the roughness coefficient of a channel. The most commonly used channel materials are the following:

Grass lined channel (vegetative lined) – Grass linings provide protection to the channel from erosion. Due to the frequent maintenance involved, grass lined channels are not recommended within the Authority's right-of-way. They may be used as a best management practice for stormwater quality control where pollution prevention devices are required. Grass lined channels shall not be designed with side slopes steeper than 3:1 (H:V).

Riprap lined channel – Riprap lining is suitable for a short but steep channel reach. The nature of high friction of rocks contributes to the effectiveness of energy dissipation. Riprap channels may be considered where right-of-way is constrained and/or erosion occurs.

The roughness coefficient, n, of a riprap channel is correlated to the intermediate riprap rock size, D_{50}, in feet.

$$n = 0.0395\, D_{50}^{1/6}$$

Where:

n = Roughness, (non-dimensional)

The criteria for sizing of D_{50} and thickness of riprap lining shall be as follows:

RFP No.: 13-57 – Addendum No. 5 - 10/09/2014

- D_{50} (maximum) = 24 inches
- Thickness of riprap lining = $2*D_{50}$
- Thickness of riprap lining shall be 50 percent more for water deeper than 3 feet.

Concrete lined channel – Concrete lining shall be designed to withstand various forces due to high gradient. Criteria for design of concrete lined channels include the following:

- Thickness of concrete lining = 6 inches for V < 30 feet per second
- Thickness of concrete lining = 7 inches for V > 30 feet per second
- Channel section shall be adjusted for superelevation changes in water surface.
- Side slopes shall be a maximum of 2:1 (H:V), or a structurally reinforced wall if steeper.
- A concrete cutoff wall shall be provided at both the upstream and downstream termini.

Composite channel – Composite channels shall be considered where the open channel shall have the hydraulic capacity to handle a wide spectrum of storm events. Due to the maintenance level involved, composite channels are not permitted within the Authority's right-of-way but may be designed outside the Authority's right-of-way where floodplain mitigation and/or pollution prevention/mitigation measures are required. The channel cross section shall be designed to have 2 sections: the lower section or the main channel, usually shallow, narrow and has a hard bottom, with a side slope ranging from 0.5:1 (H:V), to 2:1 (H:V) and an overbank section usually wide, flat and grass lined, with mild slopes of 10:1 (H:V).

Composite channels may be designed for more specific purposes such as low flow channels, trickle channels and wetland channels.

8.5.2.2 Overside Drains

Overside drains are used to prevent erosion of embankments and other steep-sloped surfaces by collecting surface runoff and conveying it to a stable or less erosive drainage facility. Water conveyance at cut slopes or fill slopes are generally erosive and are more likely to need an overside drain. The spacing of overside drains shall consider the quantity of flow and capacity limitation of the gutter or ditch and the ground configuration.

For cut slopes, the angle of the slope shall be considered for overside drain slopes. The overside drain shall be sized to convey a larger storm, so that the drain is not washed out following a major storm event. Rock riprap shall be considered to minimize the velocity, but may need a wire mesh to prevent rock slippage.

Fill slopes may require the use of overside drains. For roadways, curb openings will generally allow flow to discharge down an embankment into an open channel. Ditch openings or small spillways may be used to alleviate water from trackside drainage ditches. Riprap material and an aesthetic design shall be considered.

RFP No.: 13-57 – Addendum No. 5 - 10/09/2014

Water from overside drains shall not be diverted to watersheds that originally did not contain the water, or negatively affect downstream properties.

Overside drains may be designed as pipe downdrains, flume downdrains and spillways as follows:

- **Pipe downdrains** – Usually made of plastic or metal material, pipe downdrains are recommended for slopes of 4:1 (H:V) or steeper and a minimum diameter of 8 inches. When overside drains are designed in areas where sediment debris is likely and the drain is expected to be longer than 50 feet, a larger pipe size shall be considered to minimize clogging in the pipe. Overside drain pipes shall be buried along the corridor, or designed to blend with the existing natural landscape.

- **Flume downdrains** – Generally rectangular in shape, flume downdrains are open channel chutes that can discharge water at steeper grades, 2:1 (H:V) or steeper. The flume invert shall be below surface grade so that the flume is even with the surface slope. Sharp bends in the flume are not permitted.

- **Spillways** – Asphalt concrete is typically used to create a spillway on slopes flatter than 4:1 (H:V). Spillways are most commonly V-shaped and shall be placed on compacted soil to prevent further erosion. Sharp turns are not permitted to prevent splash over of discharge.

Grate inlets may be used in cases where a depression in not feasible. Outlet velocities shall be mitigated by use of energy dissipators.

8.5.2.3 Underdrain System

Underdrains shall be located in areas where it is anticipated that groundwater may interfere with the stability of tracks, roadbeds and side slopes. The underdrain system helps to draw the water table down, preventing softening of sub grade soils, sloughing, or instability of slopes. The utilization of underdrain pipes shall consider subsurface conditions and geotechnical studies focusing on infiltration and percolation recommendation. Underdrain pipes shall be bedded in clean, granular or crushed aggregate material enclosed in an envelope of non-woven geotextile fabric. For criteria not included in this section, reference shall be made to Caltrans HDM design criteria for underdrain systems within roadways or highways.

A. Pipe Size

Underdrain pipe shall be a minimum of 6 inches in diameter for segment length less than 500 feet and a minimum of 8 inches for segment lengths over 500 feet. A minimum 6-inch PVC pipe shall be used to carry the water from underdrain system to an onsite drainage system or to the municipal stormwater system.

B. Location

Underdrains shall be used in the following locations:

RFP No.: 13-57 – Addendum No. 5 - 10/09/2014

- Under ballast in ballasted trackway which does not naturally drain towards the outside of the trackway, to intercept ground water and trackbed surface drainage infiltration through the ballast
- Along the toe of a cut slope to intercept seepage
- Along the toe of a fill on the side from which groundwater emanates
- Across the track or roadway at the downhill end of a cut
- Along the periphery of any paved area under which groundwater is likely to collect
- In retained cuts and on retained embankments
- Under the track slab at station platforms
- Between tracks at locations of outside station platforms and or where several sets of tracks are adjacent
- At low points in the profile, and 100 feet each side of a low point

C. Pipe Material

Underdrain pipes shall be perforated type and installed with perforations pointing down towards the bottom of the trench. Underdrain pipe shall be made of porous concrete, steel, aluminum, corrugated metal, rigid plastic, or polyethylene. For track drainage at stations and at-grade sections, perforated PVC or high-density polyethylene of schedule 80 shall be used.

D. Access Holes/Cleanouts and Risers

Access holes/cleanouts for underdrains shall have convenient access for maintenance crews and equipment. Cleanouts for underdrain systems shall be spaced at a maximum of 300 feet. Pipe materials for cleanouts to be used within trackway shall be plastic with metal risers. Risers shall be provided at beginning of underdrain runs and at a maximum of 300-foot intervals. For track drain/underdrain cleanout and riser details, refer to Standard and Directive Drawings.

E. Cover

Underdrain pipes for track drainage system shall have a minimum cover of 36 inches from the top of finished grade.

F. Depth and Spacing

Underdrain depth and spacing shall consider the permeability of the soil, the elevation of the water table and the amount of drawdown and time needed to ensure stability. Depth and spacing of underdrains shall be as follows:

RFP No.: 13-57 – Addendum No. 5 - 10/09/2014

Table 8-4: Suggested Depth and Spacing of Pipe Underdrains for Various Soil Types

Soil Class	Soil Composition			Drain Spacing (feet)			
	Percentage Sand	Percentage Silt	Percentage Clay	3 feet Deep	4 feet Deep	5 feet Deep	6 feet Deep
Clean Sand	80-100	0-20	0-20	110-150	150-200	-	-
Sandy Loam	50-80	0-50	0-20	50-100	100-150	-	-
Loam	30-50	30-50	0-20	30-60	40-80	50-100	60-120
Clay Loam	20-50	20-50	20-30	20-40	25-50	30-60	40-80
Sandy Clay	50-70	0-20	30-50	15-30	20-40	25-50	30-60
Silty Clay (1)	0-20	50-70	30-50	10-25	15-30	20-40	25-50
Clay (1)	0-50	0-50	30-100	15 (max)	20 (max)	25 (max)	40 (max)

Source: Caltrans HDM, Table 842.4.

Notes:

(1) Drainage blankets or stabilization trenches shall be considered.

G. Slope

Underdrain grades shall be not less than 0.5 percent. If 0.5 percent is not feasible, a slope that would provide a minimum velocity of 2 feet per second shall be provided in the full pipe condition.

H. Separation of Underdrain Systems

Design of underdrain systems shall consider separation of drainage flows:

- Pipes carrying surface water shall not discharge into underdrains. Surface water shall also be prevented from seeping into underdrains other than those provided to collect trackbed surface drainage.
- Where underdrains are located under trackbeds or paved areas, other than sidewalks, the filter material and filter fabric shall extend up to the top of prepared subgrade.
- Where underdrains other than those provided to collect trackbed surface drainage are located under unpaved areas or sidewalks, the filter material shall extend up to 6 inches below finished grade and the filter material shall be covered with impervious backfill material.

8.5.2.4 Energy Dissipators

Where the anticipated outlet velocity for a waterway exceeds the maximum permissible velocity for the bed material of the receiving channel, an acceptable means of energy dissipation shall be used to reduce the velocity to safe limits. Commonly used energy dissipators include natural scour holes, drop structures, internal dissipators, external dissipators, and stilling basins. These facilities decrease the chance of a hydraulic jump as well as erosion/scour.

RFP No.: 13-57 – Addendum No. 5 - 10/09/2014

This section presents the minimal criteria and design standards for the hydraulic evaluation and design of energy dissipators. For criteria not included in this section, the following references shall be used:

- Refer to Caltrans HDM for design criteria of energy dissipators on highways and freeways.
- Local criteria shall be followed as required by the governing agency.

To permit debris to be carried with the flow, dissipators employing obstructions shall be avoided unless it can be demonstrated that such obstructions will not collect debris.

A. Natural Scour Holes

This option consists of providing an area in which flows through the culvert will be allowed to form a natural scour hole. Scour holes shall be lined over an area sufficient to cover the potential scour hole with the class of riprap appropriate for the culvert exit velocity.

The following shall be considered in the design of natural scour holes:

- Undermining of the culvert outlet will not occur or it is impracticable to be checked by a cutoff wall.
- The expected scour hole will not cause costly property damage.
- Right-of-way or drainage easements at the site are sufficient to encompass the entire scour hole which may often be quite large.
- Environmental concerns due to sedimentation will not be a factor.
- There are no aesthetic concerns or other nuisance effects, such as insect breeding.

B. Drop Structures

Inclined or sloping drop structures – Where the difference in elevation from the upper channel bottom to the lower channel bottom is 10 feet or lower, these drop structures shall be used. The top of the crest wall shall be placed at a height above the upstream channel bottom. A downstream apron shall be provided to transition from the drop structure to the downstream channel.

Vertical drop structures – A vertical drop structure is designed to force the hydraulic jump to occur within a stilling basin next to a rectangular weir. When the flow line of the channel is too steep for the design condition, erosion and scour may occur to the channel bottom or the toe of the embankment. To mitigate sediment aggradation and degradation, a drop structure shall be considered. The drop structure shall have sufficient length and water cushions to prevent scouring of the downstream channel bed due to a nappe or hydraulic jump.

Material – The material used to construct the drop structure depends on the availability of materials, the height of drop required, and the width of the channel. Rock riprap and timber pile construction have been successful on channels having small drops and widths less than

RFP No.: 13-57 – Addendum No. 5 - 10/09/2014

100 feet. Sheet piles, gabions, and concrete structures are generally used for larger drops on channels with widths ranging up to 300 feet.

C. Internal Dissipators

Containing the hydraulic jump within the culvert is a form of internal energy dissipation. Internal dissipators shall be used where the scour hole at the culvert outlet is unacceptable, the right-of way is limited, debris is not a problem and moderate velocity reduction is needed. The 3 types of internal dissipators are tumbling flow, increased resistance, and broken back culverts.

Tumbling flow (roughness elements) – Tumbling flow may be applicable where culvert slopes are between 10 percent and 15 percent. Tumbling flow in culverts shall be the following:

- Use 5 rows of uniformly sized roughness elements in box culverts or open chutes
- Spacing (L) between the roughness element rows is set by choosing a ratio of L/h to be between 8.5 and 10, where h is the height of the element.

Increased resistance – Increasing resistance may cause a culvert to change from partial flow to full flow in the roughened zone. Velocity reduction is accomplished by increasing the wetted surfaces as well as by increasing drag and turbulence by the use of roughness elements. Increased resistance shall be used where a culvert is flowing partially full with inlet control and the requirement for outlet velocities is between critical and normal. The following criteria shall be considered for increased resistance design on culverts:

- Where slopes of culverts are less than 4 percent
- Five rows of roughness elements may be used.
- Where the height of element is 5 percent to 10 percent of the diameter

Broken-back culverts – Substituting a "broken-slope" flow line for a steep, continuous slope in a culvert may be used for controlling outlet velocity. The steep slope of the culvert is replaced by breaking the slope into a steeper portion near the inlet followed by a horizontal runout section. Broken-back culverts, at minimum, shall have the following:

- There shall be sufficient tailwater and sufficient friction and length in the runout section of the culvert
- Steep sections for which slope shall be less than or equal to 1:1.4 (H:V)
- Hydraulic jump may be completed within the culvert barrel

In situations where the runout section is too short and/or there is insufficient tailwater for a jump to be completed (or initiated) within the barrel, an outlet weir or a drop of the outlet followed by an outlet weir shall be designed. Sills are effective in forcing the hydraulic jump in broken-back culverts and in spreading the water back to the natural stream width.

RFP No.: 13-57 – Addendum No. 5 - 10/09/2014

D. External Dissipators

External dissipators shall be designed where the outlet scour hole is not acceptable, a moderate amount of debris is present, and the culvert outlet velocity is moderate, Fr < 3. Various types of external dissipators are discussed in the following sections.

Impact basin U.S. Bureau of Reclamation Type VI – The USBR Type VI basin was developed by the USBR and is contained in a relatively small box-like structure, with a vertical baffle. An opening is provided between the bottom of the baffle and the floor of the box.

The use of impact basin USBR Type VI is not recommended where debris or ice buildup may cause substantial clogging. The design of impact basin USBR Type VI shall achieve the guidelines presented below:

- Valid for discharges up to 400 cubic feet per second and velocities as high as 50 feet per second.
- In situations where the culvert entering the basin has a slope greater than 27 percent, the basin shall be constructed on a horizontal grade.
- The culvert shall provide a horizontal section at least 4 culvert widths in length immediately upstream of the dissipator.
- The end of the basin shall be provided with a low sill that, where feasible, shall be set at the same elevation as the downstream channel.
- Where needed to retain the roadway embankment, the end of the basin may be provided with an alternate end sill and 45 degree wingwalls.
- Where the velocities of flows exiting the basin exceed 5 feet per second, the channel downstream of the basin shall be provided with a riprap apron, per the guidelines presented in the section on 'Riprap Aprons'.
- A moderate depth of tailwater will improve its performance. However, the tailwater depth shall not be above half of the height of the baffle.

Hook type impact basin energy dissipator – The hook energy dissipator is a type of impact basin that abates culvert outflow velocities by means of 3 hook-shaped blocks and an end sill in a uniform trapezoidal channel or a warped wingwall basin. The minimum criteria for hook type basins are presented below:

- Hook type Basin with Uniform Trapezoidal Channel
  - The side slopes of the basin shall be between 1.5:1 (H:V) and 2:1 (H:V), and the bottom width of the basin shall be 1 to 2 times the effective opening width of the culvert.
  - Where scour may occur, a riprap apron shall be provided downstream of the basin, per the guidelines presented in the section on 'Riprap Aprons'.
  - A cutoff wall shall be provided at the end of the basin.

RFP No.: 13-57 – Addendum No. 5 - 10/09/2014

- These basins may be used where the Froude number of the culvert outflow is between 1.8 and 3.0.

- Hook type basin with warped wingwalls
  - Wingwalls warped from vertical at the culvert outlet to side slopes of 1.5:1 (H:V) at the end sill are recommended.
  - The recommended ratio of hook width/culvert width is 0.16.
  - The spacing between hooks shall be within the range of 1.5 to 2.5 times the hook width.
  - The height of wingwalls shall be at least twice the flow depth at the culvert exit.
  - A flare angle of 5.7 degrees per side is the optimum value for Fr > 2.45.
  - Where scour may occur, a riprap apron shall be provided downstream of the basin, per the guidelines presented in the section on 'Riprap Aprons'.

Riprap aprons – Riprap aprons for culverts shall be designed in accordance with outlet protection criteria mentioned in Section 8.5.3.4 of this chapter.

Riprap aprons for energy dissipators shall be designed per the equation:

$$D_{50} = \frac{0.692}{(S-1)}\left(\frac{V^2}{2g}\right)$$

Where:

D_{50} = median rock size (feet)

S = rock specific gravity (pound per cubic foot)

V= velocity at the end of energy dissipator (feet per second)

E. Stilling Basins

Stilling basins shall be used where the outlet scour hole is not acceptable, debris is present, and the culvert outlet velocity (V_o) is high, Fr > 3.

Riprap basin – The riprap basin shall be considered where the standard riprap apron or other energy dissipators are inadequate. A riprap basin is a depressed area of riprap placed at the outlet of a high velocity culvert, storm drain outlet, or open channel. Recommended minimum criteria for riprap basin are as follows:

- The basin shall be pre-shaped and lined with riprap that is at least 2 x D_{50} thick.
- The ratio of depth of scour (ds) to rock size (D_{50}) shall be greater than 2.
- The length of the energy dissipating pool shall be 10 x (ds), and the length of the apron 5 x (ds).

RFP No.: 13-57 – Addendum No. 5 - 10/09/2014

- A riprap cutoff wall or sloping apron shall be constructed if downstream channel degradation is anticipated.

Saint Anthony Falls stilling basin – The Saint Anthony Falls stilling basin uses a forced hydraulic jump to dissipate energy. The design consists of a sloping chute with chute blocks at its base, followed by blocks on the floor of the basin. The basin floor also has a sill located at the downstream end. The basin sidewalls may be parallel for a rectangular stilling basin or may diverge, beginning at the downstream toe of the chute to create a flared stilling basin. A cut-off wall and wingwalls shall be provided at the end of the stilling basin. Minimum design criteria for a Saint Anthony Falls stilling basin is provided below:

- Recommended where Fr = 1.7 to 17
- Requires a sufficient tailwater for efficient operation
- Sidewall flare shall not be greater than 0.5:1, 0.33:1, or flatter
- Height of the baffles is set equal to the entering flow depth
- Wingwalls shall be equal in height and length to the stilling basin sidewalls. Top of the wingwall shall have a 1:1 (H:V) slope.

8.5.2.5 Siphons

Inverted siphons (sometimes called sag culverts or sag lines), although not desirable, may be used to convey water by gravity under roads, railroads, other structures, various types of drainage channels and depressions. An inverted siphon structure shall operate without excess head when flowing at design capacity and shall not be used for drainage or irrigation where freezing may block the siphon's waterway.

Inverted siphons shall be used as follows:

- To carry flow under obstructions such as sanitary sewers, water mains, or any other structure or utility that may be in the path of the storm drain line
- Where avoidance or adjustment of the utility is not practical

This section presents the minimal criteria and design standards for the hydraulic evaluation and design of inverted siphons. For criteria not included in this section, the following reference(s) shall be used:

- Caltrans HDM design criteria shall be followed for design of siphons or sag culverts within roadways or highways.

A. Pipe Material and Size

Several pipe materials may be used for siphon construction:

- Welded smooth steel pipe with internal ceramic coating

RFP No.: 13-57 – Addendum No. 5 - 10/09/2014

- Precast reinforced concrete pressure pipe
- Reinforced plastic mortar pressure pipe

The conduit size through the inverted siphon used as a storm drain system shall be the same size as either the approaching or exiting conduit. In no case shall the conduit size be smaller than the smallest of the approaching or exiting conduit.

B. Transitions, Head Losses, Cover and Slope

Transitions are defined as the inlet and outlet portion of an inverted siphon and shall be used to reduce head losses and prevent channel erosion in unlined channels. Siphon transitions shall be located outside the Authority's right-of-way. Concrete inlet and outlet transitions shall be used for the following:

- Siphons crossing tracks and paved roadways
- 36-inch diameter and larger siphons crossing narrow (< 30 feet), unpaved, off-system roads
- Siphons in unlined channels with water velocities in excess of 3.5 feet per second in the siphon

Because an inverted siphon includes slopes of zero and adverse values, head losses through the structure due to friction, bends, junctions, and transitions shall be accounted. Sound engineering judgment shall be used to determine the maximum limits of head losses and if determined unacceptable, an alternative for the siphon design shall be considered. The total computed head loss shall be increased by 10 percent as a safety factor to ensure the siphon is not causing unexpected backwater.

The siphon profiles shall satisfy requirements of cover, siphon slopes, bend angles, and submergence of inlet and outlet.

- At siphons crossing tracks and roadways or highways, the minimum cover shall be based on the structural requirements of the siphon material.
- At siphons crossing under natural drainage channels, a minimum of 3 feet of compacted earth cover shall be provided.
- At siphons crossing under an earth channel, a minimum of 3 feet of compacted earth cover shall be provided.
- At siphons crossing under a lined channel, a minimum of 3 feet of compacted earth cover shall be provided between the bottom of the channel lining and the top of the siphon.

Siphon slopes shall not be steeper than 2:1 (H:V) and shall not be flatter than a slope of 0.005 feet/feet.

RFP No.: 13-57 – Addendum No. 5 - 10/09/2014

C. Velocity

The following velocity criteria are to be used in determining the length of the siphon:

- 3.5 feet per second or less for a short siphon not located under a trackway or roadway with only earth transitions provided at entrance and exit
- 2.5 feet per second or less for a short siphon located under tracks or roadways with either a concrete transition or control structure provided at both inlet and outlet
- 10 feet per second or less for a long (> 200-foot) siphon with either a concrete transition or control structure provided at the inlet and a concrete transition provided at the outlet

D. Collars and Blowoff Structures

Collars are placed at intervals along the siphon to reduce the velocity of any water moving along the outside of the siphon or through the surrounding earth, thereby preventing removal of soil particles (piping) at the point of emergence. Siphon collars shall not be used unless piping computations or observations of burrowing animals indicate they are needed.

Blowoff structures are provided at or near the low point of inverted siphons to permit draining of the siphon for inspection and maintenance or shutdown. Siphons greater than 18 inches in diameter shall be equipped with a blowoff structure. An access hole or similar access shall be included with a blowoff on long siphons 36 inches and larger in diameter to provide an access point for inspection and maintenance. To facilitate removal of any accumulated sediments and to expedite the draining process, an 8-inch minimum gate valve shall be used. The drain pipe shall outfall where drain water will not cause any damage.

E. Freeboard

Upstream channel freeboard is commonly provided to accommodate intercepted storm runoff, improper operation or drift blockage. Freeboard criteria for siphons are as follows:

- The channel bank freeboard upstream from siphons shall be increased 50 percent or 1.0 foot maximum to prevent washouts at these locations.
- The increased freeboard shall extend upstream a distance from the structure such that damage caused by overtopping the channel banks would be minimal.
- If the freeboard extends upstream from the transition inlet, a minimum distance as determined by dividing the freeboard height by the channel slope shall be used. And, for freeboard downstream from the outlet transition, a minimum distance of 50 feet or to the Authority's right-of-way, whichever is less, shall be used.

F. Wasteways

Wasteways are often placed upstream from a siphon transition to divert the channel flow in case of an emergency. A wasteway, either separate or integral with the inlet transition, shall be provided where significant damage would occur due to escaping channel waters. Escaping

RFP No.: 13-57 – Addendum No. 5 - 10/09/2014

waters shall be conveyed to a point and released in a manner to avoid trackway, roadway or property damage. Wasteways are not permitted within the Authority's right-of-way.

G. Safety Devices

Safety measures (e.g., fences, grates) shall be provided near siphons to protect persons and animals from injury and loss of life. A hazard can occur both when the siphon is operational or dry. Inlet and outlet transitions shall be hydraulically efficient and have removable grates to minimize the hazard associated with human or animal ingress or debris blockage.

8.5.2.6 Pump Stations

The use of pump stations at sag or sump points shall be avoided, when practical. Long-term operation and maintenance costs shall be identified and considered prior to implementation of pumps. The use of a gravity system shall be fully evaluated through the use of long pipelines or adjustments to the grade or track profiles, before pumps can be considered for the project. Where a gravity system cannot be provided and pump stations are unavoidable, pump station design within the corridor shall conform to the following:

- FHWA, Hydraulic Engineering Center (HEC)-24 on Highway Stormwater Pump Station Design
- *Mechanical, Supervisory Control and Data Acquisition Subsystems,* and *Facility Power and Lighting Systems* chapters of this Design Criteria

For pump stations installed for the project, but owned, operated, and maintained by local agencies or a third party, the criteria to use shall be in accordance with the local governing agency.

Pump stations shall be designed to accommodate the inflow from a storm event according to Section 8.4.3. All possible flow shall bypass or pass-through downstream of the pump station, to reduce pumping requirements. Hydrological analyses of the watersheds that may discharge to the pump stations shall be carefully evaluated to avoid potential off-site drainage diversions from adjacent watersheds. The pump station design shall also address future build-out of the tributary watershed to verify that the pump station can handle increases in flow.

Pump stations shall be designed to accommodate space for equipment cabinets and conduit and cabling to provide for SCADA control.

8.5.3 Culvert Hydraulics

Existing drainage facilities within the corridor shall not be negatively impacted due to the proposed design. Where a transverse undercrossing is required to convey surface runoff, flood waters, and/or existing streams across the Authority's right-of-way, the crossing shall be provided within a culvert. When runoff is increased, existing culverts shall be upsized to allow for increase in flow.

RFP No.: 13-57 – Addendum No. 5 - 10/09/2014

The following sections outline minimal culvert criteria. For criteria not addressed in this section, the following references shall be used:

- AREMA shall be followed for design of culverts along the corridor.
- Caltrans HDM shall be followed for design of culverts along roadways and highways impacted by the improvements.
- Local criteria shall be followed if AREMA and Caltrans criteria do not specify.

8.5.3.1 Design Elements

Numerous cross sectional shapes are available to be used as culverts. The shape selection shall be based on the cost of construction, the limitation on the upstream water surface elevation, track and roadway embankment, available cover, and hydraulic performance.

The following culvert criteria shall be applied:

- Minimum culvert diameter/rise for trunk drains and culverts crossing under the track shall be 36 inches.
- Minimum culvert diameter/rise for lateral drains shall be 18 inches.
- Culverts and drains under platforms and station areas shall be a minimum of 18 inches.
- Culverts crossing under trackway shall not be placed within the limits of prepared subgrade unless the backfill material for the culvert and its compaction meet the requirements of prepared subgrade, refer to *Geotechnical* chapter for limits of prepared subgrade, material and compaction requirements. Culverts crossing under trackway shall be a minimum of 6 feet below top of rail and 3 feet below the flow line of ditch along the trackway.
- Culverts, within 45 feet of track centerline, shall have a minimum cover of 4 feet; culverts elsewhere shall have a minimum cover of 3 feet.
- In locations where the above criteria are not practical, reduced clearance may be provided with approval of the governing agency.

The selection of a culvert material shall consider structural strength, hydraulic performance and roughness, durability, corrosion and abrasion resistance. Common culvert materials are concrete, corrugated aluminum and corrugated steel. Culverts and storm drains passing beneath tracks or maintenance roadways shall be reinforced concrete pipe (RCP). Culverts and drains under platforms or in station areas that are not under tracks shall be RCP, polyvinyl chloride (PVC), high-density polyethylene (HDPE), or corrugated steel.

8.5.3.2 Location, Skew, and Slope

Culverts shall be placed to allow for cross-passage of surface runoff, flood waters, and where existing streams may exist. This may reduce embankment erosion, minimize debris buildup and, if placed often enough, limit carryover of drainage from one watershed to another.

RFP No.: 13-57 – Addendum No. 5 - 10/09/2014

Culverts shall be in alignment and on the same gradient with existing streambeds. Curvatures in the alignment of the culvert and angle points shall be avoided.

The slope of the culvert shall be the same gradient of the existing streambed unless the topography is generally flat, in which case the invert of the inlet and outlet structures shall be designed to avoid sedimentation in the culvert. A minimum self cleaning velocity of 2.5 feet per second shall be used for culvert design.

8.5.3.3 Inlet Structure

For inlet control, a maximum allowable headwater of 1.5 times the culvert diameter/rise shall be used. For the 100-year storm event, a minimum freeboard between the water surface elevation and the subballast shall be 2 feet.

Upstream properties shall be protected from ponding and backwater effects from an undersized culvert. Ponding at the inlet structure shall be prevented. A larger culvert size shall be implemented if ponding and discharge backup are anticipated at the culvert entrance. Overtopping of the tracks is not permitted.

Sound engineering judgment shall be applied to inlet structure design.

A. Headwalls

Headwalls shall be used in locations where right-of-way is constrained, in areas where vegetation growth on slopes is limited, to improve the culverts appearance and increase the hydraulic efficiency. The headwall shall be designed to have adequate strength and proportion to prevent sliding or overturning from excessive soil pressures and to prevent settlement.

B. Wingwalls

Wingwalls shall be considered to prevent erosion and scour and provide soil stability around the proposed culvert. Perpendicular, oblique, or parallel wingwalls, or a combination thereof, shall be used, depending on the physical and hydraulic conditions involved. Wingwalls shall be carefully designed not to alter the historical flow patterns of the existing stream and prevent turbulence during peak storm events. An entrance apron and cutoff wall shall also be considered to prevent erosion and scour and increase hydraulic efficiency at the inlet.

C. Flared End Sections

Flared end sections improve hydraulic performance of the culvert by allowing a smooth transition between the natural channel and culvert and are aesthetically appealing. Due to these reasons, flared end sections are preferred to headwalls and wingwalls within the corridor.

8.5.3.4 Outlet Structure

Due to the unnatural constriction and material of culverts, the outlet velocity is generally higher than natural stream velocities. Energy dissipators or outlet embankment protection, such as slope paving, riprap, headwalls and wingwalls, end sections, cutoff walls and toe walls, shall be provided at culverts along the corridor to minimize downstream erosion and reduce drainage

RFP No.: 13-57 – Addendum No. 5 - 10/09/2014

velocities. Natural flow patterns of the existing stream shall be restored downstream of the culvert, with special consideration of the channel transition for the 100-year flood.

Refer to Section 8.5.2.4 for design of energy dissipators.

8.6 Trackway and Facility Drainage Systems

8.6.1 Track Drainage Systems

Standing water along rail tracks may shunt the signal circuits causing signal failures. Hence, standing water along rail tracks is not permitted and shall drain away from the tracks. Track drainage shall be provided to drain stormwater from tracks including cable troughs and right-of-way. Drainage criteria for cable troughs in at-grade sections are provided in the *Civil* chapter. A minimum 4-foot flat bottom ditch shall be used for drainage along the trackway toe of embankments or bottom of cut sections. Refer to Standard and Directive Drawings. Where a minimum 4-foot flat bottom ditch cannot be accommodated due to constraints, a V-ditch may be used. Underdrain track drainage pipe systems shall be used where right-of-way constraints make the standard flat bottom ditch or V-ditch unfeasible. Track drainage systems shall be used as a longitudinal drainage system to capture the onsite runoff generated from the trackway. The collected runoff may be conveyed to a local storm drain system, based on the hydraulic capacity or, conveyed to the nearest natural water body, after applying appropriate treatment measures as defined in the BMP section of this chapter. Refer to Standard and Directive Drawings for detailed track drainage configuration. Pipe size, material, slope, and access hole requirements for a closed track drainage system shall be consistent with the criteria in Section 8.5.2.3.

In a shared corridor, drainage shall be kept separate from the drainage system of the third party operator. If any upgrades to the third party's drainage system are anticipated, they shall be performed based on the third party's design requirements.

For criteria not included in this section, references shall be used as follows:

- AREMA shall be followed for design of new track drainage facilities.

8.6.2 Embankments and Cut Slopes

For embankments that support the HST trackway and for cut slopes, refer to the *Geotechnical* chapter for drainage and slope protection requirements.

8.6.3 Bridges/Aerial Structures

Design of HST bridges and aerial structures over waterways and associated drainage facilities shall be coordinated with local agencies or the U.S. Army Corps of Engineers. The 2 basic designs involved in this section are the HST aerial structures and HST structures over waterways (HST bridges).

RFP No.: 13-57 – Addendum No. 5 - 10/09/2014

Single track HST bridge and aerial structure decks shall have a 2 percent cross slope towards the cable trough. Double track HST bridge and aerial structure decks shall have an inverted crown with 2 percent cross slope. Sufficient number of drain inlets shall be provided on the structure deck to drain the entire deck section without passage of runoff over structure expansion joints. Design of track structure shall allow passage of water towards the deck drain inlet is located. Drain inlets shall be 8 inches in diameter. In non-ballasted structures, drain inlets shall have a slotted brass cover securely attached to the inlet with screws. In ballasted structures, an 8-inch diameter half-dome perforated corrugated galvanized pipe shall be placed on the flow line leading to the drain inlet.

Drain inlets shall be connected to 6-inch diameter minimum drain pipe which run inside the box girder of the structure. The drain pipes shall have a minimum 1 percent slope. Drain pipes crossing the expansion joint shall be designed to allow multi directional movement of the pipe during a seismic event. The range of movement shall accommodate the maximum movement of the expansion joint.

Drainage of track sections on embankment or retained fill leading to a bridge or aerial structure shall be captured outside of the structure abutment.

Discharge of deck drainage through columns is permissible provided it meets the receiving body's regulatory requirements. If discharge pipes are located within columns, cleanouts shall be provided outside the column plastic hinge limit as specified in the *Structure Chapter*. Drain pipes crossing the gap between the box girder and the column shall have flexible connections to allow multi directional movement of the pipe during a seismic event.

This section presents the minimal criteria and design standards for the hydraulic evaluation and design associated with bridge drainage within the corridor. For criteria not included in this section, the following references shall be used:

- AREMA's "Roadway and Ballast" chapter for detailed information on the magnitude and level of scour created at piers and abutments and countermeasures
- HDS-01, Hydraulics of Bridge Waterways, FHWA for bridge hydraulic analyses
- HEC-21, Design of Bridge Deck Drainage, FHWA for bridge deck drainage design
- HEC-09, Debris Control Structures Evaluations and Countermeasures, FHWA for mitigating debris impacts to bridge structures
- Refer to local agency manuals for local criteria within each jurisdiction.
- The *Structures* chapter shall be referenced to ensure coordination with structural design of bridges and aerial structures.

8.6.3.1 Freeboard Protection

For the hydraulic design of bridges and aerial structures, a minimum of 2 feet of freeboard above the design frequency water surface elevation shall be provided.

RFP No.: 13-57 – Addendum No. 5 - 10/09/2014

8.6.3.2 Erosion Control and Scour Protection

Protection measures shall be taken to protect bridges or aerial structures, piers, and embankments from erosion and scour. Measures include providing riprap and/or vegetation on the slopes and streambed and increasing the distance between embankments. Where applicable, energy dissipators may be provided in accordance with criteria provided in Section 8.5.2.4.

8.6.3.3 Pier Design and Location

For structures over waterways, the spacing and location of the structural piers can significantly affect the hydraulic characteristics of the existing waterways. In locations where pier columns and protection walls interfere with drainage, an alternative drainage facility shall be provided to collect and carry water to a drainage system.

Piers shall be located outside of drainage channels and natural washes, where possible, to minimize negative impacts associated with scour and erosion at the pier. Where piers are located within channels, a streamlined design at the pier nose shall be considered. This shall be obtained by providing circular or rounded shapes at the upstream and downstream faces of piers in order to reduce flow separation, aligning bents with the direction of flow and increasing the length of the bridge to decrease velocities.

Debris buildup may occur at piers which can reduce the hydraulic capacity of the channel, increase the local scour, and potentially cause the pier to fail. The design shall consider the type of debris that could impact the pier. Depending on the debris type, protective devices such as steel plates, debris deflectors, wingwalls, and upstream debris catchment structures shall be used.

8.6.3.4 Deck Drainage System

Stormwater on a bridge or aerial structure surface can affect the water spread on the structure into the trackway, cause complications with maintenance, and negatively impact the aesthetics of the structure, by corrosion or debris. The deck drainage system includes the bridge or aerial structure deck, gutters, inlets, pipes, downspouts and end collectors, which are discussed in the following subsections.

A. <u>Bridge/Aerial Structure Deck</u>

A longitudinal drainage system shall be provided along the deck to minimize standing water on the bridge or aerial structure. Criteria for bridge or aerial structure deck design are as follows:

- For bridges and aerial structures with ballasted track, the minimum half circle perforated corrugated galvanized drain pipe, embedded in the ballast, shall be 8 inches minimum.
- For bridges and aerial structures with non-ballasted track, a drainage trough shall be designed to convey the deck drainage.
- The cross slope of the bridge/aerial structure deck shall be 2 percent.
- Standing water on the bridge or aerial structure shall not be permitted.

RFP No.: 13-57 – Addendum No. 5 - 10/09/2014

B. Inlets and End Collectors

The bridge and aerial structure end collectors are drainage inlets that collect flow before it reaches the structure and prevent flow from leaving the bridge or aerial structure. End collectors are typically drop inlets which convey a higher capacity; slotted drains may be used. Stormwater upstream of a bridge or aerial structure shall be fully collected prior to reaching the structure. To avoid flooding on the bridge or aerial structure and backup in the pipes, inlets and drains on the bridge or aerial structure shall account for a 50 percent clogging factor. Water accumulating on structure decks with ballasted tracks shall be drained by a semicircular or U-shaped channel formed in the concrete invert between track centerlines or at the low point of a single track aerial structure. Inlets shall be provided at intervals to collect the flow into the storm drainage system.

C. Pipes and Downspouts

The minimum longitudinal slope of drain pipes inside the box girder shall be 1 percent or generate a minimum velocity of 2 feet per second. Downspouts shall be considered in the aesthetics of the bridge or aerial structure. Pipes and downspouts located within the concrete of the structure provide more challenges for access and maintenance. Cleanouts shall be provided at convenient and accessible locations along the pipe. Cleanouts shall be located such that these can be reached from the ground for easy access for personnel, and at places where the pipes bend and debris build-up may occur. Cleanout locations shall be identified.

Outfalls from downspouts may discharge directly into storm drains, or nearby receiving water, considering the water is treated before discharging offsite. If the downspout discharge is directly to surface drainage, the free-falling water shall not come into contact with the structure members to avoid corrosion and deterioration. Stormwater from the bridge or aerial structure shall also not negatively impact the surface below; erosion control devices may be necessary at the outfall location and the surface channel shall be designed to carry and transfer the increase in flow. Downspouts that discharge directly to a storm drain shall connect to a manhole for easy access. The outfall invert shall be a minimum of 0.25 feet higher than the manhole invert to avoid debris clogging the storm drain.

Refer to Standard and Directive Drawings for drainage of aerial structures.

8.6.4 Tunnels

For drainage requirements in tunnels, refer to Standard and Directive Drawings. Drainage from tunnel and cut-and-cover structures shall discharge to portals or to a low-point sump in pump station.

8.6.5 Retaining Walls

Provide a concrete lined gutter behind retaining walls to redirect storm runoff away from the walls, refer to Standard and Directive Drawings. For other drainage requirements at retaining walls, refer to the *Geotechnical* chapter.

RFP No.: 13-57 – Addendum No. 5 - 10/09/2014

8.6.6 Trenches

Where the ground water table is high and interferes with the stability of track bed and side slopes, the trackway shall be in a trench section. Trench drainage discharges to a low-point sump in pump station and is discharged to local drainage system. Refer to the *Structures* chapter for trench wall heights for flood protection. For drainage concept in trench sections, refer to Standard and Directive Drawings.

8.6.7 Critical HST Structures/Facilities

HST critical facility sites, such as traction electrification system, automatic train control, communications, vent structures, traction power supply sites, operation control centers, yards, etc., shall be designed to drain so that the finish floor elevation or top of slab foundation of the facility sites remain 6 inches above a 500-year flood elevation or 2 feet above 100-year flood elevation, whichever is greater.

8.6.8 Stations and Platforms

Refer to the *Stations* chapter for station area and station platform drainage requirements. Station area drainage should discharge to the nearest municipal drainage collection system after proper treatment as necessary. Refer to Standard and Directive Drawings for station trackway drainage system within the station area.

Station drainage shall accommodate deluge system for depressed and underground stations.

8.6.9 Roadways

The following sections outline minimal drainage criteria for roadways, street improvements, parking lots and storm drains. For criteria not addressed in this section, the following references shall be used:

- Caltrans HDM criteria shall be followed for design of roadway drainage, including subsurface drainage facilities within the corridor.
- For third party roadway drainage requirements, refer to third-party's drainage criteria.

8.6.9.1 Surface Drainage

Physical characteristics of surface drainage for roadways leading to stations, yards, and other wayside facilities shall accommodate the following:

- Cross flow shall not be more than 0.1 cubic feet per second.
- Ponding shall be prevented in parking lots where vehicle stalls are located.
- Sound engineering judgment shall be used with careful consideration to train, vehicular and pedestrian traffic.

RFP No.: 13-57 – Addendum No. 5 - 10/09/2014

8.6.9.2 Storm Drain Design

Storm drains shall be designed in coordination with roadway and trackway surface flow. Inlets, subsurface piping, and maintenance access shall be considered when designing storm drains. Refer to the *Utilities* chapter for clearance requirements of storm drain facilities with adjacent infrastructure facilities.

8.6.9.3 Inlets and Maintenance Access

Inlet types may include curb-opening inlets, grate inlets, slotted drain inlets and a combination of all these types. Inlet type shall consider the proposed location of the inlet and the required capture capacity the inlet must convey. The location and spacing of inlets shall be designed to prevent ponding and flooding in traveled lanes. Inlets are generally placed upstream of pedestrian ramps and street intersections. Grate inlets are not recommended for pedestrian pathways. Inlets shall be placed prior to a superelevation reversal to prevent cross flow on the roadway.

Inlet capacity depends on the size and shape of the opening, grate type and the roadway geometry upstream of the inlet. To mitigate back-up and ponding of water, a minimum clogging factor of 50 percent shall be used for all inlet designs.

Design of manholes shall conform to the following maintenance hole spacing requirements:

Table 8-5: Maximum Manhole Spacing Requirements

Pipe Diameter	Maximum Spacing Requirements
Any pipe that cannot reach a self-cleaning velocity of 2.5 feet/sec.	300 feet
Less than 24-inches	400 feet
24 inches to 48 inches	400 feet to 800 feet
Greater than 48 inches	1,200 feet

Engineering judgment shall be used in determining spacing requirements. Access logistics for pipe maintenance shall be considered. Manholes and associated storm drains shall be located out of the roadway traveled way and intersections to avoid disruptions to traffic. If the subsurface drain is proposed to cross the tracks, manholes shall be considered for use at the Authority's right-of-way limits.

8.6.9.4 Pipe Characteristics

Subsurface pipes shall be designed at full flow capacity. To determine the appropriate pipe size, shape and material, Manning's equation shall be applied as described in Section 8.5.2. Storm drains may operate under pressure, provided the pipe material will not be jeopardized due to pressurization; however, the hydraulic grade line shall not rise above the manhole or inlet structure, and shall be a minimum of 1 foot below the surface finished grade.

RFP No.: 13-57 – Addendum No. 5 - 10/09/2014

Generally in urban areas, storm drain pipes are RCP material to provide a longer life of the system and minimize maintenance over the life of the pipe. RCP pipes shall be designed for facilities crossing under the tracks. Other pipe materials, including corrugated steel, HDPE and PVC may be considered along the corridor and at train stations, based on a life cycle cost analysis to justify the use of pipe type. For corrosion protection of metallic and RCP pipes refer to the *Corrosion Control* chapter. Criteria for pipe size and cover are as follows:

- Minimum pipe size within roadways shall be 18 inches
- A 3-foot minimum cover shall be provided for pipes

8.7 Detention/Retention of Surface Water Runoff

The main purpose of a detention basin is to temporarily store runoff volume to reduce peak discharge by allowing flow to be discharged at a controlled rate. This section provides minimal design criteria for hydraulic evaluation and design of detention basins, for the purpose of flood control and stormwater management.

Caltrans identifies detention basins as a design pollution prevention BMP, which temporarily detains runoff to allow sediment and pollutant to settle. If the detention basins are designed to include the purpose of a BMP, reference shall be made to Section 8.8. Proper treatment of polluted runoff shall be included in the design of the detention/retention basins. Retention storage can be defined as a depression or low point where water accumulates with no possibility for escape as runoff. These facilities allow for infiltration into underlying soils, and are considered as "Infiltration Devices."

Several factors such as the peak outflows, spillway sizing, and sedimentation govern the design of detention facilities. For design criteria and detailed design methodologies of detention basins not included in this section, refer to HEC-22, Urban Drainage Design Manual, FHWA.

8.7.1 Peak Flow Reduction and Release Rate

The facility's outlet structure shall limit the maximum outflow to allowable release rates. The maximum release rate may be a function of existing or developed runoff rates, downstream channel capacity, potential flooding conditions, and/or local agency regulations.

The system shall be designed to release excess stormwater expeditiously to ensure that the entire storage volume is available for subsequent storms. The facilities may need a paved low flow channel to ensure complete removal of water and to aid in nuisance control.

8.7.2 Required Storage Estimate

For watersheds greater than 150 acres, the required volume of storage for a detention basin that is necessary for peak flow reduction can be estimated as the difference between the inflow and the outflow hydrographs, using the Hydrograph Method.

RFP No.: 13-57 – Addendum No. 5 - 10/09/2014

The Volumetric Method shall be used to estimate the runoff detention/retention volume for watersheds less than 150 acres for the urban catchment. In this case, uniform rainfall is assumed and the required storage volume can be estimated by the volume difference between the rainfall volume coming to the basin and the runoff volume released from the basin. For simplicity, trapezoidal hydrograph depicted on Figure 8-1 can be considered for volume calculation. The inflow hydrograph has a linear rising limb over the time of concentration of the tributary watershed and the peaking portion of the inflow hydrograph is a plateau from the time of concentration, to the end of rainfall event. The effective rainfall volume is represented by the storage volume shown in the graph, where:

T_c = Time of Concentration (minutes)

T_d = Rainfall Duration (minutes)

Figure 8-1: Trapezoidal Hydrograph

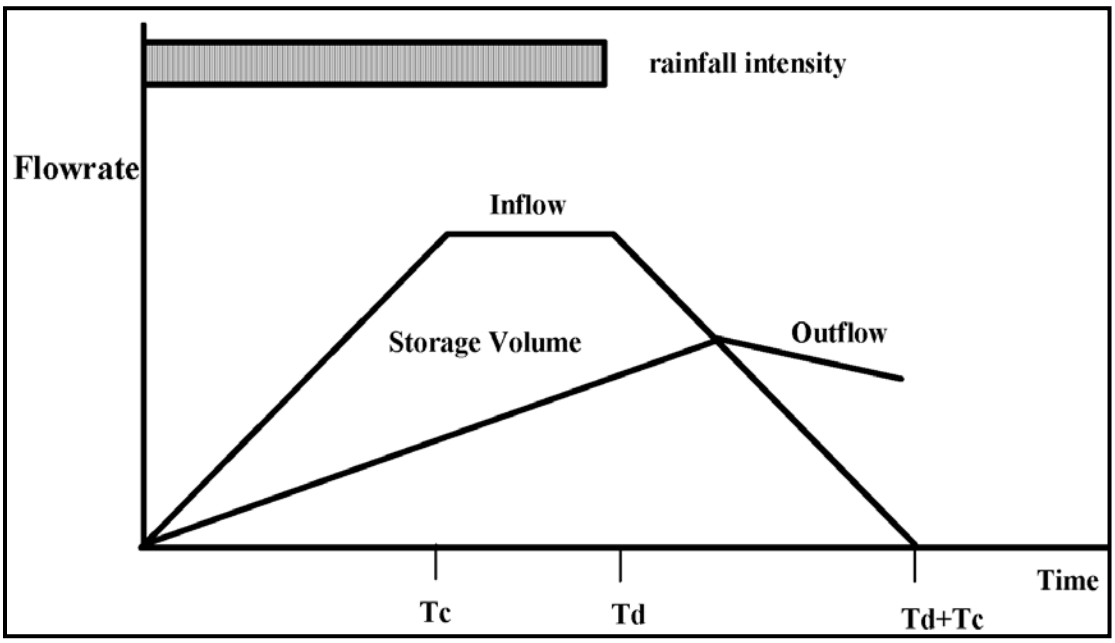

Source: "Detention Basin Sizing for Small Urban Catchments", ASCE J. of Water Resources Planning and Management, Vol. 125, No. 6, November.

8.7.3 Basin Sizing

A stage-storage relationship defines the relationship between the depth of water and storage volume in a detention basin facility. The basin width to length ratio shall be greater than 2 so that the flood flows can sufficiently expand and diffuse into the water body to enhance the sedimentation process. Slopes on embankments shall maintain the bank slope stability. Slopes on earthen embankments shall not be steeper than 4:1 (H:V) and on riprap embankments shall not be steeper than 3:1 (H:V).

RFP No.: 13-57 – Addendum No. 5 - 10/09/2014

Detention basins may be designed in rectangular, triangular, trapezoidal or elliptical shapes, depending on the available right-of-way and required volume of storage. Once the storage volume is determined, the storage basin configuration is determined by multiple layers to accommodate the 10-, 25-, and 100-year storm event storage volumes.

8.7.4 Outlet Structures and Emergency Spillways

Outlet structures of a detention basin consist of low flow outlets and emergency spillway. The outlet structure is formed by risers, perforated plates, orifices, weirs, and culverts. The minimum size of a low flow outlet shall be 18 inches. The low flow outlets are designed based on the orifice principle, while the emergency spillway is designed based on weir equations. The invert of the emergency spillway shall be 2 feet above the major design stormwater surface elevation. It is recommended to have a minimum of 1 foot freeboard.

The obstruction to low flow conduits by debris can reduce outlet design release rate and cause the premature filling of the detention basin with stormwater, reducing the flood protection provided by the structure. All outlet works and low flow conduits shall be provided with a trash rack for debris control. The trash rack shall provide a maximum bar spacing not to exceed two-thirds of the outlet opening or diameter. The total area of the trash rack shall allow for passage of the design flow with 50 percent of the trash rack blocked.

8.8 Stormwater Quality Management

The Stormwater Quality Management program shall comply with requirements of the stormwater discharges from facilities regulated by National Pollutant Discharge Elimination System permit issued by the State Water Resources Control Board, Regional Water Quality Control Boards (RWQCBs) permit and various environmental permits issued by the appropriate local regulatory agencies.

Where a local storm drainage system is not available, such as in rural farm land areas, water treatment requirements shall follow the environmental permits issued by the appropriate regulatory agencies.

An effective stormwater management program involves incorporating stormwater BMPs during the planning and design phases (permanent BMPs), as well as during the construction phases (temporary BMPs) of a project. The Designer shall identify the pollutants of concern in the stormwater discharge because they can have numerous negative impacts such as the following:

- Reducing the storage capacity of hydraulic facilities due to the deposition of sediment and silt
- Increasing toxic release to aquatic life due to the metal dust and toxic fluids from train/vehicle leaks

RFP No.: 13-57 – Addendum No. 5 - 10/09/2014

- Contributing to non biodegradable pollutants such as street litter

Two major types of permanent BMPs are design pollution prevention BMPs and treatment BMPs. The Storm Water Data Report (SWDR) is a project specific document that documents the permanent BMPs, and shall be prepared for each phase of the project. The SWDR shall be prepared based on Caltrans procedures. The most common temporary BMPs are the construction site BMPs, usually documented using a Storm Water Pollution Prevention Plan (SWPPP). For guidance on evaluation, selection, and design criteria on permanent BMPs, SWDR, temporary BMPs, and SWPPP, the following references shall be used:

- Caltrans Storm Water Quality Handbooks, Project Planning and Design Guide, for design of BMPs
- Caltrans HDM design criteria
- Caltrans Storm Water Quality Handbooks, Construction Site Best Management Practices manual for implementation of stormwater BMPs during construction
- RWQCB shall be contacted and/or referenced for guidance, where necessary.

8.9 Application of Approved Software

The use of industry accepted hydrologic/hydraulic design programs is recommended. Where the drainage facilities impact or connect to facilities owned by others, local agency criteria shall be applied. The Caltrans HDM General Aspects chapter may be referred for approved software in use.

RFP No.: 13-57 – Addendum No. 5 - 10/09/2014

Chapter 9

Utilities

RFP No.: 13-57 – Addendum No. 5 - 10/09/2014

Revision	Date	Description
0	07 Mar 12	Initial Release, R0
1	Jun 2013	Revision 1

Table of Contents

9 UTILITIES 9-1
9.1 Scope 9-1
9.2 Regulations, Codes, Standards, and Guidelines 9-1
9.3 Goals, Objectives, and Agreements 9-2
9.3.1 Goals and Objectives 9-2
9.3.2 Agreements 9-2
9.4 HST Utilities 9-3
9.4.1 Electrical 9-3
9.4.2 Fuel Lines 9-4
9.4.3 Water 9-4
9.4.4 Sewer 9-4
9.4.5 Public Telephones 9-5
9.4.6 Service Connections to HST Utilities 9-5
9.5 Third Party Utilities 9-5
9.5.1 High Risk and Low Risk Utilities 9-6
9.5.2 Right-of-Way Encroachment 9-6
9.5.3 Encroachment Justifications 9-6
9.5.4 Rearrangement 9-7
9.5.5 Utility Clearances 9-12
9.5.6 Safety and Protection Measures 9-15
9.5.7 Miscellaneous Utilities and Supporting Facilities 9-16

RFP No.: 13-57 – Addendum No. 5 - 10/09/2014

Acronyms

Authority	California High-Speed Rail Authority
AREMA	American Railway Engineering and Maintenance-of-Way Association
Caltrans	California Department of Transportation
CFR	Code of Federal Regulations
CHST	*Not Used; use HST for California High-Speed Train*
CHSTP	California High-Speed Train Project
CPUC	California Public Utilities Commission
GO	General Order
HST	High-Speed Train
HV	High Voltage
NFPA	National Fire Protection Association
OCS	Overhead Contact System

RFP No.: 13-57 – Addendum No. 5 - 10/09/2014

9 Utilities

9.1 Scope

This chapter provides guidance on standards and procedures for the location, assessment, protection, relocation and placement of underground and overhead utilities located within and in proximity to the California High-Speed Rail Authority's (Authority's) right-of-way (shared or exclusive).

The approach for assessing and addressing third party utility impacts is broadly based on the desire to limit the number of transverse encroachments, eliminate longitudinal encroachments, and eliminate the need for maintenance of third party utilities within the Authority's right-of-way. Utilities specified herein shall include: all physical services, such as electrical power, gas, water, telephone, cable TV, fiber optics, sanitary sewers, other public and private utilities and supporting facilities required to be placed or relocated in the Authority's right-of-way. This chapter does not address California High-Speed Train (HST) storm drains and irrigation systems. Guidance for design and identification of these utilities and supporting facilities will be included in separate chapters of this Design Criteria.

9.2 Regulations, Codes, Standards, and Guidelines

Refer to the *General* chapter for requirements pertaining to regulations, codes, and standards. In addition to the laws and standards relevant to any facility, standards specific to railroad facilities shall be applied.

- Code of Federal Regulations (CFR), Title 49
- California Government Codes
- California Public Utilities Commission (CPUC) General Orders (GOs), Public Utility Codes, Rules of Practice and Procedure, and the Policies and Guidelines
- National Fire Protection Association (NFPA) Standards
- California Department of Transportation (Caltrans)
  - Caltrans Highway Design Manual (HDM)
  - Caltrans Project Development Procedures Manual (PDPM)
  - Caltrans Right-of-Way Manual, Chapter 13
- American Railway Engineering and Maintenance-of-Way Association (AREMA) Manual for Railway Engineering
- American Society of Mechanical Engineers (ASME) Standards

RFP No.: 13-57 – Addendum No. 5 - 10/09/2014

- National Electric Safety Code (ANSI C2/NESC) Standards
- American Water Works Association (AWWA) Standards
- American Petroleum Institute (API) Standards

For installation of utilities, applicable local building, planning and zoning codes and laws shall be reviewed for the passenger stations, maintenance or service facilities as they may be located within multiple municipal jurisdictions or state right-of-way.

9.3 Goals, Objectives, and Agreements

9.3.1 Goals and Objectives

The following goals and objectives shall be considered in development of utility design:

- Protect the Authority's facilities and right-of-way against damage caused by presence of a utility.
- To the extent that is reasonable and feasible, exclude access points for third party utilities from within access controlled right-of-way. This objective is intended to provide a safe environment for operations, minimize inconvenience to the traveling public, and eliminate conditions detrimental to the safety of utility employees during maintenance of its facilities.
- Provide a means of inspection, maintenance, and repair of utilities, as may be required, without disruption of train service.
- Satisfy requirements and criteria of the affected utility owners, however, no betterment shall be included unless specifically agreed between the utility owner and the Authority.

9.3.2 Agreements

- Coordinate with the Authority and utility owner as needed for the rearrangement of the utilities within and adjacent to the Authority's right-of-way.
- Technical requirements of pertinent utility agreement shall be incorporated into the design.
- Coordinate plans developed or being developed by others in adjoining areas to ensure that the overall utility system is comparable to those existing before start of construction and will be compatible with project operations.
- New construction and the protection, support, restoration, and rearrangement of utilities shall be in conformance with the latest technical specifications and practices of the respective utility owner.
- Third party utility design performed by the Designer requires approval by utility owner in coordination with the Authority.

RFP No.: 13-57 – Addendum No. 5 - 10/09/2014

- In the event that there are no standards, design shall be in accordance with the requirements of this chapter.

9.4 HST Utilities

HST utilities are defined as utilities and supporting facilities that serve HST facilities.

9.4.1 Electrical

Electrical service utilities and supporting facilities transmit electrical power from its traction power or facility power substations to facilities such as Overhead Contact System (OCS), ventilation structures, train control houses, passenger stations, and other appurtenant wayside facilities.

Various local or regional power companies provide power to traction power and facility power substations.

If a power company's substation is located within the Authority's right-of-way, the design of the substation site shall follow the requirements of that power company, Section 9.5.5.8 of this chapter on Aboveground Utility Facilities, the *Facility Power and Lighting Systems*, and the *Traction Power Supply System* chapters.

Electrical distribution facilities shall be surface mounted on foundations, supported on structures, or installed underground. Refer to the *Facility Power and Lighting Systems* chapter for design requirements.

Unless otherwise specified, each utility power company will design, furnish, and install all of its cables and/or overhead conductors, including all high voltage (HV) utilities and supporting facilities and connection, from the utility's network up to the point of common coupling (interface connection point).

HST Core Systems (Traction Electrification, Overhead Contact System, Automatic Train Control, and Communications) ductbanks, manholes, conduits and cables located within the Authority's right-of-way or from interface connection point shall be designed by the Designer.

9.4.1.1 Ductbanks

For design of underground ductbanks, refer to the *Facility Power and Lighting Systems* chapter, *Communications* chapter, and Standard Specifications.

9.4.1.2 Manholes and Handholes

Standard manhole and handhole sizes shall be used whenever possible. Refer to the *Facility Power and Lighting Systems* chapter, *Communications* chapter, and Standard Specifications for more information.

RFP No.: 13-57 – Addendum No. 5 - 10/09/2014

9.4.2 Fuel Lines

The design and installation of fuel lines (gas and petroleum) to facilities from service main up to the meter will be done by the individual utility companies providing the fuel, unless otherwise indicated in the agreement between the Authority and the utility company.

The size of fuel supply line and the meter shall be based on peak-demand calculations provided by the Designer.

The clearance requirements for the fuel pipe shall be per the requirements of the utility owner (up to the meter) and of this chapter (from the meter to the facilities).

The design and installation fuel lines within Authority's right-of-way shall comply with the requirements of NFPA 30 and local jurisdictional requirements.

The meter for fuel lines shall be in public right-of-way or in a location accessible to the utility company.

Corrosion control measures for fuel pipelines shall be applied in accordance with the following:

- Federal Safety Standards for Gas Lines, Title 49 CFR, Part 192
- Section 9.5.6.4 of this chapter on Cathodic Protection and Corrosion Control
- The utility company standards and practice

9.4.3 Water

Fire and domestic (potable and non-potable) water service connections shall be designed by the Designer. The size of the domestic connection and meter shall be based upon a peak-demand pressure-loss calculation. The domestic service meter shall be located in public right-of-way or in a location accessible to the utility company and shall meet the requirements of the water company providing the water meter.

Fire flow and pressure data in the existing water main will be furnished by the municipal agency in consultation with the Fire Marshal having jurisdiction. Unless otherwise specified, the fire service in public right-of-way and domestic services up to the Authority's right-of-way and including the meter will be installed by the utility. Location of fire hydrants within the Authority's right-of-way shall be coordinated with and approved by the Fire Marshal having jurisdiction of the site. For standpipe design and installation within passenger station areas and HST tunnels, refer to the *Fire Protection* chapter.

9.4.4 Sewer

Sewer services shall meet the requirements of the Sanitary Sewer District and the appropriate municipal building code. The Designer shall be responsible for sizing and establishing the slope of the sewer services, however, the minimum allowable diameter for a sanitary sewer shall be 8

RFP No.: 13-57 – Addendum No. 5 - 10/09/2014

inches with a minimum slope of 0.7 percent. Location of sanitary sewer manholes shall be accessible to maintenance staff.

9.4.5 Public Telephones

Conduits and wiring for public telephones in passenger stations and parking lots, from the telephone service points to each public telephone location, shall be designed by the Designer and installed by the Contractor. The location and elevation of the conduit stub at the property line shall be indicated on the plans. Unless otherwise specified in the agreement between the Authority and the public telephone service provider, the design and installation of conduits and wirings from telephone distribution network to the Authority's right-of-way will be performed by the public telephone service provider and the portion within the Authority's right-of-way shall be performed by the Contractor. Public telephones will be installed by the telephone company or the service provider. All public telephone service provider conduits and cables shall be terminated at the Entrance Facility Room at each passenger station, building, or facility as described in the *Communications* chapter. Also, refer to the *Stations* chapter for general location, quantity, and description of public phones in passenger station areas.

9.4.6 Service Connections to HST Utilities

Utility service connections to utilities and supporting facilities that lie outside of structures, such as traction power substations, train control houses, etc., shall be shown on the utilities plans. The Designer shall coordinate the service connections with other items of work. The Designer shall ensure that service connections are indicated on its plans and plans for the adjacent construction contracts.

For utility service connections, the Designer is responsible for design of utility service lines from the interface point (i.e., a manhole or a meter) to HST facilities. The utility owner is responsible for design and construction of the utility service through the interface point unless otherwise stated in a utility agreement.

9.5 Third Party Utilities

Third party utilities are defined as utilities and supporting facilities belonging to governmental agencies, public utility corporations, railroads, privately owned companies, and private parties for the provision of sewer, water, drainage, gas, electrical, steam, telephone, cable TV, petroleum product pipelines, fiber optics, and other communications systems. Third party utilities are mainly transmission lines, distribution lines, and the service connections to adjacent properties that are not related to HST operations.

Third party utilities to be relocated, abandoned, or protected in place during construction, whether done by the Contractor or the utility owner, shall be addressed in the construction documents.

RFP No.: 13-57 – Addendum No. 5 - 10/09/2014

9.5.1 High Risk and Low Risk Utilities

Utilities conducting toxic or flammable gases or liquids, pressurized waterlines greater than 80 psi normal operating pressure or in pipelines greater than 8 inches in diameter, and underground electrical supply lines that have potential to ground more than 300 volts, which do not have concentric grounded or effectively grounded metal shields or sheaths, are considered High Risk utilities.

All other utilities are considered Low Risk utilities.

9.5.2 Right-of-Way Encroachment

An encroachment is defined as any structure or object of any kind that is within the Authority's right-of-way but not part of the HST facility. Encroachments allow temporary or permanent use of Authority's right-of-way by a utility, a public entity, or a private party. Encroachments include all public and private utilities within the Authority's right-of-way.

To meet the Authority's goal and objective, to the extent that is reasonable and feasible, exclude access points for utilities from within access controlled right-of-way. This objective is intended to provide a safe environment for operations, minimize inconvenience to the traveling public, and eliminate conditions detrimental to the safety of utility employees during maintenance of its utilities and supporting facilities.

High Risk utilities and supporting facilities shall not be allowed on HST aerial structures, tunnels or through any underground/subgrade trackway under any circumstances.

9.5.3 Encroachment Justifications

Access to third party utilities from the Authority's right-of-way is an exception to criteria and requires Authority's approval.

Where longitudinal or transverse encroachments and installations are required, the Designer shall ensure the following:

- An alternate location is not feasible, from the standpoint of providing efficient utility services in a manner conducive to safety, durability, and economy of maintenance and operations.
- The accommodation will not adversely affect the design, construction, operation, maintenance, safety, or stability of HST system and supporting facilities.
- The accommodation will not interfere with or impair the proposed use or future expansion of HST system and supporting facilities.
- The disapproval of the use of the Authority's right-of-way would result in an immitigable impact to the owner, the environment, or the public.

RFP No.: 13-57 – Addendum No. 5 - 10/09/2014

- The utility will be located in such a manner that it can be serviced, maintained, and operated without being accessed from within the Authority's right-of-way and will not adversely affect safety or cause damage to HST system and supporting facilities.

9.5.3.1 Longitudinal Encroachments

Existing Utility Longitudinal Encroachments – Longitudinal utility encroachments within the Authority's right-of-way shall be considered on a case-by-case basis.

Existing longitudinal utilities located within the existing or proposed Authority's right-of-way shall be relocated to the outside of the Authority's right-of-way unless it can be shown to meet the encroachment justification requirements noted above.

New Utility Longitudinal Encroachments – New third party utilities are not be permitted to be installed longitudinally within access controlled areas. Deviation from this requirement requires Authority's approval.

9.5.3.2 Transverse Encroachments

New utility installations and adjustments or relocation of existing utilities may be permitted to cross the Authority's right-of-way.

To the extent feasible and practicable, they should cross on a line generally normal to, but not less than 60 degrees from the railroad longitudinal alignment.

Transverse crossings that are at less than 60 degrees from the railroad longitudinal alignment shall be classified as a longitudinal encroachment.

Transverse utility encroachments shall comply with the encroachment justification requirements noted above.

With the exception of HV transmission lines and the utilities that can be placed in roadway structures going over Authority's right-of-way, all utility transverse crossings shall be undergrounded. Refer to the *Overhead Contact System and Traction Power Return System* chapter for HV clearance requirements over HST OCS facilities.

Air space leases for wireless communications facilities fall under the general guideline for transverse encroachments and are to be reviewed by and concurred with the Authority which may develop special guidelines for wireless communication facilities.

9.5.4 Rearrangement

To the extent that is reasonable and feasible, proposed third party utilities shall be located outside the Authority's right-of-way. The location, design, and construction of relocated or proposed utilities shall meet the requirements of CPUC GOs and the provisions of this chapter.

In performing utilities rearrangements, due consideration shall be given to the needs of the HST Core Systems design, the requirements and obligations of the utility owners, and goals and

RFP No.: 13-57 – Addendum No. 5 - 10/09/2014

objectives established by the Authority. If temporarily relocated, existing utilities shall be restored upon completion of work. If permanently relocated, the new utility shall be operational before or coincident with the termination of the existing service.

9.5.4.1 Identification of Existing Utilities

The Designer is responsible for determining the identification and location of all utility facilities that lie within the planned construction right-of-way boundaries. This is accomplished by the following:

- Review of procurement documents
- Review of railroads, State, County, or other local jurisdiction's as-builts, permit records, and geographic information system
- A joint field review of the project area with the Authority or its designee (Utility Coordinator) and utility owner's representatives

The need for utility identification and verification is twofold:

- To identify all potential/project conflicts so they may be cleared before project construction commences, either through avoidance or relocation
- To meet the requirements of California Government Code Section 4215

9.5.4.2 Utility Verification Request to Owner

Prepare and furnish verification maps to each utility owner detailing existing or potentially existing utilities and supporting facilities within the project area. The request letter shall include the elements shown in Caltrans Right-of-Way Manual Chapter 13 Exhibit 13-EX-10. The Designer shall request the utility owner to update the maps for all utilities and supporting facilities including any abandoned facility. Normally the utility owner is allowed 30 days to respond. The Designer shall be responsible for follow-up to ensure timely completion of verification. (Refer also to CPUC GO No. 128, Rule 17.7 for legal requirements for regulated utility owner to provide facility location information.)

9.5.4.3 Positive Location of Underground Utilities

Positive location of all High Risk or Low Risk utilities and supporting facilities shall be accomplished by potholing; methods of potholing shall be determined by the utility owner to determine horizontal and vertical position of the facility. Combination of methods may be more effective than a single method. The Designer, through the Authority, shall make a written request to the utility owner for the positive location of their utility facility. With the concurrence of the utility owner, potholing and surveying of the utility shall be performed and shown on the contract documents.

All utilities and supporting facilities within the construction area must be positively located within 0.5 feet for both horizontal and vertical location. For transverse utilities and supporting facilities, the positive location should be made on either side of the trackway and other critical

RFP No.: 13-57 – Addendum No. 5 - 10/09/2014

locations. For longitudinal utilities and supporting facilities, the locations must be done at intervals sufficient to establish the location of the line but in no event at greater than 100-foot intervals. Machine excavation to expose the High Risk or Low Risk utilities and supporting facilities in order to physically locate them must be done by, or at the authorization of, the utility/facility owner.

9.5.4.4 Level of Service and Service Interruptions

A level of service equivalent to the existing service shall be maintained for adjacent properties, residents, and businesses throughout construction by supporting utilities in place, diverting utilities, or providing alternative temporary utilities and supporting facilities.

Interruption of existing utilities service shall be minimized. Service shall not be interrupted without the prior written consent of utility owners.

9.5.4.5 Placement

Pipes shall be designed to support dead loads imposed by earth, subbase, pavement, ballast, structures, track, and dynamic forces exerted by anticipated train loads when the pipe is operated with the design range of internal pressure from maximum to zero.

Utility lines crossing beneath at-grade trackway shall conform to the Pipelines section of the AREMA Manual for Railway Engineering, except as modified in these criteria, and the following:

- Casing pipes shall be provided for all utility carrier pipes crossing trackway and structure foundations and buildings.
- Electrical ducts, telephone, and fiber optic conduits in ducts will not require casing pipe where the ducts are encased in concrete and the strength of the utility facility is capable of withstanding rail system loading. Refer to the *Structures* chapter for rail system loading requirements.
- Where new trackways are constructed over existing utilities that are not in conflict with the construction and operations of the HST Core Systems conduits and existing utilities to be continued in service, the utility facilities shall be uncovered and encased in accordance with this Design Criteria.
- Utilities shall not be placed in any manner or position which may cause damage to or impair the safety of the HST Core Systems conduits.
- Utilities shall not be placed within culverts and/or under waterway crossings.
- Where a utility crosses a HST utility within the Authority's right-of-way, the HST utility shall be maintained above the third party utility.

When utility and supporting facility rearrangement are designed by the utility or facility owner, the Designer shall coordinate and furnish data so that the owner may complete its design in a timely fashion. The Designer shall review the facility owner's proposal to ensure that it is

RFP No.: 13-57 – Addendum No. 5 - 10/09/2014

compatible with the HST Core Systems conduit design and that of other affected owners. The Designer shall include such arrangement as facility alignments on its plans and shall provide appropriate copies for distribution to affected facility owners.

9.5.4.6 Carrier Pipes

For non-flammable substances, the carrier pipe and joints within the Authority's right-of-way shall be of acceptable material and construction per AREMA requirements. Joints for carrier pipe operating under pressure shall be mechanical or welded per AREMA and ASTM requirements. Resilient type joints shall be used where the combination of fill height and foundation soil compressibility could adversely affect the permanence and watertightness of rigid type joints.

For flammable substances, the carrier pipe that has to be relocated or replaced within the Authority's right-of-way shall be designed, installed, and tested in accordance with the current standards of the utility owner and the following:

- Title 49 CFR Part 192 "Transportation of Natural and Other Gas by Pipeline: Minimum Federal Safety Standards", Part 193 "Liquefied Natural Gas Facilities: Federal Safety Standards", and Part 195 "Transportation of Hazardous Liquids by Pipeline"
- California Government Codes, Section 51010–51019.1
- ASME B31.8 "Gas Transmission and Distribution Piping Systems" and ASME B31.4 "Liquid Transportation System for Hydrocarbons, Liquid Petroleum Gas, Anhydrous Ammonia and Alcohols"
- "API Recommended Practice (RP 1102) Steel Pipeline Crossing Railroads and Highways"
- CPUC GO No. 112-E "Rules Governing Design, Construction, Testing, Operation, and Maintenance of Gas Gathering, Transmission, and Distribution Piping Systems" except that allowable stresses for the design of steel pipe shall conform to AREMA requirements
- Steel carrier pipes shall be protectively coated and provided with a cathodic protection system and test monitoring facilities in conformance with the requirements of this chapter and the *Corrosion Control* chapter.
- Pipelines carrying flammable gas products shall, where practicable, cross any portion of the HST Core Systems conduits where tracks are carried on an embankment.
- Liquid-petroleum lines in proximity or crossing underground structures shall also conform to the requirements of NFPA 30.

9.5.4.7 Casings

Underground utilities and supporting facilities located within the Authority's access controlled right-of-way shall be encased. Casings are required to protect HST safe operation and facilitate maintenance of utilities crossing under Authority's access restricted right-of-way without the need to enter Authority's right-of-way.

RFP No.: 13-57 – Addendum No. 5 - 10/09/2014

- Casings shall consist of steel, corrugated steel, ductile iron, or reinforced concrete pipe in accordance with the latest industry codes and standards, AREMA requirements, and the requirements specified below.
- Steel casings shall be 3/8 inch minimum thickness with welded joints.
- Electrical and communication lines may be installed in non-metallic casing.
- Casing pipes and joints shall be watertight and shall be capable of withstanding train loading as specified in the *Structures* chapter.
- Casings shall be sloped to drain.
- Casings shall be protected against corrosion by using corrosion resistant casing material and interior and exterior protective coatings, or other approved methods in conformance with the requirements of this chapter and the *Corrosion Control* chapter. Care shall be taken to select materials which will not be damaged through contact with dissimilar metal.
- Casings shall be cathodically protected per the requirements of this chapter and the requirements of the utility owners.
- Metallic casings shall be grounded and bonded in conformance with the requirements of the *Grounding and Bonding Requirements* chapter.
- Steel casing pipe shall have a minimum yield strength of 35,000 psi. Wall thickness for steel casing pipe shall conform to AREMA requirements for steel casing pipe for E80 loading.
- Ductile iron pipe may be used for a casing provided the method of installation is by open trench. Ductile iron pipe shall conform to ANSI/AWWA C151/A21.51 "Ductile-Iron Pipe, Centrifugally Cast". The pipe shall be of the mechanical-joint type or plain-end pipe with compression-type couplings.
  - For non-flammable substances the strength of ductile iron pipe shall be computed in accordance with ANSI/AWWA C150/A21.50 "Thickness Design of Ductile-Iron Pipe", to sustain external loads.
  - For flammable substances ductile iron pipe shall conform to ANSI/AWWA C151/A21.51 "Ductile-Iron Pipe, Centrifugally Cast".
- Reinforced concrete pipe, with gasketed watertight joints, may be used for a casing pipe for non-pressurized utilities.
- The inside diameter of the casing pipe shall be sized to allow the carrier pipe to be removed subsequently without disturbing the casing pipe or trackway. All joints or couplings, supports, insulators, and centering devices for the carrier pipe within a casing shall be taken into account. In no case shall the casing pipe be sized smaller than the following:
  - The inside diameter of the casing pipe shall be at least 2 inches greater than the largest outside diameter of the carrier pipe, joints and couplings.
  - The minimum size of a casing pipe shall not be less than 24 inches.

RFP No.: 13-57 – Addendum No. 5 - 10/09/2014

- Casing pipe shall extend beyond the Authority's right-of-way to a sufficient distance to allow for access to the casing by open excavation. The minimum distance outside the right-of-way shall be 3 feet plus the distance between the bottom of the casing and top of finished grade at the right-of-way line, measured at the right angle to the right-of-way. For flammable utilities, the extent of casing shall not be less than 45 feet from the track centerline, measured at the right angle to the track centerline.
- Where the ends of the casing are below ground, they shall be properly protected against the entrance of foreign material, but shall not be tightly sealed.
- Where the ends of the casing are at or above ground surface and above high-water level, they may be left open provided drainage is afforded in such a manner that leakage will be conducted away from the tracks or structures.
- CPUC GO No. 128, "Rules for Construction of Underground Electrical Supply and Communication Systems" shall govern for all pertinent applications.
- Casings carrying fluids and gases shall be properly vented. Vent pipes shall be of sufficient diameter, but in no case less than 2 inches in diameter, projecting through the ground surface beyond the Authority's right-of-way line. Vent pipes shall extend no less than 4 feet above the ground surface. Top of vent pipes shall be fitted with a down-turned elbow, properly screened.

9.5.5 Utility Clearances

The minimum requirements for utility clearances shall be as defined by the CPUC GOs as applicable, Caltrans HDM and PDPM, AREMA, utility owner's requirements, and these Design Criteria. These requirements apply to HST Core Systems related facilities as well as those owned by others.

In addition, High Risk and Low Risk utilities shall comply with the following requirements:

- High Risk Utilities
  - Maintain 500 feet minimum horizontal separation from flammable gas or hazardous liquid utility to other High Risk utilities
  - Maintain 50 feet minimum horizontal separation from non-flammable gas or hazardous liquid utility to other High Risk utilities
  - Maintain 5 feet minimum horizontal separation from Low Risk utilities
  - Maintain 20 feet minimum horizontal separation from non-load carrying and load carrying structural elements, including OCS pole foundations and downguys
  - Maintain 3 feet minimum vertical separation from drainage pipes/structures
- Low Risk Utilities

RFP No.: 13-57 – Addendum No. 5 - 10/09/2014

- Maintain 3 feet minimum horizontal separation from other Low Risk utilities
- Maintain 5 feet minimum horizontal separation from load carrying structural elements, including OCS pole foundations and downguys, and 3-foot minimum horizontal separation from other structures
- Maintain 3 feet minimum vertical separation from drainage pipes

The above clearances are minimum requirements. The Designer shall verify the adequacy of these standards.

Electrical and communication lines within the Authority's right-of-way shall comply with the above requirements except that a concrete encased ductbank may be used in lieu of steel casing pipe. All underground electrical utilities and supporting facilities within the planned construction area shall meet the minimum clearance requirements as defined in CPUC GOs.

9.5.5.1 Underground Utilities within At-Grade Section

Where a portion of the utility line crosses under HST right-of-way, the utility shall be encased. The casing under the track shall be a minimum of 6 feet below top of rail and a minimum of 3 feet below the flow line of the ditch or drainage pipe next to the track. Refer to Standard and Directive Drawings for utility clearance requirements. Casing shall be provided for utilities located outside HST right-of-way but within the zone of train loading influence or if the future utility maintenance requires excavation that may impact the integrity of HST infrastructure.

Casing pipes shall not be placed within the limits of prepared subgrade unless the backfill material for the culvert and its compaction meet the requirements of prepared subgrade, refer to the *Geotechnical* chapter for limits of prepared subgrade, material, and compaction requirements. Casing pipes shall not be less than 6 feet below top of rail and at the closest point. Deeper installations may be required to avoid conflicts with the HST Core Systems under track conduits and buried facilities. Casing for flammable gas or hazardous liquid utility pipe shall be a minimum of 10 feet below top of rail.

Where the casing is not directly beneath the trackbed, the depth of ground cover shall not be less than 4 feet. A 6-inch-thick layer of reinforced red concrete shall be placed over the casing pipe if 3 feet of ground cover cannot be provided between top of casing pipe and bottom of ditch.

9.5.5.2 Underground Utilities within HST Core Systems Facility Sites

Utilities located within the HST Core Systems facility sites, such as traction power facility and Stand Alone Radio Sites, shall be relocated outside of the Authority's right-of-way.

RFP No.: 13-57 – Addendum No. 5 - 10/09/2014

9.5.5.3 Underground Utilities within Authority's Roadways and Parking Lots

Underground utilities within roadways and parking areas shall have a minimum of 3 feet cover over casings. Additional cover shall be provided where necessary to comply with the utility owner's standards.

9.5.5.4 Underground Utilities within HST Aerial Structure Section

Underground utilities within 5 feet of a HST pier or abutment foundation shall be relocated in accordance with the requirements of this chapter and the utility owner's clearance requirements. Existing utilities that do not need to be relocated shall be encased in accordance with the requirements of this chapter with the following exceptions:

- Where utilities are within a jurisdictional authority's roadway or railroad's right-of-way
- Casings do not need to be designed per Cooper E-80 loading requirements but are subject to site specific loading requirements.

Access manholes to utilities shall be relocated outside Authority's right-of-way unless such manholes are located within roadways or access roads of other jurisdictional authorities.

Designer shall submit a utility protection and monitoring plan for utilities within the zone of influence of excavation limits to the utility owner for review and approval.

9.5.5.5 Underground Utilities within HST Trench Section

Where a trench section is 8 feet or less from the original ground, the utilities shall cross under trench sections in casing and top of casing shall be a minimum of 8 feet below top of rail.

Where a trench section is deeper than 8 feet, utilities shall cross over the trench section in a utility bridge that spans the entire width of trench section. The minimum clearance from the bottom of bridge structure shall be per requirements of the *Trackway Clearances* chapter and the Standard and Directive Drawings for trench sections.

In all other cases, the utility shall be relocated so that the utility crossing can satisfy 1 of the conditions stated above.

9.5.5.6 Underground Utilities within HST Tunnel Section

For utility clearance requirements within a tunnel section, refer to Standard and Directive Drawings for tunnel sections.

9.5.5.7 Overhead Utilities

Overhead utilities shall cross the tracks at local street, or highway overpasses. Such utilities shall either be contained within the overpass structure, or if attached to the outside of the overpass structure, shall be encased in a steel casing sleeve, which shall be grounded and bonded in accordance with the *Grounding and Bonding Requirements* chapter. Where electrical lines with voltage less than 30 kV and communication lines cannot be accommodated in an overpass structure, they shall be relocated underground per clearance requirements established

RFP No.: 13-57 – Addendum No. 5 - 10/09/2014

in this chapter. Clearances for overhead electrical lines with voltage higher than 30 kV shall be governed by CPUC GO No. 95 "Overhead Electric Line Construction" or National Electrical Safety Code (ANSI C2/NESC) wire to wire clearance requirements, whichever is more stringent, and shall be modified to a higher class of construction:

- Aerial utility facilities shall have the supporting poles, towers, and guys located outside the Authority's right-of-way. Where such condition is impractical, a design variance shall be submitted to the Authority.
- At the span, where the wires cross the OCS conductors, the utility shall be double-dead-ended to avoid a single point of failure, and the poles shall have back guys away from Authority's right-of-way, so that the wires are not dropped onto the tracks.

9.5.5.8 Aboveground Utility Facilities

All above ground utilities shall be moved outside the Authority's right-of-way or conform to the requirements of Sections 9.5.5.1 to 9.5.5.5.

9.5.6 Safety and Protection Measures

Support the Authority in preparation of emergency response access and procedures to handle a situation in which a pipeline leak or railroad derailment or incident may jeopardize the integrity of the pipeline. Local conditions shall be considered when developing these procedures. Refer to the *System Safety and Security* chapter for guidelines.

9.5.6.1 Call Before You Dig

The Designer shall include in its plans the instruction to contact Underground Service Alert and other railroad owners, such as Union Pacific Railroads' "Call Before You Dig" requirements, within the railroad's right-of-way prior to any excavation.

9.5.6.2 Shut-off Valves

Accessible emergency shut-off valve(s) shall be located as close to the Authority's right-of-way as practicable and as mutually agreed to by the Designer, the Authority, and the utility owner. These valves shall be marked with signs for identification. Where there are existing automatic control shut-off valve stations at locations and within distances acceptable to the Authority, additional valves may not be required. Valves shall not be located within the Authority's right-of-way.

9.5.6.3 Utility Markers

Utility markers shall be placed at points where the centerline of the utilities intersects the boundaries of the right-of-way line as they enter and exit the Authority's right-of-way.

Markers shall identify each utility, its owner, HST milepost, and depth. Markers shall consist of a metal target plate with reflective background mounted on a metal post.

RFP No.: 13-57 – Addendum No. 5 - 10/09/2014

The front face of the target plate shall be marked as indicated in Standard and Directive Drawings for wayside signage and graphics or as required by the utility owner with the milepost and with a symbol identifying the type of the facility, both reading vertically from top to bottom.

The rear face of the target plate shall be marked with the name of utility owner and telephone number for emergency contact, both reading vertically from top to bottom.

Markers shall be oriented so that the front face is facing the trackway.

For facility naming conventions, refer to the CHSTP Plan Preparation Manual.

9.5.6.4 Cathodic Protection and Corrosion Control

Cathodic protection and corrosion control measures shall be applied to all relocated and new metallic and reinforced concrete underground utilities. These measures shall include: protective exterior coating, electrical continuity of pipes, electrical isolation of new and existing pipes, cathodic protection, and test facilities as appropriate. Soil and groundwater corrosive characteristics shall be determined and documented during the Baseline Corrosion Survey. Analysis of soil boring samples obtained during geotechnical survey shall supplement on-site measurements and shall be the basis for corrosion control design. Cathodic protection and corrosion control of carrier pipes and casings shall be in accordance with AREMA requirements and the *Corrosion Control* chapter.

In addition, to minimize the possibility that utility pipelines become part of the Traction Power Return System, insulated joints or couplings shall be installed at or adjacent to the shut-off valves or at a similar location if shut-off valves are not required.

9.5.7 Miscellaneous Utilities and Supporting Facilities

9.5.7.1 Railroad Utilities

Signals and communication lines belonging to railroad companies may be affected by construction of the California High-Speed Train Project (CHSTP). The design and rearrangement of such utilities and supporting facilities that conflict with the CHSTP shall be performed by the facility owner in accordance with owner's standards.

Where HST utilities and supporting facilities impact railroad utility facilities or where rearrangement of other utility facilities will impact or potentially affect the operation of railroad utility facilities, the Designer shall coordinate its work with the Authority so that adequate data is furnished to the railroad to complete its work. The Designer shall include the rearrangement of railroad utilities in the utilities plan.

9.5.7.2 Street Lights and Traffic Control Devices

Traffic control devices and street lighting facilities belonging to a third party agency may be affected by construction. Any facility affected or impacted by the construction shall be replaced

RFP No.: 13-57 – Addendum No. 5 - 10/09/2014

in-kind, unless otherwise indicated in the agreement between the Authority and the affected agencies. Refer to the current standards of the governing agency having jurisdiction over the affected traffic control devices or street lighting facility.

9.5.7.3 Fire Alarm and Police Communication Systems

Protection, relocation, and support-in-place of the fire alarm and police communication systems within construction limits shall be in strict conformance with the current standards of the governing agency or municipality.

The Designer shall indicate which emergency communication lines are to be maintained complete in-place, removed, protected and supported, temporarily relocated and replaced after construction is complete. The lines to be abandoned or are already abandoned shall also be indicated.

9.5.7.4 Vaults

Private vaults surrounding the project area that do not encroach upon the Authority's right-of-way shall be protected in place. Vaults that are found to be in conflict with the proposed construction shall be subject to demolition and/ or relocation.

Relocation, abandonment, or other work involving private vaults extending from adjoining buildings into public space shall be in accordance with rules, regulations, and practices of the governing agency, which shall include the city building codes, electric codes, plumbing codes, and National Electrical Safety Code (ANSI C2/NESC). Locations and dimensions of vaults affected by the project shall be verified. Quantities and types of goods or facilities including utility services to be removed from the vault shall be verified; the process of deliveries to properties when existing vault entrances require abandonment; and the construction time required to make alterations and occupy the vault shall be determined and incorporated into the design. This information shall be presented to the vault owner, through the Authority, which will arrange for permission to occupy the vault to make the necessary alterations.

RFP No.: 13-57 – Addendum No. 5 - 10/09/2014

Chapter 10

Geotechnical

RFP No.: 13-57 – Addendum No. 5 - 10/09/2014

Revision	Date	Description
0	02 Mar 12	Initial Release, R0
0.1	07 Dec 12	Addendum 07 – CP01
1	June 2013	Revision 1
2	Feb 2014	Revision 2

Table of Contents

10 GEOTECHNICAL 10-1
10.1 Scope 10-1
10.2 Regulations, Codes, Standards, and Guidelines 10-1
10.3 General Geotechnical Design Requirements 10-3
10.4 Subsurface Investigation and Data Analysis 10-5
10.5 Geotechnical Reports 10-7
10.5.1 Geotechnical Data Report (GDR) 10-8
10.5.2 Geotechnical Engineering Design Report (GEDR)[1] 10-9
10.5.3 Geotechnical Baseline Report for Construction (GBR-C) 10-11
10.6 Bridge, Aerial Structure, and Grade Separation Foundations 10-11
10.6.1 Geotechnical Data 10-12
10.6.2 Load Modifiers, Load Factors, Load Combinations, and Resistance Factors 10-12
10.6.3 Allowable Foundation Settlements for Primary Type 1 Structures 10-12
10.6.4 Bridge, Aerial Structure, and Grade Separation Foundation Types 10-13
10.6.5 Other Design Considerations 10-22
10.7 Station and Miscellaneous At-Grade Structures 10-23
10.7.1 Shallow Foundations 10-23
10.7.2 Deep Foundations 10-24
10.7.3 Miscellaneous At-Grade Structure Foundations 10-24
10.8 Retaining Walls and Trenches 10-24
10.8.1 Design 10-25
10.8.2 Unacceptable Walls 10-25
10.8.3 Stability of Retaining Walls 10-26
10.8.4 Base Pressure 10-28
10.8.5 Hydrostatic Pressure (Buoyancy) 10-28
10.8.6 Settlements and Horizontal Deformations 10-28
10.8.7 Drainage 10-29
10.8.8 Backfill 10-29
10.9 Embankments and At-Grade Earthen Structures for HST Trackway (Primary Type 1) 10-29
10.9.1 Slope Inclination 10-30
10.9.2 Safety Factors 10-30
10.9.3 Settlements 10-30
10.9.4 Benching of Slopes 10-34
10.9.5 Particular Requirements 10-35
10.9.6 Soil Materials Used for Embankments 10-42
10.10 Cut Slopes 10-43
10.10.1 Design of Cut Slopes 10-44
10.10.2 Drainage (Surface and Subsurface) 10-45
10.10.3 Slope Stability Mitigation Methods for Cut Slopes 10-45
10.11 Existing Slopes 10-46
10.11.1 Protection of Existing Slopes 10-46
10.11.2 Drainage (Surface and Subsurface) 10-46
10.12 Cut-and-Cover Underground Structures 10-47
10.12.1 Structural Systems 10-47

RFP No.: 13-57 – Addendum No. 5 - 10/09/2014

10.12.2 Water Pressure (Buoyancy) 10-47
10.12.3 Temporary Support of Underground Structures 10-48
10.12.4 Temporary Lateral Loading Conditions 10-48
10.12.5 Permanent Lateral Loading Conditions 10-49
10.12.6 Deformation Limits for Support of Excavation Systems 10-49
10.12.7 Dewatering 10-50
10.13 Seismic Design 10-50
10.13.1 Design Earthquakes 10-50
10.13.2 Seismic Hazard and Ground Motions 10-50
10.13.3 Liquefaction of Foundation Soils 10-51
10.13.4 Underground Structures 10-52
10.13.5 Effect of Ground Deformation 10-54
10.13.6 Soil-Structure Interaction for Bridges, Aerial Structures, and Grade Separations 10-56
10.14 Track Structure 10-58
10.14.1 Formation Supporting Ballasted Tracks 10-58
10.14.2 Determination of the Thickness of the Trackbed Layers 10-59
10.14.3 Design of Formation for Dynamic Loading from HST Operations 10-60
10.15 Maintenance of Geo-Structures 10-62
10.16 References 10-62

Tables

Table 10-1: Maximum Allowable Settlement Limits [(4),(5)] for Service 1 and OBE Load Cases 10-13
Table 10-2: Pile Load Modifiers, P_m, for Multiple Row Shading 10-18
Table 10-3: Minimum Penetration Depth in Rock 10-23
Table 10-4: Minimum Required Factors of Safety for Embankment Slopes 10-30
Table 10-5: Maximum Residual Settlement Limits 10-32
Table 10-6: Soil Material Suitability for Engineered Fill in Embankments 10-43

Figures

Figure 10-1: Settlements of Embankments 10-31
Figure 10-2: Different Settlement Parts by Time 10-33
Figure 10-3: Typical Section Earthwork Cut/Fill 10-34
Figure 10-4: Earthwork Embankment in Wet Conditions 10-35
Figure 10-5: Drainage Layer under Embankments in Floodplain / High Water 10-36
Figure 10-6: Transition from Concrete Slab to Embankment 10-39
Figure 10-7: Transition from Cut to Embankment 10-40
Figure 10-8: Transition from Bridge, Aerial Structure, or Grade Separation to Embankment 10-41
Figure 10-9: Tunnel Transverse Ovaling and Racking Response to Vertically Propagating Shear Waves 10-53
Figure 10-10: Tunnel Longitudinal Axial and Curvature Response to Traveling Waves 10-53

RFP No.: 13-57 – Addendum No. 5 - 10/09/2014

Appendix

Appendix 10.A: Guidelines for Geotechnical Investigations
Appendix 10.B: Guidelines for Geotechnical Earthquake Engineering
Appendix 10.C: Guidelines for Rock Slope Engineering

RFP No.: 13-57 – Addendum No. 5 - 10/09/2014

Acronyms

AASHTO	American Association of State Highway and Transportation Officials
Authority	California High-Speed Rail Authority
BDS	Bridge Design Specifications
Caltrans	California Department of Transportation
CBC	California Building Codes
CBR	California Bearing Ratio
CEG	Certified Engineering Geologist
CGS	California Geological Survey
CHSTP	California High-Speed Train Project
CPT	Cone Penetration Test
CPT_u	Cone Penetration Test with pore pressure measurements
FLH	Federal Lands Highway
FOS	Factor of Safety
FRA	Federal Railroad Administration
GBR	Geotechnical Baseline Report
GBR-B	Geotechnical Baseline Report for Bidding
GBR-C	Geotechnical Baseline Report for Construction
GDR	Geotechnical Data Report
GEDR	Geotechnical Engineering Design Report
GIP	Geotechnical Investigation Plan
GTGM	Geotechnical Technical Guidance Manual
HST	High-Speed Train
IGM	Intermediate Geomaterials
LOTB	Logs of Test Borings
LRFD	Load and Resistance Factor Design
MASW	Multichannel Array of Surface Wave
M-O	Mononobe-Okabe
MCE	Maximum Considered Earthquake
NEHRP	National Earthquake Hazards Reduction Program
OBE	Operating Basis Earthquake
OCS	Overhead Contact System
PDA	Pile Driving Analyzer
PDDM	Project Development Design Manual
PGA	Peak Ground Acceleration
RAM	Reliability, Availability, and Maintainability
SASW	Spectral Analysis of Surface Waves

RFP No.: 13-57 – Addendum No. 5 - 10/09/2014

SSI	Soil-Structure Interaction
USGS	United States Geological Survey

RFP No.: 13-57 – Addendum No. 5 - 10/09/2014

10 Geotechnical

10.1 Scope

This chapter provides guidance, geotechnical criteria, and requirements for the geotechnical engineering design for earthwork, embankments, and bridges/aerial structures, abutments, underground structures, and culverts for the California High-Speed Train (HST) trackway.

10.2 Regulations, Codes, Standards, and Guidelines

Elements of HST infrastructure, based on their importance to HST, shall be classified as Primary Type 1, Primary Type 2, Complex, and Secondary. Definitions of these elements can be found in the *Seismic* chapter. Design of geotechnical work specified in this chapter applies to Primary Type 1, Primary Type 2, and Complex structures, while the Secondary structures shall be subject to the requirements of the governing local jurisdiction.

Refer to the *General* chapter for requirements pertaining to regulations, codes, and standards. Geotechnical design work for Primary Type 1, Primary Type 2, and Complex Structures shall be in accordance with AASHTO LRFD BDS with California Amendments, these geotechnical design criteria, and the requirements of the following standards and guidelines. Use of the LRFD methodologies in some earthquake engineering and geotechnical engineering areas requires careful examination for applicability. However, any variation to the LRFD methodologies is subject to the Design Variance Process as noted in the *General* chapter.

Standards

- American Association of State Highway and Transportation Officials (AASHTO)
  - AASHTO Standard Specifications for Highway Bridges
  - AASHTO Standard Specifications for Structural Supports for Highway Signs, Luminaires, and Traffic Signals
  - AASHTO Guide Specifications for Design and Construction of Segmental Concrete bridges
  - AASHTO Guide Specifications for Thermal Effects in Concrete Bridge Superstructures
- California Department of Transportation (Caltrans)
  - Caltrans Bridge Design Specification – AASHTO LRFD Bridge Design Specifications and California Amendments (to the AASHTO LRFD Bridge Design Specifications), hereafter referred to as "AASHTO LRFD BDS with California Amendments"
  - Caltrans Seismic Design Criteria (CSDC)
  - Soil and Rock Logging, Classification, and Presentation Manual, June 2010

RFP No.: 13-57 – Addendum No. 5 - 10/09/2014

- California Building Code (CBC)
- International Union of Railways (UIC) Code 719R Earthwork and Trackbed for Rail Lines (2008)

Guidelines

- American Society of Civil Engineers (ASCE), Geotechnical Baseline Reports for Construction – Suggested Guidelines, prepared by Essex, 2007
- Federal Highway Administration (FHWA) Guidelines
  - FHWA Project Development and Design Manual (PDDM), 2011
  - FHWA Geotechnical Technical Guidance Manual (GTGM), 2007
  - Geophysical Methods - Technical Manual (Application of Geophysical Methods to Highway Related Problems, cooperatively with Blackhawk Geosciences), DTFH68-02-P-00083, 2003
  - Soils and Foundations Workshop, NHI Course No. 132012, Volumes I and II FHWA-NHI-06-088, and FHWA-NHI-06-089, 2006
  - Subsurface Investigations – Geotechnical Site Characterization, NHI Course Manual No. 132031, FHWA-NHI-01-031, 2002
  - Evaluation of Soil and Rock Properties, Geotechnical Engineering Circular No. 5, FHWA-IF-02-034, 2002
  - FHWA Drilled Shaft Construction Procedures and LRFD Design Methods, FHWA-NHI-10-016
  - Technical Manual for Design and Construction of Road Tunnels – Civil Elements, FHWA-NHI-10-034
  - FHWA Drilled Shafts: Construction and Procedures and Design Methods, FHWA-IF-99-025
  - FHWA Mechanically Stabilized Earth Walls and Reinforced Soil Slope Design and Construction Guidelines, FHWA-NHI-00-043
  - FHWA Earth Retaining Structures Manual, FHWA-NHI-99-025
  - FHWA Soil Slope and Embankment Designs, FHWA-NHI-01-026
  - FHWA Rock Slopes Reference Manual, FHWA-HI-99-007
  - FHWA Geosynthetics Design and Construction Guidelines, FHWA HI-95-038
  - FHWA Geotechnical Instrumentation, FHWA-HI-98-034
- National Cooperative Highway Research Program (NCHRP) Report 611; Seismic Analysis and Design of Retaining Walls, Buried Structures, Slopes, and Embankments, Transportation Research Board

RFP No.: 13-57 – Addendum No. 5 - 10/09/2014

10.3 General Geotechnical Design Requirements

The geotechnical criteria were developed from operational requirements outlined in the Federal Railroad Administration (FRA) Class 9 Track Safety Standards. While these HST criteria are developed prior to the development of final track and systems design, the design approach is intended to comply with FRA Class 9 standards to result in appropriate infrastructure facilities for the HST trackway construction.

Each Geotechnical Designer shall be a licensed Geotechnical Engineer in the State of California with a minimum of 15 years of design and practical field experience in geotechnical and seismic engineering. For specialized structures, such as mined tunnels and aerial structures, additional experience requirements apply as described below.

Geotechnical Designers for underground structures (tunnels and trenches) shall have served as the geotechnical engineer of record for the design of at least 3 similar structures that have been constructed, each exceeding 20 feet in width or diameter and 5,000 feet in length. Geotechnical Designers for aerial structures shall have served as the geotechnical engineer of record for the design of at least 3 rail or highway bridge projects that have been constructed, each exceeding 1,000 feet in length.

The Geotechnical Designers shall conduct work necessary to perform supplemental geotechnical investigation and complete the design for the California High-Speed Train Project (CHSTP). The Geotechnical Designers shall develop geotechnical designs and construction excavation support systems in accordance with the requirements set forth in this chapter. Elements of the work include, but are not limited to, the following:

- Review of existing geotechnical information, including but not limited to the Geotechnical Baseline Report for Bidding (GBR-B), the preliminary Geotechnical Data Report (GDR), and the preliminary Geotechnical Engineering Design Report (GEDR).
- Evaluate the requirements of the work and perform additional geotechnical explorations, laboratory testing, and geotechnical analyses to supplement the existing data in support of final design and proposed means and method of construction.
- Perform additional field testing to characterize the in situ shear wave velocity (V_{s30}) profile and dynamic soil properties at Special Sites[1] along the project alignment. Shear wave velocity profiles and dynamic soil properties shall be obtained at the Special Sites[1]. Measurements of shear wave velocity, V_{s30}, shall be conducted via downhole PS seismic

[1] Special Sites are defined as locations subject to liquefaction or strong nonlinear site effects such as at water crossings including rivers, creeks, canals, etc., sites underlain by NEHRP site categories E and F, sites which are technically classified as Complex due to Complex Geological Conditions per the Seismic Chapter, and locations with underground structures such as tunnels, below grade stations, cut-and-cover structures, trenches, and below grade U-walls.

RFP No.: 13-57 – Addendum No. 5 - 10/09/2014

suspension logging to a maximum of 500 feet or until reference rock material (minimum V_{s30} of 2,500 ft/s) is encountered, whichever occurs first.

- Perform site specific site response analyses to develop final time series at the Special Sites using the site specific geotechnical data and using the response spectra and corresponding spectrally matched time series of the referenced rock outcrop motions developed by the Authority. Use the results for final design of the infrastructure systems at the Special Sites.
- Prepare final Geotechnical Data Report (GDR) and Geotechnical Engineering Design Report (GEDR), and Geotechnical Baseline Report for Construction (GBR-C) as stated herein.
- Perform professional engineering support for the final structural design and design of temporary support works.
- Perform construction inspection and provide construction support to the Contractor related to geotechnical related works

The Geotechnical Designers shall prepare the Geotechnical Reports in accordance with the criteria set forth in this chapter. Geotechnical work shall be conducted under the direction of the Geotechnical Designers. Geotechnical reports, calculations, and drawings shall be signed and stamped by the Geotechnical Designers. In addition, the Geotechnical Designers shall be responsible for the following:

- Overseeing geotechnical design and construction support of bridges, embankments, retaining walls, roadways, tunnels, underground stations, roadways, and other geotechnical related facilities
- Determining if more stringent criteria are appropriate and/or required by applicable codes or manuals (in addition to those listed). In situations where conflicts arise between these criteria and other applicable codes or manuals, the more stringent criteria will be used.
- Approving construction under their design control

Land subsidence is well documented in areas along portions of the proposed alignment. Consequently, the design and construction of the high-speed rail facilities shall consider the ongoing land subsidence conditions. Land subsidence shall be studied, analyzed, monitored, and mitigated to reduce its effect on the high-speed operations, passenger comfort, and long term serviceability. Groundwater pumping has been the primary factor responsible for land subsidence. Although halting or limiting the water pumping is an effective mitigation, it shall not be considered as a solution for this contract.

Refer to the scope of work in the contract documents regarding additional requirements for addressing land subsidence.

RFP No.: 13-57 – Addendum No. 5 - 10/09/2014

10.4 Subsurface Investigation and Data Analysis

The Geotechnical Designers shall interpret the existing geotechnical data and perform subsurface investigations, field and laboratory testing, fault displacement mapping, and rock slope mapping as may be necessary to satisfy themselves as to the nature of the following:

- Soil, rock, groundwater, and subsurface conditions including gassy or potentially gassy ground, if applicable
- The geologic and seismic hazards (e.g., faults, landslides, rockfall, debris flows, liquefaction, soft ground, swelling or collapsible soil, or otherwise unstable soil) within and in the immediate vicinity of the project site
- Variations in the subsurface and groundwater conditions across the project site and adjacent areas that can potentially impact construction activities or train operations (e.g., ground movements or high-speed train induced ground vibration)

Appendix 10.A – Guidelines for Geotechnical Investigations provides guidance for the expected level, frequency, and reporting of geotechnical investigation envisioned as necessary to fully satisfy the requirements of the Project.

Interpretations and necessary investigations and testing shall consider the methods of construction, critical combinations of loading, and other site-specific factors (e.g., drainage, issues, proximity of the alignment and structures to adjacent structures) that may impact final design, construction and operations.

In addition, the Geotechnical Designers shall undertake investigations and data review to assess the potential for adverse conditions posed by areas of soil and/or groundwater contamination, chemically aggressive soil conditions (e.g., high sulfate content), corrosive ground, and regions that may be impacted by stray electrical currents.

For locations where structures containing steel and/or concrete are intended, a site specific corrosion study shall be performed to evaluate corrosive characteristics of soil and groundwater that have negative impact to concrete and steel. In addition to stray currents, the ability of soils to conduct electricity may have a significant impact on the corrosion of buried structures and the design of grounding systems. Accordingly, subsurface investigations shall include conducting appropriate investigations to obtain soil resistivity values. The following criteria are required:

- Soil resistivity readings shall be obtained to evaluate the electric conduction potential of soils at (1) each traction power facility site (supply/paralleling/switching station), which are to be spaced at approximately 5-mile intervals, (2) major structures, such as aerial structures and freeway overpass bridges, and (3) tunnel portal areas.
- Where there is an absence of major structures between traction power facilities, soil resistivity readings shall be obtained to evaluate the electric conduction potential of soils at approximately the midpoint between facilities.

RFP No.: 13-57 – Addendum No. 5 - 10/09/2014

- Where significant differences in soil resistivity values are identified at adjacent locations, additional readings shall be obtained so that an adequate basis is developed for the grounding design.
- Resistivity measurements shall be obtained in accordance with the Institute of Electrical and Electronics Engineers (IEEE) Standard 81-1983 – IEEE Guide for Measuring Earth Resistivity using the four-point method for determining soil resistivity. IEEE states that the four-point method is more accurate than the two-point method.

A Geotechnical Investigation Plan (GIP) shall be prepared by the Geotechnical Designer to supplement and update existing subsurface information available for final design of the structures. The investigation shall follow *Appendix 10.A – Guidelines for Geotechnical Investigations.*

The plan shall include the criteria or rationale used in developing the plan and shall identify locations of explorations, together with their depths, sampling intervals, and a description of both the field methods and laboratory testing program utilized. In addition, the plan shall include a detailed description regarding the investigative methods which shall be optimized to make best use of cone penetration testing, soil/rock borings, monitoring wells and piezometers to efficiently characterize the subsurface conditions along the project alignment. This plan shall be submitted to the Authority for review and acceptance prior to commencing geotechnical investigations.

The requirements for the field and laboratory investigations to be performed by the Geotechnical Designers shall be the following:

- Perform additional subsurface investigations to supplement existing geotechnical data for the design of elements along the proposed alignment. Specific guidance on subsurface investigation methods that shall be considered for this project is presented in *Appendix 10.A – Guidelines for Geotechnical Investigations* of this chapter.
- Supervision – Boring and in situ testing and inspection, and laboratory classification and testing, shall be performed by a trained geologist or geotechnical engineer under the supervision of a geotechnical engineer or an engineering geologist licensed in California with a minimum of 10 years of experience in the performance and supervision of geotechnical investigations.
- Location and Ground Surface Elevation – The Geotechnical Designer shall determine the coordinate location and ground surface elevation for each boring and field investigation site, and shall show the coordinates, and station and offset, and the elevation for each individual boring log or investigation record. Coordinates, stationing and offsets shall be referenced to the Project horizontal control system. Elevations shall be referenced to the CHSTP datum.
- Laboratories shall be Caltrans certified and equipment used for field testing shall have documentation of calibration within the last year.

RFP No.: 13-57 – Addendum No. 5 - 10/09/2014

- Information obtained using a pocket penetrometer or field torvane shall not be relied upon as the primary means for development of geotechnical parameters.
- Soil samples and rock cores shall be kept and maintained in a readily accessible storage facility within 100 miles of the project site during construction. No disposal of the soil samples and rock cores shall be made until it is instructed by the Authority after completion of the project. These samples shall be available for viewing by the Authority or its designees within 2 business days of a request. Untested samples shall not be disposed of or released to a third party at any time without the written authorization of the Authority.
- For rock slopes, tunnels through rock, and rock excavations at the portals and substructures, oriented cores with down hole camera logging shall be performed to obtain structural geological parameters such as orientations (dip/strike), roughness, infilling, spacing, etc., of structural discontinuities (bedding, joints, fault zones, shear zones, breccias, etc.). At a minimum, detailed geologic information shall be collected to a depth of one tunnel diameter (D) below the invert of the tunnel.
- Borehole Site Cleanup – Backfilling of borings, test pits, Cone Penetration Tests (CPTs), rotosonic holes, wells, and probe holes shall be performed in accordance with the provisions of applicable local, state, or federal laws and regulations, and permit requirements. Restoration of pavement shall be performed in accordance with street use permit requirements.
- Test holes shall be backfilled in a manner that ensures against subsequent settlement or heave of the backfill. Upon completion of field investigations, surplus materials, temporary structures, and debris resulting from the drilling work performed on land and in water shall be removed and disposed of from the site.
- Final boring and rock core logs shall be prepared using gINT Geotechnical and Geo-environmental software.
- No geologic or hydrogeologic data or seismic hazard evaluation results shall be released to a third party without the written approval of the Authority.

10.5 Geotechnical Reports

Geotechnical reports including the GDR, GEDR, and GBR-C shall be prepared, signed, and stamped by the Geotechnical Designer. Preliminary documents such as GDR, GEDR, and the GBR-B have been provided to the Contractor to support the bidding process. The preliminary GDR presents the existing geotechnical data for the project. The preliminary GEDR, if available, presents the preliminary geotechnical design elements and analyses for the project and is based on the data included in the GDR. The GBR-B documents baseline subsurface conditions anticipated for the purpose of the bidding process (hence the suffix "B"). The Contractor will conduct additional subsurface investigations and develop the final design and construction documents. These final geotechnical reports include the Final GDR, containing all data collected for the project (preliminary data as well as that collected by the geotechnical designer); the Final

RFP No.: 13-57 – Addendum No. 5 - 10/09/2014

GEDR that documents the design assumptions, design process, geotechnical analyses and their results, and final design recommendations; and the GBR-C that will update the GBR-B based on new information obtained during the investigation period.

10.5.1 Geotechnical Data Report (GDR)

Geotechnical investigation of the subsurface conditions, including laboratory and field testing, shall be performed to describe the geologic features of the project area. A summary of geotechnical data and findings, including a summary of the preliminary design level investigation results along with the results of the final field subsurface investigations including mappings, if any, and laboratory testing data, shall be prepared as the GDR. The GDR shall contain factual information that has been gathered in the preliminary design of subsurface investigations and the final subsurface investigations. The GDR shall contain the following information:

- Project description
- Description of desk study results gathered from existing available data
- Description and discussion of the site exploration program
- Locations and results of subsurface investigations (borings, CPTs, Geophysical Testing, etc.) including photo documentation of core hole core samples and investigation sites
- A detailed description of geological and subsurface conditions (including a description of site stratigraphy, geologic hazards, and groundwater conditions)
- Rock parameters including orientation and nature of jointing, bedding, etc.
- Description of surface water (springs, streams, etc.) and groundwater conditions
- Seismic setting including location of nearby faults
- Boring and rock core logs with soil descriptions and field test results
- Groundwater level measurements from monitoring wells and piezometers
- Vibration propagation characteristics of soils including surface waves such as Rayleigh waves
- Ground movement measurements from inclinometers and others such as Global Positioning System (GPS), Interferometric Synthetic Aperture Radar (InSAR) methods, etc.
- Description and results of field/in situ testing and rock mapping
- Description and results of laboratory tests
- Material properties
- Chloride content, acidity (pH value) and sulfate content of the surface water, groundwater, and soils
- Statistical analysis for test results per geotechnical layer

RFP No.: 13-57 – Addendum No. 5 - 10/09/2014

- Results of field and laboratory testing
- Logs of borings, CPTs, seismic cones, trenches, and other site investigations
- Logs of geophysical testing including MASW, SASW, downhole PS seismic suspension logging, cross-hole logging, and others, etc.
- Standards for laboratory and field testing

10.5.2 Geotechnical Engineering Design Report (GEDR)[1]

The findings and evaluations of subsurface data along with geotechnical and foundation analyses and design recommendations shall be documented in the form of a GEDR[1], which serves as the basis for final geotechnical design. The GEDR shall include, but is not limited to, the following:

- Project description including surface conditions and current use
- Regional and site geology
- Regional and site seismicity
- A summary of subsurface explorations, including field and laboratory testing, and locations (map with coordinates) of borings, wells, and other in-situ testing sites
- Detailed description of geological and subsurface conditions (including a description of site stratigraphy) along with geological profile and cross-sections
- Seismic design criteria including design earthquakes (Operating Basis Earthquake [OBE] and Maximum Considered Earthquake [MCE]), magnitudes, and peak ground and bedrock accelerations, where applicable. Refer to the *Seismic* chapter for definitions of the design earthquakes
- Evaluation of seismic and geologic hazards including, but not limited to, liquefaction/lateral spreading, pre-historic landsliding and land subsidence due to long-term pumping of groundwater or withdrawal of petroleum and gas, if any
- Subsurface material properties
- Data and complete discussions of geotechnical analyses, designs, and studies
- Recommended design parameters for soil and rock types
- Conclusions and recommendations for foundation types for structures (with appropriate design parameters), soil and rock cut slopes, fill embankments, retaining walls, requirements for backfill materials

[1] GEDR is equivalent to design memoranda reference in Essex (2007) and the GBR framework

RFP No.: 13-57 – Addendum No. 5 - 10/09/2014

- Lateral earth pressures to be used in designing temporary and permanent excavation support structures
- Seismic earth pressure design considerations for embankments and structures
- Results of site specific site response analysis used for design of deep foundations and underground structures
- Potential groundwater impact and dewatering requirements
- Instrumentation and monitoring requirements during and after construction
- Potential settlement/horizontal deflection problems and mitigation measures
- Potential soil and rock slope and retaining wall stability problems and analysis results along with mitigation measures
- Impact of dynamic train loading on the ballasted tracks and/or non-ballasted tracks in terms of residual settlements on the foundation systems and subgrade soils
- Evaluate the impact of the ground vibration induced by high-speed train operations (i.e., Rayleigh wave) to proposed and existing infrastructures such as bridges, embankments, retaining walls, and underground structures, and carry out mitigations as necessary
- Anticipated ground behavior and categorization of ground during excavation, filling and foundation, and retaining structure construction; particular attention shall be paid to identifying and mitigating impacts due to excavating near the groundwater table.
- Blasting and excavation methods as related to the design of cut slopes, including a discussion of blast design parameters that are related to the geotechnical conditions
- Consideration for, discussion of, and rationale for protection of existing structures, water bodies, and environmentally or historically sensitive areas
- Discussion on induced vibration and noise from the selected construction equipment and procedures and the effects on adjacent structures and landowners
- Discussion on studies to evaluate and assess the impact of land subsidence to the performance of the HSR systems
- Evaluation of in situ stress conditions (if applicable)
- Evaluation of load bearing capacity of the encountered soil/rock types
- Stability analyses in agreement with applicable codes and standards
- Evaluation, if excavated material can be used as fill/backfill material
- Geotechnical recommendations including earthwork/sitework; ground stabilization for foundation support; stabilization of unstable soil and rock slopes; mitigation measures to reduce land subsidence; and foundation options for aerial structures, underground structures, retaining walls, hydraulic structures, and other structures

RFP No.: 13-57 – Addendum No. 5 - 10/09/2014

- Construction considerations given to issues related to construction staging, shoring needs, potential installation difficulties, temporary slopes, earthwork constructability issues, dewatering, etc.
- Long-term and construction monitoring and evaluation needs

10.5.3 Geotechnical Baseline Report for Construction (GBR-C)

A Geotechnical Baseline Report for Construction (GBR-C) shall be developed, upon completion of subsurface investigations, to summarize design assumptions and final design results developed in the GEDR, and also to document interpretations and baseline conditions anticipated for Construction. As part of the final design and construction planning process, the Geotechnical Designer shall interpret the various baselines expressed in the GBR-B, and consider those baselines in the development of the design and construction approaches. Based on the data collected and presented in the final GDR and the design process documented in the GEDR, Contractor will further develop and finalize the GBR-C by updating the GBR-B accordingly. An electronic version of the GBR-B shall be used to record modifications or clarifications in the "track changes" mode using a computerized word processing software program. In its completed form, the GBR-C will document the physical baselines established by the Authority and the Contractor as well as the behavioral baselines described by the Contractor consistent with its design approach, equipment, means and methods.

The GBR-C shall include, but is not limited to, the elements listed in the "Geotechnical Baseline Reports for Construction – Suggested Guidelines" prepared by ASCE (Essex, 2007). The GBR-C shall be limited to interpretive discussion and baseline statements, and shall make reference to information obtained in the Geotechnical Data Report (GDR), Geotechnical Baseline Report for Bidding (GBR-B), drawings, and specifications.

10.6 Bridge, Aerial Structure, and Grade Separation Foundations

Foundation design shall be based on project-specific information developed for the location(s) and foundation type planned. It shall be carried out in accordance with AASHTO LRFD BDS with California Amendments or other Standards or Codes referred to in Section 10.2 of this chapter provided that these are comparable and equivalent to or complement AASHTO LRFD BDS with California Amendments, and as described below. Some Primary Type 2 structures may also be subject to design criteria of local jurisdictions (e.g., UPRR, Metrolink, Caltrans, etc.). For Primary Type 2 structures that are subject to the jurisdiction of local authorities, soil parameters, such as design bearing and frictional values for foundations, shall not exceed the limits given by the applicable codes, except for deviations as provided for in the codes.

RFP No.: 13-57 – Addendum No. 5 - 10/09/2014

10.6.1 Geotechnical Data

The type and depth of foundations shall be determined from available geotechnical data and additional geotechnical investigations at the locations of the foundations. Use of assumed values shall not be allowed for final design.

Foundations to be constructed in rivers, canals, and creeks shall take into consideration flood levels and maximum scour depth as determined by the *Drainage* chapter.

10.6.2 Load Modifiers, Load Factors, Load Combinations, and Resistance Factors

The design shall be in accordance with the concepts and general methodology of AASHTO LRFD BDS with California Amendments. Refer to the *Structures* chapter for load factors and load combinations. Load resistance factors for walls and shafts shall be in accordance with AASHTO LRFD BDS with California Amendments.

10.6.3 Allowable Foundation Settlements for Primary Type 1 Structures

Requirements for foundation settlement performance presented herein shall supplement to (or apply in addition to) the criteria indicated in AASHTO LRFD BDS with California Amendments. Foundation settlements shall be calculated from the Service 1 load combination plus any irreversible settlements resulting from the post-earthquake effects of Operating Basis Earthquake (OBE) such as those resulting from liquefaction induced down drag, seismic compaction, etc. The settlements include components of short-term and long-term settlements as well as elastic (reversible) and plastic deformation (irreversible) from dynamic train loading, and shall not exceed the values shown in Table 10-1. Transient and temperature loads in the Service 1 load combination shall be used to calculate the short- term settlements. Traction and braking forces need not be considered.

Compliance with the settlement limits in Table 10-1 shall be applicable to settlements that occur after completion of construction and installation of all superimposed dead loads including the trackwork. For approach embankments, the settlements shall be measured at the top of the embankment.

Differential settlement limits in Table 10-1 are required to control the long term changes of track geometry within track maintainable tolerances.

RFP No.: 13-57 – Addendum No. 5 - 10/09/2014

Table 10-1: Maximum Allowable Settlement Limits [(4),(5)] for Service 1 and OBE Load Cases

Settlement Criteria	Non-Ballasted Track	Ballasted Track
Differential Settlement Between Adjacent Structure Supports[(1), (5)]	≤ L/1500 (L = smaller span in inches), but no greater than 3/4 inch	≤L/900 (L=smaller span in inches), but no greater than 1-1/4 inch
Differential Settlement Between Abutment and Approach Embankment [(2)]	≤ 1/1000, but no greater than 3/8 inch	≤1/500, but no greater than 3/4 inch
Differential Settlement Between Abutment and Tunnel Portal	≤ 1/1000, but no greater than 3/8 inch	N/A [(3)]
Uniform Settlement at Structure Supports	≤ ¾ inch	≤ 1-1/4 inch

Notes:

(1) The additional forces imposed on the structural system by differential settlements shall be calculated and considered as part of dead load in the design (refer to settlement effects (SE) in Structural chapter)

(2) Geostructures shall be instrumented and monitored for a period of at least 12 months following completion of the structure. The Geotechnical Designer shall demonstrate future compliance with the residual settlements (i.e., defined as settlements which are the sum of the remaining native foundation settlement and embankment consolidation settlement estimated to occur after 12 months of completion of embankment construction plus elastic and plastic deformations from dynamic train loading) by comparison of the monitored data and predicted settlement.

(3) Not applicable based on the assumption that ballasted track will not be used for tunnels.

(4) The settlements calculated from the Service 1 load combination plus any irreversible settlements resulting from the post effects of OBE (such as those resulting from post-liquefaction down drag, seismic compaction, etc.). For approach embankments and aerial structures, the Service 1 settlement limits and OBE load combinations are applicable to settlements that occur after completion of construction.

(5) For special conditions, such as a straddle bent adjacent to a single column bent, the allowable Differential Settlement between Adjacent Structure Supports as noted in this table will be reduced by the differential vertical deformations of substructures. Refer to the *Structures* chapter for information on these additional requirements.

Refer to the *Structures* chapter's section on Track-Structure Interaction for additional performance requirements for allowable deformations for the track.

No specific settlement limits are required for the Extreme Event Maximum Considered Earthquake (MCE) loading case, except that the structure shall not collapse and that foundation elements are capacity protected in accordance with the *Seismic* chapter.

10.6.4 Bridge, Aerial Structure, and Grade Separation Foundation Types

Bridge, aerial structure, and grade separation foundations shall be either shallow or deep foundations, depending upon the site specific conditions.

10.6.4.1 Shallow Foundations

Shallow foundations shall be spread footings, combined footings, or mat foundations. They shall be used where there is competent bearing layer near the surface, no highly compressible layers below, and calculated settlements are within the allowable limits outlined in this chapter.

RFP No.: 13-57 – Addendum No. 5 - 10/09/2014

Geotechnical design of abutment and bent/pier shallow foundations shall be carried out in accordance with AASHTO LRFD BDS with California Amendments Articles 10 and 11, and as supplemented in this chapter. Unless otherwise specified, refer to the *Structures* chapter for LRFD load factors and load combinations.

Geotechnical design of retaining wall shallow foundations shall be carried out in accordance with Section 10.8 of this chapter, AASHTO LRFD BDS with California Amendments Articles 10 and 11, and as supplemented in this chapter. Refer to the *Structures* chapter for LRFD load factors and load combinations and this chapter for additional 3 service load conditions.

A. Bearing of Soil/Rock

The nominal bearing resistance for shallow foundations shall be determined based on existing available geotechnical data and the geotechnical subsurface conditions of the foundation soil or rock. For all types of shallow soil foundations, the factored uniform bearing stress at the strength limit state, based on the effective footing dimension method in accordance with AASHTO LRFD BDS with California Amendments Articles 10.6.1.3 and 11.6.3.2, shall not be greater than the factored nominal bearing resistance. For all types of shallow rock foundations, the factored bearing stress at the strength limit state, based on the linearly distributed pressure method in accordance with AASHTO LRFD BDS with California Amendments Article 11.6.3.2, shall not be greater than the factored nominal bearing resistance.

For abutment shallow soil/rock foundations, the bearing stress at the Service 1 limit state, based on the linearly distributed pressure method, shall not be greater than the site specific nominal bearing resistance according to AASHTO LRFD BDS with California Amendments.

B. Stability

1. Under normal loading[1] conditions, the location of the resultant of reaction forces shall be within the middle one-third of the foundation width.

2. Under exceptional loads[2], the location of the resultant of reaction forces shall be within the middle one-half of the foundation width.

3. Under ultimate loads[3], the location of the resultant of the reaction forces shall be within the middle two-thirds of the foundation width. Over-strength plastic hinge demands from MCE shall apply.

---

[1] Normal Loads = DC + DW + L + CF + E + WA + LF_2 + 0.6TU

[2] Exceptional Loads = DC + DW + L_1 + CF_1 + LF_1 + E + WA + WS + WL_1

= DC + DW + L_1 + CF_1 + LF_1 + E + WA + OBE

[3] Ultimate Loads = DC + DW + E + WA (buoyancy only) + MCE

RFP No.: 13-57 – Addendum No. 5 - 10/09/2014

For loading definitions of cases 1, 2, and 3 noted above, refer to the *Structures* chapter and as summarized below:

DC	=	Dead load of structural components and permanent attachments
DW	=	Dead load of non-structural components and non-permanent attachments
CF	=	Centrifugal force (multiple trains)
CF_1	=	Centrifugal force (single train)
E	=	Earth pressures, including EV, EH, and ES
L	=	Multiple trains of LLRR or LLV, whichever governs
L1	=	Single train of LLRR or LLV, whichever governs
LF1	=	Braking forces (apply braking to 1 train) for LLV loading
LF2	=	Acceleration and braking forces (apply braking to 1 train, and acceleration to the other train) for LLV loading
MCE	=	Maximum Considered Earthquake (refer to the *Seismic* chapter)
OBE	=	Operating Basis Earthquake (refer to the *Seismic* chapter)
TU	=	Uniform temperature effects
WA	=	Water loads, including stream flow and buoyancy,
WS	=	Wind load on structure
WL_1	=	Wind load on 1 train

For Primary Type 1 and Complex Structures bridge, aerial structures, or grade separations, a design strategy based on transient foundation uplift or foundation rocking as described in the *Seismic* chapter is not permitted.

C. Allowable Foundation Settlements

Settlements and differential settlements of shallow foundations under the service limit state shall not exceed those specified in Table 10-1. Refer to the *Structures* chapter for service limit state load combinations.

D. Benching

Where footings are to be constructed on inclined surfaces with slopes greater than 1 Vertical: 10 Horizontal (1V:10H), the surface shall be benched (Section 10.9.4).

E. Bottom of Footings

The depth of footings shall be determined based on the characteristics of the foundation materials and in consideration of the possibility of undermining. Footings not exposed to the action of a stream or river current shall be founded such that the top of the footing has a minimum depth of 3 feet below the lowest adjacent finished grade. In areas susceptible to frost development, footings shall be placed on a firm foundation below the frost level, or on a firm foundation that is made frost resistant by over excavation of frost-susceptible material below the frost line and replaced with material that is not frost susceptible, or such that the top of the footing is at least 3 feet below the surface, whichever is deeper. In locations where expansive or

RFP No.: 13-57 – Addendum No. 5 - 10/09/2014

collapsible soils are present, deleterious soils should be over excavated and replaced with suitable foundation material or footings shall be placed at a depth sufficient to eliminate impacts from swelling or collapsible soils.

In cases where spread footings are used in streams and rivers, the following additional design requirements shall be considered:

- **Footings on Soils** – The bottom of footings on soils shall be set at least 10 feet below the river bottom unless otherwise stated in this chapter. The potential shift of the stream or river channel shall be considered when determining the channel bottom. The top of footings shall be below the total scour depth determined for the 100-year flood, and the bottom of footings shall be below the total depth determined for the 500-year flood.
- **Footings on Rock** –The bottom of footings shall be at least 3 feet below the surface of scour-resistant rock (i.e., rock not subject to scour attack) with the top of the footings at least below the rock surface.
- **Footings on Erodible Rock** – The foundation design of footings on erodible rock shall be based on the following:
  - Assess weathered rock or other potentially erodible rock formations for scour.
  - An analysis of intact rock cores, including rock quality designations and local geology, hydraulic data, and anticipated structure life.

10.6.4.2 Deep Foundations

Deep foundations shall be bored or driven piles, or Cast-in-Drilled-Hole (CIDH) piles (also known as drilled shafts). These shall be used when shallow foundations cannot be used to carry the applied loads safely and economically while also meeting the required settlement criteria. Alternative deep foundation systems such as micropiles, rammed aggregate piers, augercast piles, and propriety systems shall not be allowed for support of bridges, aerial structures, or grade separations.

The top of deep foundations, including top of drilled shafts or pile caps where multiple shafts or piles are employed, shall be a minimum of 3 feet below the lowest adjacent finished grade.

A. <u>Ultimate Pile Load Capacities</u>

The ultimate pile axial capacity shall be determined based on appropriate values of skin friction plus end bearing developed from the results of site-specific geotechnical investigations, and shall be verified by test piles and load testing as described herein.

The adequacy of the bearing capacity of the drilled shafts and bore or driven piles shall be verified regarding (1) the factual soil parameters at the respective locations and depth of the foundations, and (2) the groundwater table. Refer to Section 10.6.4.3 on Test Piles and Load Tests for verification of assumptions for deep foundation design.

RFP No.: 13-57 – Addendum No. 5 - 10/09/2014

Pile foundations shall be designed in such a way that plastic hinges are not located in the piles or drilled shafts. If below-ground plastic hinging of the piles or drilled shafts is unavoidable, then a design variance shall be submitted per the *General* chapter. In cases where plastic hinges are a necessary part of the design, the design shall include an inspection protocol that does not require excavation to inspect the pile condition.

B. Settlements

Settlements of deep foundations shall not exceed those specified in Table 10-1. Design settlement values shall be verified with appropriate calculations in the design process. Piles/drilled shafts and connections to pile caps shall be checked for the estimated deflection from lateral loads.

For deep foundations where soils exhibiting potential liquefaction and lateral spreading in an earthquake are present, ground improvement may be considered to improve the foundation stability. Where ground improvement measures alone are prohibitively costly and impractical, consideration shall be given to designing a combined system composed of improved ground and strengthening of the foundation.

C. Lateral Load Capacity

Piles and drilled shafts shall be designed to adequately resist lateral loads transferred to them from the structure without exceeding the deformation which creates a stress outside the allowable stress range of the structure or overstressing the foundation elements. The lateral load resistance of the individual and groups of piles and drilled shafts shall be analyzed. The analysis shall consider nonlinear soil pressure-displacement relationships, soil-structure interaction, group action, groundwater, and static and dynamic load conditions. The performance of the piles and drilled shafts shall include determination of settlements and horizontal deformations, rotation, axial loads, shear, and bending moment for the foundation elements.

The lateral load capacity of piles and drilled shafts shall be verified by means of pile load tests in the field as described in Section 10.6.4.3 Test Piles and Load Tests.

D. Wave Equation Analyses

The constructability of a pile design and the development of pile driving criteria shall be performed using a Wave Equation Analysis for Piles (WEAP) computer program in accordance with AASHTO Standard Specifications for Highway Bridges. Analysis shall be conducted for hammers and pile types proposed for use and for each bridge foundation. Wave equation analysis shall not be used as the sole basis for determining pile capacity or pile acceptance.

E. Pile Group Effects

Generally for piles or drilled shafts constructed in groups, the spacing of pile centers shall not be less than 2.5 times the pile diameters (or pile size). Piles or drilled shafts in any 1 group shall be of the same diameter. Pile group effects shall be considered with regard to the bearing capacity, settlement, and lateral resistance.

RFP No.: 13-57 – Addendum No. 5 - 10/09/2014

Multiple rows of piles/drilled shafts often have less resistance than the sum of the single individual piles/drilled shafts because of pile-soil-pile interactions that take place in the pile group (also called shadowing effect). The shadowing effect can cause the lateral capacity of the pile group being less than the sum of the lateral capacities of the individual piles comprising the group. Consequently, lateral loaded pile groups often will have group efficiencies less than unity, depending on the pile spacing.

Accordingly, when the P-Y method of analysis is used to evaluate a laterally loaded pile group, reduce the values of P by a multiplier (P_m) as shown in Table 10-2.

Table 10-2: Pile Load Modifiers, P_m, for Multiple Row Shading

Pile Center-to-Center Spacing (in direction of loading)	Pile Load Modifiers, P_m		
	Row 1	Row 2	Row 3 and Higher
3D	0.75	0.55	0.40
5D	1.0	0.85	0.7
7D	1.0	1.0	0.90

F. Down Drag (Negative Skin Friction) Effects

The design of piles and drilled shafts shall take into consideration the effect of negative skin friction as induced by dewatering, liquefaction, construction of embankments, or from pile installation methods. When down drag (negative skin friction) is considered, it shall be treated as an addition to the nominal loads.

The nominal pile resistance available to support the down drag and nominal loads shall be estimated by considering only the positive side and tip resistance below the lowest layer contributing to down drag (i.e., neutral plane[1]). The structure shall also be designed to meet settlement limits resulting from down drag and the applied loads and the structural limits resulting from the combination of down drag plus structure loads.

As noted by Fellenius (2004 and 2006), down drag increases the load developed in the pile at the neutral plane, and thus it is a structural capacity issue for pile design. For soil capacity calculations for pile design, the down drag load does not need to be included for most cases because when the pile is punching into the soil, all of the soil deposit resists the downward pile movement at the ultimate pile load. However, down drag loading should be considered when the soil below the neutral plane is subject to creep deformation or creep rupture.

[1] Neutral plane is the location where the downward acting forces are equal to the upward acting forces and where there is no movement between the pile and the soil. At this location, the pile and the soil settle equally.

RFP No.: 13-57 – Addendum No. 5 - 10/09/2014

In the case of soil liquefaction, the effects of soil liquefaction in soil above the neutral plane will be negligible if the dynamic loads do not raise the neutral plane significantly. The soil above the neutral plane has already loaded the pile downward under working loads. The loss of soil strength due to liquefaction in soils above the neutral plane does not change this loading, so the resulting effects are inconsequential. Observations following earthquakes indicate that pile foundations with their neutral plane well below liquefiable layers do not settle significantly (although one must always check that the dynamic loading does not push the neutral plane up into the liquefiable soils and that the bearing soil/rock materials below the neutral plane are sufficiently stiff and strong to resist dynamic loads). Methods proposed by Fellenius and Siegel (2008) should be used for evaluating down drag in deep foundations in liquefiable soils. In developing pile designs, care shall be taken to incorporate appropriate considerations for designs of drilled and/or driven pile installations. Driven piles develop residual stresses so that the neutral plane is located at depth under working loads. Drilled shafts transfer load to the soil from the top-down, so that under working loads the shaft may be providing all required resistance and the neutral plane is likely at the ground surface. For these cases, drilled shafts may settle significantly if the soil along its shaft softens significantly, such as due to soil liquefaction.

If measures are proposed for reducing the effect of negative skin friction by means of a slip coating (e.g., bitumen, geotextile coating, etc.), then consideration shall be given to the long term value of residual negative skin friction that may develop. Instrumented pile load tests and dynamic tests shall be undertaken to verify design assumptions and to estimate the available nominal resistance to withstand the down drag plus the nominal loads.

G. Uplift

Friction piles may be designed to resist uplift in non-liquefiable soils in accordance with recommendations in the GEDR. Resistance factors are per AASHTO LRFD BDS with California Amendments.

Should any loading or combination of loadings produce uplift on any pile, the pile to pile cap or pile to invert slab connection or footing shall be designed to resist uplift forces and other tension zones caused by the uplift condition.

H. Scour

For design of deep foundations to support bridges, aerial structures, or grade separations, in addition to analyses for current site conditions, geotechnical analyses shall be performed assuming that the soil above the estimated scour line based on the 100-year flood has been removed and is not available for bearing or lateral support.

RFP No.: 13-57 – Addendum No. 5 - 10/09/2014

10.6.4.3 Test Piles and Load Tests

A. Indicator Piles/Test Piles, Method Test Shafts, and Load Test Shafts

An adequate number of indicator piles[1], test piles[2] and method test shafts[3]/load test shafts[4] shall be specified as described below. These shall include advanced test piles/shafts tested to ultimate load to verify design assumptions. The locations and length of the indicator/test piles and method shafts/load test shafts shall be shown on the plans. Indicator piles/test piles and method test shaft/load test shafts shall be located to cover conditions of pile type, sizes, pile/shaft capacity, and soil conditions that will be encountered. Test piles that pass the load test in an undamaged condition may be utilized as production piles in the work. However, method test shafts/load test shafts shall be considered sacrificial and shall not be used as production drilled shafts.

As a minimum, indicator piles, test piles, and method test shafts shall be located according to the following criteria:

- One indicator pile and 1 test pile per 300 driven piles
- One indicator pile and 1 test pile at each pile location separated by a distance of 500 feet or less from other indicator pile/test pile locations
- One method test shaft per 50 drilled shafts
- One method test shaft and 1 load test shaft at each shaft location separated by a distance of 500 feet or less from other method test shaft/load test locations
- Test programs as indicated elsewhere in this chapter

B. Load Tests

An appropriate number of deep foundations (driven piles and drilled shafts) shall be tested to ultimate or design loads to verify design assumptions. The location and length of the test deep foundations shall be such that they will cover conditions of types and capacity of the deep foundations as well as soil conditions that will be encountered. These load tests shall be conducted on test piles, method test shafts, and production piles/drilled shafts.

---

[1] Indicator Pile – An individual pile that is tested and observed to determine its behavior during driving.

[2] Test Pile – An individual pile that is tested and observed under static axial compressive or tension load, under lateral load, and under dynamic load tests.

[3] Method Test Shaft – A drilled shaft that is excavated to verify construction methods so that drilling and support of excavation can be evaluated for each site.

[4] Load Test Shaft – A method test shaft with reinforcing placed, any casing or other excavation support system withdrawn, and full concrete placement, followed by gamma ray testing or crosshole sonic testing to verify concrete placement. Method test shaft is then observed under static axial compressive or tension load, under lateral load and under dynamic load tests.

RFP No.: 13-57 – Addendum No. 5 - 10/09/2014

Load tests, if conducted, may be used to increase the resistance factor that is specified in AASHTO Standard Specifications for Highway Bridges. Loading test methods shall be in accordance with the technical specifications applicable to the Contract. In general, static load test capacity of piles shall be tested for compressive, lateral, and tensile loads in accordance with the following ASTM International Standards:

- ASTM D1143, Test Method for Deep Foundations Under Static Axial Compressive Load
- ASTM D3966, Test Method for Deep Foundations Under Lateral Load
- ASTM D3689, Test Method for Deep Foundations Under Static Tensile Load

Alternative load test methods such as Standard Test Method for High Strain Dynamic Testing of Piles (ASTM D4945), Osterberg Cells, Statnamic Load Test (ASTM D7383), etc., may be used. However, these substitutive test methods shall be verified by a conventional loading test of similar piles or drilled shafts.

Drilled Shafts – An adequate number of load tests shall be performed in the following sections. These shall include Load Test Shafts tested to ultimate load (load tests) to verify design assumptions. The locations and length of the test shafts shall be shown on the plans. Method test shafts shall be located to cover the shaft type, shaft capacity, and soil conditions that will be encountered.

The Geotechnical Designer shall perform a test shaft program consisting of method test shafts to (1) confirm adequacy of drilling methodology and equipment, and (2) load tests to verify compressive, lateral, and tensile load capacities per site as described below. A location is considered to be a different site if any of the following are true:

- The location is more than 2,000 feet from the method test shaft location where the subsurface conditions are similar.
- The geologic character of the predominantly bearing formation and side resistance is different.
- At each of the main piers of a long span (more than 300 feet) bridge where there are a large number of drilled shafts (greater than 8) in each pier foundation, particularly where the geology may differ on either side of a natural drainage feature.
- The average calibrated resistance (unit load transfer in side resistance or end bearing) in the zone providing the majority of the axial resistance varies from the test location by a factor of 2 or more.
- Sequence, type of construction, and type of shafts are changed.

Once approval has been given to constructing production drilled shafts, no change shall be permitted in the methods and equipment used to construct the satisfactory method test shaft without production of additional method test shafts and written approval of the Geotechnical Designer.

RFP No.: 13-57 – Addendum No. 5 - 10/09/2014

Driven Piles – An indicator pile program consisting of indicator piles, test piles, and load tests shall be conducted at each bridge, aerial structure, or grade separation site where driven piles are to be installed. Perform dynamic monitoring using a Pile Driving Analyzer (PDA) on indicator piles conforming to the requirements of ASTM D4945. Perform static load tests to verify compressive, lateral, and tensile loads of individual piles. Indicator piles may be installed as production piles provided PDA test results demonstrate the required capacity is achieved.

To utilize the increase in capacity due to setup in cohesive soils, PDA measurements shall be recorded using Case Pile Wave Analysis Program (CAPWAP) during restrike of piles to evaluate setup. PDA results and revised criteria for the restrike shall be applied to only the piles in that group. Piles shall be re-struck no sooner than 48 hours after installation.

The Engineer inspecting the PDA testing shall have at least 5 years of experience in the monitoring of the driving of piles with PDA and in performing analyses with CAPWAP in similar type of soil conditions. The Engineer performing PDA related analyses shall be a geotechnical engineer licensed in the State of California.

The Geotechnical Designer shall be on-site during PDA testing of initial and restrike pile installation. The Geotechnical Designer shall evaluate data to establish driving criteria for production pile installation.

C. Integrity Testing

Integrity testing consisting of gamma-gamma or Crosshole Sonic Logging (CSL) or both shall be performed on drilled shafts larger than 24 inches in diameter. Gamma-gamma and CSL tests shall be reviewed and approved by the Geotechnical Designer as well as any remedial measures or repairs that may be needed. In addition, integrity testing is required on driven piles. ASTM D5882, Test Method for Low Strain Impact Integrity Testing shall be performed on piles and drilled shafts 24 inches in diameter or more.

10.6.5 Other Design Considerations

10.6.5.1 Foundation Cover

Soil cover over top of foundations of piers or abutments shall have a minimum thickness of 3 feet. In addition, for foundations in and adjacent to rivers and creeks, the soil cover over the foundation top for deep foundations shall be at least 3 feet below the maximum estimated scour depth, and at least 10 feet below the river/creek bottom and a minimum of 3 feet below the maximum estimated scour depth for shallow foundations supported by soils.

In urban areas and adjacent to highways, railroads, transit systems, the elevation at the top of the foundations shall be in compliance with the requirements set forth by the local authorities to allow for adequate depth for utilities and surface drains.

RFP No.: 13-57 – Addendum No. 5 - 10/09/2014

10.6.5.2 Foundation Rocking

For Primary Type 2 and Secondary structures, if foundation rocking is the preferred design approach, then it will also be limited to cases where the subsoil is not susceptible to loss of strength under cyclic loading, and the footing can be considered to be supported on a rigid perfectly plastic soil with adequate, uniform compressive capacity, q_n which is defined as nominal bearing capacity of supporting soil or rock (refer to 10.6.4.1A).

10.6.5.3 Foundation Thickness

Spread footings for piers and abutments shall have a minimum thickness of 3 feet.

The thickness of a pile cap shall be the larger of 3.5 feet or the depth required to develop the full compressive, tensile, flexural, and shear capacity of the pile reinforcement.

10.6.5.4 Piles/Drilled Shafts

Minimum penetration depth of piles and drilled shafts into competent bearing soils shall be 10 feet. In the event that the piles and drilled shafts are embedded in rock, the minimum penetration depth shall vary between 3 feet to 10 feet, varying linearly with the unconfined compressive strength of the rock as follows:

Table 10-3: Minimum Penetration Depth in Rock

Rock Unconfined Compressive Strength (psi)	Embedded Depth (feet)
< 75	10
≥ 750	3

End bearing soil below the pile/drilled shaft tip shall be competent materials, having a thickness of at least 3 x D (where D is either the pile diameter or drilled shaft width) and shall demonstrate the adequacy of resisting punching shear failure and settlements.

10.7 Station and Miscellaneous At-Grade Structures

10.7.1 Shallow Foundations

Per AASHTO LRFD BDS with California Amendments Article 10.2 Definitions): "Shallow Foundation – A foundation that derives its support by transferring load directly to the soil or rock at shallow depth."

Design of shallow foundations, e.g., spread and strip footings in addition to mat foundations, shall be based on site-specific information. Soil and rock engineering properties shall be based on the results of field investigations as presented in the Geotechnical Data Report; use of assumed values shall not be allowed. Designs of shallow foundations supporting rail structures or attached appurtenances shall be as required in AASHTO LRFD BDS with California Amendments Article 10.6, and in accordance with FHWA-SA-02-054 (Geotechnical Engineering

RFP No.: 13-57 – Addendum No. 5 - 10/09/2014

Circular No. 6 Shallow Foundations). Shallow foundations for support of structures under the purview of the California Building Code (CBC), buildings not directly supported off the aerial trackway structure, shall be designed in conformance with the requirements of the California Building Code (CBC) – Footings and Foundations. Shallow foundations shall have a minimum ground cover of 3 feet as measured from the top of footing to finished grade.

As these structures are distinct from bridges, aerial structures, and grade separations addressed in Section 10.6.4, shallow foundations shall be designed to limit total settlement (defined as vertical downward deformation of the shallow foundations for their design life) to no more than 1-inch. Differential settlements shall not exceed either 1/2-inch between adjacent supports or the ratio of the amount of settlement between adjacent supports divided by the distance between the supports (in consistent units) shall be no greater than 1/500, whichever is less.

10.7.2 Deep Foundations

Where shallow foundations cannot be used due to presence of soft, compressible soils, deep foundations such as piling can be considered. Design of deep foundations shall be in accordance with AASHTO LRFD BDS with California Amendments. Differential settlements between adjacent supports and the total settlement shall be the same as those stated for shallow foundations in 10.7.1 above.

10.7.3 Miscellaneous At-Grade Structure Foundations

Design of foundations for miscellaneous structures shall be in accordance with the requirements above for shallow foundations, excepting that presumptive values may be used. These include, but are not limited to miscellaneous structures such as light standards, retaining walls less than 5 feet in height and are not supporting any structures, and other lightly loaded and uninhabited structures. These miscellaneous structures shall be limited to those where settlements are not critical to their service performance.

Cantilever signs and signals shall be supported on drilled shaft foundations. Design for cantilever signals and signs shall be performed in accordance with the AASHTO Standard Specifications for Structural Supports for Highway Signs, Luminaires, and Traffic Signals. Seismic issues related to foundation design such as down drag and lateral spread due to liquefaction shall be addressed as stated in this chapter.

Foundation design for noise barriers shall be conducted in accordance with Caltrans Memo to Designer 22-1, Soundwall Design Criteria. Seismic issues related to foundation design such as down drag and lateral spread due to liquefaction shall be addressed as stated in this chapter.

10.8 Retaining Walls and Trenches

The criteria set forth in this section govern the static/seismic load design of retaining walls and trenches (retaining walls with a continuous base slab between them). The design shall conform

RFP No.: 13-57 – Addendum No. 5 - 10/09/2014

to the applicable requirements set forth in AASHTO LRFD BDS with California Amendments Article 11, FHWA Earth Retaining Structures Manual, and the sections specified in this chapter. For permanent surcharge loads, refer to Section 10.12.5. For design loads of the HST, refer to the *Structures* chapter.

Retaining walls can be classified as either a "fill wall" or a "cut wall." Acceptable fill walls include standard reinforced concrete cantilever walls, mechanically stabilized earth walls, reinforced soil slope embankment, and modular gravity walls (gabions and crib walls). Acceptable cut walls include soil nail walls, cantilever soldier-pile walls, slurry walls, secant pile/tangent pile walls, and ground anchored walls (other than nail walls).

10.8.1 Design

Design of retaining walls shall consider the following conditions of external instability where applicable:

- Sliding in connection with a horizontal displacement of the structure
- Overturning or excessive settlement
- Failure of the structure base (allowable soil pressure exceeded)
- Overall stability behind and under the structure (soil shear failure)
- Liquefaction potential of the supporting ground

For geotechnical design, refer to AASHTO LRFD BDS with California Amendments Article 11 and additional seismic criteria specified in the *Structures* chapter.

Design of mechanically stabilized earth structures and reinforced soil slope embankments shall also be in accordance with the LRFD version of FHWA's manual FHWA-NHI-10-024/25 "Design and Construction of Mechanically Stabilized Earth (MSE) Walls and Reinforced Soil Slopes", Volumes 1 and 2. Embedded metallic strip reinforcing elements, if used, shall meet the requirements of corrosion protection as set forth in the *Corrosion Control* chapter. Design of retained fill shall accommodate future Overhead Contact System (OCS) pole foundations. Refer to the *Structures* chapter for design criteria of the OCS pole foundations over retaining walls.

For MSE walls with metallic strips or wire meshes, a minimum of five (5) retrieval test strips or wire meshes shall be installed and retrieved for corrosion evaluation. The test strips or wires shall be retrieved for inspection in 5, 10, 20, 30, and 50 years after completion of the wall. Details of these retrieval strips and wire meshes shall follow those called out by standard Caltrans drawings and guidelines or as recommended by the MSE wall suppliers.

10.8.2 Unacceptable Walls

Unacceptable retaining walls include mortar rubble gravity walls, timber or metal bin walls, "rockery" or masonry walls, and other wall types not specifically listed in Section 10.8.

RFP No.: 13-57 – Addendum No. 5 - 10/09/2014

10.8.3 Stability of Retaining Walls

Retaining walls, abutment walls, and basement walls shall be evaluated and designed for internal, external (sliding and overturning), and global stability. In addition to the static loads, the retaining walls shall be designed to resist the dynamic (seismic) earth pressure (ED), hydrodynamic force (WAD) and hydrostatic pressure (water pressure), if submerged or below the groundwater table, under the seismic loading conditions.

Except for abutment walls where they shall be designed using the Service-1 Limit State loads, geotechnical designs for retaining walls and basement walls shall be performed in accordance with AASHTO LRFD BDS with California Amendments. Earth pressures used in design of the walls and abutments shall be selected consistent with the requirement that the wall/abutment movements shall not exceed tolerable displacement and settlement set forth in this chapter.

10.8.3.1 Unrestrained retaining walls

Retaining walls with level backfill that are not restrained from rotation at the top, which are located where Peak Ground Acceleration (PGA) values (i.e., from MCE ground motion) are less than or equal to 0.30g, shall be designed for only active pressures, surcharge loads, other static loads and bearing as appropriate, and inertial forces of the wall itself; additional dynamic (seismic) earth pressures need not be considered.

The no-seismic-load options mentioned above shall be limited to internal and external seismic stability design of the retaining wall for level backfills. For sloping backfill, the no-seismic-load options shall be correspondingly 0.2g for 3H:1V and 0.1g for 2H:1V. All these no-seismic-load options shall be applicable to the condition that no liquefaction and no severe strength loss in sensitive clays occur that can cause wall instability. If the wall is part of a bigger slope, overall seismic stability of the wall and slope combination shall still be evaluated.

For walls with cohesionless backfill and located in areas where PGA values are expected to be greater than 0.30g, seismic active pressures shall be included in the stability analysis. Seismic earth pressures shall be estimated using the Generalized Limit Equilibrium (GLE) Method or Mononobe-Okabe (M-O) Method (Mononobe and Matsuo, 1929). Furthermore, the M-O Method should be used only under the following conditions:

- The material behind the wall can be reasonably approximated as a uniform, cohesionless soil within a zone defined by a 3H:1V wedge from the heel of the wall.
- The backfill is not saturated or in loose enough condition such that it can liquefy during shaking.
- The combination of horizontal acceleration coefficient (K_h) and vertical acceleration coefficient (K_v) and backslope angle, *i*, do not exceed the friction angle of the soil behind the wall as specified by:

$$\emptyset \geq i + \arctan\left(K_h/(1-K_v)\right)$$

RFP No.: 13-57 – Addendum No. 5 - 10/09/2014

For wall geometry, seismic acceleration level, or site conditions for which the M-O Method is not suitable, the Generalized Limit Equilibrium (GLE) Method shall be used to determine seismic active earth pressures.

The horizontal acceleration coefficient (K_h) shall be the horizontal seismic coefficient as estimated by using the Bray et al. (2010) method assuming a wall movement of 1 inch for OBE case for retaining walls with level granular backfill. The total earth pressure (active and seismic) shall be of triangular distribution with its resultant acting at 0.33H from the bottom for routine walls (defined as walls that function independently of other systems or structures). For walls that have a critical function and act as part of an overall structure or system such as walls used as part of bridge abutments or part of tunnel portals, the earth pressures shall be separated into the incremental seismic pressures and the active earth pressures in the following manner:

$$\Delta K_{AE} = K_{AE} - K_A$$

Where:

ΔK_{AE} = Incremental seismic pressure coefficient

K_{AE} = Total seismic pressure coefficient

K_A = Active pressure coefficient

In addition, for walls that have a critical function and act as part of an overall structure or system such as walls used as part of bridge abutments or part of tunnel portals, the incremental dynamic (seismic) earth pressure shall be taken as a triangular distribution with the resultant acting at 0.67H from the bottom (i.e., an inverted triangle). This pressure shall be added to the active earth pressure for the design of the walls.

For walls that retain cohesive soils, the seismic demand may be reduced for retaining wall design (Anderson et al., 2008). For walls with sloping grades, the seismic demand on the wall generally increases and this increase should also be considered in those cases (Anderson et al., 2008). For design of retaining wall with cohesive retained soils or where native soils have a clear cohesive strength component, some effects of the cohesion in the determination of the seismic coefficient can be assumed. However, if the cohesion in the soil behind the wall results primarily from capillary stresses, especially in relatively low fines content soils, no cohesion can be allowed when estimating seismic earth pressure. Unless otherwise stated in this chapter, methods presented in Chapter 7 of the NCHRP Report 611 shall be used for backfill materials consisting of cohesive or cohesive and frictional (c-ϕ) material.

10.8.3.2 Restrained or Non-yielding Walls

For basement walls (i.e., non-yielding or walls restrained against rotation) with level backfill in locations where PGA values (for MCE ground motion) are less than or equal to 0.3g, walls shall be designed for only at-rest pressures, surcharge loads, other static loads and bearing as appropriate, and inertial forces from the wall itself, but additional seismic loads shall not be

RFP No.: 13-57 – Addendum No. 5 - 10/09/2014

considered. For higher PGA values, the higher of the at-rest pressures or the active plus M-O pressures shall be used for the design.

As mentioned above, walls that retain cohesive soils reduce the seismic demand, while the sloping grades behind walls increase the seismic demand required for retaining wall design (Anderson et al., 2008). For design of retaining wall with cohesive retained soils, or where native soils have a clear cohesive strength component, refer to section 10.8.3.1 above for design of the walls.

The no-seismic-load options mentioned above shall be limited to internal and external seismic stability design of the retaining wall for level backfills. For sloping backfill, the no-seismic-load options shall be correspondingly 0.2g for 3H:1V and 0.1g for 2H:1V. All these no-seismic-load options shall be applicable to the condition that no liquefaction and no severe strength loss in sensitive clays occur that can cause wall instability. If the wall is part of a bigger slope, overall seismic stability of the wall and slope combination shall still be evaluated.

10.8.4 Base Pressure

Soil bearing pressures shall be determined based on the applicable backfilled or native bearing materials. In order to minimize differential settlement and excessive outward tilting of walls, walls shall be proportioned so that the base pressure on soil under the footing is as nearly uniform (within 10 percent) as practical under the design load conditions.

10.8.5 Hydrostatic Pressure (Buoyancy)

Refer to the *Structures* chapter for design criteria for water loads (hydrostatic pressure) (buoyancy).

The use of tiedowns, tension piles, or other elements specifically designed to resist uplift forces shall be permitted. The use of augercast piles shall not be allowed as an anti-buoyancy hold down structure. The use of tension elements to resist buoyancy shall not compromise waterproofing and shall be designed to prohibit corrosion and be designed with the same design life as the rest of the structure.

10.8.6 Settlements and Horizontal Deformations

Retaining walls directly supporting HSTs, Primary Type 1, shall be designed not to exceed those residual settlement limits shown in Table 10-1 and Table 10-5 and horizontal deformation of 1/2 inch for service 1 and OBE load cases. These settlement and horizontal deformation limits apply after the structure enters service. For Type 2 and Secondary walls, refer to AASHTO LRFD BDS with California Amendments.

To avoid long-term deflections in the track, track structures (ballasted and non-ballasted) shall not be constructed until the majority (i.e., 75 percent) of estimated retaining wall settlement has already occurred. Use of ground improvement methods may be required to expedite settlement,

RFP No.: 13-57 – Addendum No. 5 - 10/09/2014

mitigate lateral deformations, as well as potential seismic hazards such as liquefaction and seismic instability. For loading associated with the MCE load, the settlement limits shall be evaluated and specified by the structural engineer (wall designer) who will ensure that no collapse criterion applies.

10.8.7 Drainage

Adequate drainage behind retaining walls shall be included in the design and implemented during construction. An exception to this requirement is for trenches and underground structure walls where the top of trackway subgrade is below the groundwater table/flood level. These walls shall be designed to resist full hydrostatic pressures, both laterally and vertically (buoyancy).

10.8.8 Backfill

Backfill behind retaining walls shall be cohesionless and drained. Drainage systems shall be designed to completely drain the entire retained soil volume behind the retaining wall face. If drainage cannot be provided due to site constraints, the abutment or wall shall be designed for loads due to full hydrostatic pressure in addition to earth pressures.

The compaction of the backfill shall meet a minimum of 95 percent degree of compaction using the Modified Proctor Test in accordance with ASTM (D-1557) or AASHTO T180. Care shall be taken not to damage the walls during compaction using light compactor or hand-held tamper.

10.9 Embankments and At-Grade Earthen Structures for HST Trackway (Primary Type 1)

For roadway and site embankments, refer to the *Civil* chapter. For design loads, refer to the *Structures* chapter.

Embankments and at-grade earthen structures shall be engineered. Design of embankments and at-grade earthen structures shall focus on settlement of support ground and stability of embankment and at-grade earthen structures. Care shall be taken to avoid possible landslides within the embankment and at-grade earthen structure areas.

At each embankment or at-grade earthen structure, the following shall be evaluated:

- Slope stability
- Liquefaction potential of support ground
- Bearing capacity and plastic flow evaluation
- Construction of embankment shall not lead to reactivation of existing landslides or the formation of new ones
- Creep considerations

RFP No.: 13-57 – Addendum No. 5 - 10/09/2014

- Drainage considerations to avoid eroding the slope, scouring the toe, adversely increasing pore-water pressures in the vicinity of the structure, and clogging the water course
- Impact of Rayleigh-wave vibration induced by the high-speed train on the track-ground system composed of ballast/subballast or non-ballasted track, embankment fill, supporting subgrades, and adjacent structures
- Assessment of prepared subgrade, subballast/bearing base layers, and trackway; in particular (1) high dynamic effects on low embankments (less than 6.5 feet)/foundation soils, and (2) critical speed issues of embankments over soft, compressible foundations with undrained shear strength less than 600 psf.

10.9.1 Slope Inclination

Fill – 2H:1V or flatter. Steeper slopes may be designed using geosynthetics (geogrids or geofabric) reinforcement to engineer an increased slope inclination.

Cut – 2H:1V or steeper if justified by slope stability analyses. Refer to Section 10.10.

10.9.2 Safety Factors

The stability of an embankment slope shall be evaluated using the Service-1 limit state. For the Service-1 static slope stability, the resistance factor is simply the inverse of the factor of safety (FOS). Table 10-4 shows the minimum required factors of safety for embankment slopes.

Table 10-4: Minimum Required Factors of Safety for Embankment Slopes

Loading Conditions	Factor of Safety
Normal (Permanent) (1)	≥1.50
Temporary (open less than 1 year)	≥1.30
Earthquake (OBE and MCE)	≥1.0 (2)

Notes:

(1) The factor of safety shall be in accordance with the requirements set forth by the local agencies.

(2) The stability of embankment slopes under earthquakes shall be analyzed by using the pseudo-static analysis, under the following conditions:

K_h depends on allowable slope deformation (Refer to Bray and Travasarou (2009) for estimation of K_h). Refer to Section 10.B.2.9.2 of *Appendix 10.B – Guidelines for Geotechnical Earthquake Engineering*.

$K_v = 0$

Where:

K_h = Horizontal seismic coefficient

K_v = Vertical seismic coefficient

10.9.3 Settlements

Once the embankments are designed to meet safe allowable bearing pressures and satisfy stability, settlements of the embankments during and after construction shall be evaluated.

RFP No.: 13-57 – Addendum No. 5 - 10/09/2014

Settlement assessment shall be performed for new and existing embankments with particular emphasis on the following critical areas:

- Approaches to bridge abutments
- Soft and organic layers beneath the embankment
- Subsiding areas

The vertical settlement of an embankment (which also affects overlying trackbed structure) is a combination of the permanent settlement of the foundation on which it is resting, plus permanent settlement of the embankment fill, and elastic and plastic deformations due to dynamic and repeated loading of the high-speed trains as depicted on Figure 10-1. Conventional settlement analyses shall consider 'immediate', 'consolidation', and 'secondary' components of settlement against the requirements of the CHSTP. For analysis of embankments, calculation procedures in the following references shall be used to assess soil settlement:

- Soil Slope and Embankment Design Manual, chapters 4 and 8, FHWA-NHI-05-123, 2005
- Soils and Foundations Reference Manual, chapter 7, FHWA-NHI- 06-088 Volume I, 2006

Figure 10-1: Settlements of Embankments

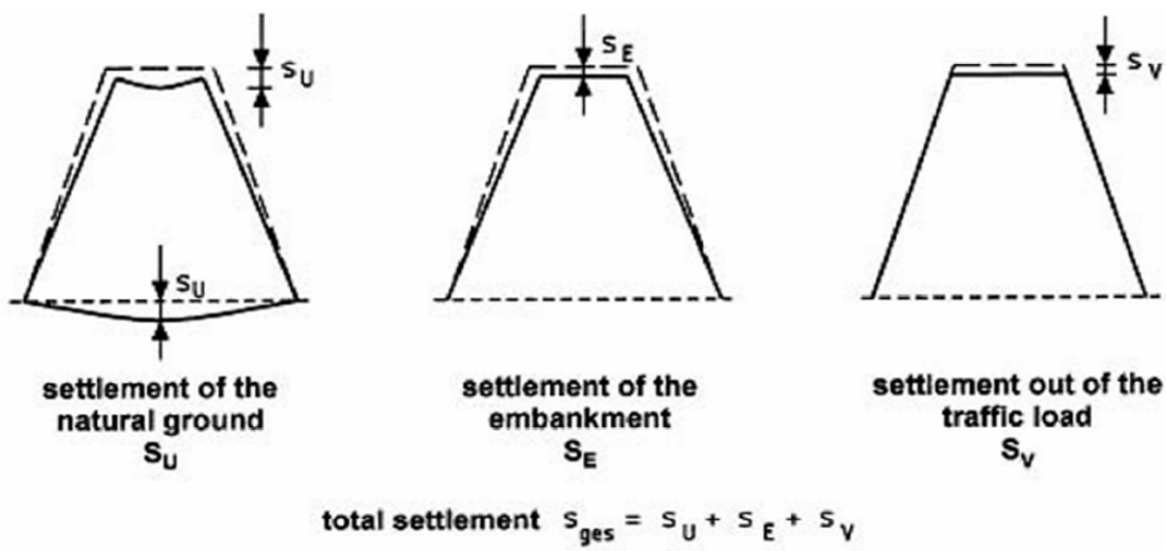

Notes:
Reference: Figure no. 21 of UIC-719R (2008)

Geotechnical evaluations for embankments and their foundations shall include the settlement contribution from surcharge/track load, high-speed train induced vibration, and additional loading and/or ground deformation due to earthquakes.

Once the embankments are designed based on safe bearing pressures and satisfying stability and constructed in the field, the 'residual' settlement estimates and differential settlements

RFP No.: 13-57 – Addendum No. 5 - 10/09/2014

between locations along the length of the embankments shall be evaluated and estimated through track-earth- structure interaction analyses by the Geotechnical Designer.

Table 10-5: Maximum Residual Settlement Limits

Residual Settlement (1)	Non-Ballasted Track	Ballasted Track(4)
Differential Settlement (2),(3)	≤ 3/8 inch	≤ 3/4 inch
Uniform Settlement(3)	≤ 5/8 inch	≤ 1-1/8 inch

Notes:

(1) Embankment shall be instrumented and monitored for a period of at least 12 months following completion of the structure. The Geotechnical Designer shall demonstrate future compliance with the residual settlements in Table 10-5 by extrapolation from the monitored data.

(2) Differential settlement shall be measured along the track (surface profile uniformity) in the vertical plane of each rail at the mid-point of a 62-foot long chord.

(3) For Service 1 and OBE load cases.

(4) For ballasted track, rail geometries will be maintained to meet FRA's guidelines as per normal maintenance.

Embankments shall be designed and constructed so as not to exceed the maximum residual settlement set forth in Table 10-5. "Residual" settlements occur over the design life after the track is laid and shall meet these criteria. Geostructures shall be instrumented and monitored for a period of at least 12 months following completion of the structure. The Geotechnical Designer shall demonstrate future compliance with the residual settlements (i.e., defined as settlements that are the sum of the remaining native foundation settlement and embankment consolidation settlement estimated to occur after 12 months of completion of embankment construction plus elastic and plastic deformations from dynamic train loading) by comparison of the monitored data and predicted settlement. These residual settlements are developed generally based on maintenance, passenger comfort, and track safety requirements. The residual settlements will be field verified by the Track Contractor.

If the predicted differential settlements are excessive and exceed track profile tolerances, then embankment designs shall be modified and ground improvement designed if needed to act as a foundation system. Where predicted settlements and their duration are excessive, consideration shall be undertaken to change the design from an embankment to an aerial structure or other structure.

Settlement of earth structures is time-dependent and will vary by segment. The time duration of the "waiting (leaving) period" shall be evaluated and established. This period shall not be shorter than the 12 month monitoring period following initial fill embankment placement before re-leveling of subgrade. After this evaluation and establishment of the waiting period, subsequent construction of the overlying trackbed "permanent way" is allowed to take place. An illustration of various settlement parts related to time is depicted on Figure 10-2. To meet CHSTP design and performance requirements, a settlement survey program shall be developed and then implemented during and after the construction phase to monitor settlement at the

RFP No.: 13-57 – Addendum No. 5 - 10/09/2014

"acceptance check" timeframe after laying track, and then long term 'residual' settlement as part of the track maintenance program.

Figure 10-2: Different Settlement Parts by Time

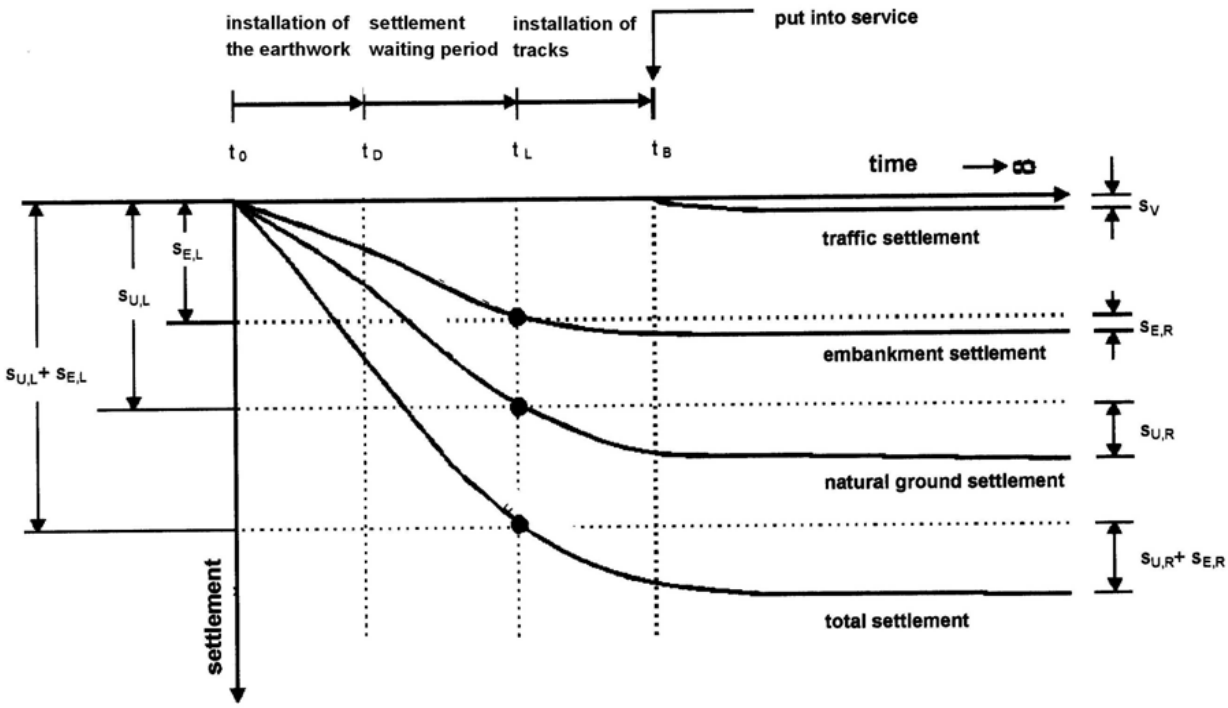

Notes:

Reference: Figure no. 22 of UIC-719R (2008)

Commentary: Per UIC 719R section 2.10.2.2 - Elastic vertical displacement of earthworks under load is usually not a design criterion, as resistance of continuous supporting structure generally implies very low vertical displacement (typically 0.004 to 0.008 inches [or 0.1 to 0.2 mm] on top of supporting structure). However, design criteria may exist to limit elastic deformation to a percentage of deformation of track components to manage the global track stiffness.

10.9.3.1 Track Subgrade Settlement Analysis

Track subgrade settlement analysis, using finite element methods such as ADINA, ABAQUS, ANSYS, PLAXIS, etc., shall be performed to estimate track-subgrade settlements as a result of dynamic loading of the high-speed trains. Limiting values are presented in Section 10.14.3.1 for ballasted and non-ballasted tracks over earthen structures such as embankments or retaining structures supporting high-speed trains.

10.9.3.2 Embankment Foundation Settlement Mitigation and Foundation Modification using Ground Improvement Methods

For track embankment segments or at-grade trackway, including features such as OCS poles, walkway, and ballasted and non-ballasted trackways that do not meet settlement criteria or indicate stability problems, advanced mitigation measures such as pre-loading, over-excavation and replacement, or other ground improvement methods/measures shall be considered for geotechnical design. The selection of mitigation methods/measures shall follow the process

RFP No.: 13-57 – Addendum No. 5 - 10/09/2014

described in detail in FHWA's Ground Improvement Reference Manuals Volumes I and II; FHWA-NHI-06-019/020 dated 2006.

A settlement monitoring program shall be developed and implemented during the construction phase for any mitigation method/measure selected. Interferometric Synthetic Aperture Radar (InSAR) techniques shall be considered as possible methods for large scale 'regional' monitoring in addition to ground truth measurements, such as GPS measurements and traditional surveying and use of geotechnical instrumentation during and after construction.

10.9.4 Benching of Slopes

For embankments higher than 30 feet (measured from existing ground surface to top of slope), design shall include mid-slope benches to mitigate surface erosion and to facilitate future access for maintenance reasons. Slope benches shall be at least 6 feet wide with a 4 to 6 percent slope towards the low end of the slope with a lined drainage channel. For embankments higher than 30 feet, slope benches shall be designed at every 25 to 30 feet in height connected to the surrounding ground surface for access.

At the top surface of the embankment, transverse cross-slope for drainage shall be 24:1 towards the outer edges of the embankment foreslopes (refer to Figure 10-3).

When an embankment is constructed next to an existing slope, the existing slope shall be benched in steps (typically 5 to 10 feet wide and no greater than 4 feet deep) to ensure the fill embankment is keyed into the existing slope (refer to Figure 10-3). Drainage measures shall be placed on these benches to facilitate and convey groundwater to discharge outlets.

Figure 10-3: Typical Section Earthwork Cut/Fill

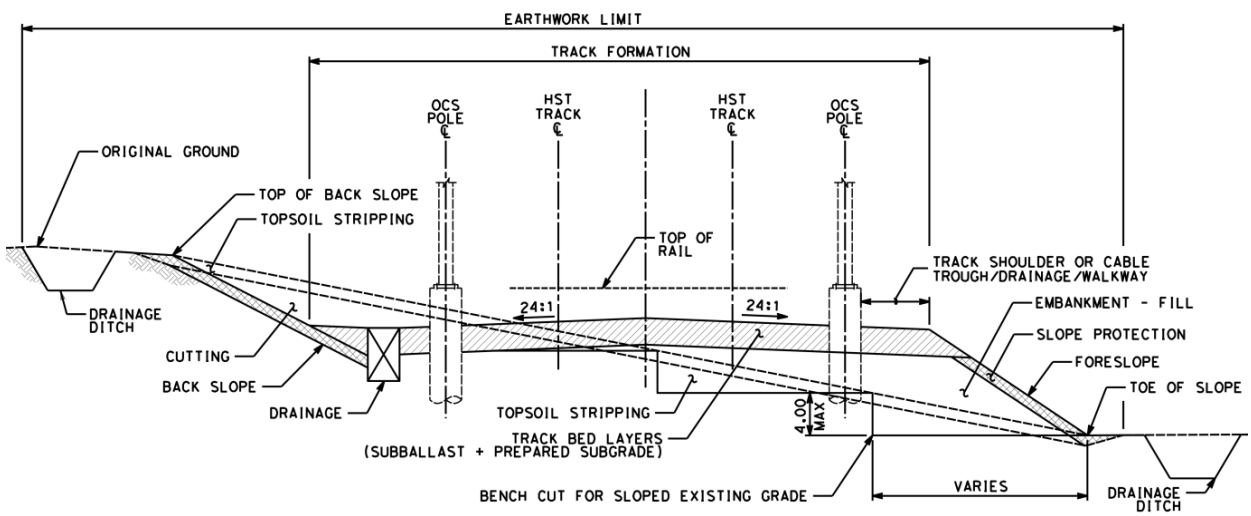

RFP No.: 13-57 – Addendum No. 5 - 10/09/2014

10.9.5 Particular Requirements

10.9.5.1 Foundation Support

If the height of the embankment is less than or equal to 6.5 feet, as measured from the flat top of the subballast at the side edge of the embankment to the existing ground surface, and the foundation subgrades are loose and soft, compressible soils, they shall be removed and replaced with backfill and compacted to ensure settlement criteria.

For embankment heights greater than 6.5 feet over loose, soft, and compressible subgrade soils, the global stability and settlement induced by the embankment load shall be evaluated and ground improvement implemented, if necessary, to improve stability and achieve settlement criteria.

10.9.5.2 Embankments in Wet Conditions

In case an embankment is located in a wet area where the groundwater table is permanently or periodically at ground level, the embankment shall be constructed on a layer of drainage material as depicted on Figure 10-4. This material shall not swell or deteriorate when immersed in water. It shall be well graded with no more than 10 percent passing the No. 200 sieve. The grading of the drainage material shall be designed according to Sherard's filter criteria (Sherard et al., 1984 a&b). A layer of geosynthetic cloth shall be placed below the drainage material to provide a better support to the drainage material.

Figure 10-4: Earthwork Embankment in Wet Conditions

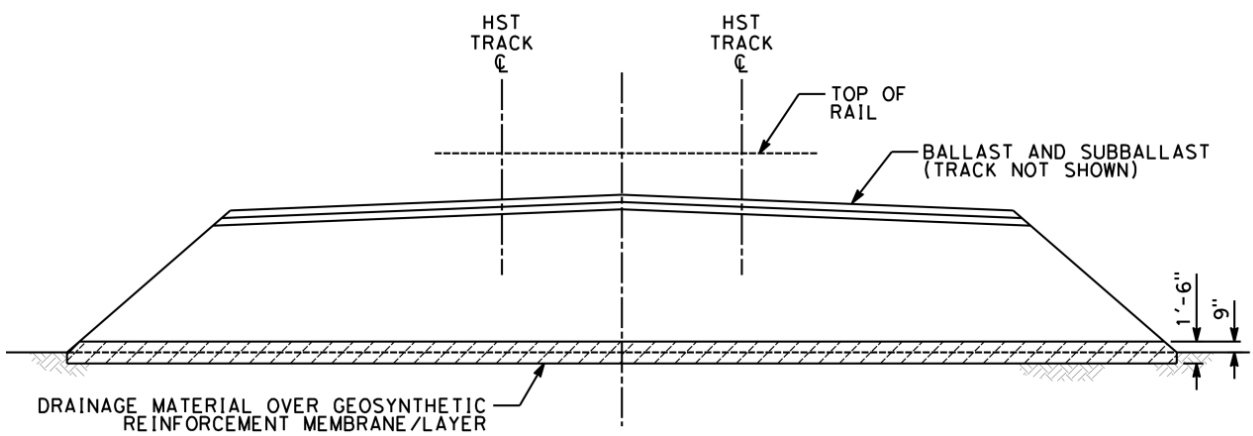

10.9.5.3 Embankment in Flood Plains

Where an embankment is located in a floodplain, the highest flood water level shall be evaluated from the 100-year flood. The embankment shall be, in addition to the drainage layer arrangement in Section 10.9.5.2, designed to protect the slopes within the highest water level with a layer of drainage layer and protection riprap as depicted on Figure 10-5. The drainage material shall be designed to comply with Sherard's filter criteria (Sherard et al., 1984 a&b). This

RFP No.: 13-57 – Addendum No. 5 - 10/09/2014

layer shall extend up to the highest flood water level plus 2 feet and be underlain by a layer of geosynthetic membrane.

Figure 10-5: Drainage Layer under Embankments in Floodplain / High Water

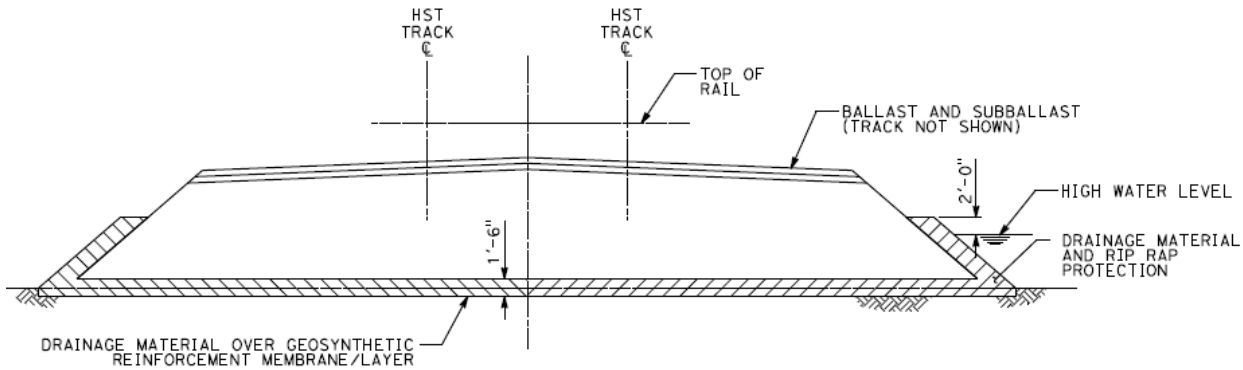

10.9.5.4 Embankments over Active Fault Locations

Where possible, embankments shall be located outside of active fault lines and founded on competent grounds. If this cannot be avoided, the embankments shall be designed with consideration of potential offsets for active fault crossings. Such consideration shall include both potential horizontal and vertical components of potential offset, as well as the relative orientation of this offset with respect to the track or embankment. Approaches to accommodate offset shall include making embankments wide enough and including designs with layers of geosynthetic cloth, geogrids drain rock at the bottom of embankments, and/or containment earthworks wide enough to accommodate the potential rupture offsets and subsequent re-alignment. Design of embankment over active fault locations shall consider life safety and preventive measures for ease of service restoration.

10.9.5.5 Embankments on Potentially Liquefiable Soils/Compressible Soils

Where embankments are underlain by soft compressible soils or loose saturated soils that indicate high potential of liquefaction under OBE and MCE earthquakes, mitigation shall be required. The following soil improvement methods should be considered to mitigate soil liquefaction and increase the consistency of the foundation subgrade:

- Replacement
  - Excavate and replace with compacted fill
- Vibratory Densification
  - Vibro-compaction
  - Vibro-replacement stone columns (combination of vibration and displacement)
  - Deep dynamic compaction

RFP No.: 13-57 – Addendum No. 5 - 10/09/2014

- Displacement Densification/Reinforcement
  - Compaction grouting
  - Displacement piles
  - Vibro-replacement stone columns (combination of vibration and displacement)
  - Rammed aggregate piers (Replacement or Displacement type)
- Mixing/Solidification
  - Permeation Grouting
  - Deep soil mixing
  - Jet grouting
- Surcharge with wick drains (for soft compressible soils)
- Lime columns for soft compressive clays
- Drainage (only used in combination with other ground improvement methods listed above)
  - Passive or active dewatering systems
  - Pipe Pile Stone Columns (drainage in combination of vibration and displacement)

Ground improvement design shall be in accordance with FHWA Ground Improvements Reference Manual Volumes 1 and 2, FHWA-NHI-06-019 and FHWA-NHI-06-020.

10.9.5.6 High-Speed Train Induced Ground Vibration on Embankments and At-grade Segments

High-speed trains will produce compressive (P) waves, shear (S) waves, and Rayleigh (R) waves, of which, Raleigh waves(moving parallel to the ground surface) are the primary source of vibrational energy. This vibrational energy could have a substantial destructive and fatiguing effect on the HST track-ground system composed of rails, ballast or ballasted slab, subballast, prepared subgrade, embankments, at grade segments, and foundation subgrades. In addition, ground vibrations generated by high-speed trains are of great concern because of the possible damage they can cause to buildings or other structures near the track and the annoyance to the public living in the vicinity of the track. Particularly in areas of soft, compressible, or loose soils, where the wave speed is comparable to the speed of the trains, a strong increase of the vibration level can occur. The impact of the high-speed train-induced ground vibration on the track-ground system shall be evaluated and mitigated accordingly to avoid long term degradation of the HST track-ground system and all adjacent structures. Mitigation methods are available against excessive ground vibration from high-speed traffic. What method or combination of methods shall be used depends on factors such as (1) the frequency content of the generated ground vibration, (2) overall stiffness of the embankments or at grade segments, and (3) the type, consistency, and layering of the soils at the site. Mitigation measures may consist of

RFP No.: 13-57 – Addendum No. 5 - 10/09/2014

replacing soft/loose soils with compacted fill, piled slabs, ground treatment such as dry deep mixing method (lime/cement columns) in soft clays or stone columns in loose sandy soils.

For design purposes, the following shall be required:

- Vibration induced stability of the embankment, at grade segments, and adjacent structures shall be verified.
- Tracks shall be supported by well compacted ballast/subballast, or non-ballasted track.
- Embankments or at grade segments supporting the track shall be adequately compacted.
- Subgrade underlying the embankment or at grade segments shall be competent and firm, and if soft compressible or loose soils are present, they shall be stabilized with ground treatment to increase its overall stiffness with undrained shear strength ≥ 15 psi and E_{v2} ≥ 6,500 psi. E_{v2} is the subgrade stiffness (strain modulus) evaluated from the 2nd loading of a plate load test according to ASTM D1196, and DIN 18134.

In addition, an instrumentation program shall be devised to investigate the effect of the stabilization measures before and after the measures are conducted.

10.9.5.7 Embankment Prepared Subgrade

Material and thickness of the prepared subgrade for each track type (ballasted and non-ballasted) shall be as noted in the "Thickness of Prepared Subgrade" table of Figure 10-6. For non-ballasted track where the embankment height is low (less than 6.5 feet as measured from the flat top of the subballast at the side edge of the embankment to the existing ground surface), excavation below existing grade is not required to achieve a 6.5-foot thick prepared subgrade if it can be demonstrated by field testing that E_{v2} of the existing subgrade is ≥ 11,500 psi after the foundation soil is proof-rolled. In this case, the thickness of the prepared subgrade can be reduced to the available thickness, but it shall not be less than 14-inch thick and E_{v2} ≥ 11,500 psi shall be provided.

10.9.5.8 Transition of Embankments to Structures

Embankments adjacent to the bridge, aerial structure, or grade separation abutments, tunnel portals, cut-and-cover structures, and cut sections with an abrupt topographic change shall be designed to minimize the differential settlement and to provide a smooth transition in the structural stiffness between different infrastructures. Provide a smooth transition by stiffening the subballast/bearing base layer and the approach fill with soil cement as depicted on Figures 10-6, 10-7, and 10-8.

RFP No.: 13-57 – Addendum No. 5 - 10/09/2014

Figure 10-6: Transition from Concrete Slab to Embankment

THICKNESS OF PREPARED SUBGRADE		
MATERIAL	TRACK TYPE	THICKNESS
WELL GRADED SOILS CONTAINING 5% TO 15% FINES	BALLASTED TRACK	14"
	NON-BALLASTED TRACK	6'-6"

GRADATION FOR PREPARED SUBGRADE MATERIAL	
GRAIN SIZE (mm)	PERCENTAGE PASSING [D=20 TO 125 (mm)]
P(2D)	100
P(DMAX)	100~99
P(D)	99~85
P(D/2)	84~55
P(D/5)	60~31
P(D/10)	49~23
P(D/20)	40~17
P(D/50)	30~11
P(D/100)	22~8
P(D/200)	16~6
P(D/500)	9~3
P(D/1000)	6~2

D = NOMINAL GRAIN SIZE
Dmax = 1.25D IF D ≥ 50 mm;
Dmax = 1.58D IF D < 50 mm

NOTES:

1. TRANSITIONS SHALL BE DESIGNED TO MINIMIZE THE DIFFERENTIAL SETTLEMENT AND TO PROVIDE A SMOOTH TRANSITION IN THE STRUCTURAL STIFFNESS BETWEEN DIFFERENT INFRASTRUCTURES.
2. EMBANKMENTS SHALL BE DESIGNED SPECIFICALLY TAKING INTO ACCOUNT THE CONSTRUCTION SEQUENCE AND THE GEOMETRICAL, GEOLOGICAL AND GEOTECHNICAL CONDITIONS OF THE SITE.
3. THE MINIMUM SUBBALLAST (SUPPORTING BALLASTED TRACK) THICKNESS SHALL BE 9".

LEGEND:

MPD MODIFIED PROCTOR DENSITY (AASHTO T180)

E_{v2} DEFORMATION MODULUS OF SECOND LOADING

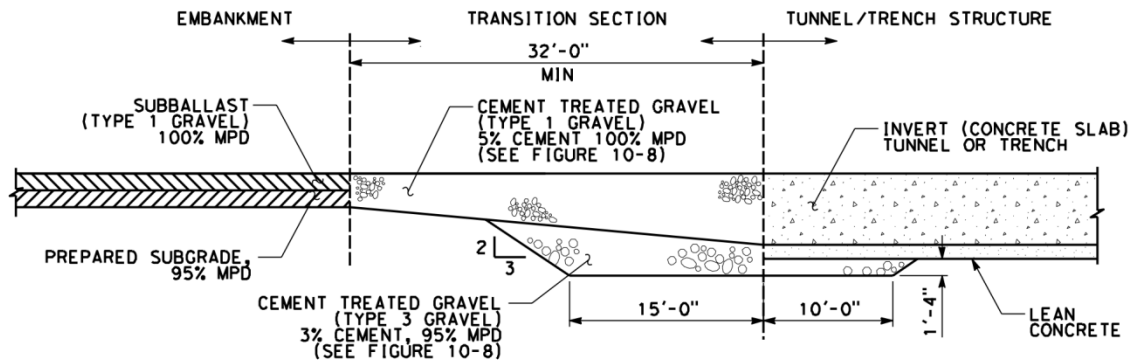

RFP No.: 13-57 – Addendum No. 5 - 10/09/2014

Figure 10-7: Transition from Cut to Embankment

THICKNESS OF PREPARED SUBGRADE		
MATERIAL	TRACK TYPE	THICKNESS
WELL GRADED SOILS CONTAINING 5% TO 15% FINES	BALLASTED TRACK	14"
	NON-BALLASTED TRACK	6'-6"

GRADATION FOR PREPARED SUBGRADE MATERIAL	
GRAIN SIZE (mm)	PERCENTAGE PASSING [D=20 TO 125 (mm)]
P(2D)	100
P(DMAX)	100~99
P(D)	99~85
P(D/2)	84~55
P(D/5)	60~31
P(D/10)	49~23
P(D/20)	40~17
P(D/50)	30~11
P(D/100)	22~8
P(D/200)	16~6
P(D/500)	9~3
P(D/1000)	6~2

D = NOMINAL GRAIN SIZE
Dmax = 1.25D IF D ≥ 50 mm;
Dmax = 1.58D IF D < 50 mm

NOTES:

1. TRANSITIONS SHALL BE DESIGNED TO MINIMIZE THE DIFFERENTIAL SETTLEMENT AND TO PROVIDE A SMOOTH TRANSITION IN THE STRUCTURAL STIFFNESS BETWEEN DIFFERENT INFRASTRUCTURES.
2. EMBANKMENTS SHALL BE DESIGNED SPECIFICALLY TAKING INTO ACCOUNT THE CONSTRUCTION SEQUENCE AND THE GEOMETRICAL, GEOLOGICAL AND GEOTECHNICAL CONDITIONS OF THE SITE.
3. THE MINIMUM SUBBALLAST THICKNESS SHALL BE 9".

LEGEND:

MPD MODIFIED PROCTOR DENSITY (AASHTO T180)

E_{v2} DEFORMATION MODULUS OF SECOND LOADING

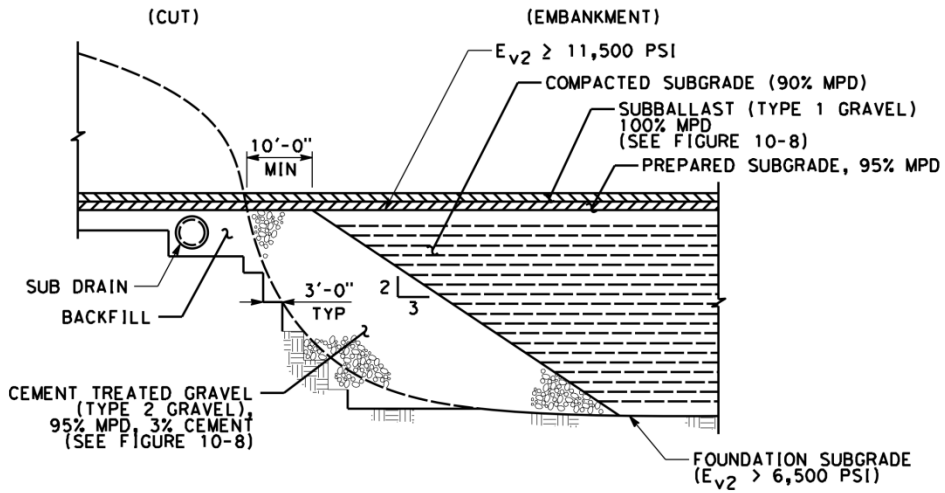

RFP No.: 13-57 – Addendum No. 5 - 10/09/2014

Figure 10-8: Transition from Bridge, Aerial Structure, or Grade Separation to Embankment

TYPE 1 GRAVEL NOTE:

CEMENT TREATED GRAVEL 0/31.5. COMPACTION SHALL BE GREATER THAN 100% OF MAX DRY DENSITY ACCORDING TO AASHTO T180 MPD. DEFORMATION MODULUS E_{v2} SHALL BE GREATER THAN 17,000 PSI.

TYPE 1 GRAVEL	
SIEVE	% PASSING
1.5 INCH	88~100
1.0 INCH	82~97
3/4 INCH	75~92
3/8 INCH	64~85
NO. 4	53~77
NO. 10	40~68
NO. 40	22~48
NO. 100	10~36
NO. 200	3~22

TYPE 2 GRAVEL NOTE:

CEMENT TREATED GRAVEL 0/20. COMPACTION SHALL BE GREATER THAN 95% OF MAX DRY DENSITY ACCORDING TO AASHTO T180 MPD E_{v2} > 15,000 PSI.

TYPE 2 GRAVEL	
SIEVE	% PASSING
3/4 INCH	83~100
3/8 INCH	53~83
NO. 4	36~65
NO. 10	23~49
NO. 40	12~31
NO. 100	7~19
NO. 200	4~12

TYPE 3 GRAVEL NOTE:

GRAVEL 0/60. COMPACTION SHALL BE GREATER THAN 95% OF MAX DRY DENSITY ACCORDING TO AASHTO T180 MPD. DEFORMATION MODULUS Ev2 SHALL BE GREATER THAN 80 11,500 PSI.

TYPE 3 GRAVEL	
SIEVE	% PASSING
2.0 INCH	80~100
3/4 INCH	43~72
NO. 4	21~46
NO. 10	14~35
NO. 40	7~19
NO. 100	3~10
NO. 200	2~6

NOTES:

1. TRANSITIONS SHALL BE DESIGNED TO MINIMIZE THE DIFFERENTIAL SETTLEMENT AND TO PROVIDE A SMOOTH TRANSITION IN THE STRUCTURAL STIFFNESS BETWEEN DIFFERENT INFRASTRUCTURES.
2. EMBANKMENTS SHALL BE DESIGNED SPECIFICALLY TAKING INTO ACCOUNT THE CONSTRUCTION SEQUENCE AND THE GEOMETRICAL, GEOLOGICAL AND GEOTECHNICAL CONDITIONS OF THE SITE.
3. THE MINIMUM SUBBALLAST THICKNESS SHALL BE 9"
4. THE MINIMUM THICKNESS SHALL BE EQUAL TO THE COMBINED THICKNESS OF THE SUBBALLAST AND THE PREPARED SUBGRADE AND NO LESS THAN 1'-11".
5. LENGTH L, SHALL BE 4H OR 65'; WHICHEVER IS GREATER.
6. PREPARED SUBGRADE THICKNESS IS SHOWN ON FIGURES 10-6 AND 10-7.

LEGEND:

MPD MODIFIED PROCTOR DENSITY (AASHTO T180)

E_{v2} DEFORMATION MODULUS OF SECOND LOADING

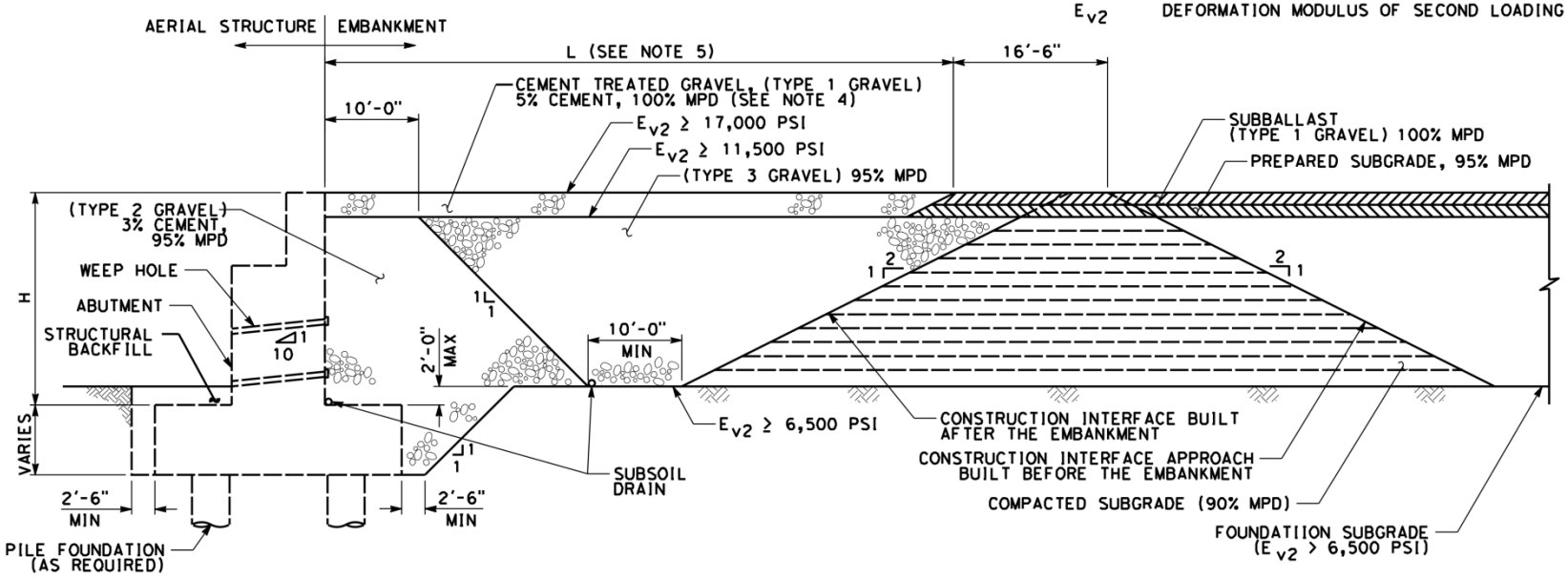

RFP No.: 13-57 – Addendum No. 5 - 10/09/2014

10.9.5.9 Embankments in Cut Sections

Embankment design in cut sections shall include selection of appropriate earthworks for a given setting based on design constraints and potential conflicts, geotechnical subsurface investigations, and surface and groundwater issues. Figure 10-3 depicts a typical embankment in a cut section.

10.9.5.10 Drainage (Surface and Subsurface)

Control of surface and ground water is essential to avoid surface erosion and potential slope instability. In addition to the requirements set forth in the *Drainage* chapter, provision shall be made in the design for an adequate system of surface and subsurface drainage and surface protection that incorporates sufficient capacity for the following:

- Design rainfall run-off to prevent long term erosion
- Build-up of groundwater that could result in slope instability

Notwithstanding the requirements of available relevant standards, consideration shall be given to the long term performance of the drainage and erosion control system for each embankment of fill under local conditions.

Where horizontal drains are to be used, a protective measure shall be devised to protect the drains from freeze/thaw. A long term maintenance program shall be developed by the Geotechnical Designer in order to safeguard the long term functionality of the horizontal drains.

Geotechnical design shall also include evaluation of temporary construction erosion control requirements on cut and fill slopes when integral to geotechnical design or performance. For example, the requirement to provide bench drainage during construction of slopes may be required to ensure construction phase stability.

For secondary structures, the drainage design shall be made according to the requirements set forth in the jurisdiction of the local county, city, or third party such as Caltrans, UPRR, etc.

10.9.6 Soil Materials Used for Embankments

For design purposes, evaluation of soil suitability for re-use within the body of embankments shall be based on the following guidelines:

RFP No.: 13-57 – Addendum No. 5 - 10/09/2014

Table 10-6: Soil Material Suitability for Engineered Fill in Embankments

Acceptable (1)	Unacceptable (2)
A-1-a	A-4 (CBR <10)
A-1-b	A-2-7
A-2-4	A-5
A-2-5	A-6
A-2-6	A-7-5
A-3	A-7-6
A-4 (CBR >10)	*

Notes:

Source: Per ASTM D3282 / AASHTO Subgrade Soil Group System

Refer to the *Trackwork* chapter and Standard Specifications for Trackbed layers of subballast and prepared subgrade.

* Rockfill is not acceptable for track embankment material.

(1) In addition to the AASHTO criteria, the maximum soil particle size is limited to 3 inches.

(2) Potential embankment fill source materials from groups A-2-7, A-5, A-6, and A-4 (with CBR <10) that can be shown by analysis and testing to meet performance requirements (including strength, stability, settlement/deformation, long-term durability, etc.) shall be submitted for consideration of acceptability on a case-by-case basis. This includes marginal soil types from these groups that can be 'modified' using soil amendments or additives such as cement, lime, hydraulic binders, etc., to be rendered suitable for use provided they meet performance requirements (described above) as demonstrated by analysis and testing programs including laboratory trial batching and field test sections.

Soil suitability evaluations shall also consider potentially detrimental properties as follows:

- **Frost Susceptibility –** soil types susceptible to frost, such as silt or clay, shall not be used for embankments in regions where cold conditions (below freezing temperatures) can occur in order to reduce the potential to cause unacceptable disturbances to track geometry upon freeze/thaw cycles.
- **Corrosivity –** soil suitability shall also consider corrosion potential.[11] Corrosive soils that are potentially detrimental to buried metal and/or concrete features (such as Overhead Contact System (OCS) poles, pipes/culverts, geogrid reinforcement, etc.) shall not be used.
- **Slake Durability of Rock –** based on the slake durability behavior in wetting and drying cycles.

10.10 Cut Slopes

Cut slopes include soil, Intermediate Geomaterials (IGM), and rock slopes, and shall be designed per the following sections. Sloped excavations during construction shall be designed

[11] Corrosion potential is the potential of a corroding surface in an electrolyte relative to a reference electrode measured under open-circuit conditions.

RFP No.: 13-57 – Addendum No. 5 - 10/09/2014

and constructed in compliance with local, state, and federal regulations, including but not limited to Occupational Safety and Health Administration (OSHA), and Cal/OSHA requirements.

10.10.1 Design of Cut Slopes

Design of cut slopes shall consider the following:

- Impact of slope instability to the HST facility operations and integrity (short term and long term)
- Slopes within existing pre-historic landslide areas
- Locations where liquefaction-related lateral spreading conditions are present
- Rock slopes with adversely oriented and kinematically unstable structural discontinuities such as joints, bedding planes, shear planes, gouges, and faulted zones

At each cut slope location, the following shall be evaluated:

- Locations where evidence of prior landsliding is present
- Slopes composed of quick, sensitive, and expansive clays

At each cut slope, the following shall be evaluated:

- Slope stability (static and seismic)
- Construction of the cut slope shall not lead to reactivation of existing landslides or the formation of new ones

For design of rock slopes, refer to *Appendix 10.C – Guidelines for Rock Slope Engineering*.

10.10.1.1 Design Requirements

Slope Inclination (Typical[12])

- **Soil cut –** 3H:1V slope or steeper if justified by slope stability analyses
- **IGM cut –** 2H:1V slope or steeper if substantiated by slope stability analyses
- **Rock cut –** 1H:1V slope or steeper if justified by slope stability analyses

10.10.1.2 Safety Factors

For design criteria for stability of cut slopes, refer to Section 10.9.2.

[12] The slope inclination design guidelines stated herein do not apply to the cut slopes in pre-historic landslide areas, prior landslide locations, and potential liquefaction related lateral spreading conditions, slopes composed of sensitive, quick, and expansive clays.

RFP No.: 13-57 – Addendum No. 5 - 10/09/2014

10.10.2 Drainage (Surface and Subsurface)

Drainage provisions and permanent erosion control facilities to limit erosion (including soil erosion and rock slope degradation) are required for design of cut slopes. Surface drainage shall be accomplished through the use of drainage ditches and berms located above the top of the cut, around the sides of the cut, and at the base of the cut. Erosion control for cut slopes shall be performed similar to those stated in Section 10.9.5.10 and Section 10.11.2. Impermeable coverings with drainage provisions (weeps and geocomposite mats) such as shotcreting (with or without ground reinforcements), stone-pitching, etc., shall be considered to protect rock slopes from degradation and deterioration due to weathering.

Subsurface drainage systems such as cut-off drains, horizontal drains, french drains, etc., shall be designed to permanently lower groundwater table to enhance overall stability of the slopes. For other drainage related design criteria, refer to the *Drainage* chapter for details.

10.10.3 Slope Stability Mitigation Methods for Cut Slopes

Where the minimum required factors of safety cannot be achieved or the alignment cannot be relocated away from unstable slopes, the Geotechnical Designer shall design measures to enhance slope stability. Slope stability mitigation measures for cut slopes include the following:

- Soil Cuts
  - Flattening the slopes (if permitted by right-of-way) with vegetation cover
  - Buttressing the toe of the slopes
  - Stabilizing the slope with ground reinforcements such as soil nails and soil anchors with or without shotcrete
  - Covering the slope face with stone pitching, concrete, or shotcreting
  - Debris flow diversion walls
  - Retaining walls such as soldier pile walls, secant pile and tangent piles, gabion walls, etc.
  - Drainage and subdrainage measures
  - Ground improvements such as deep soil cement mixing or jet grouting
  - A combination of any of the above
- Rock Cuts
  - Rock scaling and dentition
  - Rock fall ditches
  - Rock fall retention meshes
  - Rock fall detention fences

RFP No.: 13-57 – Addendum No. 5 - 10/09/2014

- Rock dowels and anchors
- Shotcreting
- A combination of any of the above

10.11 Existing Slopes

The Geotechnical Designer shall evaluate existing slopes for potential instability. At a minimum, the Geotechnical Designer shall mitigate unstable slopes to ensure that they will not pose a detrimental impact to the alignment.

10.11.1 Protection of Existing Slopes

The Geotechnical Designer shall be responsible for a design that maintains the stability of existing slopes during the course of construction. Slope instability that occurs during construction shall be repaired by the Contractor at its own expense.

10.11.2 Drainage (Surface and Subsurface)

Erosion control and drainage measures shall be evaluated, considered and designed for existing slopes. Erosion of slopes presents a significant maintenance issue and overall stability concern. Rock and soil strata that are susceptible to erosion and/or freeze/thaw shall be mapped and delineated for existing and new fills and cuts. Slope protection measures shall be evaluated on site-specific conditions, such as surface and subsurface conditions, cut geometry, and susceptibility of erosion or deterioration. Each cut and fill slope that requires erosion control and drainage measures shall be evaluated for the following:

A. Reduction of water flow across slope

Where slope revegetation cannot be sufficiently established, reduce the quantity of water flowing over the slope from upland areas by means of drainage or interceptor ditches across the top of the slope and down the ends of the slope. At the base of the slope, water shall be directed to a discharge point. Coordinate discharge point drainage with existing facilities.

Drainage or interceptor ditches shall be lined or unlined and capable of carrying water generated from upland areas based on the 100-year storm. Lining materials shall be cast-in–place concrete, pre-cast concrete, reinforced shotcrete, or asphalt. Rock check dams to slow flows shall be designed and installed based on flow calculations.

B. Slope Revegetation

Where the slope can be made to support vegetation, local plantings shall be used to establish root systems to stabilize the surface of the slope and prevent deterioration of the slope. Design and provide systems of degradable woven blankets to temporarily hold plantings in place and minimize erosion until vegetation has established a stable root system.

RFP No.: 13-57 – Addendum No. 5 - 10/09/2014

C. Slope Armor

Where slopes will not support vegetation, slope cover/protection or permanent facing shall be used to protect the slope. Such measures as mattress-shaped steel wire mesh containers, gabions, articulated concrete blocks, fabric formed concrete, shotcrete, geosynthetic cells filled with gravel, and rip-rap (crushed stone) placed on a graded filter shall be evaluated, designed and installed. Stone sizes shall be designed based on design water flows.

D. Subsurface Water Control

Design of subsurface water drainage features shall be evaluated as water control measures. Design shall consider the use of horizontal drains, blanket drains, trench drains and geocomposites for both cut and fill slopes. Design shall consider outlet design and address long-term performance and maintenance requirements for the drainage system.

E. Springs and Water Seepage

Any springs and water seepage identified in the field shall be contained by means of drainage systems. Design shall consider long-term performance and maintenance requirements for the drainage system.

For other drainage related design criteria, refer to the *Drainage* chapter for details.

10.12 Cut-and-Cover Underground Structures

The cut-and-cover underground structures include subways, cross-passages, sump pump structures, stations, building basements, vaults, ventilation structures, and other structures of similar nature.

Underground structures shall include waterproofing protection, drainage systems and/or dewatering pumps as needed to prevent water buildup in the underground structures.

10.12.1 Structural Systems

The structural system for cut-and-cover line structures shall be single and/or multi-cell reinforced concrete box structures, with walls and slabs acting one-way in the transverse direction to form a frame. Walls that provide temporary support of excavation shall not be used as part of the permanent structure. Expansion joints are required at locations of major change in structural sections such as from line structure to station. Construction joints shall have continuous reinforcing steel and non-metallic waterstops.

10.12.2 Water Pressure (Buoyancy)

Refer to the *Structures* chapter for water loads (water pressure for design criteria for buoyancy) and requirements for different buoyancy resisting elements.

Refer to Section 10.8 for types of systems to be allowed to resist buoyancy.

RFP No.: 13-57 – Addendum No. 5 - 10/09/2014

10.12.3 Temporary Support of Underground Structures

Equivalent static loads and deformations may be used to design temporary support systems such as wales, struts, and braces recognizing the short duration of these systems. These loads shall be provided by the Geotechnical Designer and shall be shown on the shoring design calculations and drawings.

In locations where adjacent buildings and their foundations create an interaction configuration in conjunction with temporary ground support structures that would significantly influence the seismic response of the adjacent buildings themselves, the combined group of temporary ground support and building structural configurations shall also be analyzed as a single structure to confirm seismic response of the buildings. In addition, the effect of stress redistribution onto existing adjacent structures due to the design of temporary support systems shall be considered and mitigated as necessary since it is determined by the means and methods selected by the Contractor.

10.12.4 Temporary Lateral Loading Conditions

Refer to the *Structures* chapter for construction loads and definition of temporary structures.

Soil Pressures – The Geotechnical Designer shall have the responsibility of determining earth pressures of temporary earth support; however, the earth pressures shall not be less than those calculated assuming the active case. Pressures shall consider the impacts due to compaction. The temporary design of the wall shall not allow for overstressing of the wall.

Water Pressures – The temporary earth support system shall be designed to construction term water pressures that are not lower than the existing groundwater level or seepage pressures, with consideration given to the potential of elevated groundwater conditions due to ground water re-injection activities.

Surcharge Loads – The earth support system shall include surcharge loads including, but not limited to traffic, construction material and equipment, and building loads.

Earthquake Loads – Unless otherwise stated in this chapter, earthquake loads (i.e., seismic earth pressures) shall be considered.

Temporary Excavation Support Systems – Excavation and backfill sequence and strut installation and strut removal sequence shall be in accordance with the Designer of Record's design requirements.

Temporary earth support may remain in place or be removed following completion of the structure. Temporary earth support walls left in place shall be cut off at a depth not higher than 5 feet below grade or top of structure whichever is higher. Removal of temporary earth support walls shall be permitted. The settlement analysis shall indicate that removal will not cause settlement and lateral movement of adjacent structures, sidewalks, streets, and utilities. Tiebacks used to retain temporary support walls shall be de-tensioned prior to abandonment.

RFP No.: 13-57 – Addendum No. 5 - 10/09/2014

10.12.5 Permanent Lateral Loading Conditions

Soil Pressures – Permanent underground structures shall be designed for earth pressures as given in Section 10.8.3. The at-rest pressures shall be used in the design of cut-and-cover underground structures. In addition, hydrostatic pressures and seismic loadings shall also be included in the design of the underground structures.

Surcharge Loads – Loads from adjacent building foundations shall be used in the design of cut-and-cover underground structures unless these existing buildings are founded on piles or permanently underpinned at a depth below the zone of influence of the cut-and-cover structures. Horizontal distribution of loads from foundations of existing buildings shall be determined in accordance with AASHTO LRFD BDS with California Amendments Article 3.11.6.

10.12.6 Deformation Limits for Support of Excavation Systems

Excavation support systems shall be designed to limit wall deformations that would otherwise lead to ground settlements, resulting in damage to the support systems or any superimposed structures and adjacent structures/utilities. Ground settlement and lateral deformation shall be limited to less than 1 inch and 1/2 inch, respectively. The Geotechnical Designer shall analyze the support of the excavation system taking into account the ground conditions, potential impacts to neighboring or adjacent structures or property, wall stiffness, requirements for wall bracing systems, global stability, and sequence of construction including timing of support installations to evaluate the lateral deformations and settlements for open cut excavation methods. In locations where adjacent structures or property impacts are not significant, more relaxed site-specific criteria may be considered through the design variance process provided that overall stability is maintained.

Ground settlement predictions due to cut-and-cover excavations shall utilize empirical recommendations given by Clough and O'Rourke (1990) or numerical modeling software such as Finite Element Analyses, Plaxis, or Finite Difference modeling software such as FLAC. The Geotechnical Designer shall consider the following:

- The installation and (where appropriate) extraction of the support systems
- Movements (settlement and lateral wall deformation) at all stages of excavation
- Consolidation settlements
- The effects of grouting, piling, soil improvement, dewatering, or any other measures required for the Works that could cause ground settlements
- Seepage analyses shall be carried out for all excavations, and the potential consolidation settlements shall be assessed
- Settlement contour plans associated with excavation of cut-and-cover excavations shall be prepared and shall include immediate and consolidation settlements

RFP No.: 13-57 – Addendum No. 5 - 10/09/2014

10.12.7 Dewatering

Concrete placement of a cut-and-cover structure below a groundwater table shall be either by tremie concrete or placed in the dry. When placement in the dry method is chosen, a dewatering/groundwater control system shall be designed to permit placement of all structural elements in the dry. The bearing subgrade shall be kept dry and stable with no flowing, standing and/or piping of the groundwater permitted. Water levels within the limit of excavation shall be maintained a minimum of 5 feet below subgrade. Tremie seals, grouting, and other similar methods shall be permitted as part of dewatering/groundwater control methods.

Design and installation of a groundwater recharge system to protect nearby structures and utilities shall be performed to mitigate excessive ground settlements induced by dewatering. In addition, the dewatering system shall be designed so that the construction dewatering recharge system will not adversely impact existing fresh water aquifers.

10.13 Seismic Design

Seismic design requirements are also covered in the *Seismic* chapter and the *Structures* chapter. The geotechnically-focused elements of the seismic design criteria are presented in this section. Structures shall be designed to resist seismically induced forces and deformations due to ground motions resulting from an earthquake, and to meet the performance criteria specified in this document. Foundations shall be designed to address inertial loads from superstructures, liquefaction, lateral spread, and other seismic effects such that they will behave elastically under the design OBE, and no collapse under the design MCE. Earth retaining structures shall be evaluated and designed for seismic stability internally, externally, and globally. Cut slopes in soil and rock, fill slopes, and embankments having impact on the operations of high-speed trains shall be evaluated for instability due to design seismic events and associated geologic hazards.

10.13.1 Design Earthquakes

For seismic design guidelines and performance requirements, refer to the *Seismic* chapter.

10.13.2 Seismic Hazard and Ground Motions

For this project, preliminary design response spectra and ground motions (time histories) matching the site design response spectra has been provided to prospective design bidders for bid. Upon receipt of the site specific subsurface investigation data from the Contractor after the Notice to Proceed (NTP), the preliminary design response spectra and ground motions will be re-evaluated and updated, if necessary, by a seismic specialists team retained by the Authority for use during final design. The seismic hazard levels and new sets of input ground motions at half boundary will be developed by the seismic specialists team and provided to the Contractor for development of site-specific response analyses appropriate for structures to be constructed.

RFP No.: 13-57 – Addendum No. 5 - 10/09/2014

Design of site specific site response analyses and mitigation of the seismic hazard shall be the responsibility of the Contractor.

10.13.3 Liquefaction of Foundation Soils

Liquefaction may cause partial or total loss of shear strength of soils, thereby causing foundation instability, flow slides, lateral spreading and ground settlements. The Geotechnical Designer shall evaluate the possibility of ground failures caused by liquefaction, the potential impacts to foundations, structures, and embankments, and develop mitigation measures to satisfy performance requirements.

Liquefaction-triggering evaluations shall be performed for sites that meet the following 2 criteria:

- The estimated maximum groundwater elevation at the site is within 75 feet of the existing ground surface or proposed finished grade, whichever is lower.
- The subsurface profile is characterized in the upper 75 feet as having soils that meet the compositional criteria of soils for liquefaction with a measured Standard Penetration Test (SPT) resistance, corrected for overburden pressure and hammer energy (N1)60-cs, less than 33 blows/foot, or a cone tip resistance qc1N-cs (defined as the normalized cone tip resistance with clean sand equivalence) of less than 185 ton per square feet, or a geologic unit is present at the site that has been observed to liquefy in past earthquakes.

Liquefaction-induced movement/settlement shall be estimated and compared with the allowable deformation values required in this chapter. The Geotechnical Designer shall develop mitigation measures accordingly to meet the allowable deformation values set forth in this chapter.

Guidelines for evaluation of soil liquefaction triggering potential are presented in *Appendix 10.B – Guidelines for Geotechnical Earthquake Engineering*.

Where potential for liquefaction exists under OBE and MCE earthquakes (as confirmed by liquefaction studies by the Geotechnical Designer) and its impact on foundations/structures/embankments is not acceptable, the following remedial measures shall be considered:

- Liquefiable soils shall be removed; or
- Soil improvement techniques shall be used (refer to Section 10.9.5.5); or
- Deep foundations such as piles or drilled shafts shall be used, and shall be designed to resist and accommodate the liquefaction-induced ground movements and force demands, taking into account the reduced soil properties as a result of liquefaction.

RFP No.: 13-57 – Addendum No. 5 - 10/09/2014

10.13.3.1 Compositional Criteria for Liquefaction Susceptibility for Soils

A. Sandy Soils

Sandy soils with few amounts of fines that meet the above-mentioned 2 criteria shall require liquefaction triggering evaluations.

B. Silty and Clayey Soils

Whether silty and clayey soils meet the criteria for liquefaction susceptibility shall be evaluated primarily using the criteria developed by Bray and Sancio (2006) and compared to results by analysis using the methods presented in Idriss and Boulanger (2008). The Modified Chinese Criteria for clayey soils in the Youd el al. (2001) method shall not be used.

For fine-grained soils that do not meet the above criteria for liquefaction, the effect of cyclic softening resulting from seismic shaking shall be evaluated and its impact on foundations/structures shall be analyzed and considered in the design.

Considering the range of criteria currently available in the literature, geotechnical engineers shall consider performing cyclic triaxial or simple shear laboratory tests on undisturbed soil samples to assess cyclic response for critical cases.

C. Gravels

Gravel layers shall be considered potentially susceptible to liquefaction, and their liquefaction susceptibility shall be evaluated. A gravel layer that contains sufficient sand to reduce its permeability to a level near that of the sand, even if not bounded by lower permeability layers, shall be considered susceptible to liquefaction and its liquefaction potential shall be evaluated as such.

10.13.4 Underground Structures

Seismic design of underground structures shall be based primarily on the ground deformation approach specified herein. During earthquakes, underground structures move together with the surrounding soil/rock mass. The structures shall therefore be designed to accommodate the deformations imposed by the ground, taking into consideration the soil-structure interaction effect.

Seismic effects on underground structures take the form of deformations that in general cannot be changed significantly by stiffening the structures. The structures shall instead be designed and detailed to withstand the imposed deformations without losing the capacity to carry applied loads and to meet the performance goals of the structures. Shear capacity degradation and compressive strains shall be evaluated. If necessary, additional confinement reinforcement shall be added to increase ductility and shear capacity.

Underground tunnel structures undergo 3 primary modes of deformation during seismic shaking: ovaling/racking, axial, and curvature deformations. The ovaling/racking deformation is caused primarily by seismic waves propagating perpendicular to the tunnel longitudinal axis. Vertically propagating shear waves are generally considered the most critical type of waves for

RFP No.: 13-57 – Addendum No. 5 - 10/09/2014

this mode of deformation (Figure 10-9). The axial and curvature deformations are induced by components of seismic waves that propagate along the longitudinal axis (Figure 10-10).

Figure 10-9: Tunnel Transverse Ovaling and Racking Response to Vertically Propagating Shear Waves

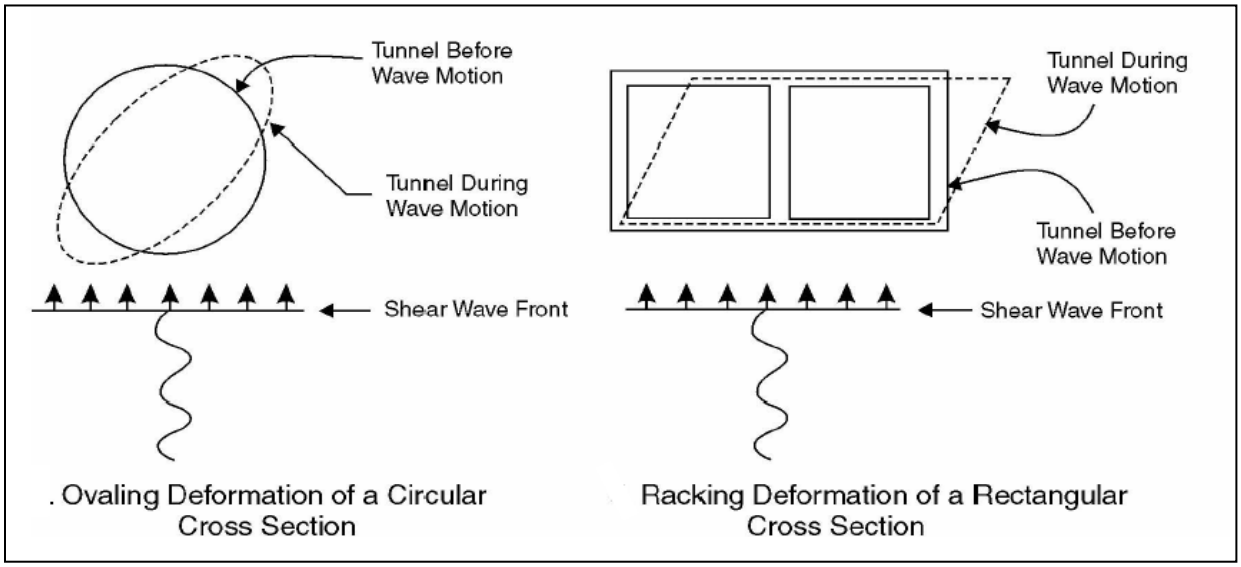

Figure 10-10: Tunnel Longitudinal Axial and Curvature Response to Traveling Waves

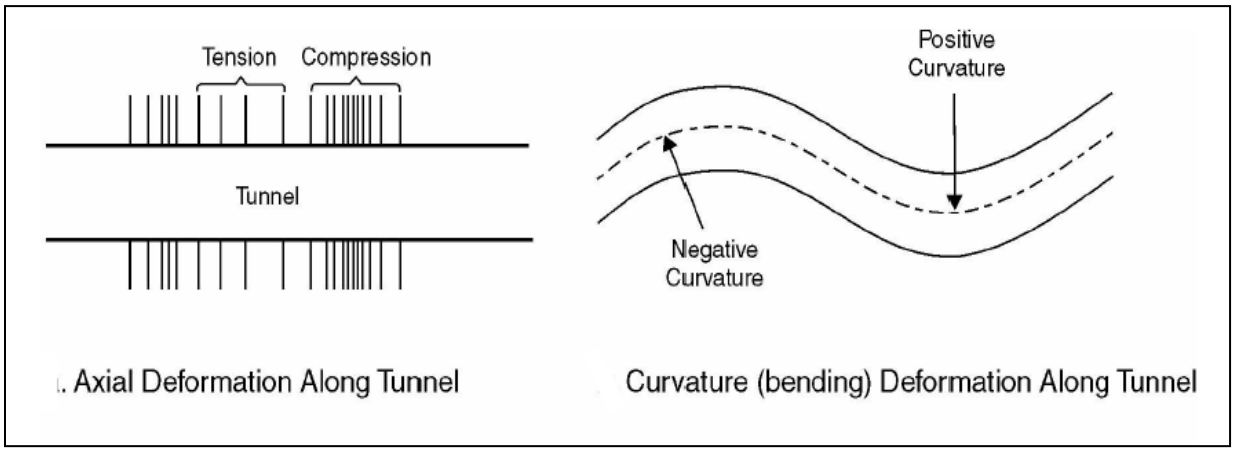

RFP No.: 13-57 – Addendum No. 5 - 10/09/2014

10.13.5 Effect of Ground Deformation

10.13.5.1 Transverse Ovaling Deformations

For bored circular tunnels, using either the precast concrete segmental lining or cast-in-place concrete lining, there are 2 general approaches to determining the effects of seismic ovaling deformation.

The first approach is based on closed form solution that accounts for soil-structure interaction effect. The closed form solution is based on the following assumptions: (1) the tunnel is of completely circular shape (without decks or walls inside) with uniform lining section, (2) surrounding soil is uniform, and (3) there is no interaction effect from adjacent tunnels or other structures.

The second approach is a numerical modeling approach that relies on mathematical models of the structures (including adjacent structures if relevant) to account for structural properties, varying soil stratigraphy and properties, loadings and deformations more rigorously. These structural models are generally run on computers with specialized software. If the actual soil-structure systems encountered in the field are more complex than the assumed conditions described above for the closed form solution approach (which could lead to unreliable results), then the numerical modeling approach shall be adopted.

Refer to FHWA-NHI- Report, "Technical Manual for Design and Construction of Road Tunnels", Chapter 13 for general guidelines on transverse ovaling analysis for bored tunnels.

10.13.5.2 Transverse Racking Deformations

For box type underground structures such as cut-and-cover tunnels and stations, and mined station sections that behave in similar manner as a rectangular structure during earthquake shaking, seismic design of the transverse cross section of the structure shall consider 2 loading components:

- The racking deformations due to the vertically propagating shear waves, which are similar to the ovaling deformations of a circular tunnel lining (refer to Figure 10-9)
- Inertia forces due to vertical seismic motions

There are 2 general approaches to determining the effects of seismic racking deformations:

The first approach is based on semi-closed form solution that has been calibrated with a series of numerical analyses for a number of soil-structure configurations. The semi-closed form solution is based on the following assumptions: (1) the tunnel is of rectangular shape, (2) surrounding soil is reasonably uniform, and (3) there is no interaction effect from adjacent tunnels or other structures.

The second approach is a numerical modeling approach that relies on mathematical models of the structures (including adjacent structures if relevant) to account for structural properties, varying soil stratigraphy and properties, loadings and deformations more rigorously. These

RFP No.: 13-57 – Addendum No. 5 - 10/09/2014

structural models are generally run on computers using specialized software. If the actual soil-structure systems encountered in the field are more complex than the assumed conditions described above for the semi-closed form solution approach leading to unreliable results, then the numerical modeling approach shall be adopted.

Refer to FHWA-NHI-09-010 Report, "Technical Manual for Design and Construction of Road Tunnels", Chapter 13 for general guidelines on transverse racking analysis for box type structures.

10.13.5.3 Longitudinal Axial/Curvature Deformations

The evaluation procedures for the longitudinal response (due to axial/curvature deformations) of tunnel structures shall be based on the procedures outlined in Section 13.5.2 of the FHWA-NHI-09-010 Report, "Technical Manual for Design and Construction of Road Tunnels". The Free-Field Deformation procedure in section 13.5.2.1 of the Road Tunnel Manual may be used to evaluate the strains related to axial and longitudinal deformation of the tunnel under seismic ground motions. Supplement the analysis with Numerical Modeling Approaches similar to those in Section 13.5.2.3 of FHWA-NHI-09-010 where there are abrupt changes in structural stiffness or geological properties.

For the Free-Field Deformation analysis, the combined axial and bending strains shall be calculated from the P-Waves (primary waves), S-Waves (shear waves), and R-Waves (Rayleigh waves) using the formulae given in Section 13.5.2.1 of FHWA-NHI-09-010. The parameters associated with each class of wave are to be developed and provided by the Geotechnical Engineer/Seismologist.

Numerical modeling approach shall be used to investigate the effects of abrupt changes in structural stiffness or geological properties. Structural stiffness change locations can include the tunnel breakouts at the portals; where egress and ventilation shafts may join the tunnel; and other local hard spots. Geological changes requiring numerical modeling include areas of abrupt change in soil stiffness along the alignment. These include the interfaces between liquefiable and non-liquefiable soils and the interfaces between soft soil and rock.

The effect of spatial variations of ground motions on long structures resulting from the effects of wave passage and local soil overburden shall be considered. The wave-passage effect results from different arrivals of seismic waves at different parts of the structure. The wave-passage effect can be accounted for by assuming a time lag of the ground-motion time histories between any 2 locations along the tunnel alignment. This time lag can be estimated by dividing the distance between the 2 locations by the horizontal wave travelling velocity (in the ground) VH = 2 km/seconds along the tunnel alignment.

The effect of local soil overburden is specified in Section 10.13.4.

RFP No.: 13-57 – Addendum No. 5 - 10/09/2014

10.13.5.4 Site Response Analysis

Variations of local site conditions at different locations along the proposed tunnel alignment will have a major effect on the seismic response of the tunnel structures. The requirements and guidelines for evaluating the local site response effect on design ground motions are defined below.

Site response analyses shall be based on numerical modeling of the soil layering configuration, using site-specific soil properties along the tunnel alignment. Conventional numerical analysis software packages should be used for this process as applicable to the site specific requirements for the response analysis. Examples of commercially available software that may be appropriate include: SHAKE; PROSHAKE; SHAKE2000; DMOD; DEEPSOIL, and FLUSH.

Several analysis methods are available for evaluating the effect of local soil conditions on ground response during earthquakes. The following shall be used:

- The equivalent-linear one-dimensional total stress method
- The non-linear one-dimensional total and effective stress method
- The two-and three-dimensional equivalent-linear total stress methods
- The two- and three-dimensional non-linear total and effective stress methods

The one-dimensional site response analysis described above can be used for developing a ground displacement profile for the evaluation of the ovaling/racking effects on the seismic behavior of a tunnel's transverse section

To evaluate the tunnel's seismic performance in the longitudinal direction, the effect of subsurface variability in soil conditions along the tunnel alignment must be taken into consideration. When the soil/rock strata are highly variable and not horizontally layered, response analysis shall be performed with two-dimensional or three-dimensional modeling techniques.

For any numerical programs to be used (e.g., by finite element or finite difference methods), the Geotechnical Designer shall, prior to final design of any structural elements, verify the accuracy of such programs by a written report and with calculations that explain the theory, the input values, and the results.

10.13.6 Soil-Structure Interaction for Bridges, Aerial Structures, and Grade Separations

For bridges, aerial structures, and grade separations, the following primary soil-structure interaction (SSI) effects shall be considered:

- The influence of foundation stiffness on structural response
- The inertial structural loads imparted to the foundation system – termed as the inertial effect

RFP No.: 13-57 – Addendum No. 5 - 10/09/2014

- The ground displacement loads imparted to the foundation system (resulting from both free-field soil displacement and ground-failure conditions such as lateral spreading or permanent seismically-induced embankment/slope movements if applicable) – termed as the kinematic effect

The soil-foundation-structure interaction problem can be solved using either a coupled or uncoupled analysis. The coupled analysis examines the behavior of the entire soil-foundation-structure system simultaneously in a single, complex model, in which non-linear soil behavior is described by a continuum model and/or non-linear soil springs (e.g., p-y, t-z, and q-z). In the uncoupled analysis, the effect of foundation stiffness on structural response is examined by replacing the foundation in the structural model with a set of springs (or stiffness matrix).

At a minimum, the soil-foundation-structure interaction effects shall be considered using the uncoupled approach using the stiffness matrix approach. In the event that a more detailed representation of the complex interactions between the superstructure, foundation, and the surrounding soil is required, a fully coupled analysis shall be conducted.

10.13.6.1 Pile/Drilled Shaft Design Subject to Ground Displacements

Ground displacement loading can be divided into 2 categories: (1) free-field ground displacement, and (2) displacement due to unstable ground such as liquefaction induced lateral spread or unstable embankments/slopes. Ground displacements impose forces acting along the length of the piles and pile cap and therefore shall be considered in the design. For the free-field ground displacements, the resulting forces can be estimated by imposing the estimated free-field ground displacement profile on the pile through p-y springs. Proper selection of the non-linear p-y properties of the surrounding soil is crucial for the design. The displacement profile can be estimated from a site response analysis. In competent sites, the free-field ground displacements generally do not govern the pile design because the curvature of the ground displacement is small. This effect, however, has to be considered for piles in soft soils and for sudden changes in soil stiffness with depth. The effect is particularly significant for large diameter piles or drilled caissons in soft soils.

Similarly, seismic soil instability resulting from geotechnical seismic hazards can produce large soil movements adversely affecting the performance of deep foundations. The p-y procedure described above is also applicable for this case. The ground displacements resulting from unstable ground require detailed analysis using site-specific data and shall be provided by the Geotechnical Designer.

The overall evaluation procedure for pile design in liquefied soil deposits would essentially be the same as that described above. However, the choice of p-y characteristics must properly consider liquefaction effects of the soils.

The LPILE computer program has the ability to impose a soil displacement profile against the pile by adjusting the location of the base of the soil springs (p-y). For calculation of loads and deformation demands on bridge foundations and abutment resulting from liquefaction induced

RFP No.: 13-57 – Addendum No. 5 - 10/09/2014

spreading ground, refer to Caltrans Guidelines on Foundation Loading and Deformation Due to Liquefaction Induced Lateral Spreading (2011).

10.13.6.2 Effective Support Motions

Due to the complex interaction between soil, pile, and structures, the effective support motions (i.e., the near field ground motions) at the foundation/structure interface differ from those in the free field. For regular shallow footings and flexible pile-supported footings (relative to the surrounding ground), the use of free-field motions as the support motions in the structure response analysis is reasonable. For very large and stiff foundations, such as large gravity caissons, very stiff battered pile groups, or large diameter drilled shaft foundations, the effective support motions at the foundation/structure interface may differ considerably from the free-field motions. When this situation occurs, a more refined analysis taking into account the presence of the foundation and the soil-pile/shaft kinematic interaction effect shall be performed to derive the effective support motions.

10.14 Track Structure

A railway track structure is composed broadly of track-structure and formation. The track structure consists of rails, sleepers, and fastenings or non-ballasted track, while the formation of a track (ballasted track) is typically composed of ballast, subballast, filled/placed soil and the native ground or the subsoil. The filled/placed soil and the subsoil serve as a platform on which the track structure is constructed and are to provide a stable foundation for the subballast and ballast layers. Because of higher train speeds, dynamic forces and axle loads, design of HSR track structure requires higher and more stringent design standards than conventional railway track structure.

The track structure is subjected to cyclic loading due to high-speed train loads. Additionally, the high-speed train load also induces stress due to dynamic effect. The cyclic loading may result in progressive building or pore pressure causing large cumulative strains. The bearing capacity of the track structure has to consider not just a single load application but repeated loading as the allowable stress under repeated loading is much higher than under the static loading.

Design of track structures for trains at speeds greater than 160 mph shall consider the Rayleigh waves induced vibration due to high-speed trains (Section 10.14.3). When the speed of the high-speed train approaches the critical wave velocities in the track-ground (earth) system, large transient movements of the rail and ground will result, causing large rail deflections and formation instability as well as structural vibrations and associated noise in nearby buildings.

10.14.1 Formation Supporting Ballasted Tracks

Formation, for this project, defined as layers comprising subballast, prepared subgrade, and earth fill, provides the base for ballasted track which is composed of rail track and ballast. The formation shall be designed to be safe against shear failure, and accumulated/plastic

RFP No.: 13-57 – Addendum No. 5 - 10/09/2014

deformations under repetitive axle loads of the trains as stated in this chapter. The subballast and prepared subgrade provide support to the ballasted track and bear additional stresses due to static and dynamic effects of moving wheel loads. The load is transmitted through the subballast, prepared subgrade, and earth fill to foundation soils.

The ballast under the rail track serves as a stress disperser. Below the ballast is the subballast overlying the prepared subgrade. This subballast layer (also referred to as the blanket layer in the UIC standards) shall be of adequate thickness to reduce the induced stresses to an acceptable level at the top of prepared subgrade to avoid shear failure. The subballast shall have adequate strength under dynamic loads and vibrations, high resilient modulus, reasonable plastic strain accumulation characteristics under repeated wheel loads, etc. Therefore, the material shall be permeable enough to avoid any positive pore pressure build-up under repeated load. It shall consist of durable particles and should not be sensitive to moisture content. In addition, it shall resist break-down and abrasion from cyclic stresses produced by the train repetitive loading.

- **Subballast** – The subballast shall conform to the following design requirements:
  - It shall be coarse, granular, and well graded as per Standard Specifications.
  - Gap-graded material shall not be permitted.
  - It shall meet the minimum Resistance (R-value), Sand Equivalent and Durability Index requirements set forth in Standard Specifications.
- **Prepared Subgrade** – Below the subballast is the prepared subgrade layer, which in its most complete form, has a cross slope. It shall consist of imported or treated material depending of the quality of the upper part of the embankment or the bottom of the cut. In addition, it shall have a gradation as specified on Figure 10-6. Its deformation modulus, E_{v2}, from the 2nd loading in the plate load test shall not be less than 11,500 psi.
- **Earth Fill** – Underlying the prepared subgrade is the fill (embankment fill/retaining structure backfill) on top of the existing foundation soils. This earth fill shall be designed against slope failure and settlement/deformation as provided earlier in this chapter.

10.14.2 Determination of the Thickness of the Trackbed Layers

Trackbed layers are composed of ballast and subballast that are placed on top of the prepared subgrade overlying earthfill or existing subgrade. The dimensioning of trackbed layers shall take into account both the following:

- Desirable bearing capacity
- Problems of frost penetration

The total thickness (ballast layer plus sub-ballast layer) varies according to the following:

- Bearing capacity of the prepared subgrade

RFP No.: 13-57 – Addendum No. 5 - 10/09/2014

- Level of frost protection required
- Type of tie and the tie spacing
- Traffic characteristics (tonnage supported, axle-load, and speed)

The thickness of the ballast varies depending on the train types, sleeper types, or whether non-ballasted tracks are used. The minimum thickness of subballast shall be 9 inches. For the prepared subgrade, a minimum thickness of 14 inches is required for ballasted tracks, whereas, a minimum thickness of 6 feet-6 inches of prepared subgrade is required for support of non-ballasted tracks unless otherwise stated in Section 10.9.5.7.

10.14.3 Design of Formation for Dynamic Loading from HST Operations

Knowledge of cumulative plastic deformation for foundation soils under repeated loading is essential for the proper design of HST tracks. Excessive foundation soil plastic deformation will produce high maintenance costs and undesirable ride quality.

Design methods of formation, particularly for subballast thickness, are used in different railway systems. They are based on different properties of soil used in embankment construction that governs the behavior of the soil (viz. percentage of fines less than 75 microns) present in the soil, CBR value of the soil, undrained shear strength of the soil, etc. Methods such as the Association of American Railroads (AAR) method (Li and Selig, 1998) may be used for design of the formation.

10.14.3.1 Rail Deflections

Rail deflections as a result of dynamic amplification due to high-speed trains shall be considered. These deflections are a function of (1) axle load of the train, (2) thickness of the embankment fill, (3) elastic properties of the sub-soil/foundation subgrade and the damping in the system, (4) train speed, and (5) both upward and downward rail deflections during the train passages. At certain speeds of the train, "resonance" phenomena may cause rail deflections that are far larger than the static values.

Rail deflections induced by high-speed trains as a result of the dynamic amplification shall not exceed 1/12-inch and 1/6-inch for non-ballasted and ballasted trackways, respectively. These deflections are elastic and reversible after train passage. Plastic deformations induced by repeated high-speed (up to operating speed of 220 mph) train loads for non-ballasted and ballasted trackways shall be limited to 1/8 inch and 1/4 inch, respectively for its design life. These plastic deformations will be irreversible and remain after the train loads are removed. Deformation analyses using numerical modeling such as ADINA, ABAQUS, ANSYS, or PLAXIS, etc. shall be performed to verify the rail deflections are within the required limits. If such limit cannot be achieved, consideration shall be given to increasing the thickness/stiffness of the prepared subgrade, subballast/bearing base layer and/or stabilizing the foundation subgrade.

RFP No.: 13-57 – Addendum No. 5 - 10/09/2014

10.14.3.2 Existing Embankments/Retaining Structures over Soft Grounds

In addition to checking against shear/bearing failure, design of high-speed train track formation over existing embankments underlain by soft and compressible ground shall be performed to evaluate the structural integrity of the formation supporting the trackways. As mentioned in Section 10.9.5.6, for high-speed railway, the running train produces compressive (P) waves, shear (S) waves, and Rayleigh (R) waves, of which Rayleigh waves – moving parallel to the surface, are the primary source of vibration energy carried away from the source and are less prone to geometric attenuation than P- and S-waves. The propagation of vibration is dependent on the source frequency and soil properties such as stiffness, depths of strata and damping. Stiff soils have high velocity, high frequency, shorter wave characteristics, while soft soils are the converse of the above. For embankment stability, the Rayleigh wave-induced vibration by the high-speed train is an important factor to be considered for design, especially for existing embankments over soft, compressible grounds.

The velocity of a high-speed train may approach or exceed the characteristic wave velocity of the dynamic system comprising the underlying soft ground, the formation, and the moving load. As the train's velocity reaches some "critical velocity", large deformations may occur. These motions could be dangerous for the train and the integrity of the track structure, and potentially costly in terms of track maintenance and performance. It is therefore vital to design the embankments which provide a dynamic stiffness that will limit track deflections to acceptable levels (refer to Section 10.14.3.1).

For design, the critical velocity of the embankments/retaining structures shall exceed 1.7 that of the design speed of the train.

Analytical methods such as a simple elastic beam model and modern numerical modeling using Finite Element Methods (FEM) such as ADINA, ABAQUS, ANSYS, or PLAXIS shall be used to model train-induced dynamic motion. Of these methods, the Winkler model can be used as a screening process as it is a very prevalent and simple numerical model. If this screening process confirms that the required critical velocity of the embankment or retaining wall meets the design value, then the numerical modeling can be waived. However, sophisticated FEM modeling shall be used for evaluation of high-speed train induced vibration on embankments over soft and compressible grounds.

In the Winkler model, the embankment/rail/foundation material structure is simplified as a beam on an elastic or visco-elastic foundation, represented by a series of discrete springs and dashpots. The solution of the model may be used to calculate the critical velocity (V_{cr}) (Kenny, 1954) that is equal to:

$$V_{cr} = \sqrt[4]{\frac{4kEI}{\rho^2}}$$

Where k = Spring constant per unit length of the beam;
E = Modulus of elasticity of beam;

RFP No.: 13-57 – Addendum No. 5 - 10/09/2014

I = Moment of inertia of beam; and
ρ = Mass per unit length of beam

10.14.3.3 Drainage of Track and Formation

Drainage requirements for non-ballasted sections of track, as well as surface drainage in general, are described in the *Drainage* chapter.

Water contained in the formation layers cause detrimental conditions in the track. Therefore, it is necessary to contain and reduce water content in the formation layers by the following measures:

- Removal of vegetation growth on surface
- Cleaning ballast bed and establishing cross fall slope at top of formation, subballast, and prepared subgrade/subgrade layers
- Provision of longitudinal drains and drainage outfall facilities
- Arrangement of lateral side drainage facilities

10.15 Maintenance of Geo-Structures

For the CHSTP, a Reliability, Availability and Maintainability (RAM) Program has been established. One of the key components of this program is maintainability. The RAM program requires each contractor to establish a Contractor's RAM Program Plan for the Contractor's scope of work. The Contractor's RAM Program Plan goals shall include establishing provisions for safeguarding continual performance of geo-structures including, but not limited to, embankments, retaining walls, slopes, underground (cut-and-cover) structures, trenches, tunnels, culverts, etc. The design of geo-structures shall consider long term maintenance issues including, but not limited to (1) consideration of closing roads for maintenance of retaining walls, bridges, embankments, (2) difficult access for maintenance of elements in a cut-and-cover section, (3) lack of or limited access to remove rock debris from rock slopes, etc. These and similar issues shall be included in the Contractor's RAM Program Plan, considered and addressed in the design, and shall constitute an integral part of the final design of the geo-structures to mitigate aforementioned maintenance and maintenance access concerns.

10.16 References

1. Anderson, D. G., G. R. Martin, I. P. Lam, and J. N. Wang. (2008). *Seismic Analysis and Design of Retaining Walls, Slopes and Embankments, and Buried Structures*, NCHRP Report 611. National Cooperative Highway Research Program, Transportation Research Board, National Research Council, Washington, DC.

RFP No.: 13-57 – Addendum No. 5 - 10/09/2014

2. Bray, J. D., Travasarou, T., and Zupan, J. (2010). "Seismic Displacement Design of Earth Retaining Structures." *Proceedings, Earth Retention Conference 3*, Bellevue, Washington, August 1-

3. Clough, G. W. and T. D. O'Rourke, 1990, Construction Induced Movements of In Situ Walls, Design and Performance of Earth Retaining Structures, Proceedings of a Specialty Conference at Cornell University, ASCE, New York, 439-470.

4. Fellenius, B. H. (2004). "Unified Design of Pile Foundations with Emphasis on Settlement Analysis." Honoring George G. Goble – Current Practice and Future Trends in Deep Foundations, Proceedings, Geo-Institute Geo TRANS Conference, ASCE GSP 125, ASCE, Reston, 253-275.

5. Fellenius, B. H. (2006). "Results from Long-term Measurement in Piles of Dragload and Downdrag." Canadian Geotechnical Journal, 43(4), 409-430.

6. Fellenius, B. H. and Siegel, T. C. (2008). "Pile Drag Load and Downdrag in a Liquefiable Event." Journal of Geotechnical and Geoenviromental Engineerig, ASCE, September, 1412-1416.

7. Kenny, J. T. (1954). "Steady-State Vibrations of Beam on Elastic Foundation for Moving Load." Journal of Applied Mechanics, December.

8. Li D., and Selig, E. T. (1998). "Method for Railtrack Foundation Design I: Development," Journal of Geotechnical/Geoenvironmental Engineering, Vol. 124, No. 4, pg 316-322.

9. Sherard, J. L., Dunnigan, L. P., and Talbot, J. R. (1984a). "Basic Properties of Sand and Gravel Filters," Journal of the Geotechnical Engineering Division, ASCE, June, pp. 684-700.

10. Sherard, J. L., Dunnigan, L. P., and Talbot, J. R. (1984b). "Filters for Clays and Silts," Journal of the Geotechnical Engineering Division, ASCE, June, pp. 701-718.

RFP No.: 13-57 – Addendum No. 5 - 10/09/2014

Appendix 10.A: Guidelines for Geotechnical Investigations

10.A.1 Purpose

These guidelines represent the preferred, but not necessarily the only actions required for the development of additional geotechnical investigations. These guidelines convey a minimum standard of care in performing geotechnical investigations and are not intended as prescribed site investigation criteria or checklists.

10.A.2 Geotechnical Investigation Guidelines

Geotechnical investigations are to be performed by a Geotechnical Designer in collaboration with an Engineering Geologist, both of which are licensed in the State of California. The level of geotechnical investigation performed shall consider the engineering needs and amount of information necessary to achieve performance criteria, complete the design, and mitigate construction risks. Guidelines for advancing the geotechnical investigations are described in the following sections.

The Geotechnical Designer/Engineering Geologist shall be required to present the investigation results in a Geotechnical Data Report (GDR) document that contains the factual information/ data gathered during the geotechnical investigations. The GDR shall minimally contain the following information:

- Summary and reference to separate geologic hazards report
- Description and discussion of the site exploration program, including specific goals and objectives
- Logs of borings, trenches, and other site investigations
- Description and discussion of field and laboratory test programs
- Results of field and laboratory testing

The high cost component of geotechnical investigations is borehole drilling; therefore, planning of the geotechnical investigations shall maximize the use of existing geologic and subsurface data, and optimize the use of geophysical testing and Cone Penetration Tests (CPTs) where warranted in order to minimize the amount and cost of drilling required and still achieve a level of knowledge commensurate with good engineering practice and judicious judgment for similar locations and applications. Geotechnical investigations shall not begin until project specific information is gathered as set forth in the following sections.

10.A.2.1 Standards and Key Geotechnical Investigation Reference Documents

The ASTM test methods, Caltrans Manual, and FHWA manuals are considered the most comprehensive and applicable guideline documents for geotechnical investigation of the

RFP No.: 13-57 – Addendum No. 5 - 10/09/2014

CHSTP as well as federal transportation projects. Chapter 6 of the 2008 FHWA Project Development and Design Manual (PDDM) provides an overview of practice for geotechnical work and direction for understanding policies and standards for geotechnical work performed by the Federal Lands Highway (FLH) Office of FHWA. The PDDM also provides a portal to technical information and presents a high-level source of technical guidance with regard to what needs to be accomplished. The corresponding 2007 FHWA Geotechnical Technical Guidance Manual (GTGM) provides guidance as to how the work shall be done. The GTGM also provides guidance for activities where standards and standard practices do not exist and provides access to and guidance for the use of new technologies. Chapter 3 of FHWA-NHI-09-010 presents good geotechnical investigation techniques and parameters for planning, design, and construction of road tunnels. For soil and rock logging, classifications, and presentation, refer to 2010 Caltrans Soil and Rock Classification, Classification, and Presentation Manual.

10.A.2.2 Geotechnical Investigation Goals

The goals of geotechnical investigations project are as follows:

1. Perform additional subsurface investigations to supplement existing geotechnical data for design of structural elements including bridges, retaining walls, at-grade structures, cut-and-cover tunnels, large culverts, mast arm supports (OCS, signals), wayside equipment, and signs along the proposed alignment.
2. Identify the distribution of soil and rock types within the project limits and assess how the material properties will affect the final design and construction of the project elements.
3. Define the groundwater and surface water regimes, especially, the depth, and seasonal and spatial variability of groundwater or surface water within the project limits. The locations of confined water-bearing zones, artesian pressures, and seasonal or tidal variations shall also be identified.
4. Identify and characterize any geologic hazards that may be present within or adjacent to the project limits that may impact construction or operation of the project (e.g., faults, landslides, rockfall, debris flows, liquefaction, soft ground or otherwise unstable soils, seismic hazards). These items are vital pieces of the overall geotechnical exploration process, and the investigators must ensure that these elements are addressed.
5. Assess surface hydrological features (infiltration or detention facilities) that are required for the project, as well as evaluate pond slope angle and infiltration rates to enable estimation of the size and number of those facilities.
6. Identify suitability of onsite materials as fill and/or the suitability of nearby materials sources.

RFP No.: 13-57 – Addendum No. 5 - 10/09/2014

7. For structures including bridges and cut-and-cover tunnels, large culverts, signs, signals, walls, or similar structures, provide adequate subsurface information for final design and construction.

8. For tunnels, trenchless technology, or ground improvement, provide adequate information to evaluate the viability of construction methods and potential impacts to adjacent facilities.

9. For landslides, rockfall areas, and debris flows, provide adequate information to evaluate stabilization or containment methods for design and construction.

10. Develop design soil properties for engineering evaluations, including dynamic analysis to evaluate response associated with rail operations and seismic events.

11. Perform chemical assessment of groundwater and soil for the impact evaluation of existing soil and groundwater on foundation materials.

12. Substantiate the various baselines expressed in the Geotechnical Baseline Report for Bidding (GBR-B), consider those baselines in the development of the design and construction approaches, and fill in any missing information in the GBR-B accordingly to develop a Geotechnical Baseline Report for Construction (GBR-C).

10.A.2.3 Sequence of Geotechnical Investigations

Details on performing geotechnical investigations are provided in Section 10.A.2.4 and shall follow the general sequence listed below.

1. Review the scope of project requirements to obtain a clear understanding of project goals, objectives, constraints, values, and criteria. This information may consist of the following:
   - Project location, size, and features
   - Project element type (bridge, tunnel, station, embankment, retaining wall, etc.)
   - Project criteria (alignments, potential structure locations, approximate structure loads, probable bridge span lengths and pier locations, and cut and fill area locations)
   - Project constraints (context-sensitive design issues, right-of-way, environmental and biological assessments and permitting)
   - Project design and construction schedules and budgets
2. Review the available geologic and geotechnical data.
3. Initiate and prepare geotechnical investigation plans. Identify the anticipated required analyses and key engineering input for the final design and construction.
4. Perform field reconnaissance and geological mapping.
5. Finalize the Geotechnical Investigation Plan (GIP) and submit it to the Authority.

RFP No.: 13-57 – Addendum No. 5 - 10/09/2014

6. Obtain permits and rights-of-entry.
7. Perform exploration and laboratory testing for final design.
8. Compile and summarize data for use in performing engineering analyses, and prepare geotechnical data reports, geotechnical engineering reports, and geotechnical baseline report for construction.

10.A.2.4 Planning Geotechnical Investigations

The planning process for geotechnical investigations requires evaluating the appropriate number, depth, spacing, and type of exploration holes, as well as sampling intervals and testing frequencies. The involvement of engineering geologists (supporting the Geotechnical Designer) is critical throughout the investigation process, from initial exploration planning through the characterization of site conditions, to assure consistency for geologic interpretation of subsurface conditions in support of developing parameters for use in phased engineering design and construction.

The geotechnical investigation program shall be carried out in phases, as appropriate to efficiently and cost-effectively characterize the project site(s).

10.A.2.4.1 Desk Study

All relevant available information on the project site shall be reviewed. Available data may consist of reports, maps, journal articles, aerial photographs, historical records of previous investigations by agencies, as-built plans from construction of existing facilities, and communication with individuals with local knowledge. A Preliminary Geologic Hazards Report shall be prepared by a California Certified Engineering Geologist (CEG) in advance of geotechnical investigations. The report shall be reviewed and utilized as a basis for geologic characterization and potential geologic hazards, and for identifying proposed subsurface exploration points. The results of the geologic and seismic hazard evaluation shall be shared with the Geotechnical Designer to inform the final design. Other sources of available information include the California Geological Survey (CGS), the United States Geological Survey (USGS), Caltrans archived Logs of Test Borings (LOTBs), the GIS database developed as part of the CHSTP, and data in individual city and county records and archives.

10.A.2.4.2 Field Reconnaissance

Field reconnaissance shall be conducted jointly by the Geotechnical Designer and the CEG after the desk study is completed. The following factors shall be evaluated by the field reconnaissance:

- **Geologic Report Reviews –** The Geotechnical Designer and Engineering Geologist responsible for the geotechnical investigations shall review and become familiar with geologic site characterizations and any identified geologic hazards provided in geologic hazards evaluation reports.

RFP No.: 13-57 – Addendum No. 5 - 10/09/2014

- **Environmental Considerations –** Potential impacts the project may have on subsurface materials, landforms, and the surrounding area shall be identified, and assessed to evaluate if project areas are governed by special regulations or have protected status.
- **Explorations –** The type(s) and amount of exploration and the kinds of samples that would best accomplish the phased project needs shall be evaluated.
- **Drilling Logistics –** The type, approximate locations, and depths of geotechnical explorations shall be defined, and approximate routes of access to each exploration location shall be evaluated. Make note of any feature that may affect the geotechnical investigation program, such as accessibility, structures, overhead utilities, evidence of buried utilities, or property restrictions. Evaluate potential water sources for use during borehole drilling operations. Evaluate potential concerns that may need to be addressed while planning an exploration program (permits, buried or overhead utilities clearance, equipment security, private property, etc.).
- **Permits –** The various types of permits that may be required shall be assessed, and all applicable jurisdictions shall be considered, which could include partner agencies, adjoining properties including railroads, Caltrans, regulatory agencies, and state and local government agencies. Local government agencies requirements could include regulations, codes, and ordinances from city, county, and departments of public works having jurisdiction. Permits could include right-of-entry, drilling and well permits, special use permits, lane closure and traffic control plans, utility clearances, etc.

10.A.2.4.3 General Subsurface Profiles

The general subsurface profiles, once developed, will present the overall geologic conditions along the project site. Profiles should be parallel to the rail alignment, but also perpendicular in locations of major structures where future project facilities (e.g., stations or ancillary facilities) or important geologic conditions (e.g., geologic hazards needing definition) extend perpendicular to the alignment. Evaluation of these areas will allow the Geotechnical Designer (in collaboration with the Engineering Geologist) to identify the locations of supplementary explorations for final design and construction.

10.A.2.4.4 Carry Out Geotechnical Investigations In Stages

For areas where there are no existing subsurface investigation data, conduct geophysical testing such as Spectral Analysis of Surface Wave (SASW), Multi-channel Analysis of Surface Wave, (MASW), Suspension PS Logging, Cross-hole Seismic Logging, seismic refraction tests, seismic reflection tests, or a combination of the above to measure shear wave and P-wave velocities in situ and to generalize the subsurface conditions prior to drilling CPTs and borings. The sequence of site investigation shall be as follows:

1. **Geophysical testing –** To evaluate the general subsurface conditions for areas with no available existing geologic data.

RFP No.: 13-57 – Addendum No. 5 - 10/09/2014

2. **CPTs –** To confirm the general subsurface conditions with measurements of pore water pressure and shear wave velocities with depth by means of using a combination of seismic cones, CPT_u, and CPTs.
3. **Borings –** To refine the general subsurface conditions after CPTs are performed. Install observation wells or piezometers and inclinometers where necessary to confirm groundwater table levels, seasonal fluctuations in groundwater levels, and ground movement in the field. Perform suspension PS logging or cross-hole seismic logging at deep boreholes (180 feet or deeper) where structures will be located over river crossings or unusual geologic conditions[13], and other boring locations selected by the Geotechnical Designer in collaboration with the engineering geologist.

10.A.2.5 Surface Explorations

Standards for surface exploration methods are provided in PDDM Section 6.3.2.2, and technical guidance is provided in GTGM Section 3.2.2. Geologic field mapping of surficial soil and rock units and measurements of rock discontinuities shall begin by observing, measuring, and recording of exposed rock structure data at existing road cuts, drainage courses, and bank exposures, as well as portal locations where profiles transition from underground segments to elevated structures or at-grade reaches. Where rock exposures exist, mapping shall include initial characterization of rock mass rating, weathering, texture, overall quality, and discontinuity orientation, spacing, and physical characteristics.

The objective of these observations and data collection efforts is to confirm the general types of soil and rock present, and topographic and slope features. For rock slopes, stability of slopes and the rockfall history are important indicators of how a new slope in the same material will perform. In addition to plotting data on a site plan or large-scale topographic map, preparation of field-developed cross sections is a valuable field method.

10.A.2.6 Subsurface Explorations

Relative advantages (economy, data quality, data collection time) of various methods of subsurface investigation should be considered in selecting the exploration plan. For example, geophysical methods and CPTs, which are relatively cheap and faster in operations, shall be conducted first, then followed by conventional test borings in specific situations.

---

[13] Unusual Geologic Conditions – Structures that are subject to and founded on the following geologic conditions:

- Soft, collapsible, or expansive soil
- High groundwater table (within 5 feet below ground surface)
- Soil having moderate to high liquefaction and other seismically induced ground deformation potential
- Soil of significantly varying type over the length of the structure
- Fault Zones
- Unusual geologic conditions shall be defined within the Geotechnical Reports.

RFP No.: 13-57 – Addendum No. 5 - 10/09/2014

Standards for performing subsurface explorations are provided in PDDM Section 6.3.2.2, and technical guidance is provided in GTGM Section 3.2.2. A guideline for the type of equipment and frequency of use for various types of investigations is presented in GTGM Exhibit 3.2-E. Additional guidance is contained in Caltrans (2007) logging manual.

The scope of investigation shall reflect the anticipated subsurface and surface conditions and the preliminary results presented in the GDR during the bidding phase. Some factors that may impact the prioritization (sequence order ranking), method, number, and depth of subsurface explorations include the potential geologic hazards identified; geology (soil and rock units); landslides; slope stability; rockfall; rip-ability; fill suitability; expansive soils; compressible or collapsible soils; groundwater and hydrogeology; ground-borne vibration and noise transmissivity; erosion; temporary shoring; and excavation slopes. The level of investigation, priority, and scope of work for each component shall be developed in accordance with these geotechnical investigation guidelines.

- **Geophysical Methods** – Spectral Analysis of Surface Wave (SASW), Multi-channel Analysis of Surface Wave (MASW), suspension logging, or cross-hole seismic logging shall be conducted to measure in situ shear wave and primary (P) wave velocities with depth. Shear wave and P-wave velocities are the key dynamic properties for seismic design and shall be measured in situ during geotechnical investigations.

Standards for geophysical methods are provided in PDDM Section 6.3.2.3.2. The primary source supporting the guidance is FHWA DTFH68-02-P-00083 Geophysical Methods Technical Manual (2003). Secondary sources are NHI 132031 and USACE EM 1110-1-1802. Generally, geophysical methods are used as a reconnaissance investigation to cover large areas and/or to supplement information between boreholes. These exploration techniques are most useful in providing a preliminary interpretation on a large spatial scale complementary to information from borings. The methods presented in FHWA (2003) shown as Exhibit 3.2-F of the GTGM are some of the most commonly used. The reliability of geophysical results can be limited by several factors, including the presence of groundwater, non-homogeneity of soil stratum thickness, gradation or density, the range of wave velocities or other geophysical parameters within a particular stratum and the quality of the test and the experience of the testing team.

Subsurface strata that have similar physical properties can be difficult to distinguish with geophysical methods. Geophysical methods are also applicable for testing ground-borne vibration characteristics of subsurface conditions, and assessment of this is considered important for high-speed train systems. The reference document for this testing is titled, "High-Speed Ground Transportation Noise and Vibration Impact Assessment," FRA Report No. 293630-1, December 1998.

Cone Penetration Test, Seismic Cones, and Piezocone Penetrometer Test – CPT is a specialized quasi-static penetration test where a cone on the end of a series of rods is pushed into the ground at a constant rate and continuous or intermittent measurements are made of the resistance to penetration of the cone. This test can be used in sands or clays, fibrous peat,

RFP No.: 13-57 – Addendum No. 5 - 10/09/2014

or muck that are sensitive to sampling techniques, but not in rock, dense to very dense sands, or soils containing appreciable amounts of gravel, and cobble. The CPT is relatively inexpensive in comparison to borings and can be used to supplement borings since boring samples are obtained for positive identification of soil types. Piezocones are electric penetrometers that are capable of measuring pore-water pressures during penetration. When equipped with time-domain sensors, cones can also be used to measure shear wave velocity.

Tests are conducted in accordance with ASTM D 5778 (Standard Test Method for Electronic Friction Cones and Piezocone Penetration Testing of Soils). References: Guides to CPT (Robertson, 2010), TRB-NCHRP synthesis report 368 (2007), and FHWA-SA-91-043.

- **Test Borings –** Guidance for selection of the applicable exploration methods is presented in PDDM Exhibit 6.3-A (borings). Methods for exploratory borings shall be in accordance with AASHTO and ASTM standards. Detailed information on drilling and sampling methods is given in NHI132031 which lists applicable AASHTO and ASTM drilling and sampling specifications and test methods. Additional references include AASHTO MSI-1, FHWA GEC-5, FHWA-ED-88-053, National Highway Institute (NHI) 132012, NHI132035, USACE EM 1110-1-1804, USACE EM 1110-1-1906, FHWA-FL-91-002, and Caltrans (2007).

For the rotary wash drilling method, the drilling fluid in boreholes shall be kept above the groundwater level at all times. Rapid fluctuations in the level of drilling fluids shall be avoided. The boreholes shall be thoroughly cleaned prior to taking samples. Drill cuttings shall be collected and disposed of in accordance with applicable regulations.

Disturbed samples can be used for determining the general lithology of soil deposits, for identifying soil components and general classification purposes, and for determining grain size, Atterberg limits, and compaction characteristics of soils. The most commonly used in-situ test for surface investigations is the Standard Penetration Test (SPT), AASHTO T206. The use of automatic hammers for SPT is highly recommended, and drop height and hammer weight must deliver 60 percent energy so that an energy correction is not required. The SPT values obtained with non-automatic hammers are discouraged and could be allowed when calibrated by field comparisons with standard drop hammer methods. The SPT dynamic analyzer shall be used to calibrate energy of the SPT equipment at the site at least at the start of the project and bi-weekly for long-duration site investigations. More frequent use of the SPT dynamic analyzer is encouraged.

Undisturbed samples shall be obtained in fine-grained soil strata for use in laboratory testing to evaluate the engineering properties of those soils. Specimens obtained by undisturbed sampling methods may be used to develop the strength, stratification, permeability, density, consolidation, dynamic properties, and other engineering characteristics of soils. Disturbed and undisturbed samples can be obtained with a number of different sampling devices, as summarized in Table 7 of FHWA GEC-5 and Table 3-4 of NHI 132031.

RFP No.: 13-57 – Addendum No. 5 - 10/09/2014

It is the responsibility of the Geotechnical Designer to obtain enough testable samples of rock and soil to complete the laboratory testing program detailed in the GIP accepted by the Authority. The quantity of each type of test conducted shall be proposed by the geotechnical investigation consultant to adequately characterize each soil or rock unit encountered. Adequate subsurface exploration and sampling is necessary to obtain sufficient samples for adequate subsurface characterization.

- **Sandy or Gravely Soils Sampling –** The SPT (split-spoon) samples shall be taken at 5-foot intervals or at significant changes in soil strata, whichever is more frequent. Continuous SPT samples with a gap of at least 6 inch between 2 consecutive tests are recommended in the top 15 feet of borings made at locations where spread footings may be placed in natural soils. SPT bagged samples shall be sent to lab for classification testing and verification of field visual soil identification.
- **Silt or Clay Soils and Peat Sampling –** The SPT or undisturbed thin wall tube samples shall be taken at 5-foot intervals or at significant changes in strata of cohesive soils. Hydraulic (Osterberg) thin-walled piston samplers shall be used in collecting medium stiff to very soft clays. Take SPT and tube samples in same borings or take tube samples in separate undisturbed borings. Tube samples shall be sent to lab to allow consolidation testing (for settlement analysis) and strength testing (for slope and embankment stability and foundation-bearing capacity analysis). The tube samples shall be retrieved by pushing soil out in the same direction that it entered the tube (i.e., through the top of the tube sampler; do not reverse and push it back out of the bottom). Field vane shear testing is also recommended to obtain in-place shear strength of soft clays, silts, and peat.
- **Rock Sampling –** Continuous cores shall be obtained in rock using double- or triple-tube core barrels. In structural foundation investigations, core a minimum of 10 feet into rock to ensure it is bedrock and not a boulder. Core samples shall be sent to the lab for possible strength testing (unconfined compression) if for foundation investigation. Percent core recovery and rock quality designation (RQD) value shall be evaluated in field or lab for each core run and recorded on the boring log. Additional guidelines for rock coring are described later in this section and in the reference manuals.
- **Groundwater in Borings –** Water level encountered during drilling, at completion of boring, and at 24 hours after completion of boring shall be recorded on the boring log. In low permeability soils such as silts and clays, a false indication of the water level may be obtained when water is used for drilling fluid and adequate time is not permitted after boring completion for the water level to stabilize (more than 1 week may be required). In such soils, a plastic pipe water observation well shall be installed to allow monitoring of the water level over a period of time. Seasonal fluctuations of the water table shall be evaluated where fluctuation will have significant impact on design or construction (e.g., borrow source, footing excavation, excavation at toe of landslide). Artesian pressures and seepage zones, if encountered, shall also be noted on the boring log. In landslide investigations, slope inclinometer casings can also serve as water observation wells by

RFP No.: 13-57 – Addendum No. 5 - 10/09/2014

using leaky couplings (either normal aluminium couplings or PVC couplings with small holes drilled through them) and pea gravel backfill. The top 1 foot or so of the annular space between water observation well pipes and borehole wall shall be backfilled with grout, bentonite, or sand-cement mixture to prevent surface water inflow, which can cause erroneous groundwater level readings.

- **Probes, Test Pits, Trenches, and Shafts –** Guidance for selection of the applicable exploration methods is presented in PDDM Exhibit 6.3-B (probes, test pits, trenches, and shafts), and GTGM Section 3.2.3.5. The recommended primary reference is NHI 132031. Additional guidance is contained in AASHTO MSI-1 and Caltrans 2007. Exploration pits and trenches performed by hand, backhoe, or dozer allow detailed examination of the soil and rock conditions at shallow depths and relatively low cost. Exploration pits can be an important part of geotechnical explorations where significant variations in soil conditions occur (vertically and horizontally), large soil and/or non-soil materials exist (boulders, cobbles, debris) that cannot be sampled with conventional methods, or buried features must be identified and/or measured. Upon completion, the excavated test pit shall be backfilled and compacted with the excavated material or other suitable soil material, and the surface shall be restored to its previous or approved condition.
- **Soil Resistivity Testing –** The ability of soils to conduct electricity can have a significant impact on the corrosion of buried structures and the design of grounding systems. Accordingly, subsurface investigations shall include conducting appropriate investigations to obtain soil resistivity values. The following information and methodologies are recommended.
  - Soil resistivity readings shall be obtained to evaluate the electric conduction potential of soils at each traction power facility (supply/paralleling/switching station), which are spaced at approximately 5-mile intervals and at major structures, such as aerial structures and freeway overpass bridges, and at tunnel portal areas.
  - Where there is an absence of major structures between traction power facilities, soil resistivity readings shall be obtained to evaluate the electric conduction potential of soils at approximately the midpoint between facilities.
  - Where significant differences in soil resistivity values are identified at adjacent locations, additional readings shall be obtained so that an adequate basis is developed for the grounding design.
  - Resistivity measurements shall be obtained in accordance with Institute of Electrical and Electronics Engineers (IEEE) Standard 81-1983 - IEEE Guide for Measuring Earth Resistivity using the four-point method for determining soil resistivity. IEEE states that the four-point method is more accurate than the 2-point method.
- **Standards for Boring Layout and Depth –** Standards for boring layout and depth with respect to structure types, locations and sizes, and proposed earthwork are provided in these guidelines.

RFP No.: 13-57 – Addendum No. 5 - 10/09/2014

- **Standards for Sampling and Testing From Borings –** Minimum standards for disturbed and undisturbed soil and rock are presented in Exhibit 6.3-D of PDDM, and Section 3.2.3.3 of GTGM.
- **Rock Coring –** Standards for soil and rock classification are provided in PDDM Section 6.3.2.3.4, and technical guidance is provided in GTGM Section 3.2.3.4. The International Society of Rock Mechanics (ISRM) classification system shall be followed for rock and rock mass descriptions, as presented in FHWA GEC-5 FHWA-IF-02-034. The primary source supporting the standards and guidance is NHI 132031, and a secondary source is AASHTO MSI-1. Because single-tube core barrels generally provide poor recovery rates, the double- or triple-tube core barrel systems shall be used. To protect the integrity of the core from damage (minimize extraneous core breaks), a hydraulic ram shall be used to expel the core from the core barrel. Rock cores shall be photographed in color as soon as possible after being taken from the bore hole and before laboratory testing.

If rock is encountered in boreholes within the planned depth of drilling, continuous rock coring shall be performed in accordance with the following procedures. Rock coring shall be performed using a double or triple tube HQ coring system or other larger-diameter, double or triple-tube coring system. The HQ system produces cores 2.4 inches in diameter. The advantage of the triple tube system is that a split liner is used to contain the core, which results in relatively minimal disturbance to the core. Where weak rock zones are encountered, soil sampling techniques may be used instead of coring to recover samples that would be relatively undisturbed and suitable for testing. These techniques include the use of samplers such as the Pitcher or MC samplers. The potential difficulty with these samplers is that they can be easily damaged by hard, gravel-size particles that are often mixed with the softer, clay-like matrix of the weathered rock. These difficulties will need to be considered when planning the exploration program.

Rock core samples shall be placed in plastic core bags or double wrapped in plastic wrap and placed in properly labeled wooden core boxes indicating the run number and depth of each run with consistent orientation. The core boxes should be transported to a storage facility at the end of each day. An adequate number of core boxes shall be maintained on site at all times during field exploration activities. The core shall be digitally photographed, (at least 10 megapixels) taking at least 1 photo for each core box, and close-ups taken of special features such as shear zones or other features of special interest. The core box label shall be clearly visible within the photo. An experienced geologist shall study the core and edit the borehole log based on their observations. Cores boxes and photos shall be maintained throughout the design process and construction, with cores that have been removed for testing duly indicated in the appropriate locations in each box.

In some rock slope applications, it is important to understand the precise orientation of rock discontinuities for the design. Standards for using orienting-recovered rock core are presented in NHI 132031. In special cases, boreholes can be photographed/imaged to visually inspect the condition of the sidewalls, distinguish gross changes in lithology, and

RFP No.: 13-57 – Addendum No. 5 - 10/09/2014

identify fracture zones, shear zones, and joint patterns by using specialized television cameras. Refer to AASHTO MSI-1, Section 6.1.2.

- **Care and Retention of Samples –** Technical guidelines for soil and rock retention are provided in GTGM Section 3.2.3.7, and geotechnical boring and sample identification, handling and storage guidelines are provided in each Contract.

10.A.2.7 Soil and Rock Classification

Standards for soil and rock classification are provided in PDDM Section 6.3.2.4, and technical guidance is provided in GTGM Section 3.2.4. Soils shall be classified in accordance with the ASTM Unified Soil Classification System (USCS). Rock and rock mass descriptions and classification shall follow the ISRM classification system presented in FHWA GEC-5. Material descriptions are based on the visual-manual method, and materials classifications are based on laboratory index tests (ASTM D 2487). Additional guidance is contained in Caltrans Soil and Rock Logging, Classification, and Presentation Manual (2007).

10.A.2.8 Exploration Logs

Standards for preparing exploration field logs are provided in PDDM Section 6.3.2.5, and technical guidance is provided in GTGM Section 3.2.5.

- **Field Logs –** Field logging shall be performed by a geologist or engineer under the direct supervision of a California registered geotechnical engineer, professional geologist, or CEG. Logging shall be performed in accordance with ASTM D 5434. The location information (e.g., station, offset, elevation, and/or state plane coordinates) of all the explorations are to be recorded on the field logs. Exploration locations shall be located at the time of drilling by GPS with at least sub-10-foot accuracy. The explorations shall eventually be located by a licensed land surveyor. Required documentation for test pits shall include a scale drawing of the excavation, and photographs of the excavated faces and spoils pile. Drilling and sampling methods and in-situ measurement devices that were used shall also be documented. The field logs shall contain basic reference information at the top, including project name, purpose, specific location and elevation, exploration hole, number, date, drilling equipment, procedures, drilling fluid, person or persons logging the hole, etc. In addition to the logging descriptions of soil and rock encountered during exploration, the depth of each stratum contact, discontinuity, and lens shall be recorded. The reason for terminating an exploration hole and a list/description of instrumentation (if any) or groundwater monitoring well installed shall be written at the end (bottom) of each exploration log.
- **Final Logs –** Exploration logs shall be prepared with the gINT boring/test pit log software platform, using the formatted boring record template standardized by Caltrans (illustrated as Figures 5-12 and 5-13 in the Caltrans logging manual, 2007 version). An explanation key, known as the Boring Record Legend shall always accompany exploration logs whenever they are presented. The standardized legends to be used for CHSTP are illustrated as figures

RFP No.: 13-57 – Addendum No. 5 - 10/09/2014

5-14 through 5-16 of Caltrans (2007). The final edited log shall be based on the initial field log, visual classification, and the results of laboratory testing. The final log shall include factual descriptions of all materials, conditions, drilling remarks, results of field and lab tests, and any instrumentation. Where groundwater observation wells or piezometers are installed, construction details shall be included (casing size, type of casing, depth of screen length of screen, screen opening, depth and type of filter material, sanitary seal and annular backfill material). Observation wells and piezometer should also be developed by bailing, surging or overpumping to enhance communication with the surrounding strata. For observation wells and piezometers, several measurements are usually necessary within a one-week timeframe following drilling to verify that measured groundwater levels or pressures have achieved equilibrium. Where seasonal fluctuations of groundwater levels are of concern, water level measurements shall be collected on a monthly or quarterly schedule, as appropriate to establish the nature and magnitude of variability. As a minimum, final boring logs shall contain the information shown in NHI132031. AASHTO MSI-1 provides additional guidance regarding documentation for boring logs.

10.A.2.9 In Situ Testing

Standards for performing in situ testing are provided in PDDM Section 6.3.2.6, and technical guidance is provided in GTGM Section 3.2.6. The primary reference is NHI1 32031. In-situ testing is very beneficial for projects where obtaining representative samples suitable for laboratory testing is difficult. Field in-situ borehole tests can be correlation tests, strength and deformation tests and permeability tests. Correlation tests primarily consist of SPTs performed in accordance with ASTM D 1596 and AASHTO T206, and Dynamic CPTs are performed in accordance with ASTM D 3441.

- In-situ soil tests may consist of the following:
  - **Cone Penetration Test (CPT) –** Refer to Section 10.A.2.6.
  - **Pressuremeter Test –** This test measures state of stress in-situ and stress/strain properties of soils by inflating a probe placed at a desired depth in a borehole. Tests are completed in accordance with ASTM D 4719. Reference FHWA-IP-89-008.
  - **Field Vane Shear Test (VST) –** This test is used on very soft to medium stiff cohesive soil or organic deposits to measure the undrained shear strength, remolded strength of the soil and soil sensitivity. Field vane shear test may provide more reliable estimate of peak and residual shear strength in cohesive soils, as disturbance from sampling and testing in laboratory is avoided. Tests are completed in accordance with ASTM D 2573 and AASHTO 223. VST is often regarded as a valuable test to estimate peak and residual shear strength in cohesive soils as disturbance from sampling and testing in the laboratory can be avoided.
  - **Flat-Plate Dilatometer Test –** This test uses pressure readings from an inserted plate at the base of a borehole to evaluate and assess stratigraphy and obtain estimates of at-rest lateral stresses, elastic modulus, and shear strength of loose to medium dense sands

RFP No.: 13-57 – Addendum No. 5 - 10/09/2014

(and to a lesser degree, silts and clays). Tests are completed in accordance with ASTM D 6635. Reference FHWA-SA-91-044. Care and judgment shall be undertaken for this test as it often provides information that is difficult to interpret or relate to parameters needed for engineering design.

- Hydrogeologic testing in-situ may consist of the following:
  - **Permeability Tests –** Several in-situ hydraulic conductivity tests exist, with the most commonly used methods being the pumping test and the slug test. The selection of the appropriate aquifer test method for determining hydraulic properties by well techniques is described in ASTM D 4043. In general, refer to NHI1 32031, USBR Geology Manual, and NAVFACDM-7.1.
    - **Pumping Test –** The pumping test requires not only a test well to pump from, but also 1 to 4 adjacent observation wells to monitor the changes in water levels as the pumping test is performed. Pumping tests are typically used in large-scale investigations to more accurately measure the permeability of an area for the design of dewatering systems. Refer to ASTM D 4050.
    - **Slug Test –** The slug test is quicker to perform and much less expensive, because observation wells are not required; however, this test typically only examines a small volume of the permeable material around the instrument when compared to pumping tests. It consists of affecting a rapid change in the water level within a well by quickly injecting or removing a known volume of water or solid object, known as a slug. The water levels are monitored continuously while the natural flow of groundwater out of or into the well occurs until equilibrium in the water level is stabilized. Refer to ASTM D 4044.
  - **Packer Tests –** These tests are performed in a borehole by placing packers above and below the soil/rock zone to be tested. One method is to remove water from the material being tested (Rising Water Level Method). Another method is to add water to the borehole (Falling Water Level Method and Constant Water Level Method). A third method utilizes water under pressure rather than gravity flow. The coefficient of permeability that is calculated provides a gross indication of the overall mass permeability. Refer to FHWA-TS-89-045 and NHI1 32031.
  - **Open Borehole Seepage Tests –** Methods include "Falling Water Level," "Rising Water Level," and "Constant Water Level" and are selected based on the relative permeability of the subsurface soils and groundwater conditions. Further detail is provided in Chapter 6 of NHI1 32031.
  - **Infiltration Tests –** Two types of infiltrometer systems are available: sprinkler type and flooding type. Sprinkler types attempt to simulate rainfall, while the flooding type is applicable for simulating runoff conditions. Applications for these tests include the design of subdrainage and dry well systems. The most common application is the falling

RFP No.: 13-57 – Addendum No. 5 - 10/09/2014

head test, performed by filling (flooding) a test pit hole and monitoring the rate at which the water level drops. Refer to ASTM D 4043.

Handling and disposal (or permitted discharge to storm sewer system) of water generated from hyrdrogeologic field testing shall be the responsibility of the Geotechnical Designer conducting the investigation work.

If the Geotechnical Designer intends to use field tests not covered in the current ASTM or referenced standards, the proposed test methods shall be submitted to the Authority for acceptance prior to start of testing.

10.A.2.10 Laboratory Testing of Soil and Rock

Standards for performing laboratory testing are provided in PDDM Section 6.3.2.7 and technical guidance is provided in GTGM Section 3.2.7. Sufficient laboratory testing shall be performed to represent in-situ conditions. Exhibit 3.2-J of the GTGM provides a guideline for estimating laboratory test requirements for the different types of geotechnical analysis. Chapters 7 through 10 of NHI 132031, GEC-5, and Chapters 2 and 3 of NHI 132012 provide overviews of testing and correlations, as well as criteria to consider when planning the scope of testing programs. Additional references include AASHTO MSI-1, NHI 132012, NHI 132035, USACE EM 1110-2-1906, FHWA-FL-91-002; and Kulhawy and Mayne (1990). Exhibits 3.2-K (soil) and Exhibit 3.2-L (rock) of GTGM present a summary of the predominant laboratory tests. The proposed work plans for laboratory testing programs shall be submitted for review. Testing shall be done at a Caltrans approved facility.

If the Geotechnical Designer proposes to use laboratory tests not covered in the current ASTM or referenced standards, a variance of test methods shall be submitted to the Authority for acceptance prior to commencement.

10.A.2.11 Instrumentation and Monitoring

Standards for installing and monitoring geotechnical instrumentation are provided in PDDM Section 6.3.2.8, and technical guidance is provided in GTGM Section 3.2.8. Instrumentation is used to augment standard investigation practices and visual observations where conditions would otherwise be difficult to evaluate or quantify due to location, magnitude, or rate of change. The quantity and locations of proposed geotechnical instrumentation shall be selected to suit the anticipated conditions consistent with project objectives and design requirements. The geotechnical exploration work plan shall include instrumentation work detailing locations, installation procedures, and methods to be used. The work plan shall be submitted to the Authority for acceptance prior to commencement. Additional information about inclinometers and piezometers are presented in Cornforth (2005).

RFP No.: 13-57 – Addendum No. 5 - 10/09/2014

10.A.3 Project Features Requiring Geotechnical Investigations

10.A.3.1 General

The CHSTP will require geotechnical investigations of the various project features. The referenced standards and technical guidance documents shall be utilized, in addition to the primary and secondary references, where listed. Guidelines for the approximate number and depth of various exploration methods are included. In addition to the general guidelines, the scope of the investigation for the various project features shall also reflect the anticipated subsurface and surface conditions, as well as the design phase level (whether preliminary or final). Some factors that may impact the method, number, depth, and prioritization of subsurface explorations include: the type of soil or rock; presence of landslides or unstable slopes; the presence of rockfalls; rock rippability; fill suitability; presence of expansive or collapsible soils; presence of compressible soils; occurrence of groundwater and hydrogeologic features; potential for ground-borne vibrations; erosion; engineering design needs; temporary shoring; and excavation slopes.

The scope of investigation work for each component shall be developed in accordance with the guidelines contained in this section. The quantity, locations, and depths of proposed geotechnical exploration shall be selected to suit the anticipated conditions consistent with phased project objectives and design requirements. The geotechnical exploration work plan shall include information detailing methods to be used and proposed schedule. The work plan shall be submitted to the Authority for acceptance prior to commencement. If the Geotechnical Designer proposes to use exploration methods or frequencies that differ from the guidelines set forth herein or are not covered in the current reference standards, a variance for the proposed alternate exploration plans shall be submitted to the Authority for acceptance prior to commencement.

The geophysical testing and CPTs provide advantages over conventional test borings under specific situations and should be considered first.

10.A.3.2 Rail Alignment and Earthwork

Standards for investigations for the at-grade rail alignment and earthwork are provided in PDDM Section 6.3.1.2.1, and technical guidance is provided in GTGM Section 3.1.2.1. Explorations are made along the proposed at-grade rail alignment for the purpose of defining the geotechnical properties of materials. This information is used to:

- Design cut and fill slopes
- Assess material suitability for embankment construction
- Define the limits of potential borrow materials
- Assess the suitability of foundation materials
- Evaluate settlement or slope stability problems

RFP No.: 13-57 – Addendum No. 5 - 10/09/2014

- Quantify the depths of topsoil and volumes of material to be removed
- Design remedial measures in areas of poor materials
- Aid the designer of the rail roadbed subgrade section
- Identify geologic hazards such as liquefaction and landslides
- Evaluate train induced vibrations and their impact on the embankment and adjacent structures

For cuts and fills, test borings and/or CPTs shall be advanced at least every 200 feet (for erratic or rapidly changing conditions) to 400 feet (for uniform conditions) along the project alignment where cuts or fills are anticipated. For large cuts or fills (e.g., 30 feet or more in height) an additional boring near the top of the proposed cut and toe of the proposed fill to evaluate cut/fill feasibility and overall stability may be necessary. Depths of the borings shall be at least 3 times the vertical height of the fill (or 40-foot minimum depth) and at least 15 feet below the base of the cut. If soft or poor soils are encountered, additional depth to competent material or 10 feet into rock will be needed to define the subsurface conditions.

10.A.3.3 Structures

Standards for structures and geotechnical hazards are provided in PDDM Section 6.3.1.2.3, and technical guidance is provided in GTGM Section 3.1.2.3 and Exhibit 3.1-B Guideline "Minimum Boring" Criteria. Structures and geotechnical hazards will primarily consist of the following:

- Bridges, aerial structures, and grade separations
- Stations
- Buildings
- Retaining walls
- Tunnels and portals
- Large culverts
- Mast-arm supports (OCS, signals, message signs)
- Landslides
- Faults

For bridges, 1 boring shall be drilled at the substructure unit under 100 feet in width and 2 borings per substructure unit over 100 feet in width, both drilled to a depth of 20 feet below pile/shaft tip elevation or 2 times maximum pile group dimension, whichever is greater or to a depth of a minimum of 10 feet into bedrock. In addition, at least 1 seismic cone, suspension PS logging, or SASW shall be conducted at each bridge to measure shear wave and P-wave velocities in situ, each to a depth of 100 feet or deeper. The number of the seismic cones, suspension loggings, and SASW shall increase if the bridge is of multiple long spans (greater

RFP No.: 13-57 – Addendum No. 5 - 10/09/2014

than 350 feet) and/or if the bridge is located in erratic soil conditions with soft, compressible and loose saturated soils.

For buildings and stations, 1 boring shall generally be made at each corner and 1 in the center. This may be reduced for small buildings. For extremely large buildings and stations or highly variable site conditions, 1 boring shall be taken at each support location. Refer to building foundation manuals and CBC (codes) for additional guidance in planning geotechnical investigations. In addition, areas of influence of the building/station and/or of surrounding geologic or geotechnical issues shall be considered in defining the extent of explorations.

For retaining walls, the minimum site exploration will be 1 boring or 1 CPT (or both) at 100 to 200 foot intervals, each drilled to a depth of 0.75 to 1.5 times wall height or to a competent stratum if potential deep stability or settlement is a problem. The boring and CPT can be interchangeable and located both at the front of and back of the wall face.

Due to the extreme variability of conditions under which tunnels are constructed and the complexity of the projects, it is difficult to provide specific recommendations for tunnel investigation criteria. In general, boring footage is typically on the order of 1.5 to 3.0 linear feet of borehole per route foot of tunnel, and site exploration budgets are typically on the average of 3 percent of the estimated tunnel cost. To characterize the rock in a proposed tunnel zone, rock borings should be advanced to depths such that they extend at least 1.5 to 2 times the tunnel diameter below the tunnel invert elevation. Criteria shall be established for each project reach on an individual basis and be based on the complexity of the geology and the length and depth of the tunnel. FHWA-IF-05-023 and U. S. National Committee on Tunneling (USNCTT, 1995) shall be considered the primary references.

For culverts, a minimum of 1 boring per major culvert drilled to a competent stratum or to a depth of twice the culvert height, whichever is less.

Standard foundations for sign bridges, cantilever signs, cantilever signals, and strain pole standards are based on allowable lateral bearing pressure and angle of internal friction of the foundation soils. The determination of these values may be estimated by SPT and CPT. One CPT or 1 boring shall be made at each designated location. CPT soundings shall be drilled to at least 50 feet into firm ground. Borings shall extend 50 feet into suitable soil or 5 feet into competent rock. Deeper borings may be required for posts with higher torsional loads or if large boulders are anticipated. Other criteria are the same as for bridges.

In addition to the above structures, any structure such as signage or other design features shall be addressed with regard to their potential influence and evaluated, as needed.

10.A.3.4 Landslides and Slope Instability

Standards for investigations for landslides are provided in PDDM Section 6.3.1.2.4, and technical guidance is provided in Section 3.1.2.4 and Exhibit 3.1-B of the GTGM. A minimum of 3 borings shall be advanced along a line perpendicular to centerline or planned slope face to

RFP No.: 13-57 – Addendum No. 5 - 10/09/2014

establish geologic cross sections for stability analysis. The number of cross sections depends on the extent of the slope stability problem. For active slides, place at least 1 boring each above and below the sliding area. The borings shall be extended to an elevation below active or potential failure surfaces and into hard stratum, or to a depth for which failure is unlikely because of geometry of the cross section. If slope inclinometers are used to locate the depth of an active slide, they must extend to a depth below the base of the slide. Observation wells and/or piezometers at selected depths will also be required to evaluate the groundwater table in the soil/rock mass.

10.A.3.5 Faults

At locations where active faulting is suspected to be coincident with or within the area of CHSTP operations and facilities, a geologic reconnaissance will be required to ground-truth mapped fault traces. This reconnaissance shall be carried out by means of interpretations of aerial photos, LiDAR data, satellite imagery, and topographic information. The locations shall be reviewed in the field to assess the presence of geomorphic features associated with faulting such as escarpments, pressure ridges, sag ponds, seeps/springs, vegetation contrasts, or deflected drainages. All such features shall be documented on a geologic field map. If sufficient field data is available to document that the fault or fault zone is outside the footprints of the high-speed train operations, no further fault evaluation is required. Otherwise, a site specific investigation including paleo-seismic trenching will be necessary.

If existing paleo-seismic trenching data is available, it may be reviewed and used as a basis for locating the fault and providing its rupture characteristics for final design; however, if either a known active fault or suspected active fault is located near or at the location of a project facility, exploratory trenching across the fault will be required to assess its rupture characteristics for input to final design. Additional guidance will be provided when characterizing active faults that may produce surface rupture.

10.A.3.6 Construction Material Sources

Standards for investigations for construction material sources are provided in PDDM Section 6.3.1.2.2, and technical guidance is provided in Section 3.1.2.2 and Exhibit 3.1-B of the GTGM. Borings shall be spaced every 100 to 200 feet. The depth of exploration shall extend 5 feet beyond the base of the deposit, or to a depth required to provide the needed quantity of borrow material. These investigations shall evaluate the quality and quantity of materials available at existing and prospective sources within the vicinity of a project. These materials could include gravel base, crushed surfacing materials, pavement and concrete aggregates, riprap, wall backfill, borrow excavation, and select backfill materials. The evaluation may consider existing government-owned material sources, existing commercial material sources, expansion of existing sources, and development of new material sources.

RFP No.: 13-57 – Addendum No. 5 - 10/09/2014

10.A.3.7 Hydrological Features – Infiltration and Detention Facilities

For surface hydrological features (infiltration or detention facilities) that may be needed, at least 1 boring per site shall be obtained to assess feasibility and define groundwater conditions. Boring depths will depend on the nature of the subsurface conditions encountered and the depth of influence of the geotechnical feature. Borings shall extend at least 20 feet below the likely base elevation of the facility, or five times the maximum anticipated ponded water depth, whichever is greater. Observation wells and/or piezometers shall be installed and monitored for at least 1 year to assess yearly highs and lows for the groundwater.

10.A.3.8 Pavement

Pavements are not a significant component of the HST trackway alignment design but will be an extensive design element for station areas, access roads, grade separations, and surface road reconstruction. Standards for investigations for pavement subgrade are provided in PDDM Chapter 6, Section 6.3.1.2.5 and Chapter 11, and technical guidance is provided in GTGM Section 3.1.2.5. Other sources supporting investigation standards and guidance are NHI 132031, AASHTO MSI-1, and FHWA GEC-5. For design of pavement, refer to *Civil* chapter for details.

10.A.4 References

1. American Association of State Highway and Transportation Officials (AASHTO)
   - Manual on Subsurface Investigations, MSI-1, 1988.
   - Standard Recommended Practice for Decommissioning Geotechnical Exploratory Boreholes, AASHTO R 22-97, standard Specifications, 2005.
   - Specification for Transportation Materials and Methods of Sampling and Testing, Part II: Tests, HM-28-M, 2008.
2. American Society of Civil Engineers (ASCE) reference titled "Geotechnical Baseline Reports for Construction – Suggested Guidelines", ASCE 2007.
3. American Railway Engineering and Maintenance of Way Association (AREMA) – Manual for Railway Engineering, 2008 Edition.
4. ASTM, Annual Book of ASTM Standards, 2008 Edition.
5. Caltrans, Soil and Rock Logging, Classification, and Presentation Manual, June 2010.
6. Cornforth, D.H., Landslides in Practice: Investigations, Analysis, and Remedial/Preventive Options in Soils, Chapter 4, John Wiley & Sons 2005.
7. Federal Highway Administration (FHWA):
   - Geotechnical Technical Guidance Manual, May 2007.
   - Project Development and Design Manual (Draft) – Chapter 6 - Geotechnical, April 2011.

RFP No.: 13-57 – Addendum No. 5 - 10/09/2014

– Checklist and Guidelines for Review of Geotechnical Reports and Preliminary Plans and Specifications, FHWA-ED-88-053, 1988, revised February 2003.

– Road Tunnel Design Guidelines, FHWA-IF-05-023, 2004.

– Geophysical Methods - Technical Manual (Application of Geophysical Methods to Highway Related Problems, cooperatively with Blackhawk Geosciences), DTFH68-02-P-00083, 2003.

– Soils and Foundations Workshop, NHI Course No. 132012, Volumes I and II FHWA-NHI-06-088, and FHWA-NHI-06-089, 2006.

– Subsurface Investigations – Geotechnical Site Characterization, NHI Course Manual No. 132031, FHWA-NHI-01-031, 2002.

– Evaluation of Soil and Rock Properties, Geotechnical Engineering Circular No. 5, FHWA-IF-02-034, 2002.

8. Federal Railroad Administration (FRA), High-Speed Ground Transportation Noise and Vibration Impact Assessment, FRA Report No. 293630-1, December 1998.

9. ISRM, Suggested Methods for the Quantitative Description of Discontinuities in Rock Masses, 1981.

10. Kulhawy, F.H. and Mayne, P.W., Manual on Estimating Soil Properties for Foundation Design, EPRI Report EL-6800, 1990.

11. U. S. Army Corps of Engineers (USACE), Geotechnical Investigations, Engineering Manual, EM 1110-1-1804, Department of the Army, 2001.

12. U. S. Army Corps of Engineers (USACE), Soil Sampling, Engineering Manual, EM 1110-1-1906, Department of the Army, 1996.

RFP No.: 13-57 – Addendum No. 5 - 10/09/2014

Appendix 10.B: Guidelines for Geotechnical Earthquake Engineering

10.B.1 Purpose

These guidelines represent a preferred, but not necessarily the only required actions needed for a particular design feature associated with earthquake engineering. These guidelines convey a minimum standard of care in performing earthquake engineering design. These are not intended as a prescribed design criteria or checklist.

10.B.2 Seismic Design Criteria

Seismic design criteria for geotechnical earthquake engineering have been established in terms of 2 levels of project performance criteria: No Collapse Performance Level (NCL) and Operability Performance Level (OPL) as noted in the *Seismic* chapter of the Design Criteria.

Geotechnical seismic design shall be consistent with the philosophy for structural design for the 2 performance levels. The performance objective shall be achieved at a seismic risk level that is consistent with the seismic risk level required for that seismic event. Slope instability and other seismic hazards such as liquefaction, lateral spread, post-liquefaction pile down drag, and seismic movement/settlement may require mitigation to ensure that acceptable performance is obtained during a design seismic event. The Geotechnical Designer shall evaluate the potential for differential movement/settlement between mitigated and non-mitigated soils. Additional measures may be required to limit differential movement/settlements to tolerable levels both for static and seismic conditions. The foundations shall be designed to address liquefaction, lateral spread, and other seismic effects to prevent collapse. All earth-retaining structures shall be evaluated and designed for seismic stability internally and externally. Cut slopes in soil and rock, fill slopes, and embankments, especially those that could have significant impact on high-speed train operation, shall be evaluated for instability due to design seismic events and associated geologic hazards.

10.B.2.1 Liquefaction Triggering and Consequences

Evaluation of soil liquefaction triggering potential shall be performed in 2 steps. The first step involves evaluating whether the soil meets the compositional criteria necessary for liquefaction. These compositional criteria are presented in Section 10.12.2.

For soils meeting the compositional criteria, the next step is to evaluate whether the design level ground shaking is sufficient to trigger liquefaction given the soil's in-situ penetration resistance. If it is assessed that liquefaction will be triggered, the engineering consequences of liquefaction shall be evaluated. In addition to triggering for liquefaction, the Geotechnical Designer shall consider the allowable deformation and the long-term, post-construction performance requirements for earth and fill conditions.

RFP No.: 13-57 – Addendum No. 5 - 10/09/2014

For fine-grained soils (especially soils that are potentially sensitive) that do not meet the compositional criteria for liquefaction, the impact of cyclic softening resulting from seismic shaking shall be evaluated. Considering the range of criteria currently available in the literature, the Geotechnical Designer shall consider performing cyclic triaxial or simple shear laboratory tests on undisturbed soil samples to assess cyclic response for critical cases.

For gravels, field investigation methods appropriate for soil layers containing gravels include the Becker Hammer Penetration Test (BPT), Large Sampler Penetration Test (LPT), and small interval SPT. Seed et al. (2003) discusses different methods for performing liquefaction analysis in coarse and gravelly soils.

10.B.2.2 Liquefaction Triggering Evaluations

Liquefaction-triggering evaluations shall be performed for sites that meet the 2 design criteria established in the *Geotechnical* chapter:

CPT and/or CPT_u (with pore water pressure measurement) shall be used as the primary method of field investigation for liquefaction analysis where it can be advanced without premature refusal. Where CPT data are unavailable, SPT values can be used as the liquefaction evaluation method where borings are performed. LPT, shear wave velocity (Vs), or BPT shall be used in soils difficult to test using SPT and CPT methods, such as gravelly soils. In addition, small interval SPT (blow counts measured for every 1 inch) shall be used in gravelly soils. More rigorous, nonlinear, dynamic, effective stress computer models may be used for site conditions or situations that are not modeled well by the simplified methods.

10.B.2.2.1 Simplified Procedures

All 3 simplified methods by Youd et al. (2001), Seed et al. (2003), and Idriss and Boulanger (2008) shall be used for liquefaction-triggering analysis for each boring and/or CPT. Results in terms of FOS shall be reported. Results of these analyses shall be interpreted according to the following. If the FOS values between the 3 methods are within 20 percent of each other, an average FOS shall be reported for that particular boring and/or CPT. If the FOS values from these 3 methods vary by more than 20 percent and use of the more conservative results for design would have significant cost consequences, some additional evaluations may be warranted. The additional evaluations shall include an assessment of which method best applies to this specific case, additional soil-specific field and laboratory testing, and/or review by an expert panel.

The potential consequences of liquefaction and (if necessary) liquefaction hazard mitigation measures shall be evaluated if the FOS against liquefaction is less than 1.1.

10.B.2.2.2 Liquefaction-Induced Movement/Settlement

Both dry and saturated deposits of loose granular soils tend to densify and settle during and/or following earthquake shaking. Methods to estimate movement/settlement of unsaturated

RFP No.: 13-57 – Addendum No. 5 - 10/09/2014

granular deposits are presented in Section 10.B.2.8. Liquefaction-induced total ground settlement of saturated granular deposits shall be estimated using Zhang et al. (2002) and at least 1 of the following methods: Ishihara and Yoshimine (1992), Idriss and Boulanger (2008), and Cetin et al. (2009). If a laboratory-based analysis of liquefaction-induced settlement is needed for fine-grained soils, laboratory cyclic triaxial shear or cyclic simple shear testing may be used to evaluate the liquefaction-induced vertical settlement in lieu of empirical SPT- or CPT-based criteria. Even when laboratory-based volumetric strain test results are obtained and used for design, the empirical methods shall be used to qualitatively check the reasonableness of the laboratory test results.

It should be noted that all of these estimates are free-field settlements, and structural movement/settlements resulting from soil liquefaction are more important in most of the cases (Bray and Dashti, 2010). Structural movement/settlements may also result from shear-induced movements. Hence, methods that are used for estimating shear-induced ground movements may be required.

10.B.2.2.3 Liquefied Residual Strength Parameters

Unless soil-specific laboratory performance tests are conducted as described later in this section, residual strengths of liquefied soil shall be evaluated using at least 2 of these procedures: Seed and Harder (1990), Idriss and Boulanger (2008), Olson and Stark (2002), and Kramer and Wang (2011). Design liquefied residual shear strengths shall be based on weighted average of the results; Ledezma and Bray (2010) may be used as a reference to select a reasonable weighting scheme.

Results of laboratory cyclic triaxial shear or cyclic simple shear testing may be used to evaluate the residual strength for fine-grained soils that can be sampled with minimal disturbance in lieu of empirical SPT- or CPT-based criteria. Even when laboratory based test results are obtained and used for design, 2 of the above empirical methods shall be used to qualitatively check the reasonableness of the laboratory test results. It shall be noted that SPT N fines content corrections for residual strength calculations are different than corrections for liquefaction triggering and settlement.

10.B.2.2.4 Surface Manifestations

The assessment of whether surface manifestation of liquefaction (such as sand boils, ground fissures, etc.) will occur during earthquake shaking at a level-ground site that is not within a few hundred feet of a free face shall be made using the method outlined by Ishihara (1985) and shall be compared against results by the method presented in Youd and Garris (1995). It is emphasized that settlement may occur, even with the absence of surface manifestation. The Ishihara (1985) method is based on the thickness of the potentially liquefiable layer (H2) and the thickness of the non-liquefiable crust (H1) at a given site. In the case of a site with stratified soils containing both potentially liquefiable and non-liquefiable soils, the thickness of a potentially liquefiable layer (H2) shall be estimated using the method proposed by Ishihara (1985) and

RFP No.: 13-57 – Addendum No. 5 - 10/09/2014

Martin et al. (1991). If the site contains potential for surface manifestation, then use of mitigation methods shall be evaluated.

10.B.2.3 Evaluation of Lateral Spreading and Consequences

Lateral spreading shall be evaluated for a site if liquefaction is expected to trigger within 50 feet of the ground surface, and either a ground surface slope gradient of 0.1 percent or more exists, or a free face conditions (such as an adjacent river bank) exists. Use Shamoto et al. (1998) as a method to assess the maximum distance from the free face where lateral spreading displacements could occur. Historic and paleoseismic evidence of lateral spreading is valuable information that shall also be reviewed and addressed. Such evidence may include sand boils, soil shear zones, and topographic geometry indicating a spread has occurred in the past.

10.B.2.3.1 Methodologies for Predicting Lateral Spreading

If there is a free face condition, the post-liquefaction flow failure FOS of an earth slope or sloping ground shall be estimated per Section 10.B.2.9.1 before estimating liquefaction-induced lateral movements. If the post-liquefaction stability FOS is less than 1.0 then empirical or analytical methods cannot generally be used to reliably predict the amount of ground movement.

In order to predict the permanent deformations resulting from the occurrence of lateral spreading during earthquake loading, several methods of analyses are available. These methods of analyses can be categorized into 2 general types: Empirical Methods and Analytical Methods.

Empirical Methods – The most common empirical methods to estimate lateral displacements are Youd et al. (2002), Bardet et al. (1999), Zhang et al. (2004), Faris et al. (2006) and Idriss and Boulanger (2008). Analysts shall be aware of the applicability and limitations of each method. Lateral displacements shall be evaluated using the Zhang et al. (2004) method and at least 1 of the other methods described above.

Empirical methods shall be used as the primary means to estimate deformations due to lateral spreading. Multiple models shall be considered, and the range of results shall be reported.

Analytical Methods – For cases where slope geometry, structural reinforcement, or other site-specific features are not compatible with the assumptions of the empirical methods, the Newmark sliding block analyses shall be used. Newmark analyses shall be conducted similar to that described in the seismic slope stability section, except that estimation of the yield acceleration (k_y) shall consider strength degradation due to liquefaction. In addition, numerical methods using finite elements and/or finite difference approach may be used.

The Geotechnical Designer shall compare the estimated lateral spread values with the allowable deformation values and develop mitigation plans described in Section 10.B.2.4, if necessary. The Geotechnical Designer shall consider the long-term, post-construction performance requirements for earth-and-fill conditions.

RFP No.: 13-57 – Addendum No. 5 - 10/09/2014

10.B.2.4 Analysis for Design of Liquefaction Mitigation

During the liquefaction evaluation, the engineer shall evaluate the extent of liquefaction and potential consequences such as bearing failure, slope stability, and/or vertical and/or horizontal deformations. Similarly, the engineer shall evaluate the liquefaction hazard in terms of depth and lateral extent affecting the structure in question. The lateral extent affecting the structure will depend on whether there is potential for large lateral spreads toward or away from the structure and the influence of liquefied ground surrounding mitigated soils within the perimeter of the structure.

Large lateral spread or flow failure hazards may be mitigated by the implementation of containment structures, removal or treatment of liquefiable soils, modification of site geometry, structural resistance, or drainage to lower the groundwater table.

Where liquefiable clean sands are present, geotechnical evaluations for design shall consider an area of softening due to seepage flow occurring laterally beyond the limit of improved ground a distance of two-thirds of the liquefiable layer thickness, as described in studies by Iai et al. (1988). To calculate the liquefiable thickness, similar criteria shall be used as that employed to evaluate the issue of surface manifestation by the Ishihara (1985) method. For level ground conditions where lateral spread is not a concern or the site is not a water front, this buffer zone shall not be less than 15 feet and it is likely not to exceed 35 feet when the depth of liquefaction is considered as 50 feet, and the entire soil profile consists of liquefiable sand.

The performance criteria for liquefaction mitigation, established during the initial investigation, shall be in the form of a minimum and average penetration-resistance value associated with a soil type (fines content, clay fraction, USCS classification, CPT soil behavior type index I_c, normalized CPT friction ratio), or a tolerable liquefaction settlement as calculated by procedures discussed earlier. The choice of mitigation methods will depend on the extent of liquefaction and the related consequences. In general, options for mitigations are divided into 2 categories: ground improvement options and structural options.

10.B.2.5 Ground Improvement Options

Refer to Section 10.9.5.5.

10.B.2.6 Structural Options

Structural mitigation involves designing the structure to withstand the forces and displacements that result from liquefaction. In some cases, structural mitigation for liquefaction effects may be more economical than soil improvement mitigation methods. However, structural mitigation may have little or no effect on the soil itself and may not reduce the potential for liquefaction. With structural mitigation, liquefaction and related ground deformations will still occur. The structural mitigation shall be designed to produce acceptable structural performance (consistent with the requirements for the 2 design earthquakes) in terms of liquefaction/lateral spread-induced displacements and structural damage. The appropriate

RFP No.: 13-57 – Addendum No. 5 - 10/09/2014

means of structural mitigation may depend on the magnitude and type of liquefaction-induced soil deformation or load.

Depending on the type of structure and amount and extent of liquefaction, common structural options to be considered are as follows:

- Piles or caissons extending to non-liquefiable soil or bedrock below the potentially liquefiable soils
- Post-tensioned slab foundation (appropriate only for small, lightly loaded structures)
- Continuous spread footings having isolated footings interconnected with grade beams
- Mat foundation (appropriate only for small, lightly loaded structures)

Details, applicability, and limitations of these techniques can be found in Martin and Lew (1999). Additional requirements for design of piles in liquefied soil are presented in Section 10.B.2.7.

10.B.2.7 Seismic Considerations for Lateral Design of Piles in Liquefiable Soils

Seismic considerations for lateral design of pile/shaft design in soils include the effects of liquefaction on the lateral response of piles/shafts and designing for the additional loads due to lateral spread and/or slope failures. Effects of liquefiable soils shall be included in the lateral analysis of piles/shafts by using appropriate p-y curves to represent liquefiable soils. Liquefied soil p-y curves shall be estimated using the static API sand model reduced by a p-multiplier using the method of Brandenberg, et al. (2007) and Boulanger, et al. (2007).

The displacement-based approach for evaluating the impact of liquefaction-induced lateral spreading loads on deep foundation systems that shall follow Caltrans' "Guidelines on Foundation Loading and Deformation Due to Liquefaction Induced Lateral Spreading," dated February 2011. However, the liquefaction susceptibility and triggering analyses performed as part of this procedure shall be based on Section 10.B.2.1and Section 10.B.2.2, respectively. Similarly, the lateral spread estimates shall be based on Section 10.B.2.3. The Geotechnical Designer shall compare the estimated lateral spread values with the allowable deformation values and develop mitigation plans described in Section 10.B.2.4, if necessary. The Geotechnical Designer shall also consider the long-term, post-construction performance requirements for earth-and-fill conditions.

Numerical methods incorporating finite element and/or finite difference techniques may be used to assess pile response in laterally spreading soils.

10.B.2.8 Seismic Settlement of Unsaturated Soils

Seismically induced settlement of unsaturated granular soils (dry sands) shall be estimated using procedures provided by Tokimatsu and Seed (1987). Estimated values in terms of total and differential settlements shall be reported.

RFP No.: 13-57 – Addendum No. 5 - 10/09/2014

The Geotechnical Designer shall compare the estimated settlement values with the allowable deformation values and develop mitigation plans described in Section 10.B.2.4, if necessary. The Geotechnical Designer shall also consider the long-term, post-construction performance requirements for earth-and-fill conditions.

10.B.2.9 Seismic Slope Stability and Deformation Analyses

Instability of slopes during seismic loading could be due to liquefaction or due to inertial loading, or a combination of both. In this section, instability of both the natural existing slopes and embankment slopes is addressed.

The Geotechnical Designer shall compare the estimated deformation values with the allowable deformation values and develop mitigation plans described in Section 10.B.2.4, if necessary. The Geotechnical Designer shall also consider the long-term, post-construction performance requirements for earth-and-fill conditions.

10.B.2.9.1 Liquefaction-Induced Flow Failure

Liquefaction leading to catastrophic flow failures driven by static shearing stresses that result in large deformation or flow shall also be addressed by the Geotechnical Designer. These flow failures may occur near the end of strong shaking or shortly after shaking and shall be evaluated using conventional limit equilibrium static slope stability analyses. The analysis shall use residual undrained shear strength parameters for the liquefied soil assuming seismic coefficient to be zero (i.e., performed with K_h and K_v equal to zero). The residual strength parameters estimated using the method presented in Section 10.B.2.2.3shall be used. In addition, strength reduction due to cyclic degradation versus strength increase due to the effects of rate of loading shall be considered for normally consolidated clayey layers and non-liquefiable sandy layers. Chen et al. (2006) have discussed the effects of different factors on the dynamic strength of soils. The analysis shall look for both circular and wedge failure surfaces. If the limit equilibrium FOS is less than 1.1, flow failure shall be considered likely. Liquefaction flow failure deformation is usually too large to be acceptable for design of structures, and some form of mitigation will likely be needed. However, structural mitigation may be acceptable if the liquefied material and any overlying crust flow past the structure and the structure and its foundation system can resist the imposed loads.

If the FOS for this decoupled analysis is greater than 1.1 for liquefied conditions, k_y shall be estimated using pseudo-static slope stability analysis. The same strength parameters as used during the flow failure analysis shall be used. A new critical failure plane shall be searched assuming both circular and non-circular failure surfaces. Yield acceleration is defined as the minimum horizontal acceleration in a pseudo-static analysis for which FOS is 1.0. Using the estimated k_y values, deformations shall be estimated using simplified methods such as Makdisi and Seed (1978) and Bray and Travasarou (2007). Other methods such as Newmark time history method or more advanced methods involving numerical analysis may be used, but shall be checked against the simplified methods.

RFP No.: 13-57 – Addendum No. 5 - 10/09/2014

For pseudo-static analyses to estimate k_y values, residual strengths for the liquefied layers and reduced strengths for normally consolidated clayey and saturated sandy layers with excess pore water pressure generation (as described earlier) shall be used. This is generally a conservative approach but is appropriate for initial engineering design. For final design more advanced methods involving numerical analyses may be used to better characterize the initiation of liquefaction and pore pressure generation and subsequent reduction in strength.

10.B.2.9.2 Slope Instability Due to Inertial Effects

Pseudo-static slope stability analyses shall be used to evaluate the seismic stability of slopes and embankments due to inertial effects. The pseudo-static analysis consists of conventional limit equilibrium slope stability analysis with horizontal seismic coefficient (K_h) that acts upon the critical failure mass. A horizontal seismic coefficient (K_h) estimated using Bray and Travasarou (2009) and a vertical seismic coefficient, K_v, equal to zero shall be used for the evaluation of seismic slope stability. The Bray and Travasarou (2009) method requires an estimate of allowable deformation to compute K_h. Therefore, the allowable deformation set forth in the *Geotechnical* chapter shall be used. For MCE case, the allowable deformation of 4 inches may be assumed. For these conditions, the minimum required FOS is 1.0. Alternately, pseudo-static analyses may be performed to estimate K_y values. A new failure plane shall be searched for the pseudo-static analysis. The analysis shall look for both circular and non-circular failure surfaces.

10.B.2.10 Seismic Slope Deformations

Deformation analyses shall be performed where an estimate of the magnitude of seismically induced slope deformation is required, and the pseudo-static slope stability FOS is less than 1.0. Acceptable methods of estimating the magnitude of seismically induced slope deformation include Newmark sliding block (time history) analysis, simplified displacement charts and equations based on Newmark-type analyses Makdisi and Seed (1978), Bray and Travasarou (2007), and Rathje and Saygili (2008), or dynamic stress-deformation models. These methods shall not be employed to estimate displacements if the post-earthquake static slope stability FOS using residual strengths is less than 1.0, since the slope will be unstable against static gravity loading and large displacements would be expected.

10.B.2.11 Downdrag Loading (Drag Load) on Structures Due to Seismic Settlement

Downdrag loads on foundations shall be evaluated in accordance with AASHTO LRFD BDS with California Amendments Article 3.11.8, and as specified herein. AASHTO LRFD BDS with California Amendments Article 3.11.8 recommends the use of the non-liquefied skin friction in the non-liquefied layers above and between the liquefied zone(s), and a skin friction value as low as the residual strength within the soil layers that do liquefy, to calculate down drag loads for the extreme event limit state.

RFP No.: 13-57 – Addendum No. 5 - 10/09/2014

10.B.3 References

13. American Association of State Highway and Transportation Officials (AASHTO) LFRD Bridge Design Specifications with California (Caltrans) Amendments
    - Section 3 "Loads and Load Factors"
    - Section 10 "Foundations"
    - Section 11 "Abutments Piers and Walls"
14. American Association of State Highway and Transportation Officials (AASHTO), Manual on Subsurface Investigations, MSI-1, 1988.
15. American Association of State Highway and Transportation Officials (AASHTO) LFRD Bridge Design Specifications, 4th Edition, 2007.
16. American Concrete Institute, Building Code Requirements for Reinforced Concrete, ACI 318.
17. American Institute of Steel Construction, Steel Construction Manual, Thirteenth Edition.
18. ASTM International.
19. American Railway Engineering and Maintenance of Way Association (AREMA) Manual for Railway Engineering.
20. American Society of Civil Engineers, (ASCE) (2006) ASCE/SEI 7-05, "Minimum Design Load for Buildings and Other Structures Chapter 21." ASCE, Reston, VA.
21. Bardet, J.-P., O'Rourke, T.D., and Hamada, M. (1999). "Large-scale modeling of liquefaction-induced ground deformation, Parts I: A four-parameter MLR model." Proceedings of the 7th U.S.-Japan Workshop on Earthquake Resistance Design of Lifeline Facilities and Countermeasures Against Soil Liquefaction, Technical Report MCEER-99-0019, Multidisciplinary Center for Earthquake Engineering Research, pp. 155-174.
22. Barton, N.R., Lien, R. and Lunde, J. (1974). "Engineering Classification of Rock Masses for the Design of Tunnel Support." International Journal of Rock Mechanics and Mining Sciences, 6(4), 189-239.
23. Blake, T.F. et al. (2002). "Recommended Procedures for Implementation of DMG Special Publication 117 Guidelines for Analyzing and Mitigating Landslide Hazards in California." ASCE Los Angeles and SCEC (downloadable at: http://www.scec.org/resources/catalog/hazardmitigation.html#land)
24. Boulanger, R.W. and Idriss, I.M. (2011). "Cyclic Failure and Liquefaction: Current Issues." Proceedings, 5th International Conference on Earthquake Geotechnical Engineering, Santiago, Chile, January 10-13.
25. Boulanger, R.E., Change, D., Brandenberg, S.J., Armstrong, R.J., Kutter, B.L. (2007). "Seismic Design of Pile Foundations for Liquefaction Effects", Chapter 12 in Earthquake Geotechnical Engineering, Springer, The Netherlands.

RFP No.: 13-57 – Addendum No. 5 - 10/09/2014

26. Brandenberg, S. J., Boulanger, R. W., Kutter, B. L., and Chang, D., (2007). "Static Pushover Analyses of Pile Groups in Liquefied and Laterally Spreading Ground in Centrifuge Tests." ASCE Journal of Geotechnical and Geoenvironmental Engineering, Vol. 133, No. 9, pp. 1055-1066.

27. Bray, J. D., Travasarou, T., and Zupan, J. (2010). "Seismic Displacement Design of Earth Retaining Structures." Proceedings, Earth Retention Conference 3, Bellevue, Washington, August 1-4.

28. Bray, J. D. and Dashti, S. (2010). "Liquefaction-Induced Movements of Buildings With Shallow Foundations." Proceedings, Fifth International Conference on Recent Advances on Geotechnical Earthquake Engineering and Soil Dynamics and Symposium in Honor of Professor I.M. Idriss, San Diego, CA, May 24-29.

29. Bray, J.D. and Travasarou, T. (2009). "Pseudostatic Coefficient for Use in Simplified Seismic Slope Stability Evaluation," ASCE Journal of Geotechnical and Geoenvironmental Engineering, Vol. 135, No. 9, p. 1336-1340.

30. Bray, J. D., and Travasarou, T. (2007). "Simplified Procedure for Estimating Earthquake-Induced Deviatoric Slope Displacements." ASCE Journal of Geotechnical and Geoenvironmental Engineering, Vol. 133, No. 4, pp. 381-392.

31. Bray, J.D. and Sancio, R. B. (2006). "Assessment of Liquefaction Susceptibility of Fine-Grained Soils," ASCE Journal of Geotechnical and Geoenvironmental Engineering, Vol. 132, No. 9, pp. 1165-1177.

32. Bridge Welding Code ANSI/AASHTO/AWSD1.5-95

33. The California Building Code.

34. California Department of Transportation (Caltrans) Bridge Design Manuals, latest edition
    - Bridge Design Specification (BDS) - AASHTO LRFD Bridge Design Specification, 2005, with Caltrans Interim Revisions
    - Bridge Memo to Designers Manual (MTD)
    - Bridge Design Practices Manual (BPD)
    - Bridge Design Aids Manual (BDA)
    - Bridge Design Details Manual (BDD)
    - Standard Specifications
    - Standard Plans
    - Seismic Design Memorandum
    - Seismic Design Criteria (CSDC) ver. 1.4

35. California Department of Transportation (Caltrans), "California Amendments to the AASHTO LRFD Bridge Design Specifications (Fourth Edition)", September 2010.

RFP No.: 13-57 – Addendum No. 5 - 10/09/2014

36. California Department of Transportation (Caltrans), "Guidelines on Foundation Loading and Deformation Due to Liquefaction Induced Lateral Spreading," February 2011.

37. California Geological Survey (2003), Fault Rupture Hazard Zones, Special Publication 42, 47 pages, http://www.conservation.ca.gov/CGS/rghm/ap/Pages/Index.aspx

38. California Geological Survey (1996), Guidelines for evaluating the hazard of surface fault rupture, CGS Note 49, 4 pages, http://www.conservation.ca.gov/cgs/information/publications/cgs_notes/note_49/Documents/note_49.pdf

39. California High-Speed Train Project Program EIR/EIS, Task 1.11.a – Tunneling Issues Report, by Parsons Brinckerhoff, Inc., January, 2004.

40. Cetin, K.O., Bilge, H.T., Wu, J., Kammerer, A.M., Seed, R.B. (2009a). "Probabilistic Models for Cyclic Straining of Saturated Clean Sands." ASCE Journal of Geotechnical and Geoenvironmental Engineering, Vol. 135, No. 3, p. 371-386.

41. Cetin, K.O., Bilge, H.T., Wu, J., Kammerer, A.M., Seed, R.B. (2009b). "Probabilistic Model for the Assessment of Cyclically Reconsolidation (Volumetric) Settlements." ASCE Journal of Geotechnical and Geoenvironmental Engineering, Vol. 135, No. 3, p. 387-398.

42. Chen, W., Bray, J.D., and Seed, R.B (2006). "1-G Small Scale Shaking Table Experiments – Seismic Slope Responses and Deformations." Proceedings, 8th US National Conference on Earthquake Engineering, April 18-22, San Francisco, California, Paper No. 1322.

43. Coppersmith and Youngs (1992), Modeling Fault Rupture Hazard for the Proposed Repository at Yucca Mountain, Nevada

44. Dawson, E.M., W.H. Roth, A. Drescher (1999). "Slope stability analysis by strength reduction," Geotechnique, 49(6), 835-840.

45. Empelmann, Whittaker, Los and Dorgarten, "Taiwan High Speed Rail Project – Seismic Design of Bridges Across the Tuntzuchiao Active Fault", 13th World Conference on Earthquake Engineering, Paper No. 140, Vancouver, B.C., Canada, 2004

46. European Standard EN 1991-2:2003 Traffic Loads on Bridges

47. European Standard EN 1990 annex A2: Application to Bridges

48. Faris, A.T., Seed, R.B., Kayen, R.E. and Wu, J. (2006). "A semi-empirical model for the estimation of maximum horizontal displacement due to liquefaction-induced lateral spreading," Proceedings, 8th U.S. International Conference on Earthquake Engineering; Paper No. 1323, San Francisco, CA; April 18-26; 10 p.

49. FIB (Federation Internationale du Beton) Task Group 7.4, Seismic Design and Assessment Procedures for Bridges, Chapter 8: Design for Active Fault Crossings, primary author Ian Billings.

RFP No.: 13-57 – Addendum No. 5 - 10/09/2014

50. Federal Highway Administration (FHWA) Publications:
    - FHWA and Oregon Department of Transportation (2001). "Rockfall Catchment Area Design Guide." Final Report SPR-3 (032).
    - FHWA-CFL/TD-06-002, "InSAR Applications For Highway Transportation Projects." April 2006.
    - FHWA-ED-88-053, "Checklist and Guidelines for Review of Geotechnical Reports and Preliminary Plans and Specifications." 1988, Revised Feb. 2003.
    - FHWA-IF-02-034, "Geotechnical Engineering Circular No. 5 (GEC5), Evaluation of Soil and Rock Properties." April 2002.
    - FHWA-NHI-05-123 "Soil Slope and Embankment Design Reference Manual." Sept. 2005.
    - FHWA-NHI-00-044, "Corrosion/Degradation of Soil Reinforcements for Mechanically Stabilized Earth Walls and Reinforced Soil Slopes." Sept. 2009.
    - FHWA-NHI-05-052, "Development of Geotechnical Resistance Factors and Downdrag Load Factors for LRFD Foundation Strength Limit State Design Reference Manual." Feb. 2005.
    - FHWA-NHI-06-019/020, "Ground Improvement Methods Reference Manual, Volumes I and II." August 2006.
    - FHWA-NHI-06-088/089, "Soils and Foundations Reference Manual, Volumes I and II." December 2006.
    - FHWA-NHI-07-071, "Earth Retaining Structures Reference Manual." June 2008.
    - FHWA-HI-99-007, "Rock Slopes Reference Manual." 1999.
51. Idriss, I.M. and Boulanger, R.W. (2008). "Soil Liquefaction During Earthquakes." Earthquake Engineering Research Institute, MNO-12.
52. Ghasemi, H., "Bolu Viaduct: Damage Assessment and Retrofit Strategy", The 36th Joint Meeting US-Japan Panel on Wind and Seismic Effects (UJNR), Session 1, National Institute of Standards and Technology, Gaithersburg, Maryland, USA, 2004
53. Ishihara, K. (1985). "Stability of Natural Deposits During Earthquakes." Proc. 11th International Conference on Soil Mechanics and Foundation Engineering, San Francisco, Vol. 2. pp. 321-376.
54. Ishihara, K. and Yoshimine, M. (1992). "Evaluation of Settlements in Sand Deposits Following Liquefaction During Earthquakes." Soils and Foundations, JSSMFE, Vol. 32, No. 1.
55. Kenny, J. T. (1954). "Steady-State Vibrations of Beam on Elastic Foundation for Moving Load." Journal of Applied Mechanics, December.
56. Kramer, S. L., and Wang, C. H. (2011). "A hybrid model for estimation of the residual strength of liquefied soil." Submitted for review.

RFP No.: 13-57 – Addendum No. 5 - 10/09/2014

57. Iai, S. Noda, S. and Tsuchida, H. (1988). "Basic considerations for designing the area of the ground compaction as a remedial measure against liquefaction," Proc. U.S.-Japan Joint Workshop of Remedial Measures for Liquefiable Soils, UJNR, Jackson, Wyoming, May 11-13.

58. Ledezma, C. and Bray, J.D. (2010). "Probabilistic Performance-Based Procedure to Evaluate Pile Foundations at Sites with Liquefaction-Induced Lateral Displacement," ASCE Journal of Geotechnical and Geoenvironmental Engineering, Vol. 136, No. 3, p. 464-476.

59. Li D., and Selig, E. T. (1998). "Method for Railtrack Foundation Design I: Development," Journal of Geotechnical/Geoenvironmental Engineering, Vol. 124, No. 4, pg 316-322.

60. Mahin, Sakai, and Jeong, "Use of Partially Prestressed Reinforced Concrete Columns to Reduce Post-Earthquake Residual Displacements of Bridges", Paper No. B25, 5th National Seismic Conference on Bridges & Highways, San Francisco, CA, Sept 18-20, 2005.

61. Makdisi, F.I. and Seed, H.B. (1978). "Simplified Procedure for Estimating Dam and Embankment Earthquake-Induced Deformations." ASCE Journal of the Geotechnical Engineering Division, Vol. 104, No. GT7, July, 1978, pp. 849-867.

62. Martin, G.R., Tsai, C-F, Arulmoli, K. (1991). "A Practical Assessment of Liquefaction Effects and Remediation Needs." Proceedings 2nd International Conference on Recent Advances in Geotechnical Earthquake Engineering and Soil Dynamics, St. Louis, Missouri, March 11-15.

63. Martin, G.R. and Lew, M (1999). "Recommended Procedures for Implementation of DMG Special Publication 117 – Guidelines for Analyzing and Mitigating Liquefaction in California." Southern California Earthquake Center.

64. Matasovic, N., Athanasopoulos-Zekkos, A., and Zekkos, D. (2008). "Validation of generic municipal solid waste material properties for seismic design of landfills." 4th Geotechnical Earthquake Engineering and Soil Dynamics Conference, Sacramento, CA, May 18-22, 2008.

65. National Cooperative Highway Research Program (NCHRP),
   - Transportation Research Board (2004). "Load and Resistance Factor Design (LRFD) for Deep Foundations." NCHRP Report 507.
   - Transportation Research Board (2006). "Riprap Design Criteria, Recommended Specifications, and Quality Control," Report 568.
   - "Seismic Analysis and Design of Retaining Walls, Buried Structures, Slopes and Embankments," Report 611, Chapter 7.

66. Priestley, M.J.N. and Calvi, G.M., "Strategies for Repair and Seismic Upgrading of Bolu Viaduct 1, Turkey", Journal of Earthquake Engineering, Vol. 6, Special Issue 1, pp. 157-184, 2002.

67. Rathje, E.M. and Saygili, G. (2008). "Probabilistic Seismic Hazard Analysis for the Sliding Displacement of Slopes: Scalar and Vector Approaches," Journal of Geotechnical and Geoenvironmental Engineering, ASCE, 134(6), 804-814.

RFP No.: 13-57 – Addendum No. 5 - 10/09/2014

68. Rollins, K. M., Gerber, T. M., Lane, J. D., and Ashford, S. A. (2005). "Lateral Resistance of a Full-Scale Pile Group in Liquefied Sand." ASCE Journal of Geotechnical and Geoenvironmental Engineering, Vol. 131, No. 1, pp. 115-125.

69. Saygili, G., and Rathje, E. M. (2008). "Empirical Predictive Models for Earthquake-Induced Sliding Displacements of Slopes." ASCE Journal of Geotechnical and Geoenvironmental Engineering, Vol. 134, No. 6, pp. 790-803.

70. Seed, R.B., and Harder, L.F., Jr. (1990). "SPT-based analysis of cyclic pore pressure generation and undrained residual strength." Proceedings of the H. Bolton Seed Memorial Symposium, May Vol. 2.

71. Seed, R.B., K, O., Cetin, R.E.S., Moss, A., Kammerer, J., Wu, J.M., Pestana, M.F., Riemer, R.B., Sancio, J.D., Bray, R.E., Kayen, R.E., Faris, A. (2003). "Recent Advances in Soil Liquefaction Engineering: A Unified and Consistent Framework." Keynote Address, 26th Annual Geotechnical Spring Seminar, Los Angeles Section of the GeoInstitute, American Society of Civil Engineers, H.M.S. Queen Mary, Long Beach, California, USA.

72. Shamoto, Y., Zhang, J., and Tokimatsu, K. (1998). "New Charts for Predicting Large Residual Post-Liquefaction Ground Deformation." Soil Dynamics and Earthquake Engineering 17, p. 427-438.

73. Sherard, J. L., Dunnigan, L. P., and Talbot, J. R. (1984a). "Basic Properties of Sand and Gravel Filters," Journal of the Geotechnical Engineering Division, ASCE, June, pp. 684-700.

74. Sherard, J. L., Dunnigan, L. P., and Talbot, J. R. (1984b). "Filters for Clays and Silts," Journal of the Geotechnical Engineering Division, ASCE, June, pp. 701-718.

75. Structural Welding Code, Steel, 1996 ANSI/AWS D1.1-96.

76. Taiwan High Speed Rail (THSR) Corporation: Volumes 1 and 3.

77. Taylor, D.W. (1937). "Stability of earth slopes." Journal of the Boston Society of Civil Engineers, 24(3).

78. Tokimatsu, K. and Seed, H.B. (1987). "Evaluation of Settlements in Sand Due to Earthquake Shaking." Journal of Geotechnical Engineering, ASCE Vol. 113, No. 8, pp. 861-878.

79. United States Army Corps of Engineers (USACE), EM-1110-2-1902, "Engineering and Design – Slope Stability." Oct. 2003.

80. United States Army Corps of Engineers (USACE), EM-1110-2-2901, "Engineering and Design - Tunnels and Shafts in Rock." May 1997.

81. Wells, D., and Coppersmith K., "New empirical relationships among magnitude, rupture length, rupture width, rupture area, and surface displacement", Bulletin of the Seismological Society of America, Vol. 84, pages 974-1002, 1994.

RFP No.: 13-57 – Addendum No. 5 - 10/09/2014

82. Wesnousky, Steven, 2008, "Displacement and Geometrical Characterization of Earthquake Surface Rupture: Issues and Implications for Seismic Hazard Analysis and the Process of Earthquake Rupture", Bull. Of the Seismological Society of America, vol. 98, No. 4, p. 1609.

83. Youd, T.L., and Garris, C.T. (1995). "Liquefaction-Induced Ground Surface Disruption." Journal of Geotechnical Engineering, ASCE, Vol. 121, No. 11.

84. Youd, T.L.; Hansen, C.M. and Bartlett, S.F. (2002). "Revised Multilinear Regression Equations for Prediction of Lateral Spread Displacement." ASCE Journal of Geotechnical and Geoenvironmental Engineering, Vol. 128, No. 12, pp. 1007-1017.

85. Youngs et al., (2003), A Methodology for Probabilistic Fault Displacement Hazard Analysis (PFDHA), Earthquake Spectra, Vol. 19, No. 1, p 191-219.

86. Zhang, G. Robertson P.K., Brachman, R.W.I. (2002). "Estimating Liquefaction-Induced Ground Settlements from CPT for Level Ground," Canadian Geotechnical Journal, Vol. 39, pp 1168-1180.

87. Zhang, G., Robertson, P. K., Brachman, R. W. I. (2004). "Estimating Liquefaction-Induced Lateral Displacements Using the Standard Penetration Test or Cone Penetration Test." ASCE Journal of Geotechnical and Geoenvironmental Engineering, Vol. 130, No. 8, pp. 861-871.

RFP No.: 13-57 – Addendum No. 5 - 10/09/2014

Appendix 10.C: Guidelines for Rock Slope Engineering

10.C.1 Purpose

These guidelines convey a minimum standard of care for performance of rock slope engineering design, mapping, and construction.

10.C.2 Design

Rock slopes are typically composed of heterogeneous rock masses with structural anisotropic systems of relatively regular discontinuities in the form of joint sets, bedding, fissures, or foliation. The strength and slope stability of these types of rock masses are typically controlled by the discontinuities. Analytical techniques for rock slope stability assessment shall consider the kinematic stability of blocks or groups of blocks sliding upon the discontinuities, toppling, or in terms of wedge failure. Limit equilibrium methods that calculate a factor of safety shall be used. These analyses shall consider blocks that are kinematically permissible as evaluated by the Markland (1972) method, block theory (Goodman and Shi 1985), or rock slope engineering techniques described by Hoek and Bray (1981) and Wyllie and Mah (2004). If computer software is used for rock slope stability analyses, it shall be well validated and widely accepted.

For rock mass consisting of homogeneous and isotropic rock masses with irregular and/or closely spaced discontinuities that do not have well defined systematic planes of weakness, the evaluation of the stability of these types of slopes shall be based on the non-circular limit equilibrium techniques described above for soil, except that a suitable rock strength model shall be used such as General Hoek-Brown criterion (Hoek et al. 2002; Wyllie and Mah, 2004; Hoek, 2010).

Where rock slopes exist upslope of HST facilities and have the potential to shed rock pieces over time, an evaluation of the rock fall hazard shall be performed in accordance with the procedures outlined in the FHWA and Oregon DOT (2001) Rockfall Catchment Area Design Guide. Computer programs that model rockfall physics such as the Colorado Rockfall Simulation Program (CRSP III) or RocFall (by RocScience), or other equivalent software, may be used in conjunction with the FWHA procedures. Rockfall catchment basin width and inclination shall be designed to retain 100 percent of fallen rocks. If right-of-way is not available to size catchment basins to achieve 100 percent rockfall retention, additional mitigation measures such as rockfall protection walls, wire mesh, cable drape, or catchment fences shall be used in the design. In areas where rock fall is a critical problem, a railway slide fence with electronic warning system shall be installed in conjunction with an appropriate catchment ditch and rock fall retention system described above. Other warning systems for rockfall events that may be considered are as follows:

- Acoustic sensing
- Electromagnetic sensing

RFP No.: 13-57 – Addendum No. 5 - 10/09/2014

- Seismic sensing
- Visual sensing, using cameras

Input data and parameters used in rock slope stability analyses shall take into consideration geology, groundwater and rainfall, and proposed geometry/topography. Rock engineering parameters shall be developed for use in slope stability analyses.

When available, empirical or historical data and direct observation within the geologic unit or the past performance of similar slopes shall be considered in slope stability evaluations. In particular, when assessing existing landslides, shear strength parameters back-calculated from previous failures shall be considered.

Drained shear strength parameters shall be selected, depending upon the rate of loading, and permeability characteristics of the rock. In the analysis of existing landslides, residual shear strengths shall be used for existing landslide slip planes. FHWA (2005) Section 4 shall be consulted for additional guidance on the selection of shear strength parameters.

10.C.3 Rock Slope Mapping and Condition Survey Requirements

The results of the mapping and condition surveys shall be used by the Geotechnical Designer to develop design and construction recommendations for treatment of exposed rock slopes and design of new rock cut slopes.

Under supervision of the Geotechnical Designer, qualified personnel trained in geology or engineering geology shall supervise and perform the rock slope mapping activities and data collection. A Certified Engineering Geologist (CEG) licensed in the State of California with at least 5 years of experience in rock slope design shall conduct slope condition surveys and rock mapping. Prior to mapping, the CEG shall be familiar with the local and regional geology. The mapping teams shall be knowledgeable of the rock units and structural and historical geologic aspects of the areas to be mapped.

10.C.4 Rock Slope Mapping

Procedures for mapping shall follow those given in the Rock Slopes Reference Manual, FHWA-HI-99-007, 1998, "Appendix I, Geologic Mapping," Parts 1, 2, and 3. At each mapping window, the CEG shall prepare a detailed section of the exposed cut.

Field observation data shall be recorded on approved forms similar to the 1 depicted on Figure AI-9a and b of the Rock Slope Reference Manual, FHWA-HI-99-007 and in field notebooks. Parameters described in the Rock Slope Reference Manual, FHWA-HI-99-007 (pages AI-3 to AI-14) shall be recorded. The following methods/assessments shall be used in the rock slope mapping:

- Use Project stationing to describe the location of rock mapping or rock slope condition observations. Record observation locations to within plus or minus 3 feet of actual Project

RFP No.: 13-57 – Addendum No. 5 - 10/09/2014

stations. Also, designate observation locations with a sequential numbering system. Orientation data shall be referenced to Project north (as shown on the plans).

- Color digital photographs (at least 10 megapixels) shall be taken of each mapping area and window. A scale shall be included in the window mapping photograph. Photographs shall be mounted on an 8 1/2 x 11-inch sheet and labeled.
- Feature specific photographs shall be taken, with a minimum of 1 photograph per window, and labeled.
- After the geologic mapping for a window has been completed, evaluate the rock slope at each mapping window using the Rock Slope Hazard Rating System presented in Chapter 10 of the Rock Slope Reference Manual.

10.C.5 Rock Excavation

Rock excavation surfaces shall be mapped to ensure that the final excavation surfaces are examined and to aid in the discovery of unanticipated adverse geologic conditions. The mapping shall serve as a permanent record of the geologic conditions encountered during construction.

For rocks that are prone to weathering and deterioration when exposed by excavation processes, the Geotechnical Designer in collaboration with the CEG shall develop measures to protect the rock surfaces to preserve the strength and character of the material.

Rock excavation may be done either by mechanical equipment; by using explosives in drill-and-blast operations, or both. However, blasting shall not be allowed in urban areas unless otherwise permitted per local building ordinances. If permitted, blasting of rock shall be undertaken by controlled blasting techniques (cushion [trim], pre-splitting, smooth-wall blasting, and line drilling). The Geotechnical Designer in collaboration with the CEG shall select the rock excavation method to minimize vibration, over-breaks, fly rock and air blast. A pre-blast survey shall also be undertaken. The Contractor shall repair any blast and vibration induced damage.

10.C.5.1 Quality Assurance During Blasting Operation

The Geotechnical Designer in collaboration with the CEG shall do the following:

- Obtain copies of applicable codes, standards, regulations, and ordinances, and keep readily accessible copies at the project field office at all times.
- Retain a blasting specialist who shall be responsible for supervision of field blasting operations and personnel, and have a minimum 15 years of blasting experience with 10 years experience in responsible charge of blasting operations. Such a blasting specialist shall possess required federal, state and local licenses and/or permits.

RFP No.: 13-57 – Addendum No. 5 - 10/09/2014

- Prepare a blasting plan for the areas to be excavated by means of controlled blasting. The plan shall describe the necessary items to excavate the rock using the controlled blasting techniques selected by the Geotechnical Designer.
- The Blasting Plan shall be prepared and signed by the blasting specialist.

10.C.5.2 Damage Repair

Damage to existing structures or property caused by the blasting shall be repaired by the Contractor.

The Geotechnical Designer shall notify the Authority immediately of any blasting-induced damage.

10.C.5.3 Fly Rock Control

The Contractor shall control fly rock at all times during construction.

10.C.5.4 Notification

The Contractor shall notify each adjoining property owner, the Authority, local agencies where applicable, in writing, prior to each blast. Indicate the date and time of the proposed blast, and include any safety precautions required of the adjoining property owner.

10.C.5.5 Photography

Photographs shall be taken before, during, and at the end of construction of excavated surfaces. Photos shall be properly labeled with date, subject, direction of view, vantage point, and photographer.

10.C.6 References

1. FHWA-HI-99-007, 1999, Rock Slopes Reference Manual.
2. Goodman, R.E. and Shi, G. (1985). *Block Theory and its Application to Rock Engineering,* Prentice-Hal, Englewood Cliffs, N.J.
3. Hoek, E. and Bray, J.W. (1981). "Rock Slope Engineering, Revised 3rd edition." The Institution of Mining and Metallurgy, London.
4. Hoek, E. (2010). "Practical Rock Engineering." in Rocscience 2010.
5. Hoek, E., Carranza-Torres, C.T., and Corkum, B. (2002). "Hoek-Brown failure criterion – 2002 edition." *Proc. North American Rock Mechanics Society meeting in Toronto in July 2002.*
6. Markland, J.T. (1972). "A Useful Technique if Estimating the Stability of Rock Slopes When the Rigid Wedge Sliding Type of Failure is Expected." *Imperial College Rock Mechanics Research Report No. 19*. London, Imperial College Press.

RFP No.: 13-57 – Addendum No. 5 - 10/09/2014

7. Wyllie, D.C and C.W. Mah (2004). "Rock Slope Engineering: Civil and Mining." 4th Edition, Spon Press.

RFP No.: 13-57 – Addendum No. 5 - 10/09/2014

Chapter 11

Seismic

RFP No.: 13-57 – Addendum No. 5 - 10/09/2014

Revision	Date	Description
0	02 Mar 12	Initial Release, R0
0.1	07 Dec 12	Addendum 7 – CP01
1	June 2013	Revision 1
2	Feb 2014	Revision 2

Table of Contents

11 SEISMIC 11-1
11.1 Scope 11-1
11.2 Regulations, Codes, Standards, and Guidelines 11-1
11.3 Seismic Design and Analysis Plan 11-3
11.4 Design Classifications 11-4
11.4.1 General Classifications 11-4
11.4.2 Technical Classification 11-6
11.5 Seismic Design Approach 11-7
11.5.1 Seismic Performance Criteria 11-7
11.5.2 Design Earthquakes 11-9
11.5.3 Retrofit of Existing Structures 11-11
11.5.4 Seismic Requirements for Temporary Construction Structures 11-11
11.6 Seismic Design Requirements 11-12
11.7 Bridges, Aerial Structures, and Grade Separations 11-12
11.7.1 Design Codes 11-12
11.7.2 Seismic Design Approach 11-13
11.7.3 Seismic Demands on Structural Components 11-15
11.7.4 Seismic Capacities of Structural Components 11-27
11.7.5 Seismic Performance Evaluation 11-30
11.8 Passenger Stations and Building Structures 11-32
11.8.1 Design Codes 11-33
11.8.2 Seismic Design Approach 11-33
11.8.3 Seismic Demands on Structural Components 11-34

Tables

Table 11-1: Performance Objectives/Acceptable Damage for NCL 11-8
Table 11-2: Performance Objectives/Acceptable Damage for OPL 11-9
Table 11-3: Seismic Design Requirements 11-12
Table 11-4: Applicable Bridge, Aerial Structure and Grade Separation Design Codes 11-13
Table 11-5: Applicable Passenger Station and Building Structure Design Codes 11-33

RFP No.: 13-57 – Addendum No. 5 - 10/09/2014

Acronyms

AASHTO	American Association of State Highway and Transportation Officials
ASCE	American Society of Civil Engineers
Authority	California High-Speed Rail Authority
BDS	Bridge Design Specifications
Caltrans	California Department of Transportation
CBC	California Building Code
CBDM	Caltrans Bridge Design Manuals
CQC	Complete quadratic combination
CSDC	Caltrans Seismic Design Criteria
D/C	Demand/Capacity
ELTHA	Equivalent linear time history analysis
ESA	Equivalent static analysis
HST	High-Speed Train
LDP	Linear Dynamic Procedure
LRFD	Load and Resistance Factor Design
MCE	Maximum Considered Earthquake
NCL	No Collapse Performance Level
NDP	Non-linear Dynamic Procedure
NSP	Non-linear Static Procedure
NLTHA	Non-linear time history analysis
OBE	Operating Basis Earthquake
OPL	Operability Performance Level
RSA	Response Spectrum Analysis
SDAP	Seismic Design and Analysis Plan
SRSS	Square root of the sum of the squares
SSI	Soil-structure interaction

Note: Additional Acronyms are found in Section 11.2 of this chapter.

RFP No.: 13-57 – Addendum No. 5 - 10/09/2014

11 Seismic

11.1 Scope

This chapter provides design classifications used to determine seismic design objectives for California High-Speed Train (HST) infrastructure design. Two design earthquakes and classification specific seismic performance objectives and acceptable damage are defined in this chapter.

The design classifications, design earthquakes, and performance objectives are used and referenced by the *Structures* and *Geotechnical* chapters.

This chapter provides seismic design criteria for the following infrastructure elements: bridges, aerial structures, grade separations, passenger stations and building structures.

Seismic design criteria for earthen or soil supporting structures, tunnels and underground structures are within the *Geotechnical* chapter.

11.2 Regulations, Codes, Standards, and Guidelines

Refer to the *General* chapter for requirements pertaining to regulations, codes, and standards. Design shall meet applicable portions of the general laws and regulations of the State of California and of respective local authorities.

The provisions within this chapter shall govern seismic design. The following current documents are either referenced by this chapter, or shall be considered as guidelines when sufficient criteria are not provided by this chapter.

- American Concrete Institute (ACI)
  - ACI 318: Building Code Requirements for Structural Concrete
  - ACI 350: Code Requirements for Environmental Engineering Concrete Structures and Commentary
- American Welding Society (AWS) Codes
  - AWS D1.1/D1.1M: Structural Welding Code-Steel
  - AWS D1.8/D1.8M: Structural Welding Code-Seismic Supplement
- American Association of State Highway and Transportation Officials (AASHTO)
  - AASHTO/AWS D1.5M/D1.5: Bridge Welding Code
  - AASHTO Guide Specifications for LRFD Seismic Bridge Design

RFP No.: 13-57 – Addendum No. 5 - 10/09/2014

- AASHTO Guide Specifications for Seismic Isolation Design
- AASHTO LRFD Bridge Construction Specifications

- California Building Code (CBC)
- American Railway Engineering and Maintenance-of-Way Association (AREMA)
  - Manual for Railway Engineering
- American Society of Civil Engineers (ASCE)
  - ASCE 7: Minimum Design Loads for Buildings and Other Structures
  - ASCE 41: Seismic Rehabilitation of Existing Buildings
- American Institute of Steel Construction (AISC)
  - Steel Construction Manual
- California Occupational Safety and Health Administration (Cal/OSHA) Department of Industrial Relations
- California Department of Transportation (Caltrans) Bridge Design Manuals (CBDM)
  - Caltrans Bridge Design Specification – AASHTO LRFD Bridge Design Specifications and California Amendments (to the AASHTO LRFD Bridge Design Specifications), hereafter referred to as "AASHTO LRFD BDS with California Amendments"
  - Caltrans Bridge Memo to Designers Manual (CMTD)
  - Caltrans Bridge Design Practices Manual (CBDP)
  - Caltrans Bridge Design Aids Manual (CBDA)
  - Caltrans Bridge Design Details Manual (CBDD)
  - Caltrans Seismic Design Criteria (CSDC)
  - Office of Special Funded Projects (OSFP) Information and Procedures Guide
- Code of Federal Regulations (CFR)
- United States Department of Transportation Federal Highway Administration; Technical Manual for Design and Construction of Road Tunnels – Civil Elements; Publication No. FHWA-NHI-09-010

RFP No.: 13-57 – Addendum No. 5 - 10/09/2014

11.3 Seismic Design and Analysis Plan

The Designer shall develop a Seismic Design and Analysis Plan (SDAP) for infrastructure elements including:

- bridges, aerial structures, and grade separations
- passenger stations and building structures
- earthen or soil supporting structures
- tunnels and underground structures

The SDAP shall define the following:

- the General Classification as Primary Type 1, Primary Type 2, or Secondary, as defined in Section 11.4.1
- the Technical Classification as Complex, Standard, or Non-Standard, as defined in Section 11.4.2

The SDAP shall contain detailed commentary on seismic analysis for each design earthquake per Section 11.5.2, including analysis during Operating Basis Earthquake (OBE) events as required in the Track-Structure Interaction section of the *Structures* chapter.

The SDAP shall be consistent with the Track-Structure Interaction Design and Analysis Plan (TSIDAP) required per the *Structures* chapter.

The SDAP shall indicate the analysis software to be used, modeling assumptions and techniques to be employed.

The SDAP shall contain commentary as to the suitability of linear versus nonlinear analysis, considering geological hazards, the severity of design ground motions, induced strains in the soil and structure, expected nonlinearities, and expected inelastic behavior.

The SDAP shall define the pre-determined mechanism for seismic response (i.e.: plastic hinging, foundation rocking, sacrificial shear keys, etc.) and the regions of targeted inelastic response.

The SDAP shall contain detailed commentary on the site-specific geological conditions identified during subsurface investigations required by the *Geotechnical* chapter. For Special Sites as defined in the *Geotechnical* chapter, the SDAP shall clearly define the approach for site response analysis as required per Section 11.5.2.2. The SDAP shall indicate the site response analysis software to be used and address potential soil nonlinearities.

For retrofit of existing structures, the SDAP shall provide a detailed discussion of the extent of retrofit and the proposed methodology to verify seismic performance. The required amount of retrofit will be determined by the Authority on a case by case basis.

The SDAP shall justify all seismic related design variances submitted per the *General* chapter.

RFP No.: 13-57 – Addendum No. 5 - 10/09/2014

Examples of seismic related design variances include:

- Exceedance of allowable material strain limits as given in Section 11.7.4.5 to 11.7.4.8. The SDAP shall specifically justify the reasons for exceeding the allowable strain limits.
- Exceedance of allowable deformation or rail stress limits during Operating Basis Earthquake (OBE) events as required in the Track-Structure Interaction section of the *Structures* chapter. The SDAP shall specifically justify the reasons for exceeding the allowable deformation or rail stress limits.
- The use of energy dissipation, seismic response modification, or base isolation systems. The SDAP shall discuss in detail the proposed use of any such system, including the nonlinear response, and the capacity under service (i.e., braking and acceleration, wind, etc.) loads and OBE events in order to meet criteria in the Track-Structure Interaction section of the *Structures* chapter.
- The use of any design spectra, ground motion time histories, and fault displacements other than those provided by the Authority. The SDAP shall specifically justify the use of such alternate items.
- Any expected in-ground flexural plastic hinging. The SDAP shall provide mitigating measures such as reduced ductility demand, and reference the reduced strain limits provided in Section 11.7.4.6.

11.4 Design Classifications

Infrastructure elements will provide a broad range of functions for the HST system.

General and technical classification provides a method to differentiate between seismic design objectives for the various elements of HST infrastructure.

11.4.1 General Classifications

Infrastructure elements, based on their importance to HST service, shall be generally classified as Primary Type 1, Primary Type 2, or Secondary.

Primary Type 1 – Primary Type 1 elements are those that directly support HST track, including, but not limited, to the following:

- Bridges, aerial structures, and grade separations that directly support HST track.
- Tunnels and underground structures that directly support HST track.
- Passenger stations and building structures that directly support HST track.
- Earthen or soil supporting structures, such as retaining walls, embankments, cut and existing slopes, and reinforced earth structure, that directly support HST track.

RFP No.: 13-57 – Addendum No. 5 - 10/09/2014

Primary Type 2 – Primary Type 2 elements are those that do not directly support HST track, but have the potential to affect HST track or service, including, but not limited, to the following:

- Highway, roadway, railway, and pedestrian structures that span over HST track.
- Train control, traction power, communication, operation, control, and equipment facilities essential for HST service.
- Tunnels and underground structures near HST track, where potential damage could affect HST track or service.
- Building structures near HST track, where potential damage could affect HST track or service.
- Earthen or soil supporting structures near HST track or facilities, such as retaining walls, embankments, cut and existing slopes, and reinforced earth structure, where potential damage could affect HST track or service.
- Structures or infrastructure not supporting HST track, but essential for HST service, including, but not limited, to:
  - Train control, communication and operation facilities
  - Traction power facilities
  - Other equipment facilities essential for HST service

Primary Type 2 structures owned by the Authority and Third Parties shall be subject to the seismic criteria in this chapter.

For retrofit of existing Primary Type 2 structures, see Section 11.5.3.

Secondary – Secondary elements are those not designated as Primary Type 1 or Primary Type 2, including, but not limited, to:

- Highway, roadway, railway, and pedestrian structures that do not span over HST track, where potential damage would not affect HST track or service.
- Tunnels and underground structures removed from HST track, where potential damage would not affect HST track or service.
- Building structures removed from HST track, where potential damage would not affect HST track or service, including, but not limited to:
  - Administrative buildings
  - Shop and maintenance buildings
  - Storage facilities
  - Parking structures
  - Training facilities

RFP No.: 13-57 – Addendum No. 5 - 10/09/2014

  - Other buildings or facilities not essential for HST service.

- Earthen or soil supporting structures removed from HST track, such as retaining walls, embankments, cut and existing slopes, and reinforced earth structure, where potential damage would not affect HST track or service.

Secondary structures owned by the Authority shall be subject to the seismic criteria in this chapter.

Secondary structures owned by Third Parties shall be subject to the seismic criteria of the governing local jurisdiction.

For retrofit of existing Secondary structures, see Section 11.5.3.

11.4.2 Technical Classification

Structures shall be technically classified, in order to determine the scope of seismic design requirements.

Complex Structures – Structures that have complex response during seismic events are considered Complex. Complex structural features include:

- **Irregular Geometry –** Structures that include multiple superstructure levels, variable width or bifurcating superstructures, tight horizontal curves (inside radius of curvature < 400 feet), large subtended horizontal angles (angle > 30°), or adjacent frames with corresponding transverse or longitudinal fundamental periods of vibration varying by greater than 25%.
- **Unusual Framing –** Structures with straddle, outrigger, or C-bent supports, or unbalanced mass and stiffness distribution not complying with CSDC's balanced stiffness and balanced frame geometry requirements.
- **Short Columns –** Structures with concrete columns having a ratio of clear height to greatest cross sectional dimension (H/D) less than 2.5. The clear height (H) is the visible length of column above grade and shall not include any embedded portion. The clear height (H) may be increased by the use of isolation casings extending below grade, provided that the casings allow access for column inspection.
- **Pier Walls –** Structures consisting of a wall on a footing or piles having a ratio of clear height to maximum wall width (H/W) less than 2.5. This is not applicable to seat type abutments with sacrificial transverse shear keys, refer to Section 11.7.5.9.
- **Tall Columns –** Structures with concrete columns having a ratio of clear height to least cross sectional dimension (H/D) > 10 in single curvature, or > 15 in double curvature.
- **Long Span Structures –** Structures that have spans greater than 300 feet.
- **Skewed Structures –** Structures with skewed bents or abutments > 15 degrees.
- **Lightweight Concrete –** Structures that consist of lightweight concrete. Lightweight concrete shall not be used for ductile earthquake resisting elements.

RFP No.: 13-57 – Addendum No. 5 - 10/09/2014

- **Energy Dissipation, Seismic Modification, or Base Isolation Devices –** Structures using energy dissipation, seismic response modification, or base isolation devices.
- **Unusual Foundation Systems –** Structures with foundations other than spread footings, caissons, piles, or drilled shafts.
- **Complex Geologic Conditions –** Structures that are subject to complex geologic conditions identified during subsurface investigation required by the *Geotechnical* chapter. Examples of complex geologic conditions include:
  - Soft, collapsible, or expansive soils
  - Soils having moderate to high liquefaction or other seismically induced ground deformation potential
  - When significantly varying types of soil occurs over the length of the structure
- **Tunnels or Underground Structures**
- **Structures at or in Close Proximity to Hazardous Faults –** Refer to Section 11.5.2.1 for hazardous fault definition**.**

Standard Structures – Structures that are not Complex Structures and have the following features:

- **Superstructure** – Simply supported prestressed concrete box girders or series of parallel concrete girders supporting a concrete deck, without skew
- **Substructure** – Single or multiple column bents having a ratio of clear height to the greatest cross sectional dimension (H/D) greater than 2.5.
- **Earthquake-Resisting System** – Above ground column flexural plastic hinging

Non-Standard Structures – Structures that are not Complex or Standard Structures.

11.5 Seismic Design Approach

The goal of these criteria is to safeguard against loss of life and major structural failures due to the Maximum Considered Earthquake (MCE), and interruption of HST operations due to structural or track damage and derailment caused by the Operating Basis Earthquake (OBE).

11.5.1 Seismic Performance Criteria

Two levels of seismic performance criteria are defined:

- **No Collapse Performance Level (NCL) –** For the NCL, Table 11-1 states the performance objectives and acceptable damage for Maximum Considered Earthquake (MCE) design.
- **Operability Performance Level (OPL) –** For the OPL, Table 11-2 states the performance objectives and acceptable damage for Operating Basis Earthquake (OBE) design.

RFP No.: 13-57 – Addendum No. 5 - 10/09/2014

Table 11-1: Performance Objectives/Acceptable Damage for NCL

Performance Level & Design Earthquake	Performance Objectives	Acceptable Damage
No Collapse Performance Level (NCL) Maximum Considered Earthquake (MCE)	<u>Primary Type 1</u> • Structures shall be designed for MCE ground motion with no collapse. • Occupants not on trains shall be able to evacuate the structure safely. • Damage and collapse due to train derailment shall be mitigated per the *Rolling Stock and Vehicle Intrusion Protection* and *Structures* chapters. • If derailment occurs, train passengers and operators shall be able to be evacuated from derailed trains safely per the *System Safety and Security* and *Structures* chapters. • Access for post-earthquake emergency services shall be provided for within design per the *System Safety and Security* chapter. • Extensive repairs or complete replacement of some system components may be required before train operation may resume. • For underground structures, no flooding or mud inflow. <u>Primary Type 2</u> • Structures shall be designed for MCE ground motion with no collapse. • Occupants shall be able to evacuate the structure safely. • Damage and collapse due to train derailment shall be mitigated per the *Rolling Stock and Vehicle Intrusion Protection* and *Structures* chapters. <u>Secondary (owned by Authority)</u> • Structures shall be designed for MCE ground motion with no collapse. • Occupants shall be able to evacuate the structure safely.	Significant yielding of reinforcement steel or structural steel. Minor fracturing of secondary and redundant steel members or rebar, with no collapse. Extensive cracking and spalling of concrete, with minimal loss of vertical load carrying capability. Large permanent offsets, without collapse Extensive damage to HST track, track support, and rail fasteners

RFP No.: 13-57 – Addendum No. 5 - 10/09/2014

Table 11-2: Performance Objectives/Acceptable Damage for OPL

Performance Level	Performance Objectives	Acceptable Damage
Operability Performance Level (OPL) Operating Basis Earthquake (OBE)	Primary Type 1 • Essentially elastic structural response • Occupants not on trains shall be able to evacuate the structure safely. • No derailment, trains shall be able to safely brake from the maximum design speed to a safe stop. • Train passengers and operators shall be able to evacuate stopped trains safely per the *System Safety and Security* and *Structures* chapters. • Structure and track designed to comply with Track-Structure Interaction section of the *Structures* chapter. • Minimal disruption of service for all systems supporting HST operations. • Resumption of HST operations within a few hours with the possibility of reduced speeds. • For underground structures, no flooding or mud inflow Primary Type 2 • Essentially elastic response of structural components where inelastic response (i.e.: cracking or spalling of concrete) could potentially affect HST operations. • Occupants shall be able to evacuate the structure safely. • Minimal disruption of service for all systems supporting HST operations. • Resumption of HST operations within a few hours with the possibility of reduced speeds. Secondary (owned by Authority) • OPL does not apply	Minor inelastic behavior, no spalling. No damage to HST track, track support, and rail fasteners Negligible permanent deformation of substructure and superstructure components.

11.5.2 Design Earthquakes

Two design earthquakes, the Maximum Considered Earthquake (MCE) and the Operating Basis Earthquake (OBE), are defined:

- **Maximum Considered Earthquake (MCE)** – Ground motions corresponding to greater of (1) a probabilistic spectrum based upon a 10% probability of exceedance in 100 years (i.e., a return period of 950 years); and (2) a deterministic spectrum based upon the largest median response resulting from the maximum rupture (corresponding to M_{max}) of any fault in the vicinity of the structure.
- **Operating Basis Earthquake (OBE)** – Ground motions corresponding to a probabilistic spectrum based upon an 86% probability of exceedance in 100 years (i.e., a return period of 50 years).

RFP No.: 13-57 – Addendum No. 5 - 10/09/2014

11.5.2.1 Hazardous Faults

All hazardous fault screening, characterization and displacement design values will be provided by the Authority.

The use of any fault characterization or displacements other than those provided by the Authority shall be subject to a design variance per the *General* chapter. The SDAP shall specifically justify the use of such alternate items.

11.5.2.2 Design Spectra and Ground Motion Time Histories

Design spectra and ground motion time histories will be provided by the Authority.

Each set of ground motion time histories provided by the Authority will consist of 2 orthogonal horizontal components, and 1 vertical component.

Where applicable, the specific directionality of the 2 orthogonal horizontal components (i.e.: fault-normal and fault-parallel directions) will be provided by the Authority including the fault and bearing angle. The specific directionality of the motions shall be retained by applying the motions to structural models along the given bearing angles directly, or transforming the motions to align with specific global or local coordinate systems of the structural models.

Where no specific directionality of the 2 orthogonal horizontal components exists, the motions shall be applied to the structural models directly, without transformation, along the global or local coordinate systems of the structural models. The Contractor may use engineering discretion as to which direction to apply each horizontal component, however all sets of motions shall be applied to structural models in a consistent and documented manner.

Refer to Section 11.7.3.3 for details regarding the application of the vertical component of motion.

At Special Sites, as defined in the *Geotechnical* chapter, referenced rock outcrop spectra and motions will be provided by the Authority. Site response analysis shall be used to determine the ground motions to be used for design.

The use of any design spectra or ground motion time histories other than those provided by the Authority shall be subject to a design variance per the *General* chapter. The SDAP shall specifically justify the use of such alternate items.

11.5.2.3 Time History Analysis for Final Design

When time history analysis is used for final design, then seven (7) sets of motions shall be used, and the average value of each response parameter (e.g., force or strain in a member, displacement or rotation at a particular location) shall be used for design.

For bridges, aerial structures, and grade separations, this shall apply to:

- ELTHA = Equivalent Linear Time History Analysis per Section 11.7.3.18

RFP No.: 13-57 – Addendum No. 5 - 10/09/2014

- NLTHA = Nonlinear Time History Analysis per Section 11.7.3.19

For passenger stations and building structures, this shall apply to:

- LDP = Linear Dynamic Procedure per Section 11.8.3.2
- NDP = Nonlinear Dynamic Procedure per Section 11.8.3.4

11.5.3 Retrofit of Existing Structures

See the *Structures* chapter for design considerations for Primary Type 2 structures, which addresses the retrofit of existing structures.

Existing Primary Type 2 structures shall be subject to NCL/MCE design.

Select components of existing Primary Type 2 structures shall be subject to OPL/OBE design, limited to those components where response to the OBE could potentially affect HST track or service. Examples of such response include the following:

- permanent damage which directly impedes HST safe passage (such as concrete spalls on tracks, component collapse on tracks, or loss of critical systems)
- elastic or inelastic deformations (temporary or permanent) that interfere with HST right of way and clearance envelopes
- damage resulting in significant interruption of HST service to facilitate inspection/repair

For example, OPL/OBE design would apply only to select components of existing Primary Type 2 highway, roadway, railway, and pedestrian structures that span over HST track, such as the superstructure above HST track or substructures adjacent to HST track. Components of Primary Type 2 structures removed from HST track, where response to OBE will not affect HST track or service, shall not be subject to OPL/OBE design.

Existing Secondary structures owned by the Authority shall be subject to NCL/MCE design only.

Existing Secondary structures owned by Third Parties shall be subject to the seismic criteria of the governing local jurisdiction.

A detailed discussion on the retrofit of existing structures shall be defined in the SDAP, per Section 11.3.

11.5.4 Seismic Requirements for Temporary Construction Structures

Temporary construction structures include new temporary structures and the temporary shoring and underpinning of existing structures. See the *Structures* chapter for design requirements for support and underpinning of structures.

RFP No.: 13-57 – Addendum No. 5 - 10/09/2014

For seismic requirements for temporary construction structures, the following design spectra and motions:

- 125% of the OBE design spectra and motions (to approximate a return period of 75 years), or
- a scaled OBE spectra so the scaled peak ground acceleration (PGA) equals 0.1g

whichever governs, shall apply.

For temporary construction structures, the performance requirements for NCL/MCE as given in Table 11-1 for Secondary Structures shall apply.

11.6 Seismic Design Requirements

For each general classification, Table 11-3 defines seismic design requirements for each seismic performance level and design earthquake.

Note that for Primary Type 1 structures, TSI/OBE refers to track and structure seismic performance during OBE events as defined in the Track-Structure Interaction section of the *Structures* chapter.

Table 11-3: Seismic Design Requirements

General Classification		
Primary Type 1	**Primary Type 2**	**Secondary**
NCL/MCE	NCL/MCE	NCL/MCE
OPL/OBE	OPL/OBE	--
TSI/OBE	--	--

11.7 Bridges, Aerial Structures, and Grade Separations

All Primary Type 1 and Primary Type 2 bridges, aerial structures, and grade separations shall be subject to both NCL/MCE and OPL/OBE seismic criteria herein.

All Secondary bridges, aerial structures, and grade separations owned by the Authority shall be subject to the NCL/MCE seismic criteria herein.

All Secondary bridges, aerial structures, and grade separations owned by Third Parties shall be subject to the seismic criteria of the governing local jurisdiction.

11.7.1 Design Codes

For NCL/MCE design, current Caltrans performance based design methods as given in CBDM form the basis of design. Certain criteria herein exceed those of CBDM. For items not specifically addressed in this or other Design Criteria chapters, CBDM shall be used. See the *Structures* chapter for the load combination including MCE events.

RFP No.: 13-57 – Addendum No. 5 - 10/09/2014

For OPL/OBE design, current Caltrans force based design methods as given in the AASHTO LRFD BDS with California Amendments form the basis of design. Certain criteria herein exceed those of the AASHTO LRFD BDS with California Amendments. See the *Structures* chapter for the load combinations including OBE events.

Table 11-4 summarizes the applicable seismic design code for each General Classification.

Table 11-4: Applicable Bridge, Aerial Structure and Grade Separation Design Codes

Performance/ Design Earthquake	General Classification		
	Primary Type 1	Primary Type 2	Secondary
NCL/MCE	CBDM	CBDM	CBDM
OPL/OBE	AASHTO LRFD BDS with California Amendments	AASHTO LRFD BDS with California Amendments	--
TSI/OBE	*Structures* chapter	--	--

11.7.2 Seismic Design Approach

The seismic design approach differs depending upon the design earthquake.

11.7.2.1 NCL/MCE Design Approach

For NCL/MCE design, the approach shall be:

- The structure shall have a clearly defined and pre-determined mechanism for seismic response, with targeted regions for inelastic response.
- Inelastic behavior shall be limited to columns and abutments, at above soil or water surface locations.
- Regions adjacent to inelastic behavior shall be capacity protected and perform as essentially elastic. The requirement for capacity protection does not depend on the seismic demand and shall apply regardless of elastic or inelastic column behavior under MCE loading.
- Seismic design and detailing requirements per CSDC shall be satisfied.

Allowable pre-determined mechanisms for NCL/MCE design include:

- Flexural Plastic Hinging (see Section 11.7.2.3)
- Foundation Rocking (see Section 11.7.2.1)
- Energy dissipation, seismic response modification, or base isolation systems (see Section 11.7.2.5)

11.7.2.2 OPL/OBE Design Approach

For OPL/OBE design, the approach shall be:

RFP No.: 13-57 – Addendum No. 5 - 10/09/2014

- The structure shall respond as essentially elastic.
- For Primary Type 1 structures, the structure and track seismic performance during OBE events shall comply with the Track-Structure Interaction section of the *Structures* chapter.

OPL/OBE demands shall be compared versus force-based capacities calculated per AASHTO LRFD BDS with California Amendments, Article 11.7.5.3.

11.7.2.3 Flexural Plastic Hinging

Flexural plastic hinging shall be limited to the columns. The location of plastic hinges shall be at above soil or water surface locations accessible for inspection and repair.

Non-fusing or capacity protected members shall be designed to prevent brittle failure mechanisms, such as footing shear, joint shear, column shear, tensile failure at the top of concrete footings, and unseating of girders. Non-fusing or capacity protected members shall be designed as essentially elastic, with 120% over-strength factor on the column plastic moment and shear applied. Consideration shall be made to column plastic hinging about all potential axes in the design of the foundation. The requirement for capacity protection does not depend on the seismic demand and shall apply regardless of elastic or inelastic column behavior under MCE loading

Modeling, analysis and design shall conform to CBDM and CSDC.

<u>In-ground flexural plastic hinging</u>

In-ground flexural plastic hinging may be unavoidable is special cases such as:

- Short column foundations
- Pier wall foundations in the transverse direction
- Complex geologic conditions, refer to Section 11.4.2

For cases involving in-ground hinging, a design variance shall be submitted per the *General* chapter, since such damage cannot be easily inspected. All seismic related design variances shall be identified and justified in the SDAP, as required in Section 11.3.

The design variance and SDAP shall specifically address in-ground hinging by providing mitigating measures, such as reduced in-ground ductility demand, and reference the reduced strain limits provided in Section 11.7.4.6.

11.7.2.4 Foundation Rocking

Foundation rocking is a design strategy based upon deliberately proportioning spread footing foundations to allow rocking, or transient uplift and separation of the foundation from the subsoil. Foundation rocking shall only apply to soils are not susceptible to loss of strength under the imposed cyclic loading.

RFP No.: 13-57 – Addendum No. 5 - 10/09/2014

Foundation rocking analysis is an iterative procedure which accounts for a lengthening of the structural period, increased damping, and subsequently reduced demands. The goal of foundation rocking is to limit column damage at the expense of significantly higher displacement demands at the superstructure.

Refer to Section 11.7.3.16 for foundation rocking methodology.

Foundation rocking shall not be allowed for Primary Type 1 structures.

Foundation rocking shall be allowed for NCL/MCE design for Primary Type 2 or Secondary Structures, except those designated as Complex per Section 11.4.2.

11.7.2.5 Energy Dissipation, Seismic Response Modification, or Base Isolation Systems

Energy dissipation, seismic response modification, or base isolation systems can be used to minimize damage, reduce seismic demands on substructures, and reduce foundation costs.

If energy dissipation, seismic response modification, or base isolation systems are proposed, then the use of such systems shall be subject to a design variance per the *General* chapter, and identified in the SDAP per Section 11.3.

For seismic isolation design, Caltrans implemented AASHTO Guide Specifications for Seismic Isolation Design shall apply.

Energy dissipation, seismic response modification, or base isolation systems shall contain sufficient capacity under service (i.e., braking and acceleration, wind, etc.) loads and OBE events, in order to meet criteria in the Track-Structure Interaction section of the *Structures* chapter.

11.7.3 Seismic Demands on Structural Components

In increasing order of complexity, analysis techniques include equivalent static analysis (ESA), response spectrum analysis (RSA), equivalent linear time history analysis (ELTHA), and nonlinear time history analysis (NLTHA).

For NCL/MCE design of Complex structures, NLTHA shall apply. For NCL/MCE design of Standard or Non-Standard structures, the appropriate analysis technique will depend upon the site specifics and structure.

For OPL/OBE design of the structure, a linear elastic analysis technique may be used. For Primary Type 1 structures, due to non-linear rail fastener slippage, NLTHA shall apply for rail-structure interaction analysis including the OBE. Refer to the *Structures* chapter.

11.7.3.1 Force Demands (F_U) for OPL/OBE

For OPL/OBE design, the ultimate force demand, F_u, shall be determined for all structural components.

RFP No.: 13-57 – Addendum No. 5 - 10/09/2014

For the structure, the loading combination shall be as specified in the *Structures* chapter.

11.7.3.2 Displacement Demands (Δ_D) for NCL/MCE

For NCL/MCE design, the global displacement demand, Δ_D, at the center of mass of the superstructure for each bent shall be determined, and compared versus the displacement capacity, Δ_C.

The loading combination shall be as specified in the *Structures* chapter.

11.7.3.3 Vertical Earthquake Motions

Where the MCE peak rock acceleration is 0.6g or greater, an equivalent static vertical load per CSDC shall be applied to the superstructure for design in order to estimate the effects of vertical acceleration.

For structures at or in close proximity to hazardous faults, as defined in Section 11.5.2.1, vertical motions shall be considered. This applies to the structural loading combinations as specified in the *Structures* chapter, and the loading combinations for OBE events as specified in the Track-Structure Interaction section of the *Structures* chapter.

11.7.3.4 Effective Sectional Properties

For NCL/MCE design, cracked bending and torsional moments of inertia for ductile substructure, and superstructure concrete members shall be per CSDC.

When moment-curvature analysis of concrete members is used, elemental cross sectional analysis shall be performed which considers the effects of concrete cracking, the degree of confinement, reinforcement yield and strain hardening, in accordance with CMTD and CSDC.

For structural steel sections, either moment-curvature analysis shall be performed which considers the stress-strain relationship of the structural steel, or effective section properties derived based upon the degree of nonlinearity shall be used. Effective section properties for structural steel components shall be consistent with AASHTO LRFD BDS with California Amendments and AISC Manual of Steel Construction.

For OPL/OBE design, effective bending moments of inertia for concrete column members shall consider the maximum moment demand, M_a, and the cracking moment, M_{cr}, in accordance with AASHTO LRFD BDS with California Amendments, Article 5.7.3.6.2. When using this method, the cracked moment of inertia, I_{cr}, shall be per CSDC. Alternatively, OBE effective sectional properties shall be directly found through the use of moment-curvature analysis.

RFP No.: 13-57 – Addendum No. 5 - 10/09/2014

11.7.3.5 Mass

Both elemental and lumped mass shall be used in analysis.

Translational and rotational elemental mass is based upon the mass density, length and cross sectional properties of discrete elements within the analytical model.

Translational and rotational lumped mass shall be based upon engineering evaluation of the structure, and consider items modeled as rigid (i.e., pile and bent caps), or items not explicitly modeled (i.e., non-structural mass).

Where applicable, train mass shall be considered per Section 11.7.3.12.

11.7.3.6 Material Properties for Demands

For NCL/MCE design, expected material properties shall be used in calculating the structural seismic demands in conformance with CSDC for concrete members and AASHTO LRFD BDS with California Amendments for structural steel members.

For OPL/OBE design, nominal material properties shall be used in calculating the structural seismic demands.

11.7.3.7 Flexural Plastic Hinging

Where flexural plastic hinging is used as the NCL/MCE seismic response mechanism of the structure, the analysis shall conform to CSDC methods and procedures.

11.7.3.8 Assessment of Track-Structure Interaction

For assessment of train and track-structure interaction, including requirements and load combinations which include OBE events, refer to the Track-Structure Interaction section of the *Structures* chapter.

11.7.3.9 Foundation Stiffness, Mass and Damping

Where applicable, foundation stiffness, mass and damping, including the effects of soil structure interaction, shall be considered for seismic analyses per the *Geotechnical* chapter.

11.7.3.10 Boundary Conditions

In cases where the structure is adjacent to or connected to other structures which are not included in the model (e.g.: adjacent spans or abutments), the model shall also contain appropriate elements at its boundaries to capture mass and stiffness effects of the adjacent structures.

For NCL/MCE abutment design, longitudinal and transverse response shall be similar to CSDC, considering the effects of cement treated gravel backfill, where used.

For OPL/OBE design of Primary Type 1 structures, abutment response shall be elastic.

RFP No.: 13-57 – Addendum No. 5 - 10/09/2014

After completion of static or dynamic analysis, a check shall be performed to verify that the boundary conditions and element properties are consistent with initial modeling assumptions.

11.7.3.11 Continuous Welded Rail

For structures that carry continuously welded rail, there may be benefits to structural performance during a seismic event provided by the rail system. The rails may serve as restrainers at the expansion joints tying adjacent frames together under seismic loading. However, this is complex behavior, which shall be substantiated and validated through analysis. The use of continuously welded rail to benefit structural performance shall be limited to OBE design only. Such use shall only be allowed for MCE design upon approval of a design variance. All seismic related design variances shall be identified and justified in the SDAP, as required in Section 11.3.

Since the rail system seismic response at the expansion joints is highly nonlinear, linear elastic analysis is not appropriate. Instead NLTHA, in accordance with Section 11.7.3.19, shall be performed which considers track-structure interaction.

The Track-Structure Interaction section of the *Structures* chapter contains details of the rail-structure interaction modeling methodology. The rail-structure interaction shall include the rails and fastening system, modeled to consider fastener slippage and rail stiffness. The fastener non-linear longitudinal restraint, transverse stiffness, and uplift capacity shall be accounted for in the analysis. Without these rail-structure interaction considerations, any structural performance benefits provided by continuous welded rail shall be ignored.

11.7.3.12 Train Mass and Live Load

For NCL/MCE design, train mass and live load shall not be considered.

For OPL/OBE design, train mass and live load shall be considered per load combinations defined in the *Structures* chapter. For all OBE load combinations, both strength and track-structure interaction per the *Structures* chapter, train loads may be modeled as equivalent static distributed loads, and train mass as stationary mass. Although equivalent distributed loads are used in the analysis, local design shall account for any effects due to actual concentrated axle loads.

For OBE strength load combinations, the following train effects shall be considered simultaneously:

<u>Single track structures</u>:

- One train vertical live load + impact
- One train longitudinal braking force
- Mass of 1 train, applied at the center of train mass

<u>Multiple track structures:</u>

RFP No.: 13-57 – Addendum No. 5 - 10/09/2014

One-half of trains potentially occupying the structure shall be considered. Where an odd number of trains potentially occupy the structure, round down to the nearest whole number of trains (example: for 3 trains, use 1/2(3) = 1.5 and round down to 1).

- 1/2 of the trains live load + impact
- 1/2 of trains longitudinal braking force (note: longitudinal braking force for multiple trains shall be applied in the same or opposite directions, whichever governs design)
- Mass of 1/2 of the trains, applied at the center of train mass

For OBE track-structure interaction load groups per the *Structures* chapter, the following train effects shall be considered simultaneously:

- One train vertical live load + impact
- One train longitudinal braking force, where applicable (Rail-Structure Interaction Only)
- Mass of 1 train, applied at the center of train mass

11.7.3.13 P-Δ Effects

For flexural plastic hinging, P-Δ effects shall be considered and conform to the requirements in CSDC.

For foundation rocking response, P-Δ effects shall be considered per Section 11.7.3.16.

11.7.3.14 Displacement Demand Amplification Factor

When ESA or RSA is used for NCL/MCE design, the displacement demand, Δ_D, obtained shall be multiplied by an amplification factor, C, as follows:

For $T^*/T_i > 1$: $C = [(1-1/\mu_d)/(T_i/T^*)] + (1/\mu_d)$

For $T^*/T_i \leq 1$: $C = 1.0$

Where:

T_i = fundamental period of structure (including foundation stiffness)

T^* = the site-specific characteristic ground motion period supplied by the Authority

μ_d = the target displacement ductility demand per CSDC

The amplification factor, C, shall be applied separately in both orthogonal directions prior to obtaining the orthogonal combination of seismic displacement.

The amplification factor, C, shall not apply to foundation rocking analysis.

RFP No.: 13-57 – Addendum No. 5 - 10/09/2014

11.7.3.15 Equivalent Static Analysis

Equivalent Static Analysis (ESA) may be used to determine earthquake demands, E:

- For NCL/MCE design, the Displacement Demand, Δ_D, at the center of mass of the superstructure.
- For OPL/OBE design, the Force Demands, F_u

where the structure can be characterized as a single-degree-of-freedom (SDOF) system, and more sophisticated dynamic analysis will not add significantly more insight into behavior.

For NCL/MCE and OPL/OBE design, ESA shall apply to Standard or Non-Standard structures with the following characteristics:

- No skew.
- Single column piers or multiple column bents where most of the structural mass is concentrated at a single level.
- The fundamental mode of vibration is uniform translation.
- Well defined lateral force distribution due to balanced spans, and bents with approximately equal stiffness.

ESA shall not apply to Complex structures.

ESA earthquake demands shall be determined from horizontal spectra by either of 2 methods:

- Method 1 – Earthquake demand, $E = (E_L^2 + E_T^2)^{1/2}$, where E_L and E_T are the responses due to longitudinal and transverse direction earthquake motions as defined below. The application of ground motion shall be along the principal axes of individual components.
- Method 2 – Earthquake demand, E, by using the 100%-30% rule, for 2 cases:

Case 1: $E = 1.0E_L + 0.3E_T$

Case 2: $E = 0.3E_L + 1.0E_T$

For calculation of ESA earthquake demands for both Methods 1 and 2:

Longitudinal: $E_L = C * S_a^L * W$

Transverse: $E_T = C * S_a^T * W$

Where:

C = the amplification factor, C, given in Section 11.7.3.14, for NCL/MCE design only

S_a^L = longitudinal acceleration response spectral value at period T_L

RFP No.: 13-57 – Addendum No. 5 - 10/09/2014

T_L = fundamental period of structure in the longitudinal direction (including foundation stiffness)

S_a^T = transverse acceleration response spectral value at period T_T

T_T = fundamental period of structure in the transverse direction (including foundation stiffness)

W = tributary dead load + superimposed dead load for NCL/MCE design

W = tributary dead load + superimposed dead load + train mass and live load per Section 11.7.3.12 for OPL/OBE design.

Effective sectional properties shall be used per Section 11.7.3.4. Material properties shall be used per Section 11.7.3.6.

An equivalent linear representation of foundation stiffness shall be used. Iteration shall be performed until the equivalent linear foundation stiffness converges (i.e., the assumed stiffness is consistent with the calculated response).

For both NCL/MCE and OPL/OBE design, the 5% damped response spectra shall be used to determine S_a.

11.7.3.16 Foundation Rocking Analysis

Where foundation rocking is allowed per Section 11.7.2.4, the procedure presented in AASHTO Guide Specifications for LRFD Seismic Bridge Design, Appendix A: Foundation-Rocking Analysis shall be used for design. Design for P-Δ effects and column plastic hinging requirements are included within this reference.

For NCL/MCE design, should column plastic hinging occur concurrent with foundation rocking response, then all non-fusing or capacity protected members including the foundation, if applicable, shall be designed as essentially elastic, with 120% over-strength factor on the column plastic moment and shear applied.

No constraints such as tracks, ballast, significantly large soil overburden, concrete slabs or other infrastructure shall be placed over foundations designed for rocking. When determining the rocking response, consideration shall be given to possible future conditions, such as a change in depth of the soil cover above the footing or other loads that may affect rocking response.

Foundation rocking is limited to cases where the subsoil is not susceptible to loss of strength under cyclic loading, and the footing can be considered to be supported on a rigid perfectly plastic soil with uniform compressive capacity. Special detailing may be required to ensure that plastic soil deformations do not reduce the effective length of contact between the footing and soil. Where applicable, the Geotechnical Reports required by the *Geotechnical* chapter shall provide design parameters for foundation rocking analysis.

RFP No.: 13-57 – Addendum No. 5 - 10/09/2014

11.7.3.17 Response Spectrum Analysis

Response Spectrum Analysis (RSA) shall be used to determine earthquake demands, E:

- For NCL/MCE design, the Displacement Demand, Δ_D, at the center of mass of the superstructure
- For OPL/OBE design, the Force Demands, F_u

where ESA provides an unrealistic estimate of the dynamic behavior.

For NCL/MCE and OPL/OBE design, RSA shall apply to Standard or Non-Standard structures with the following characteristics:

- Skewed bents or abutments ≤ 15 degrees
- Single column pier or multiple column bents
- Response primarily captured by the fundamental structural mode shapes containing a minimum of 90% mass participation in the longitudinal and transverse directions

For NCL/MCE design, RSA shall not apply to Complex structures.

For OPL/OBE design, RSA may apply to Complex structures, upon approval of the SDAP per Section 11.3.

RSA involves creating a linear, three dimensional dynamic model of the structure, with appropriate representation of all material properties, structural stiffness, mass, boundary conditions, and foundation characteristics. The dynamic model is used to determine the fundamental structural mode shapes. A sufficient number of mode shapes shall be included to account for a minimum of 90% mass participation in the longitudinal and transverse directions.

Care shall be taken to ensure 90% mass participation for long aerial structure models. The Designer shall examine the mode shapes to ensure that they sufficiently capture the behavior of the structure.

A linear elastic multi-modal spectral analysis shall be performed using the 5% damped response spectra. The modal response contributions shall be combined using the complete quadratic combination (CQC) method.

For NCL/MCE and OPL/OBE design, modal damping shall be 5%.

For NCL/MCE design, RSA based on design spectral accelerations will likely predict forces in some elements that exceed their elastic limit, the presence of which indicates nonlinear behavior. The Designer shall recognize that forces generated by RSA could vary considerably from the actual force demands on the structure. Sources of nonlinear response not captured by RSA include the effects of surrounding soil, yielding of structural members, opening and closing of expansion joints, plastic hinging, and nonlinear restrainer and abutment behavior.

RFP No.: 13-57 – Addendum No. 5 - 10/09/2014

Where there is a change in soil type along the bridge alignment, consideration shall be made to the possibility that out-of-phase ground displacements at 2 adjacent piers may increase the computed demand on expansion joints, rails or columns. This effect is not explicitly considered in RSA. In such cases, more sophisticated time history analyses shall be used.

Appropriate linear stiffness shall be assumed for abutments and expansion joints similar to CSDC, considering the effects of cement treated gravel backfill, where used. Analyses shall be performed for compression models (abutments engaged, gaps between frames closed) and for tension models (abutments inactive, gaps between frames open), to obtain a maximum response envelope. If analysis results show that soil capacities are exceeded at an abutment, iterations shall be performed with decreasing soil spring constants at the abutment per CSDC recommendations.

For calculation of differential displacements at expansion joints and for calculation of column drift, the analysis shall either explicitly compute these demands as modal scalar values or assume that the displacements and rotations combine to produce the highest or most severe demand on the structure.

RSA demands shall be determined from horizontal spectra by either of the 2 following methods:

- Method 1 – Earthquake demand, $E = (E_L^2 + E_T^2)^{1/2}$, where E_L and E_T are the responses due to longitudinal and transverse earthquake spectra as defined below. The application of ground motion shall be along the principal axes of individual components.
- Method 2 – Earthquake demand, E, by using the 100%-30% rule, for 2 cases:

Case 1 : $E = 1.0E_L + 0.3E_T$

Case 2 : $E = 0.3E_L + 1.0E_T$

For calculation of RSA earthquake demands:

Longitudinally: $E_L = C$ * (RSA demands from longitudinal earthquake spectra)

Transversely: $E_T = C$ * (RSA demands from transverse earthquake spectra)

Where:

C = the amplification factor per Section 11.7.3.14, for NCL/MCE design only

Effective sectional properties shall be used per Section 11.7.3.4. Material properties shall be used per Section 11.7.3.6.An equivalent linear representation of foundation stiffness shall be used. Iteration shall be performed until the equivalent linear foundation stiffness converges (i.e., the assumed stiffness is consistent with the calculated response).

For NCL/MCE design, dead and superimposed dead loads shall be applied as an initial condition.

RFP No.: 13-57 – Addendum No. 5 - 10/09/2014

For OPL/OBE design, in addition to dead and superimposed dead loads, train mass and live load shall be considered per Section 11.7.3.12.

After completion of each RSA, the Designer shall verify that structural members which are modeled as elastic do remain elastic and satisfy strength requirements.

11.7.3.18 Equivalent Linear Time History Analysis

Equivalent Linear Time History Analysis (ELTHA) shall be used to determine earthquake demands, E:

- For NCL/MCE design, the Displacement Demand, Δ_D, at the center of mass of the superstructure
- For OPL/OBE design, the Force Demands, F_u

where ESA or RSA provides an unrealistic estimate of the dynamic behavior.

For NCL/MCE and OPL/OBE design, ELTHA shall apply to Standard or Non-Standard structures with the following characteristics:

- Skewed bents or abutments ≤ 15 degrees
- Single column pier or multiple column bents

For NCL/MCE design, ELTHA shall not apply to Complex structures.

For OPL/OBE design, ELTHA may apply to Complex structures, upon approval of the SDAP per Section 11.3.

ELTHA involves creating a three dimensional dynamic model of the structure, with appropriate representation of all material properties, structural stiffness, mass, boundary conditions, and foundation characteristics.

For NCL/MCE and OPL/OBE design, motions consistent with the 5% damped response spectra shall be used. Consideration of vertical earthquake motions shall be considered per Section 11.7.3.3.

For NCL/MCE and OPL/OBE design, structural damping shall be 5%.

Should Rayleigh damping be used for ELTHA, it requires the calculation of both stiffness and mass proportional coefficients anchored at 2 structural frequencies, which shall envelope all important modes of structural response. The lower anchoring frequency (i.e., longest period) shall be determined using effective section properties per Section 11.7.3.4 and by reducing the resulting lowest natural frequency by 10%. The higher anchoring frequency (i.e., shortest period) shall be chosen such that a minimum of 90% mass participation in the longitudinal, transverse directions are mobilized.

RFP No.: 13-57 – Addendum No. 5 - 10/09/2014

Effective sectional properties shall be used per Section 11.7.3.4. Material properties shall be used per Section 11.7.3.6.

Appropriate linear stiffness shall be assumed for abutments and expansion joints similar to CSDC, considering the effects of cement treated gravel backfill, where used. Analyses shall be performed for compression models (abutments engaged, gaps between frames closed) and for tension models (abutments inactive, gaps between frames open), to obtain a maximum response envelope. If analysis results show that soil capacities are exceeded at an abutment, iterations shall be performed with decreasing soil spring constants at the abutment per CSDC recommendations.

An equivalent linear representation of foundation stiffness shall be used. Iteration shall be performed until the equivalent linear foundation stiffness converges (i.e., the assumed stiffness is consistent with the calculated response).

For NCL/MCE design, dead and superimposed dead loads shall be applied as an initial condition.

For OPL/OBE design, in addition to dead and superimposed dead loads, train mass and live load shall be considered per Section 11.7.3.12.

After completion of each ELTHA, the Designer shall verify that structural members which are modeled as elastic do remain elastic and satisfy strength requirements.

11.7.3.19 Nonlinear Time History Analysis

Nonlinear Time History Analysis (NLTHA) shall be used to determine earthquake demands, E:

- For NCL/MCE design, the Displacement Demand, Δ_D, at the center of mass of the superstructure
- For OPL/OBE design, the Force Demands, F_u

where ESA, RSA or ELTHA provides an unrealistic estimate of the dynamic behavior, provides overly conservative demands, or where nonlinear response is critical for design.

For NCL/MCE design, NLTHA shall apply to Complex structures.

For OPL/OBE design, NLTHA, ELTHA, or RSA may apply to Complex structures, upon approval of the SDAP per Section 11.3.

For TSI/OBE design of Primary Type 1 structures, due to required track and structure seismic performance during OBE events per the Track-Structure Interaction section of the *Structures* chapter, NLTHA shall be used.

NLTHA involves creating a three dimensional dynamic model of the structure, with appropriate representation of all material properties, structural stiffness, mass, boundary conditions, and foundation characteristics. This dynamic model is used to determine the

RFP No.: 13-57 – Addendum No. 5 - 10/09/2014

dynamic characteristics of the structure by including selected nonlinear representations of structural and foundation elements.

For NCL/MCE and OPL/OBE design, motions consistent with the 5% damped response spectra shall be used. Consideration of vertical earthquake motions shall be considered per Section 11.7.3.3.

For NCL/MCE and OPL/OBE design, structural damping shall be 5%.

Should Rayleigh damping be used for NLTHA, it requires the calculation of both stiffness and mass proportional coefficients anchored at 2 structural frequencies, which shall envelop all important modes of structural response. The lower anchoring frequency (i.e., longest period) shall be determined using effective section properties per Section 11.7.3.4 and by reducing the resulting lowest natural frequency by 10%. The higher anchoring frequency (i.e., shortest period) shall be chosen such that a minimum of 90% mass participation in the longitudinal, transverse directions are mobilized.

Effective sectional properties or moment-curvature analysis shall be used per Section 11.7.3.4. Material properties shall be used per Section 11.7.3.6.

Appropriate linear stiffness may be assumed for abutments and expansion joints similar to CSDC, considering the effects of cement treated gravel backfill, where used. Analyses shall be performed for compression models (abutments engaged, gaps between frames closed) and for tension models (abutments inactive, gaps between frames open), to obtain a maximum response envelope. If analysis results show that soil capacities are exceeded at an abutment, iterations shall be performed with decreasing soil spring constants at the abutment per CSDC recommendations. Otherwise, nonlinear representations of abutment and expansion joint characteristics shall be used.

Where applicable, an equivalent linear representation of foundation stiffness shall be used, and iteration shall be performed until the equivalent linear foundation stiffness converges (i.e., the assumed stiffness is consistent with the calculated response). Otherwise, nonlinear representations of foundation characteristics shall be used.

For NCL/MCE design, dead and superimposed dead loads shall be applied as an initial condition.

For OPL/OBE design, in addition to dead and superimposed dead loads, train mass and live load shall be considered per Section 11.7.3.12.

After completion of each NLTHA, the Designer shall verify that structural members which are modeled as elastic do remain elastic and satisfy strength requirements.

RFP No.: 13-57 – Addendum No. 5 - 10/09/2014

11.7.4 Seismic Capacities of Structural Components

11.7.4.1 Force Capacities (ΦF_N) for OPL/OBE

For OPL/OBE design, LRFD force capacities, ΦF_N, for all structural components shall be found in accordance with AASHTO LRFD BDS with California Amendments. Nominal material properties shall be used when determining OBE capacities.

11.7.4.2 Displacement Capacity (Δ_C) for NCL/MCE

For NCL/MCE design employing flexural plastic hinging using ESA, RSA, and ELTHA demands, the displacement capacity, Δ_C, shall be determined by nonlinear static pushover analysis, as described in Section 11.7.4.3. The displacement capacity shall be defined as the controlling structure displacement that occurs when any element of targeted inelastic response reaches its allowable capacity in the pushover analysis. The allowable capacity is reached when the concrete or steel strain of any element of targeted inelastic response meets the allowable strains specified in Sections 11.7.4.5 to 11.7.4.8.

If moment curvature representation of plastic hinging is used for NLTHA, then the curvature demands shall be converted to concrete or steel strains, and verified versus allowable strains specified in Sections 11.7.4.5 to 11.7.4.8.

The displacement capacity, Δ_C, shall include all displacements attributed to flexibility in the foundations, bent caps, and other elastic and inelastic member responses in the system. The assumptions made to determine the displacement capacity, Δ_C, shall be consistent with those used to determine the displacement demand, Δ_D.

All capacity protected structural members and connections shall satisfy requirements in Section 11.7.5.5.

11.7.4.3 Nonlinear Static Pushover Analysis

For NCL/MCE design employing flexural plastic hinging, the following procedure shall be followed to determine the displacement capacity, Δ_C, using nonlinear static pushover analysis.

Dead and superimposed dead load shall be applied as an initial step.

Incremental lateral displacements shall be applied to the system. A plastic hinge shall be assumed to form in an element when the internal moment reaches the idealized yield limit in accordance with Section 11.7.3.7. The sequence of plastic hinging through the frame system shall be tracked until an ultimate failure mode is reached. The system capacity shall then be determined in accordance with CSDC.

11.7.4.4 Plastic Hinge Rotational Capacity

Plastic moment capacity of ductile flexural members shall be calculated by moment-curvature (M-ϕ) analysis and shall conform to CSDC for concrete members and AASHTO LRFD BDS with California Amendments for structural steel members.

RFP No.: 13-57 – Addendum No. 5 - 10/09/2014

The rotational capacity of any plastic hinge is defined as the product of the plastic hinge length, as defined by CSDC for concrete members and AASHTO LRFD BDS with California Amendments for structural steel members, and the curvature (from M-ϕ analysis) when the element of targeted inelastic response first reaches the allowable strains in Sections 11.7.4.5 to 11.7.4.8.

11.7.4.5 Strain Limits for Ductile Reinforced Concrete Members

For NCL/MCE design, the following reinforcing steel (A706/Grade 60) allowable tensile strain limits (ε_{su}^{a}) shall apply for ductile reinforced concrete members:

$$\text{NCL/MCE:} \quad \varepsilon_{su}^{a} \leq 2/3\ \varepsilon_{su}$$

Where: ε_{su} = ultimate tensile strain per CSDC

For NCL/MCE design, the following allowable confined concrete compressive strain limits (ε_{cu}^{a}) shall apply for ductile reinforced concrete members:

$$\text{MCE:} \quad \varepsilon_{cu}^{a} \leq \boldsymbol{\varepsilon_{cu}}$$

Where: ε_{cu} = ultimate compressive strain as computed by Mander's model for confined concrete.

11.7.4.6 Reduced Strain Limits for Ductile Reinforced Concrete Caissons, Piles, and Drilled Shafts

For cases involving in-ground hinging, a design variance shall be submitted per the *General* chapter, since such damage cannot be easily inspected. All seismic related design variances shall be identified and justified in the SDAP, as required in Section 11.3.

Where in-ground hinging is allowed by variance, the following reduced strain limits for ductile reinforced concrete caissons, piles, and drilled shafts apply:

For NCL/MCE design, the following reinforcing steel (A706/Grade 60) allowable tensile strain limit (ε_{su}^{a}) shall apply for ductile reinforced concrete caissons, piles, and drilled shafts:

$$\text{NCL/MCE:} \quad \varepsilon_{su}^{a} \leq \varepsilon_{sh}$$

Where: ε_{sh} = tensile strain at the onset of strain hardening per CSDC

For NCL/MCE design, the following allowable confined concrete compressive strain limits (ε_{cu}^{a}) shall apply for ductile reinforced concrete caissons, piles, and drilled shafts:

$$\text{MCE:} \quad \varepsilon_{cu}^{a} \leq \text{lesser of } 0.008 \text{ or } 0.33\varepsilon_{cu} \text{ or } 1.5\ \varepsilon_{cc}$$

Where: ε_{cu} = ultimate compressive strain as computed by Mander's model for confined concrete

RFP No.: 13-57 – Addendum No. 5 - 10/09/2014

ε_{cc} = strain at maximum concrete compressive stress as computed by Mander's model for confined concrete.

11.7.4.7 Strain Limits for Unconfined Concrete

Unconfined compressive strain limits shall be applied to concrete members without sufficient lateral reinforcement to be considered confined. If the lateral reinforcement does not meet the requirements of CBDM for confinement, the section shall be considered unconfined.

For NCL/MCE design, the following allowable concrete unconfined compressive strain limit (ε_{cu}^{a}) applies:

$\varepsilon_{cu}^{a} = 0.005$, for above and below ground concrete

For NCL/MCE design, there are no allowable strain requirements for unconfined cover concrete.

11.7.4.8 Strain Limits for Structural Steel Elements

For NCL/MCE design, the following structural steel allowable tensile strain limits (ε_{su}^{a}) apply:

NCL/MCE: $\varepsilon_{su}^{a} \leq 2/3\ \varepsilon_{su}$

Where: ε_{su} = ultimate tensile strain

Structural steel allowable compressive strain limits shall be determined based upon governing local or global buckling in accordance with AASHTO LRFD BDS with California Amendments, using expected material properties.

11.7.4.9 Foundation Rocking Capacity

For NCL/MCE design, where foundation rocking is allowed per Section 11.7.2.4, the foundation rocking capacity shall be determined per Section 11.7.3.16.

11.7.4.10 Material Properties for Capacities

For NCL/MCE design, the plastic moment capacity of all ductile concrete members shall be based upon expected material properties. Where brittle failure is a concern, such as shear, joint shear or torsion, capacities shall be based upon nominal material properties. Expected material properties shall conform to CSDC for concrete members and AASHTO LRFD BDS with California Amendments for structural steel members.

For OPL/OBE design, nominal material properties shall be used in calculating all capacities.

11.7.4.11 Shear Capacity

For NCL/MCE design, the shear capacity of ductile components shall conform to CSDC for concrete members and AASHTO LRFD BDS with California Amendments for structural steel members.

RFP No.: 13-57 – Addendum No. 5 - 10/09/2014

11.7.4.12 Joint Internal Forces

Continuous force transfer through the column/superstructure and column/footing joints shall conform to CSDC. These joint forces require that the joint have sufficient over-strength to ensure essentially elastic behavior in the joint regions based on the capacity of the adjacent members.

11.7.5 Seismic Performance Evaluation

11.7.5.1 Definition of Essentially Elastic

For both NCL/MCE over-strength and OPL/OBE general design, "essentially elastic" is defined as when the LRFD force capacities (ΦF_N) exceed the over-strength or factored demands.

11.7.5.2 Foundation Rocking

For NCL/MCE design, where foundation rocking is allowed per Section 11.7.2.4, seismic performance evaluation shall be per Section 11.7.3.16.

11.7.5.3 Force Based Design for OPL/OBE

For OPL/OBE design, the maximum force based Demand/Capacity (D/C) Ratio shall be:

$$F_U / \Phi F_N \leq 1.0$$

Where:

F_U = the force demand, as defined in Section 11.7.3.1.

ΦF_N = the LRFD force capacity, as defined in Section 11.7.4.1.

in order to satisfy the OPL performance objectives specified in Section 11.5.1.

11.7.5.4 Displacement Based Design for NCL/MCE

For NCL/MCE design, the maximum displacement Demand/Capacity Ratio shall be:

$$\Delta_D / \Delta_C \leq 1.0$$

Where:

Δ_D = the displacement demand, as defined in Section 11.7.3.2.

Δ_C = the displacement capacity, based on strain limits, as defined in Section 11.7.4.2.

in order to satisfy the NCL performance objectives specified in Section 11.5.1.

11.7.5.5 Capacity Protected Element Design

In order to limit the inelastic deformations to the prescribed element of targeted inelastic response, the plastic moments and shears of the element of targeted inelastic response shall be

RFP No.: 13-57 – Addendum No. 5 - 10/09/2014

used in the demand/capacity analysis of any adjacent capacity-protected elements of the structure.

Component 120% over-strength factors for the evaluation of capacity-protected elements shall be applied as specified in CSDC for concrete members and AASHTO LRFD BDS with California Amendments for structural steel members.

11.7.5.6 Soil Improvement

The Geotechnical Reports required by the *Geotechnical* chapter shall provide information and design parameters regarding soil improvement.

11.7.5.7 Design of Shallow Foundations

The Geotechnical Reports required by the *Geotechnical* chapter shall provide information and design parameters regarding the design of shallow foundations.

Shallow foundations shall be designed as capacity protected structural elements under any loading or combination of loadings, including seismic loads. When designing for footing shear, column-to-footing joint shear, and moments in footings, the column plastic moment and shear shall be used with 120% over strength factors applied.

11.7.5.8 Design of Deep Foundations

The Geotechnical Reports required by the *Geotechnical* chapter shall provide information and design parameters regarding the design of deep foundations, such as bored or driven piles, drilled shafts, or caissons.

Deep foundations shall be designed as capacity protected structural elements under any loading or combination of loadings, including seismic loads. When designing for pile/drilled shaft cap shear, column-to-pile/drilled shaft cap joint shear, and moments in pile/drilled shaft cap, the column plastic moment and shear shall be used with 120% over-strength factors applied.

If below ground plastic hinging is unavoidable in caissons, piles or drilled shafts, such as at potentially liquefiable or exceptionally soft soil sites, then a design variance shall be submitted per the *General* chapter. All seismic related design variances shall be identified and justified in the SDAP, as required in Section 11.3.

The design of deep foundations shall be in accordance with CBDM.

11.7.5.9 Expansion Joints, Seat Width, Restrainers, and Shear Keys

Structural expansion joints shall provide free movement (i.e.: no pounding) for OPL/OBE design. Local damage to structural expansion joints is allowed for NCL/MCE design, in accordance with CBDM.

RFP No.: 13-57 – Addendum No. 5 - 10/09/2014

Relative expansion joint displacements (longitudinal, transverse, and vertical) for load cases including OBE shall comply with limits contained within the Track-Structure Interaction section of the *Structures* chapter.

Adequate seat width at expansion joints and abutments shall be provided to prevent unseating of the structure, and shall comply with CSDC.

Expansion joint restrainers may be designed to limit relative longitudinal expansion joint displacements for OPL/OBE response; design shall be in accordance with CBDM.

Sacrificial components, such as seat type abutment shear keys, are not subject to capacity protection under NCL/MCE design. Additional restraint shall be considered if stability is questionable after shear keys are severely damaged.

For Primary Type 1 structures, seat type abutment shear keys shall be designed as essentially elastic for OPL/OBE design.

For NCL/MCE design, when excessive longitudinal or transverse seismic displacement must be prevented, non-sacrificial shear keys shall be provided and designed as capacity-protected elements.

11.7.5.10 Columns

Columns shall satisfy the detailing requirements for ductile structural elements as specified in CSDC. Ductile detailing requirements apply to all columns, even those designed to be essentially elastic due to foundation rocking or energy dissipation, seismic response modification, or base isolation systems.

The use of lightweight concrete is not allowed in columns.

The column reinforcement ratio shall be kept below 4% to reduce congestion due to added joint reinforcement. Column reinforcement shall not be adjusted for drain pipes or other utilities in potential plastic hinge zones. For column flare design and detailing, CSDC shall apply.

11.7.5.11 Superstructures and Bent Caps

Superstructures and bent caps shall be designed as capacity protected elements and shall conform to the requirements of CSDC.

11.7.5.12 Structural Joints

Structural joints (e.g.: column/superstructure, column/bent cap, or column/footing) shall conform to the requirements of CSDC.

11.8 Passenger Stations and Building Structures

All Primary Type 1 passenger stations and building structures shall be subject to the seismic criteria for Bridges, Aerial Structures, and Grade Separations per Section 11.7.

RFP No.: 13-57 – Addendum No. 5 - 10/09/2014

All Primary Type 2 passenger stations and building structures shall be subject to both NCL/MCE and OPL/OBE seismic criteria herein.

All Secondary passenger stations and building structures owned by the Authority shall be subject to the NCL/MCE seismic criteria herein.

All Secondary passenger stations and building structures owned by Third Parties shall be subject to the applicable Third Party seismic criteria.

11.8.1 Design Codes

For NCL/MCE design of Primary Type 2 structures, ASCE 41 shall apply. Although ASCE 41 is a document originally issued for seismic rehabilitation of existing buildings, it is applicable in absence of a similar performance based code for the seismic design of new buildings. Certain criteria herein might exceed those of ASCE 41. If items are not specifically addressed in this or other chapters, ASCE 41 shall be used.

For OPL/OBE design of Primary Type 2 structures, current CBC force based design methods shall apply. Note that the OPL/OBE load combination, as given in the *Structures* chapter, is a strength load combination. No seismic response modification factors shall apply to the OBE demands.

For NCL/MCE design of Secondary structures owned by the Authority, current CBC seismic design shall apply, including applicable use of seismic response modification factors.

Table 11-5 summarizes the applicable seismic design code for each General Classification.

Table 11-5: Applicable Passenger Station and Building Structure Design Codes

Performance/ Design Earthquake	General Classification		
	Primary Type 1	**Primary Type 2**	**Secondary**
NCL/MCE	CBDM [1]	ASCE 41	CBC (Seismic Design)
OPL/OBE	AASHTO LRFD BDS with California Amendments [1]	CBC (Strength Design)	--
TSI/OBE	*Structures* chapter	--	--

Notes:
[1] as amended by Section 11.7

11.8.2 Seismic Design Approach

The seismic design approach differs depending upon the design earthquake.

RFP No.: 13-57 – Addendum No. 5 - 10/09/2014

11.8.2.1 NCL/MCE Design Approach

For Primary Type 2 passenger station and building structures, NCL/MCE design shall include the following:

- A "weak beam - strong column" design, plastic hinges shall form in the beams and not in the columns. Proper detailing shall be implemented to avoid any kind of nonlinearity or failure in the joints. The formation of a plastic hinge shall take place in the beam element at a distance not less than twice the beam depth away from the face of the joint by adequate detailing.
- The structure shall have a clearly defined mechanism for response to seismic loads with clearly defined load path and load carrying systems.
- Each component shall be shall be classified as deformation-controlled (ductile) or force-controlled (non-ductile). The station or building shall be provided with at least 1 continuous load path to transfer seismic forces, induced by ground motion in any direction, from the point of application to the final point of resistance. All components shall be capable of resisting deformation and force actions within the applicable criteria.
- Ductile detailing and proportioning requirements shall be satisfied. No brittle failures shall be allowed.

If energy dissipation, seismic response modification, or base isolation systems are used, then a design variance shall be submitted per the *General* chapter. In addition, the use of such systems shall be identified in the SDAP, as discussed in Section 11.3.

11.8.2.2 OPL/OBE Design Approach

For Primary Type 2 structures, for OPL/OBE design, the approach shall be:

- The station or building shall respond as essentially elastic.

11.8.3 Seismic Demands on Structural Components

11.8.3.1 Analysis Techniques – General

The station or building shall be modeled, analyzed, and evaluated as a three-dimensional assembly of elements and components. SSI shall be considered in the modeling and analysis.

Structures shall be analyzed using Linear Dynamic Procedure (LDP), Nonlinear Static Procedure (NSP), or Nonlinear Dynamic Procedure (NDP).

Unless it is shown that the conditions and requirements for LDP or NSP can be satisfied, all structures shall be analyzed using NDP.

11.8.3.2 Linear Dynamic Procedure

LDP shall be used in accordance with the requirements of ASCE 41. This can be either a response spectrum method or time-history method as applicable. Buildings shall be modeled

RFP No.: 13-57 – Addendum No. 5 - 10/09/2014

with linear elastic stiffness and equivalent viscous damping values consistent with the behavior of the components responding at or near yield level, as defined in ASCE 41.

When LDP response spectrum method is used, modal combination shall be performed using the CQC approach, while spatial combination shall be performed using the square root of the sum of the squares (SRSS) technique.

When LDP time history method is used, input ground motions shall be applied to a three-dimensional model of the structure. Where the relative orientation of the ground motions cannot be determined, the ground motion shall be applied in the direction that results in the maximum structural demands.

For buildings that have 1 or more of the following conditions, LDP shall not be used:

- In-Plane Discontinuity Irregularity, unless it is shown that the building remains linear elastic per requirements of Section 2.4.1.1.1 of ASCE 41
- Out-of-Plane Discontinuity Irregularity, unless it is shown that the building remains linear elastic per requirements of Section 2.4.1.1.2 of ASCE 41
- Weak Story Irregularity, unless it is shown that the building remains linear elastic per requirements of Section 2.4.1.1.3 of ASCE 41
- Torsional Strength Irregularity, unless it is shown that the building remains linear elastic per requirements of Section 2.4.1.1.4 of ASCE 41
- Building structures subject to potential foundation sliding, uplift and/or separation from supporting soil (near field soil nonlinearity)
- Building structures that include components with nonlinear behavior such as, but not limited to, buckling, expansion joint closure
- When energy dissipation, seismic response modification, or base isolation systems are used
- When the building site is at or in close proximity to hazardous faults, as defined in Section 11.5.2.1, or for ground motions with near-field pulse-type characteristics, a time history analysis shall be used.

After completion of each LDP, the Designer shall verify that structural members which are modeled as elastic do remain elastic and satisfy strength requirements.

11.8.3.3 Nonlinear Static Procedure

For NSP, a mathematical model directly incorporating the nonlinear load-deformation characteristics of individual components and elements of the building shall be developed and subjected to monotonically increasing lateral loads representing inertia forces in an earthquake until a target displacement is exceeded. Mathematical modeling and analysis procedures shall comply with the requirements of ASCE 41. The target displacement shall be calculated by the procedure described in ASCE 41. At least 2 types of lateral load pattern shall be considered as described in ASCE 41. The pushover analysis shall be performed in 2 principal directions

RFP No.: 13-57 – Addendum No. 5 - 10/09/2014

independently. Force-controlled actions shall be combined using SRSS, while deformation-controlled action shall be combined arithmetically. Due to soil properties, the embedded and underground building structures may have different behavior when they are pushed in opposite directions. In these cases the NSP shall include pushover analysis in 2 opposite directions (for a total of 4 analyses for 2 principal directions). When the response of the structure is not primarily in 1 of the principal directions, the pushover analysis shall consider non-orthogonal directions to develop a spatial envelope of capacity.

For buildings that have 1 or more of the following conditions, NSP shall not be used:

- For buildings that the effective modal mass participation factor in any 1 mode for each of its horizontal principal axes is not 70% or more
- If yielding of elements results in loss of regularity of the structure and significantly alters the dynamic response of the structure
- When ignoring the higher mode shapes has an important effect on the seismic response of the structure
- When the mode shapes significantly change as the elements yield
- When 1 of the structure's main response is torsion
- When energy dissipation, seismic response modification, or base isolation systems are used

After completion of each NSP, the Designer shall verify that structural members which are modeled as elastic do remain elastic and satisfy strength requirements.

11.8.3.4 Nonlinear Dynamic Procedure

For NDP, a mathematical model directly incorporating the nonlinear load deformation characteristics of individual components and elements of the building shall be subjected to earthquake shaking represented by ground motion time histories in accordance with these design criteria. Mathematical modeling and analysis procedures shall comply with the requirements of ASCE 41

When NDP is used, input ground motions shall be applied to a three-dimensional model of the structure. Where the relative orientation of the ground motions cannot be determined, the ground motion shall be applied in the direction that results in the maximum structural demands.

As a minimum, NDP shall comply with the following guidelines:

- Dead and required live loads shall be applied as an initial condition.
- In case of embedded building structures, hydrostatic pressure, hydrodynamic pressure, earth pressure, and buoyancy shall be applied along with dead and required live loads. Where these loads result in reducing other structural demands, such as uplift or

RFP No.: 13-57 – Addendum No. 5 - 10/09/2014

overturning, the analyses shall consider lower and upper bound values of these loads to compute reasonable bounding demands.

- For the deformation-controlled action members the deformations shall be compared with the strain limits for each performance level as specified in this document.
- For force-controlled action members the force demand shall be resisted by capacities calculated per ASCE 41, ACI, and AISC.

After completion of each NDP, the Designer shall verify that structural members which are modeled as elastic do remain elastic and satisfy strength requirements.

11.8.3.5 Local Detailed Finite Element Model

Local detailed finite element models shall be considered as tools to better understand and validate the behavior of the structure when it cannot be obtained from the global model.

11.8.3.6 Floor Diaphragm

Mathematical models of buildings with stiff or flexible diaphragms shall account for the effects of diaphragm flexibility by modeling the diaphragm as an element with in-plane stiffness consistent with the structural characteristics of the diaphragm system.

When there is interest in the response of equipment installed on the floor diaphragm, proper modeling of the floor shall be made to capture vertical vibration modes of the floor.

11.8.3.7 Building Separation

Buildings shall be separated from adjacent structures to prevent pounding per requirements specified in Section 2.6.10.1 of ASCE 41. Exempt conditions described in Section 2.6.10.2 of ASCE 41 shall not be permitted.

11.8.3.8 Material Properties for Demands

Concrete and steel material properties for demands shall be per Section 11.7.3.6. For other material types (e.g.: aluminum, masonry, wood, and others), properties for demands shall be per the CBC.

11.8.3.9 Effective Sectional Properties

Effective sectional properties shall be per Section 11.7.3.4.

11.8.3.10 Foundation Stiffness, Mass and Damping

Where applicable, foundation stiffness, mass and damping, including the effects of soil structure interaction, shall be considered for seismic analyses per the *Geotechnical* chapter.

Below grade structures shall be modeled as embedded structures to incorporate and simulate proper soil properties and distribution in the global model. The near field (secondary non-linear) and far field (primary non-linear) effects shall be incorporated in the model. The far field effect shall be modeled with equivalent linear elastic soil properties (stiffness, mass and damping), while the near field soil properties shall represent the yielding behavior of the soil

RFP No.: 13-57 – Addendum No. 5 - 10/09/2014

using classic plasticity rules. Input ground motions provided by the Authority shall be used as appropriate: the application of the motions to the global model shall be illustrated in the SDAP, as required in Section 11.3.

At-grade and above-grade buildings shall be connected to the near field soil with nonlinear properties when the soil behavior is expected to be subjected to high strains near the structure. Input ground motions, as supplied by the Authority, shall be applied to the ground nodes of the soil elements.

11.8.3.11 Boundary Conditions

In cases where the building is adjacent to or connected to other structures that are not included in the model, the model shall contain appropriate elements at its boundaries to capture mass and stiffness effects of the adjacent structures.

After completion of static or dynamic analysis, a check shall be performed to verify that the boundary conditions and element properties are consistent with initial modeling assumptions.

11.8.3.12 Multidirectional Seismic Effects

The ground motions shall be applied concurrently in 2 horizontal directions and vertical direction per ASCE 41. In the demand and capacity assessment of deformation-controlled actions, simultaneous orthogonality effects shall be considered.

11.8.3.13 Load and Load Combinations

Seismic loads and load combinations shall comply with the requirements of the *Structures* chapter. For embedded and underground buildings hydrostatic pressure, hydrodynamic pressure, earth pressure and buoyancy shall be included in addition to dead load and live load. Differential settlement shall be included for buildings.

11.8.3.14 Accidental Horizontal Torsion

In a three-dimensional analysis, the effect of accidental torsion shall be included in the model. Accidental torsion at a story shall be calculated as the seismic story force multiplied by 5% of the horizontal dimension at the given floor level measure perpendicular to the direction of applied load. Torsion needs not be considered in buildings with flexible diaphragms.

11.8.3.15 P-Δ Effects

Geometric nonlinearity or P-Δ effects shall be incorporated in the analysis.

11.8.3.16 Overturning

Structures shall be designed to resist overturning effects caused by seismic forces. Each vertical-force-resisting element receiving earthquake forces due to overturning shall be investigated for the cumulative effects of seismic forces applied at and above the level under consideration. The effects of overturning shall be evaluated at each level of the structure as specified in ASCE 41. The effects of overturning on foundations and geotechnical components shall be considered in the evaluation of foundation strength and stiffness as specified in ASCE 41.

RFP No.: 13-57 – Addendum No. 5 - 10/09/2014

11.8.3.17 Seismic Capacities of Structural Components

The component capacities shall be computed based on methods given in Chapters 5 and 6 of ASCE 41 for steel and concrete structures, respectively. However, strain limits described in Sections 11.7.4.5 and 11.7.4.8 of this document shall be used.

11.8.3.18 Material Properties for Capacities

Concrete and steel material properties for capacities shall be per Section 11.7.4.10. For other material types (e.g.: aluminum, masonry, wood, and others), properties for capacities shall be per the CBC.

11.8.3.19 Capacity of Members with Force-Controlled Action

Axial force, bending moment and shear capacities shall be computed in accordance with the requirement of ASCE 41.

11.8.3.20 Capacity Protected Element Design

For NCL/MCE design, pre-determined structural components may undergo flexural plastic hinging, and 120% over strength factors shall be applied to capacity protected members to protect against brittle failure mechanisms. All other structural components not pre-determined for flexural plastic hinging shall be designed to remain elastic under the MCE.

For OPL/OBE design, the structure shall respond as essentially elastic.

RFP No.: 13-57 – Addendum No. 5 - 10/09/2014

Chapter 12

Structures

RFP No.: 13-57 – Addendum No. 5 - 10/09/2014

Revision	Date	Description
0	13 Mar 12	Initial Release, R0
0.1	07 Dec 12	Addendum 7 – CP01
1	June 2013	Revision 1
2	Feb 2014	Revision 2

Table of Contents

12 STRUCTURES 12-1
12.1 Scope 12-1
12.2 Regulations, Codes, Standards, and Guidelines 12-1
12.3 Types of Structures 12-3
12.4 Structural Design Requirements 12-3
12.4.1 Structural Design Parameters 12-3
12.4.2 Seismic Design 12-4
12.5 Permanent and Transient Loads and Load Combinations for Primary Structures ... 12-4
12.5.1 Permanent Loads 12-4
12.5.2 Transient Loads 12-7
12.5.3 Miscellaneous Loads 12-26
12.5.4 Load Factors and Load Modifiers 12-31
12.6 Track-Structure Interaction 12-36
12.6.1 Track-Structure Interaction Design and Analysis Plan 12-37
12.6.2 Design Parameters 12-39
12.6.3 Frequency Analysis 12-40
12.6.4 Track Serviceability Analysis 12-43
12.6.5 Rail-Structure Interaction Analysis 12-53
12.6.6 Dynamic Structural Analysis 12-61
12.6.7 Dynamic Vehicle-Track-Structure Interaction Analysis 12-65
12.6.8 Modeling Requirements 12-68
12.7 Structural Design of Stations, Surface Facilities, Buildings and Ancillary Structures . 12-76
12.7.1 Load Requirements for Stations, Surface Facilities, Buildings, and Ancillary Structures .. 12-76
12.7.2 Foundations for Equipment Enclosures 12-83
12.7.3 Foundations for Utility Equipment 12-83
12.8 Design Considerations for Primary Type 1 Bridges, Aerial Structures, and Grade Separations 12-83
12.8.1 General Design Requirements 12-84
12.8.2 Design Loads and Effects 12-88
12.8.3 Foundations 12-88
12.8.4 Steel Structures 12-89
12.8.5 Concrete Structures 12-89
12.8.6 General Bridge, Aerial Structure, and Grade Separation Features 12-91
12.8.7 Complex and Non-Standard Structures 12-99
12.8.8 Emergency Access/Egress Points 12-99
12.8.9 OCS and Traction Power Facility Gantry Pole Supports 12-99
12.8.10 Maintenance of Primary Type 1 Bridges, Aerial Structures, and Grade Separations 12-100
12.9 Design Considerations for Primary Type 2 and Secondary Structures 12-101
12.9.1 Primary Type 2 Structures 12-101
12.9.2 Design Considerations for Secondary Structures 12-102
12.10 Design Considerations for Earth Retaining Structures 12-102
12.10.1 Retaining Walls 12-103

RFP No.: 13-57 – Addendum No. 5 - 10/09/2014

12.10.2 MSE Walls 12-103
12.10.3 Trenches 12-103
12.10.4 Earth Retaining Structure Intrusion Protection 12-103
12.10.5 Struts 12-104
12.10.6 Trench Drainage 12-104
12.10.7 Trench Emergency Access/Egress Points 12-104
12.11 Cut-and-Cover Structures 12-104
12.11.1 Structural System 12-104
12.11.2 Loads and Forces 12-105
12.11.3 Waterproofing of Underground Station Structures 12-111
12.11.4 Water Holding and Conveyance Structures 12-113
12.11.5 Shoring Support Systems 12-113
12.11.6 Structural Fire Resistance 12-114
12.12 Support and Underpinning of Structures 12-114
12.12.1 Depth of Support Structures 12-114
12.12.2 Methods 12-115
12.13 Areas of Potential Explosion 12-116
12.14 Structure Interface Issues 12-116
12.14.1 Cable Trough 12-116
12.14.2 Grounding and Bonding 12-116
12.14.3 Drainage 12-116
12.14.4 Conduit Risers 12-117
12.14.5 Embedded Conduits 12-117
12.14.6 Trackside Equipment 12-117
12.14.7 Emergency Access/Egress Stairs 12-117
12.14.8 Concrete Anchors 12-117
12.14.9 Utilities 12-117
12.14.10 Field-drilled Anchors for OCS Pole and OCS Support Structures 12-118

Tables

Table 12-1: Unit Weight of Common Materials 12-5
Table 12-2: Loads and Load Combinations for Design of Overhead Contact System Pole Foundations 12-27
Table 12-3: Loads and Load Combinations for Design of Traction Power Facility Gantry Pole Supports on Aerial Structures 12-28
Table 12-4: Load Combinations for Design of Structures 12-33
Table 12-5: Loading Definitions Used in Table 12-4 12-34
Table 12-6: Load Factors for Permanent Loads, γ_P 12-35
Table 12-7: Load Factors for Permanent Loads due to Superimposed Deformations, γ_P 12-35
Table 12-8: Track-Structure Interaction Analysis Goals 12-37
Table 12-9: Vertical Deflection Limits: Group 1a 12-45
Table 12-10: Vertical Deflection Limits: Group 1b 12-45
Table 12-11: Transverse Deflection Limits 12-46
Table 12-12: Rotation about Transverse Axis and Relative Displacement at the Level of the Rail Limits 12-48

RFP No.: 13-57 – Addendum No. 5 - 10/09/2014

Table 12-13: Rotation about Vertical Axis and Relative Displacement at Outermost Rail Limits 12-51
Table 12-14: Relative Vertical Displacement at Expansion Joints Limits – Track Serviceability 12-52
Table 12-15: Relative Transverse Displacement at Expansion Joints Limits – Track Serviceability 12-53
Table 12-16: Deck Twist Limits 12-53
Table 12-17: Relative Longitudinal Displacement at Expansion Joints Limits 12-58
Table 12-18: Relative Vertical Displacement at Expansion Joints Limits 12-59
Table 12-19: Relative Transverse Displacement at Expansion Joints Limits 12-60
Table 12-20: Minimum Factor of Safety for Uplift on Direct Fixation Fasteners 12-61
Table 12-21: Axial Rail Stress Limits 12-61
Table 12-22: Dynamic Track Safety Limits 12-67
Table 12-23: Damping Values for Dynamic Model 12-70
Table 12-24: Rail Section Properties for RSI Analysis 12-71
Table 12-25: Minimum Recommended Track Extension and Boundary Spring Properties .. 12-75
Table 12-26: Joint Location Limitations at Low-Speed Turnouts 12-95
Table 12-27: Joint Location Limitations at High-Speed Turnouts 12-96

Figures

Figure 12-1: Cooper E-50 Loading (LLRR) 12-8
Figure 12-2: Equivalent Loads q_{1k} for Simple Vertical Surfaces Parallel to the Track for Speeds Less than 125 mph 12-15
Figure 12-3: Equivalent Loads q_{1k} for Simple Vertical Surfaces Parallel to Track for Speeds Greater than 125 mph 12-16
Figure 12-4: Equivalent Loads q_{2k} for Simple Horizontal Surfaces Above Track for Speeds Less than 125 mph 12-17
Figure 12-5: Equivalent Loads q_{2k} for Simple Horizontal Surfaces Above Track for Speeds Greater than 125 mph 12-18
Figure 12-6: Equivalent Loads q_{3k} for Simple Horizontal Surfaces Adjacent to Track 12-19
Figure 12-7: Definition of the Distances min a_g and max a_g from Centerline of Track 12-20
Figure 12-8: Derailment Case I 12-23
Figure 12-9: Derailment Case II 12-24
Figure 12-10: LLRM Loading 12-39
Figure 12-11: Recommended Lower Bound Threshold of Vertical Frequency 12-42
Figure 12-12: Transverse Span Deformation Limits 12-46
Figure 12-13: Rotation about Transverse Axis at Deck Ends 12-48
Figure 12-14: Rotation about Vertical Axis at Deck Ends – Global View 12-50
Figure 12-15: Rotation about Vertical Axis at Deck Ends – Local View 12-50
Figure 12-16: Relative Vertical Displacement at Expansion Joints – Track Serviceability . 12-51
Figure 12-17: Relative Transverse Displacement at Expansion Joints – Track Serviceability 12-52

RFP No.: 13-57 – Addendum No. 5 - 10/09/2014

Figure 12-18: Deck Twist Diagram 12-53
Figure 12-19: δ_{LF} Definition 12-56
Figure 12-20: δ_{LLRM+I} Definition 12-56
Figure 12-21: δ_{OBE} Definition 12-57
Figure 12-22: Structural Thermal Unit (L_{TU}) Definition..... 12-58
Figure 12-23: Relative Vertical Displacement at Expansion Joints 12-59
Figure 12-24: Relative Transverse Displacement at Expansion Joints..... 12-60
Figure 12-25: Type 1 12-62
Figure 12-26: Type 2 12-62
Figure 12-27: Type 3 12-63
Figure 12-28: Type 4 12-63
Figure 12-29: Type 5 12-63
Figure 12-30: Characteristic Wheel Spacing, d 12-64
Figure 12-31: Rail-Structure Interaction Model..... 12-70
Figure 12-32: Non-Ballasted Track with Direct Fixation Fasteners: Bi-linear Coupling Springs 12-72
Figure 12-33: Ballasted Track with Concrete Ties and Elastic Fasteners: Bi-linear Coupling Springs 12-72
Figure 12-34: Collision Loads for Each Group of Columns 12-80
Figure 12-35: Protection Device 12-80
Figure 12-36: Joint Location Limitations at Low-Speed Turnouts..... 12-94
Figure 12-37: Joint Location Limitations at High-Speed Turnouts..... 12-95

RFP No.: 13-57 – Addendum No. 5 - 10/09/2014

Acronyms

AASHTO	American Association of State Highway and Transportation Officials
ASCE	American Society of Civil Engineers
Authority	California High-Speed Rail Authority
Caltrans	California Department of Transportation
CBC	California Building Code
CSDC	Caltrans Seismic Design Criteria
CWR	Continuous Welded Rail
HST	High-Speed Train
LRFD	Load and Resistance Factor Design
MCE	Maximum Considered Earthquake
NSFC	Non-Standard Fastener Configuration
NUFC	Non-Uniform Fastener Configuration
OBE	Operating Basis Earthquake
OCS	Overhead Contact System
REJ	Rail Expansion Joints
RLD	Relative Longitudinal Displacement
RSI	Rail-Structure Interaction
RSIDAP	Rail-Structure Interaction Design and Analysis Plan
RVD	Relative Vertical Displacement
SDAP	Seismic Design and Analysis Plan
SEJ	Structural Expansion Joints
TCL	Track Centerline
TOR	Top of Rail
TSI	Track-Structure Interaction
TSIDAP	Track-Structure Interaction Design and Analysis Plan
VTSI	Vehicle-Track-Structure Interaction
VTSIDAP	Vehicle-Track-Structure Interaction Design and Analysis Plan

Note: Additional Acronyms are found in Section 12.2 and Table 12-5 of this chapter.

RFP No.: 13-57 – Addendum No. 5 - 10/09/2014

12 Structures

12.1 Scope

This chapter provides design criteria for structures supporting California High-Speed Train (HST) service including but not limited to bridges, aerial structures, grade separations, earth retaining structures, cut-and-cover underground structures, station structures, surface facilities and buildings.

12.2 Regulations, Codes, Standards, and Guidelines

Refer to the *General* chapter for requirements pertaining to regulations, codes, and standards. Design shall meet applicable portions of the general laws and regulations of the State of California and of respective local authorities.

The provisions within this chapter shall govern structural design. The following current documents are either referenced by this chapter, or shall be considered as guidelines when sufficient criteria are not provided by this chapter.

American Concrete Institute (ACI)

- ACI 318: Building Code Requirements for Structural Concrete
- ACI 350: Code Requirements for Environmental Engineering Concrete Structures and Commentary

- American Welding Society (AWS)
  - AWS D1.1/D1.1M: Structural Welding Code-Steel
  - AWS D1.8/D1.8M: Structural Welding Code-Seismic Supplement
- American Association of State Highway and Transportation Officials (AASHTO)
  - AASHTO/AWS D1.5M/D1.5: Bridge Welding Code
  - AASHTO Guide Specifications for LRFD Seismic Bridge Design
  - AASHTO Guide Specifications for Seismic Isolation Design
  - AASHTO LRFD Bridge Construction Specifications
  - AASHTO LRFD Guide Specifications for the Design of Pedestrian Bridges
- California Building Code (CBC)

RFP No.: 13-57 – Addendum No. 5 - 10/09/2014

- American Railway Engineering and Maintenance-of-Way Association (AREMA)
  - Manual for Railway Engineering
- American Society of Civil Engineers (ASCE)
  - ASCE 7: Minimum Design Loads for Buildings and Other Structures
  - ASCE 41: Seismic Rehabilitation of Existing Buildings
- American Institute of Steel Construction (AISC)
  - Steel Construction Manual
  - Seismic Design Manual
- California Occupational Safety and Health Administration (Cal/OSHA) Department of Industrial Relations
- California Department of Transportation (Caltrans) Bridge Design Manuals (CBDM)
  - Caltrans Bridge Design Specification – AASHTO LRFD Bridge Design Specifications and California Amendments (to the AASHTO LRFD Bridge Design Specifications), hereafter referred to as "AASHTO LRFD BDS with California Amendments"
  - Caltrans Bridge Memo to Designers Manual (CMTD)
  - Caltrans Bridge Design Practices Manual (CBDP)
  - Caltrans Bridge Design Aids Manual (CBDA)
  - Caltrans Bridge Design Details Manual (CBDD)
  - Caltrans Seismic Design Criteria (CSDC)
  - Office of Special Funded Projects (OSFP) Information and Procedures Guide
- Code of Federal Regulations (CFR)
- United States Department of Transportation Federal Highway Administration; Technical Manual for Design and Construction of Road Tunnels – Civil Elements; Publication No. FHWA-NHI-09-010

Other international standards are used in the development of these criteria, including the following:

- European Standard EN 1991-2:2003 Actions on Structures – Part 2: Traffic Loads on Bridges
- European Standard EN 1990:2002 +A1 Basis of Structural Design annex A2: Application to Bridges
- International Federation for Structural Concrete (FIB) Model Code for Concrete Structures, 1990 (For Time Dependent Behavior of Concrete)

RFP No.: 13-57 – Addendum No. 5 - 10/09/2014

12.3 Types of Structures

Elements of HST infrastructure, based on their importance to HST, shall be generally classified as Primary Type 1, Primary Type 2, or Secondary. For the definitions of these general classifications, refer to the *Seismic* chapter.

Some examples of structures supporting HST service are:

- Bridges – HST trackway structures crossing rivers, lakes, or other bodies of water
- Aerial Structures – elevated HST trackway structures including bridges, viaducts and HST grade separations
- Grade Separations – structures separating trackways from railroad, highway, or pedestrian usage
- Earth Retaining Structures – including U-walls, trenches, and retaining walls
- Cut-and-Cover Underground structures – including cut-and-cover line structures
- Bored Tunnels
- Mined Tunnels
- Stations, Surface Facilities, Buildings and Ancillary Structures – including station buildings, station parking structures, sound walls, fences, gates and miscellaneous structures
- Underground Ventilation Structures
- Underground Passenger Stations
- Equipment and Equipment Supports

12.4 Structural Design Requirements

Structures shall be designed for specified limit states to achieve the objectives of constructability, safety, and serviceability, with due consideration to inspectability and maintainability, as specified in AASHTO LRFD BDS with California Amendments unless otherwise modified in this chapter.

12.4.1 Structural Design Parameters

- Structures shall be designed for the appropriate loadings and shall comply with the HST structure gauge per the *Trackway Clearances* chapter.
- The design life for structures shall be as defined in the *General* chapter. For elements such as expansion joints and bearings that will need to be replaced during the life of the structures, specific replacement procedures shall be developed that will show how the element can be replaced within the non-operation hours of the HST service.

RFP No.: 13-57 – Addendum No. 5 - 10/09/2014

- Requirements for noise and vibration suppression are defined in the environmental documents including materials and specific locations and measurements.
- Permanent and temporary structures including falsework shall be designed in accordance with clearance requirements defined in the *Trackway Clearances* chapter. Falsework clearance requirements are only applicable when falsework is erected over an operational road or railway.
- Design of structures shall consider loads and effects due to erection equipment, construction methods, and sequence of construction.
- Design and construction of HST facilities shall comply with the approved and permitted environmental documents.
- Only non-flammable materials are allowed for permanent structural elements supporting HST operations. Timber is allowed in construction of temporary falsework.

12.4.2 Seismic Design

For seismic design criteria for Primary Type 1, Primary Type 2, and Secondary structures, refer to the *Seismic* chapter.

12.5 Permanent and Transient Loads and Load Combinations for Primary Structures

This section specifies the permanent and transient loads, load factors and load combinations for Primary Type 1 structures including bridges, aerial structures, grade separations and earth retaining structures. Where applicable, this section shall apply for Primary Type 2 structures.

Facility loads for stations, surface facilities, buildings and ancillary structures are specified in Section 12.7.

Loads and forces for cut-and-cover structures are specified in Section 12.11.

For structures carrying highway loads, AASHTO LRFD BDS with California Amendments shall apply with supplementary provisions herein.

12.5.1 Permanent Loads

12.5.1.1 Dead Load (DC, DW)

The dead load shall include the weight of structure components, appurtenances, utilities attached to the structure, earth cover, finishes, and permanent installations such as tracks, ballast, conduits, piping, safety walkways, walls, sound walls, electrification and utility services.

RFP No.: 13-57 – Addendum No. 5 - 10/09/2014

In the absence of more precise information, the unit weights specified in Table 12-1 shall be used for dead loads.

DC refers to the dead load of structural components and permanent attachments supported by the structure including tracks, cable troughs, parapet walls, sound walls, overhead contact system (OCS), etc.

DW refers to the dead load of non-structural attachments that are permanent or non-permanent attachments including utilities, ballast, plinths, cables, finishes, etc.

If applicable, dead load shall be applied in stages to represent the sequence required to construct the structure. Analysis shall consider the effect of the maximum and minimum loading imposed on the structure during construction or resulting from placement or removal of earth cover.

Table 12-1: Unit Weight of Common Materials

Item	Unit Weight	Reference
Electrification (OCS and fastenings)	100 pounds per foot of track	CHSTP (Refer to note 2)
OCS poles and support	Refer to Section 12.5.3.1	CHSTP
Cable trough including walkway surface without OCS pole	1400 pounds per foot each	CHSTP
Ballast	140 pcf	AASHTO LRFD BDS with California Amendments
Ballasted track not including rail and fastener systems	4200 pounds per foot per track, including ties, (add 1000 pounds per foot per track in superelevated zones)	CHSTP
Parapet wall	800 pounds per foot each side	CHSTP
Rails and fasteners (no ties) including special trackwork	200 pounds per foot of track	AREMA
Non-ballasted track and non-ballasted track base not including rail and fastener systems	2500 pounds per foot per track, (add 1000 pounds per foot per track in superelevated zones)	CHSTP
Soils	See Geotechnical reports described in the *Geotechnical* chapter	—
Sound wall (clear, 1 inch thick)	125 pounds per foot for 14-foot height from TOR	CHSTP
Systems cables in trough	200 pounds per foot of track	CHSTP

Notes:

1. For materials not listed, refer to AASHTO LRFD BDS with California Amendments or CBC as applicable.
2. CHSTP refers to the weights of internal systems requirements necessary for HST operations.

RFP No.: 13-57 – Addendum No. 5 - 10/09/2014

12.5.1.2 Downdrag Force (DD)

Possible development of downdrag on piles or shafts shall be considered. Recommended negative skin friction values shall be as provided for the particular site in the geotechnical reports described in the *Geotechnical* chapter, or as a minimum refer to AASHTO LRFD BDS with California Amendments Article 3.11.8.

12.5.1.3 Earth Pressure (EV, EH)

Substructure elements shall be proportioned to withstand earth pressure. Recommended soil parameters, vertical and lateral earth pressure loads, and surcharge loads shall be as provided for the particular site in the geotechnical reports described in the *Geotechnical* chapter.

A. Vertical Earth Pressure (EV)

Depth of cover shall be measured from the ground surface or roadway crown, or from the street grade, whichever is higher, to the top of the underground structure. Saturated densities of soils shall be used to determine the vertical earth pressure. For recommended values, refer to the *Geotechnical* chapter.

B. Lateral Static Earth Pressure (EH)

For lateral static earth pressures, refer to the *Geotechnical* chapter.

12.5.1.4 Earth Surcharge (ES)

Surcharge loads (ES) are vertical or lateral loads resulting from loads applied at or below the adjacent ground surface. For procedures for determining surcharge loads, refer to the *Geotechnical* chapter.

12.5.1.5 Earth Settlement Effects (SE)

Earth settlement effects (SE) are forces or displacements imposed on a structure due to either uniform or differential settlement under sustained loading. For settlement calculation, refer to the geotechnical reports described in the *Geotechnical* chapter.

Structures shall be designed to accommodate earth settlement effects. Uniform and differential foundation settlements shall be subject to the allowable limits as given in the *Geotechnical* chapter. Refer to Section 12.8.6.18 for additional requirements.

At and near water crossings, scour potential shall also be considered for earth settlement effects.

12.5.1.6 Creep Effects (CR)

For the effects due to creep of concrete (CR), the requirements in AASHTO LRFD BDS with California Amendments Article 5 shall be used.

Rail-structure interaction forces due to the constraint of structural movement to creep effects shall be considered as specified in Section 12.5.3.4.

RFP No.: 13-57 – Addendum No. 5 - 10/09/2014

12.5.1.7 Shrinkage Effects (SH)

For the effects due to shrinkage of concrete (SH), the requirements in AASHTO LRFD BDS with California Amendments Article 5 shall be used.

Rail-structure interaction forces due to the constraint of structural movement to shrinkage effects shall be considered as specified in Section 12.5.3.4.

12.5.1.8 Secondary Forces from Prestressing (PS)

Secondary forces from prestressing (PS) effects shall be accounted for in design. Such secondary forces arise during prestress of statically indeterminate structures, which produce additional internal forces and support reactions.

Rail-structure interaction forces due to the constraint of structural movement due to secondary forces from prestressing shall be considered as specified in Section 12.5.3.4.

12.5.1.9 Locked-in Construction Forces (EL)

Locked-in construction force effects (EL) resulting from the construction process shall be considered. Such effects include, but are not limited to, jacking apart adjacent cantilevers during segmental construction.

12.5.1.10 Water Loads (WA)

The effects of ground or surface water hydrostatic force, including static pressure of water, buoyancy, stream pressure, and wave loads (WA) shall be considered using the requirements in AASHTO LRFD BDS with California Amendments Article 3.7. Recommended values given in the geotechnical reports described in the *Geotechnical* chapter shall be used.

Adequate resistance to flotation shall be provided to resist uplift on structure foundations based upon larger of either the maximum probable height of the water table defined in the geotechnical reports described in the *Geotechnical* chapter, or the maximum flood condition described in the hydrology report. For the completed structure, uplift resistance shall consist of the dead load of the completed structure and applicable permanent loads.

Hydrostatic pressure shall be applied normal to surfaces in contact with groundwater with a magnitude based on the maximum probable height of water table and the applicable water density.

The change in foundation condition due to scour shall be investigated per AASHTO LRFD BDS with California Amendments Article 3.7.5.

12.5.2 Transient Loads

12.5.2.1 Live Loads (LLP, LLV, LLRR, LLH, LLS)

Live loads are due to high-speed trains, other trains such as freight, Amtrak, passenger rail, and shared-use rail trains, highway loads, construction equipment, and pedestrians.

RFP No.: 13-57 – Addendum No. 5 - 10/09/2014

A. Floor, Roof, and Pedestrian Live Loads (LLP)

For the force effects due to floor and roof live loads (LLP), refer to Section 12.7. Section 12.7 includes provisions for aerial trackways supporting service walkways.

B. High-Speed Train Live Loads (LLV)

The project specific rolling stock has not yet been determined. Once the project specific rolling stock is determined, LLV criteria will be updated. In the interim, the representative trainsets shown in Section 12.6.6.1 shall be used as LLV.

C. Shared-Use Track Train Live Loads (LLRR)

Structures that will support shared service with another railroad system such as Amtrak, Caltrain, Metrolink, UPRR, BNSF, etc., have specific criteria that must be followed in addition to the requirements provided herein for high-speed trains.

Amtrak loading is described in Section 12.5.2.1-E. Additionally, design shall meet the requirements described in the *Seismic* chapter and Section 12.6.

D. Maintenance and Construction Train Live Loads: Cooper E-50 Loading (LLRR)

Structures shall be designed to support maintenance and construction trains, vertical loads are defined as the Cooper E-50 in the AREMA Specification, refer to Figure 12-1.

Figure 12-1: Cooper E-50 Loading (LLRR)

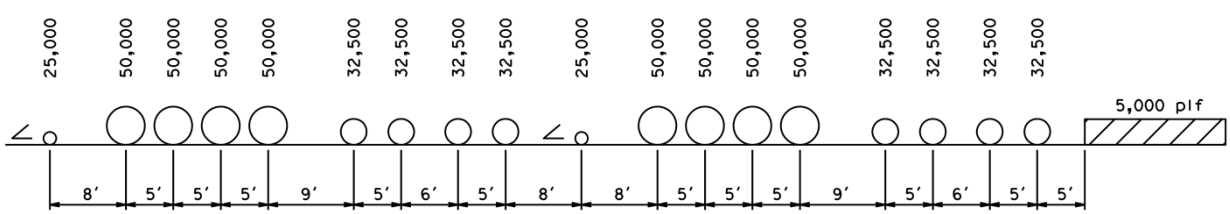

For the case of multiple tracks on the bridge, LLRR shall be as follows:

- For 2 tracks, full live load on 2 tracks.
- For 3 tracks, full live load on 2 tracks and 1/2 on the other track.
- For 4 tracks, full live load on 2 tracks, 1/2 on one track, and 1/4 on the remaining 1.
- For more than 4 tracks, to be considered on an individual basis.

The tracks selected for loading shall be those tracks that will produce the most critical design condition on the member under consideration.

E. Amtrak Live Loads

Designated segments of the HST alignment are required to be designed to provide for Amtrak service. These segments shall be designed to support Cooper E-50 loads as described in the AREMA Manual. These structure segments shall also be designed to meet the requirements for

RFP No.: 13-57 – Addendum No. 5 - 10/09/2014

structures supporting HSTs, including Section 12.6, and requirements described in the *Seismic* chapter.

These structures shall be designed to resist 2 axles weighing 75 kips each with a longitudinal spacing of 9.0 feet. This additional loading is required to account for local effects of Amtrak locomotives.

F. Highway Live Loads (LLH)

Facilities required to support highway loads over HST shall be designed to the requirements of AASHTO LRFD BDS with California Amendments Article 3.6.1. For facilities intended to support highway permit loads, Caltrans guidelines shall be followed for the routing and sizes of the permit vehicles.

G. Live Load Surcharge (LLS)

Live load surcharge (LLS) shall be applied at the ground surface both over and adjacent to underground structures, as applicable, to account for presence of surface live load. Live load surcharge shall consider the presence of LLRR, LLV, LLH, possible future roadways, sidewalk live loads, and construction live loads.

Methods for lateral distribution of live load surcharge due to rail loading shall be in accordance with AREMA. Lateral distribution of highway surcharge shall be in accordance with AASHTO LRFD BDS with California Amendments Article 3.11.6.4.

No impact factors apply to LLS for walls.

Recommended coefficients for lateral surcharge loading shall be as recommended in the geotechnical reports described in the *Geotechnical* chapter.

H. Live Loading for Fatigue Assessment

For structures carrying high-speed trains, the project specific rolling stock (LLV) plus dynamic impact (I) shall be used for fatigue assessment of structures.

Refer to Section 12.5.2.1B for LLV loading, and Section 12.6.6.3 for determination of dynamic impact (I). The methods of AASHTO LRFD BDS with California Amendments Article 3.6.1.4 shall be used to evaluate fatigue loads.

The fatigue assessment shall be performed for structural elements that are subjected to fluctuations of stress. For structures supporting multiple tracks the loading shall be applied to a minimum of 2 tracks in the most unfavorable positions. The fatigue damage shall be assessed over the required structural life of the structure. For fatigue assessment of structures, use 2.8 million axle loads per track per year.

12.5.2.2 Vertical Impact Effect (I)

Moving trains and vehicles impart dynamic loads to bridges, which are considered through a dynamic impact factor. The static effects of the design train and vehicle loads, other than

RFP No.: 13-57 – Addendum No. 5 - 10/09/2014

centrifugal, traction, braking, nosing and hunting shall be increased by the percentages specified herein.

Vertical impact effect (I) applies to the following:

- Superstructure, including steel or concrete supporting columns, steel towers, legs of rigid frames, and generally those portions of the structure that extend down to the main foundation
- The portion above the ground line of concrete or steel piles that support the superstructure directly
- Buried components where the depth of fill is less than 8 feet

Vertical impact effect (I) does not apply to the following:

- Retaining walls, wall-type piers, and piles except those described above
- Floor, roof, and pedestrian live loads (LLP)

<u>Vertical Impact Effect (I) for LLV</u>

Dynamic analysis is required for structures carrying HSTs (LLV) in order to determine impact effects. Refer to Section 12.5.2.1B for LLV loading, and Section 12.6.6.3 for determination of dynamic impact (I).

For determining impact factors (I) associated with maintenance and construction train loading (LLRR) on ballasted track, AREMA Specifications shall be used as follows:

Ballasted track:

- Reinforced or prestressed concrete bridges:

$$I = 60\% \qquad \text{where } L \le 14 \text{ feet}$$

$$I = \frac{225}{\sqrt{L}} \qquad \text{where } 14 \text{ feet} < L \le 127 \text{ feet}$$

$$I = 20\% \qquad \text{where } L > 127 \text{ feet}$$

- Steel bridges:

$$I = 40 - \frac{3L^2}{1600} \qquad \text{where } L < 80 \text{ feet}$$

$$I = 16 + \frac{600}{L - 30} \qquad \text{where } L \ge 80 \text{ feet}$$

L = span length

RFP No.: 13-57 – Addendum No. 5 - 10/09/2014

For determining impact factors (I) associated with maintenance and construction train loading (LLRR) for direct fixation on concrete non-ballasted track with spans less than and equal to 40 feet, European Standard EN 1991-2 shall be used as modified below. For spans longer than 40 feet, AREMA ballasted track impact factors shall be used.

Direct fixation on concrete non-ballasted track:

$$I = 100\left(\frac{2.16}{\sqrt{0.305L} - 0.2} - 0.27\right) \leq 100\% \text{ where } L \leq 40 \text{ feet}$$

L = Span length for member under consideration (main girder, bridge deck, etc.)

The calculated value shall be applied at top of rail (TOR) as a percentage of live load.

An additional ±20 percent imbalance of live load shall be applied to each rail as a vertical force to model the couple caused by potential rocking of the train. The couple shall be applied on each track in the direction that will produce the most unfavorable effect in the member under consideration.

<u>Vertical Impact Effect (I) for LLH</u>

For determining impact factors (I) associated with highway loading (LLH), dynamic load allowance, IM as defined in AASHTO LRFD BDS with California Amendments shall be used.

<u>Vertical Impact Effect on Buried Components</u>

A reduction of impact for buried components shall be applicable as specified in AASHTO LRFD BDS with California Amendments Article 3.6.2, with the 33 percent base impact value modified as applicable to LLRR or LLV, as given herein.

12.5.2.3 Centrifugal Force (CF)

For tracks on a curve, centrifugal force (CF) shall be considered as a horizontal load applied toward the outside of the curve. Multiple presence factors specified in Section 12.5.2.1D shall apply to centrifugal forces. Refer to the *Track Geometry* chapter for the range of radius values.

For centrifugal forces from carrying vehicular traffic, refer to AASHTO LRFD BDS with California Amendments.

The centrifugal force (CF) is a function of the train live load (LLRR or LLV), speed, and horizontal radius of curvature:

$$CF = (LLRR \text{ or } LLV) \times [0.0668 * V^2 * f / R]$$

CF acts at 6 feet above TOR

RFP No.: 13-57 – Addendum No. 5 - 10/09/2014

Where:

V = train speed (mph)

R = horizontal radius of curvature (feet)

f = reduction factor, not to be taken less than 0.35:

f = 1, for LLRR, for V≤ 75 mph

$f = 1 - [(V - 75)/621.4] \times [506/V + 1.75] \times [1 - (9.45/ L)^{1/2}] \geq 0.35$, for LLRR, V > 75 mph

f = 1, for LLV, all speeds

L = length in feet of the loaded portion of curved track on the bridge, for the specific structural element under consideration.

If the maximum line speed at the site is in excess of 75 mph, the centrifugal force for LLRR shall be determined as the maximum calculated under the following conditions:

- At 75 mph with a reduction factor of f = 1.0
- At the maximum line speed with a reduction factor calculated such that f < 1.0

The effect of superelevation shall be considered when present. The superelevation effect shifts the centroid of the train laterally producing an unequal transverse distribution between rails. Consideration shall be given to both a moving train condition, and an at rest train condition.

12.5.2.4 Traction and Braking Forces (LF)

A. LLRR

Traction and braking forces (LF) for passenger trains, freight trains, maintenance and construction trains (LLRR) are from AREMA Section 2.2.3:

Traction force = $N(25\sqrt{L})$ kips, acting 3 feet above TOR

Braking force = N(45 + 1.2L) kips, acting 8 feet above TOR

Where:

L = length in feet of portion of bridge under consideration

N = ratio of Cooper train load to Cooper E80 loading for the sizes of trains that will use the structure (i.e., for Cooper E50, N = 0.625)

The LF loads for LLRR are to be distributed over the length of portion of bridge under consideration up to the maximum length of train. Multiple presence factors specified in Section 12.5.2.1D shall apply.

RFP No.: 13-57 – Addendum No. 5 - 10/09/2014

B. LLV

For traction and braking forces (LF) from high-speed trains (LLV) taken from European Standard Eurocode EN 1991-2, Article 6.5.3:

Traction force = 2.26 kips per linear foot or 25 percent of train load (if known), with a maximum value of 225 kips, acting at TOR

Braking force = 1.37 kips per linear foot or 25 percent of train load (if known), with a maximum value of 1350 kips, acting at TOR

Multiple presence factors specified in Section 12.5.2.1D shall apply. Traction and braking forces will be reviewed and confirmed when the project specific rolling stock is selected.

C. LLH

For braking forces (LF) from highway loading (LLH), AASHTO LRFD BDS with California Amendments Article 3.6.4 shall be used.

12.5.2.5 Nosing and Hunting Effects (NE)

Lateral forces, also called nosing and hunting effects (NE) of the wheels contacting the rails, shall be accounted by a 22 kip horizontal force applied to the top of rail, perpendicular to the track centerline (TCL) at the most unfavorable position.

For load combinations with LLRR and LLV loadings, NE shall be applied simultaneously with centrifugal force (CF).

12.5.2.6 Wind Loads (WS, WL)

Wind Load on Structures (WS) and Wind Load on Trains (WL) shall be calculated in accordance with requirements in AASHTO LRFD BDS with California Amendments Article 3.8 with the following modifications:

- The effective wind area shall include the exposed area of all bridge elements, OCS poles, and catenary. For parapets and barriers, shielding of downwind elements from those upwind shall not be considered (i.e., the exposed area shall include the summation of parapets on the bridge).
- The base lateral load for Wind Load on Vehicles (WL) shall be revised to 0.3 klf perpendicular to the train acting 8 feet above the TOR. Refer to AASHTO LRFD BDS with California Amendments Table 3.8.1.3-1: Wind Components on Live Load for skewed angles of incidence shall be revised proportionally to reflect the modified base lateral load.
- For structures that utilize sound walls or wind walls capable of effectively shielding the train from wind loading, consideration may be given to a reduction of WL. The reduction may be taken as the fractional height of train that is shielded by the wall. This reduction shall not exceed 50 percent of WL.

RFP No.: 13-57 – Addendum No. 5 - 10/09/2014

Local design elements such as parapets or components on structures shall be designed to wind loading and slipstream effects. Wind loading shall be calculated per CBC. The wind importance factor shall equal 1.15.

Wind loading for non-conventional bridge types or long-spans will require special attention (e.g., dynamic effects).

Wind loads (WS) on building and station structures are detailed in Section 12.7 – Structural Design of Surface Facilities and Buildings.

Wind loads (WS, WL) on highway structures shall be per AASHTO LRFD BDS with California Amendments.

12.5.2.7 Slipstream Effects (SS)

A. Aerodynamic Actions from Passing Trains

The passing of high-speed trains subjects structures situated near the track to transient pressure waves. This action may be approximated by equivalent loads acting at the front and rear of the train.

Aerodynamic actions from passing trains shall be taken into account when designing structures adjacent to railway tracks.

The passing of rail traffic subjects any structure situated near the track to a traveling wave of alternating pressure and suction (refer to Figures 12-2 to 12-7). The magnitude of the action depends mainly on the following:

- Square of the speed of the train
- Aerodynamic shape of the train
- Shape of the structure
- Position of the structure, particularly the clearance between the vehicle and the structure

The actions may be approximated by equivalent loads at the ends of a train when checking strength and service limit states and fatigue. Equivalent loads are given in Sections 12.5.2.7-B to 12.5.2.7-G.

In Sections 12.5.2.7-B to 12.5.2.7-G, the Maximum Design Speed V [mph] shall be taken as the Maximum Line Speed at the site.

For aerodynamic actions inside of tunnels, refer to the *Tunnels* chapter.

At the start and end of structures adjacent to the tracks, for a length of 16.4 feet from the start and end of the structure measured parallel to the tracks, the equivalent loads in Sections 12.5.2.7-B to 12.5.2.7-G shall be multiplied by a dynamic amplification factor of 2.0.

RFP No.: 13-57 – Addendum No. 5 - 10/09/2014

Note that for dynamically sensitive structures, the dynamic amplification factor may be insufficient and may need to be determined by a special study. The study shall take into account dynamic characteristics of the structure including support and end conditions, speed of the adjacent rail traffic and associated aerodynamic actions, and the dynamic response of the structure including the speed of a deflection wave induced in the structure. In addition, for dynamically sensitive structures a dynamic amplification factor may be necessary for parts of the structure between the start and end of the structure.

Simple is defined hereafter as smooth, without projections, ribs, or other obstruction.

B. Simple Vertical Surfaces Parallel to the Track

For simple vertical surfaces parallel to the track, equivalent loads, ± q_{1k}, shall apply as given in Figure 12-2 and Figure 12-3.

Figure 12-2: Equivalent Loads q_{1k} for Simple Vertical Surfaces Parallel to the Track for Speeds Less than 125 mph

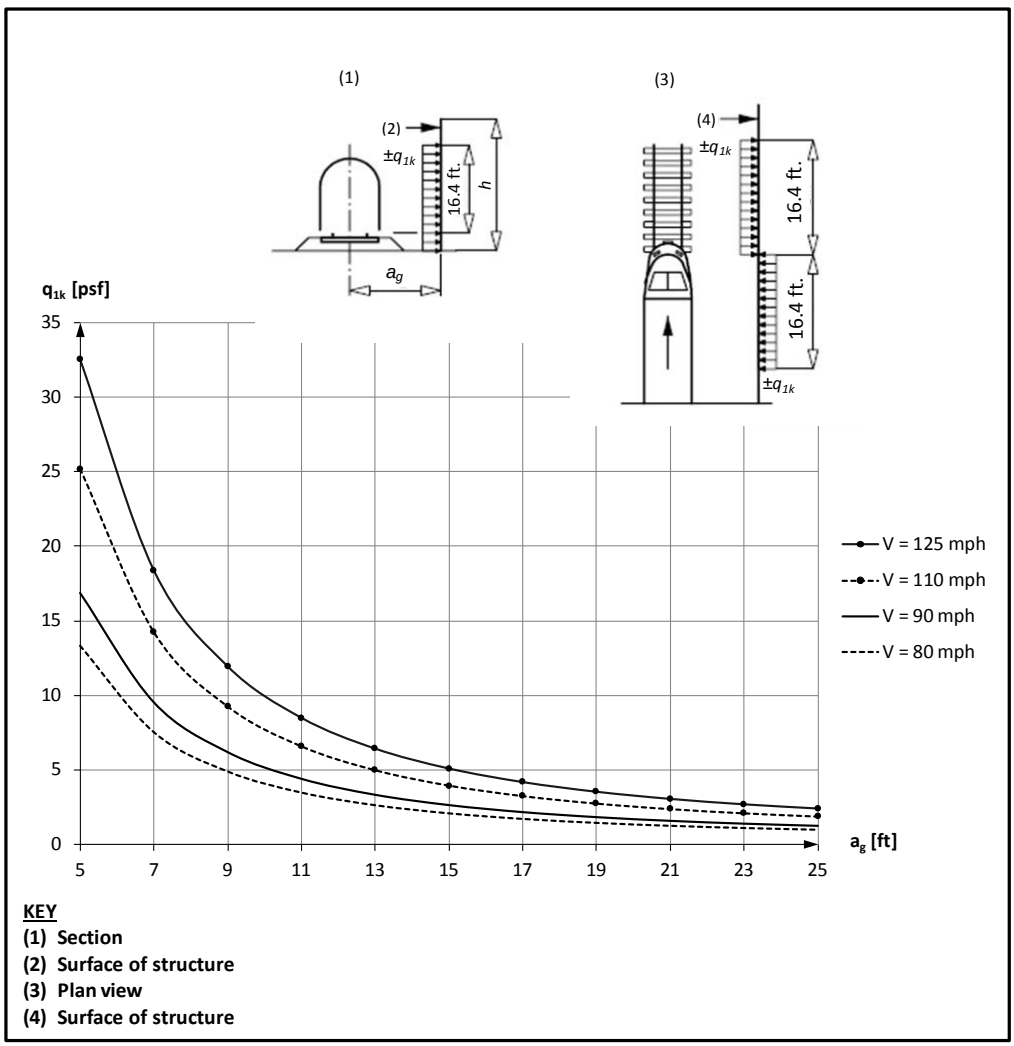

RFP No.: 13-57 – Addendum No. 5 - 10/09/2014

Figure 12-3: Equivalent Loads q_{1k} for Simple Vertical Surfaces Parallel to Track for Speeds Greater than 125 mph

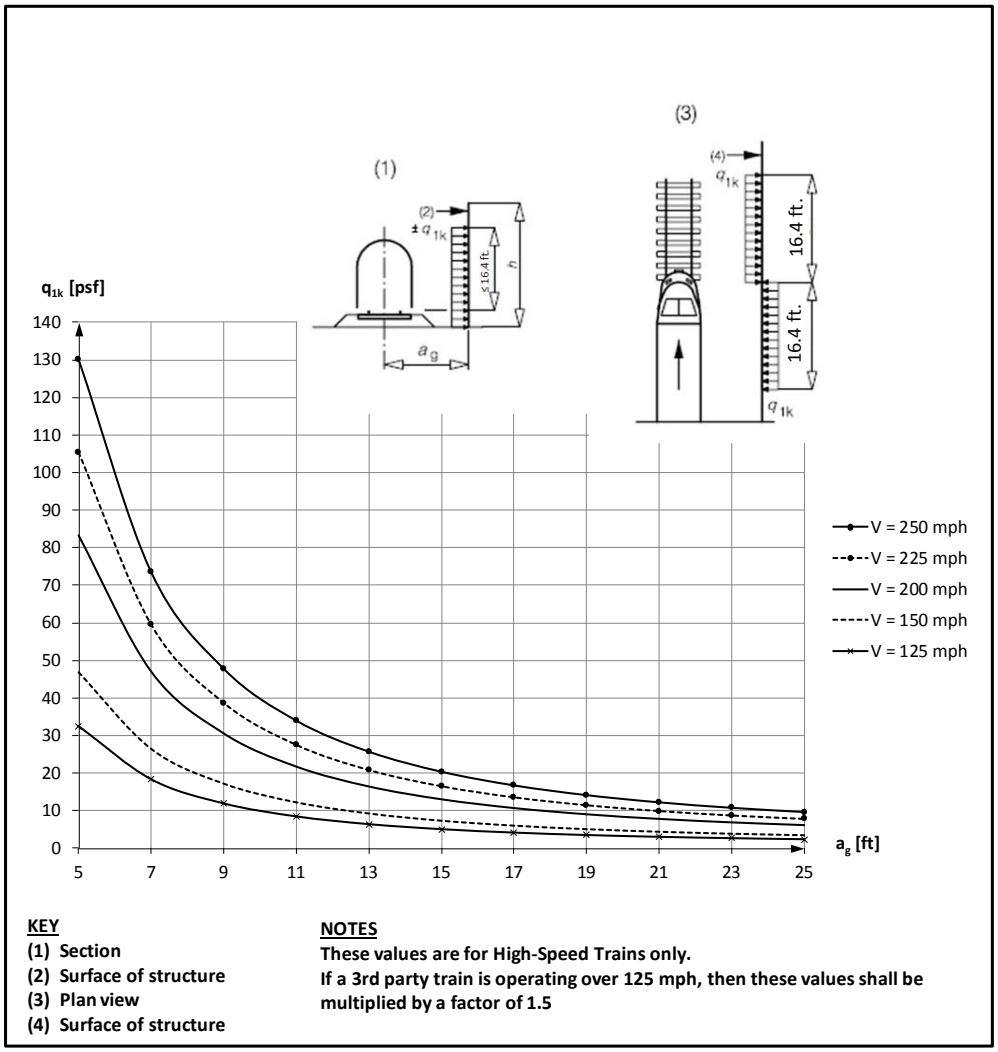

The equivalent loads apply to trains with an unfavorable aerodynamic shape and may be reduced by the following factors:

- A factor $k_1 = 0.85$ for trains with smooth sided rolling stock
- A factor $k_1 = 0.6$ for streamlined rolling stock (e.g., ETR, ICE, TGV, Eurostar or similar)

If a small part of a wall with a height ≤ 3 feet and a length ≤ 8 feet is considered (e.g., an element of a wall), the actions q_{1k} shall be increased by a factor $k_2 = 1.3$.

For surfaces perpendicular to the train, the actions q_{1k} shall be taken from Figure 12-2 and Figure 12-3 for the distance indicated from TCL modified as described in the previous items.

RFP No.: 13-57 – Addendum No. 5 - 10/09/2014

C. Simple Horizontal Surfaces Above the Track

For simple horizontal surfaces above the track, such as overhead protective structures, equivalent loads, ± q_{2k}, shall apply as given in Figure 12-4 and Figure 12-5. The loaded width shall extend to 32.8 feet on each side of the TCL.

Figure 12-4: Equivalent Loads q_{2k} for Simple Horizontal Surfaces Above Track for Speeds Less than 125 mph

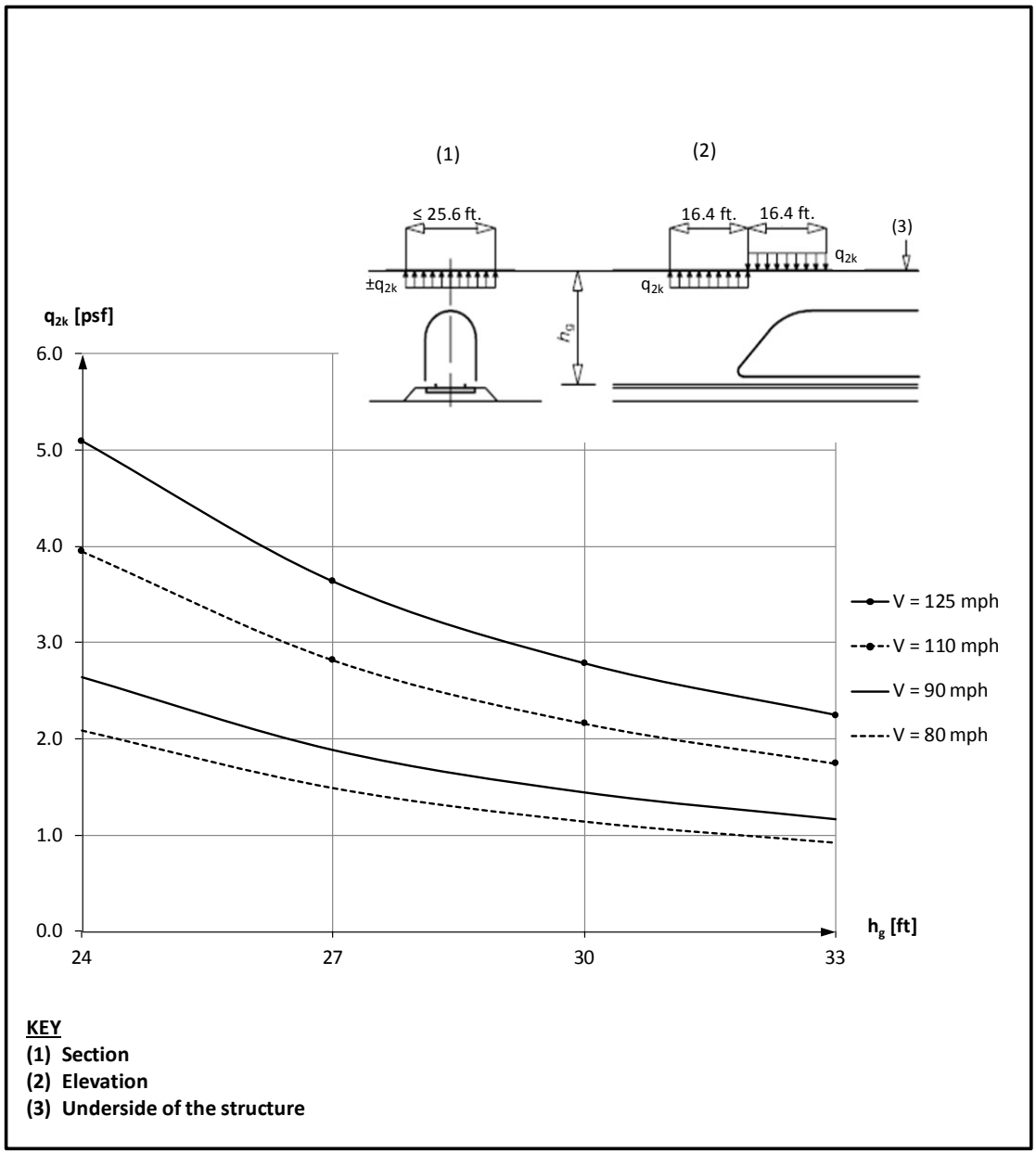

RFP No.: 13-57 – Addendum No. 5 - 10/09/2014

Figure 12-5: Equivalent Loads q_{2k} for Simple Horizontal Surfaces Above Track for Speeds Greater than 125 mph

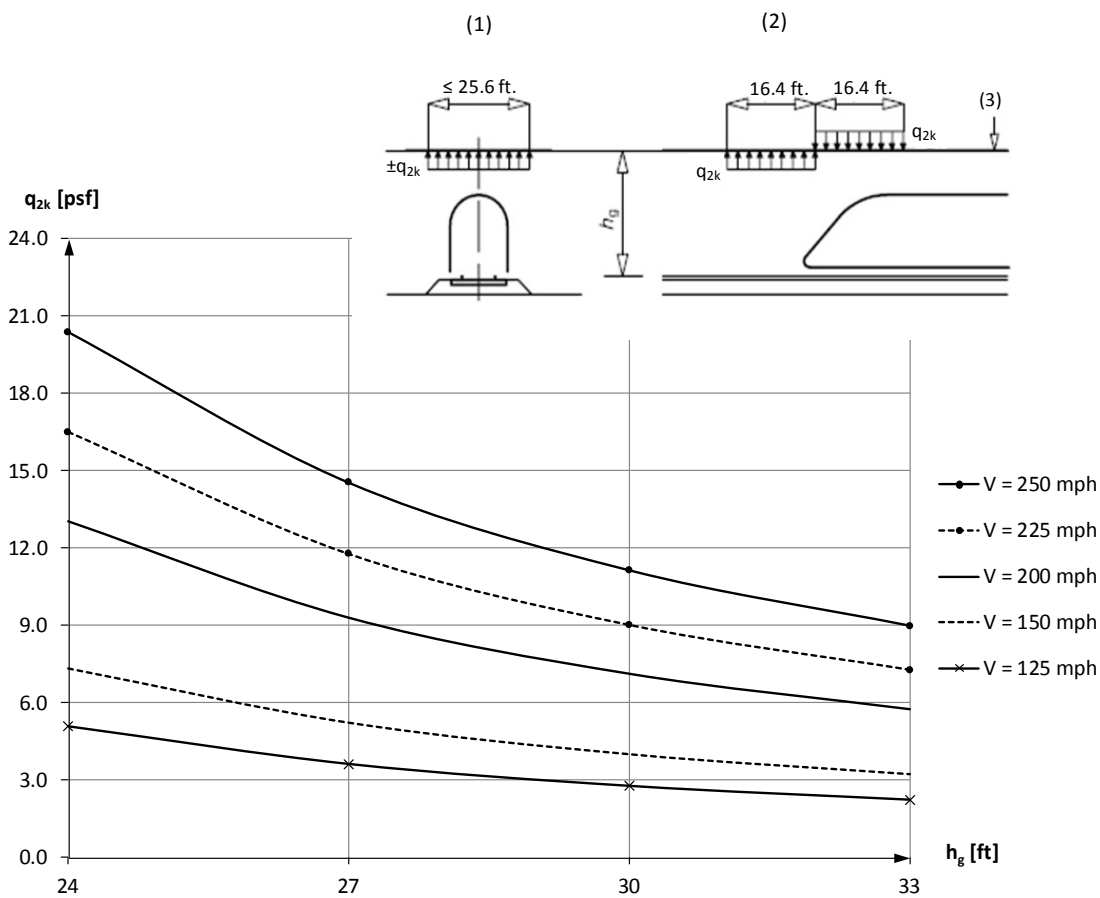

KEY
(1) Section
(2) Elevation
(3) Underside of the structure

NOTES
These values are for High-Speed Trains only.
If a 3rd party train is operating over 125 mph, then these values shall be multiplied by a factor of 1.5

For trains passing in opposite directions, the actions shall be added. The loading from trains on only 2 tracks shall be considered.

The actions q_{2k} may be reduced by the factor k_1 as defined in Section 12.5.2.7-B.

The actions acting on the edge strips of a wide structure (greater than 32.8 feet) crossing the track may be multiplied by a factor of 0.75 over a width up to 16.4 feet.

RFP No.: 13-57 – Addendum No. 5 - 10/09/2014

D. Simple Horizontal Surfaces Adjacent to the Track

For simple horizontal surfaces adjacent to the track, such as platform canopies with no vertical walls, equivalent loads, ± q3k, shall apply as depicted on Figure 12-6 irrespective of the aerodynamic shape of the train.

Figure 12-6: Equivalent Loads q_{3k} for Simple Horizontal Surfaces Adjacent to Track

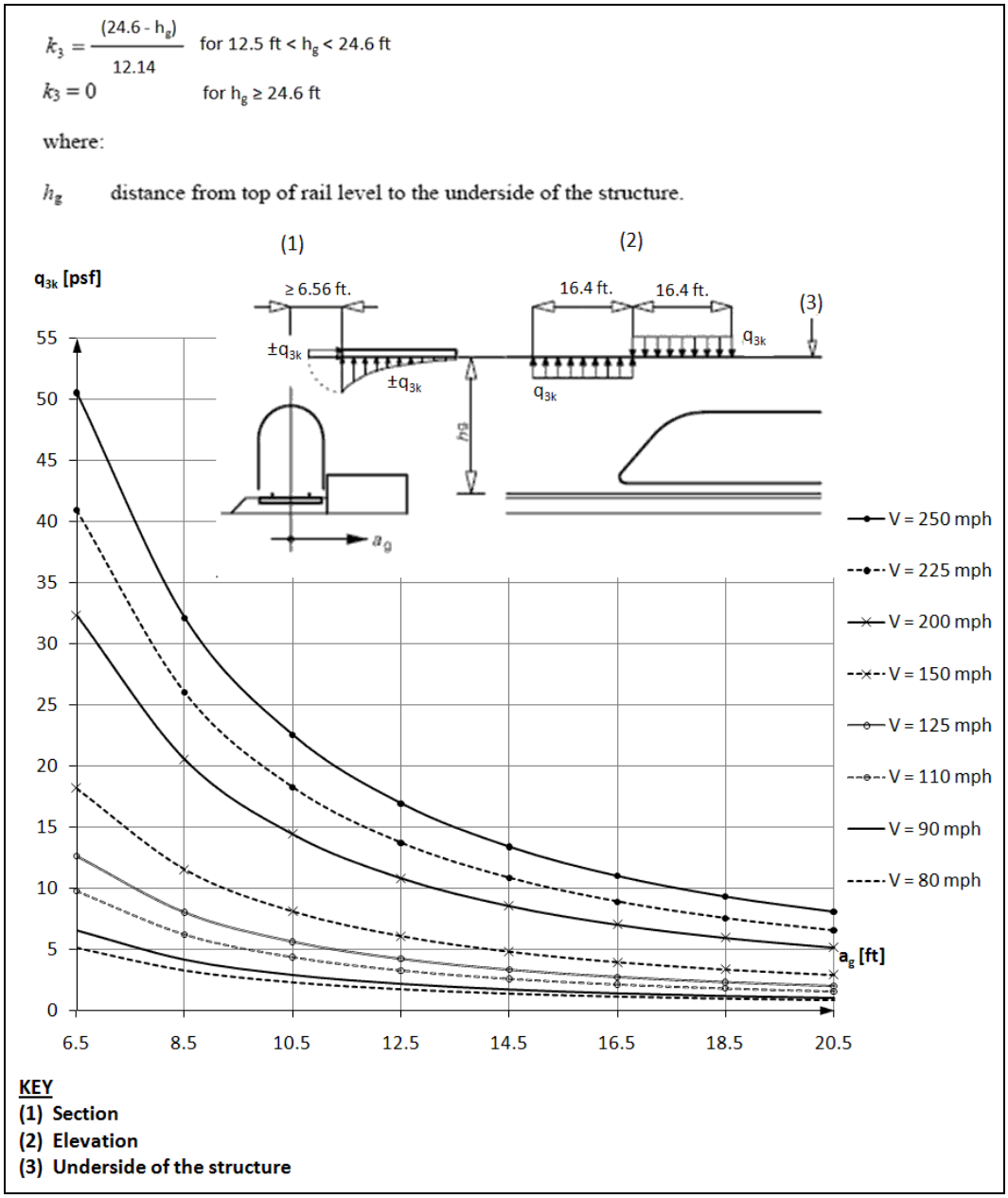

RFP No.: 13-57 – Addendum No. 5 - 10/09/2014

For every position along the structure to be designed, q_{3k} shall be determined as a function of the distance a_g from the nearest track. The actions shall be added if there are tracks on either side of the structural member under consideration.

If the distance h_g exceeds 12.5 feet the action q_{3k} may be reduced by the factor k_3 as given in Figure 12-6.

E. Multiple-Surface Structures Alongside the Track with Vertical and Horizontal or Inclined Surfaces

For multiple-surface structures alongside the track with vertical and horizontal or inclined surfaces, such as noise barriers and platform canopies with vertical walls, equivalent loads, ± q_{4k}, shall apply as given in Figure 12-7. The actions shall be taken from the graphs in Figure 12-2 and Figure 12-3 adopting a track distance the lesser of:

$$a'_g = 0.6*(\min a_g) + 0.4*(\max a_g) \text{ or } 20 \text{ feet}$$

Where:

distances min a_g and max a_g are shown in Figure 12-7

If max $a_g > 20$ feet the value max $a_g = 20$ feet shall be used.

The factors k_1 and k_2 defined in Section 12.5.2.7-B shall apply.

Figure 12-7: Definition of the Distances min a_g and max a_g from Centerline of Track

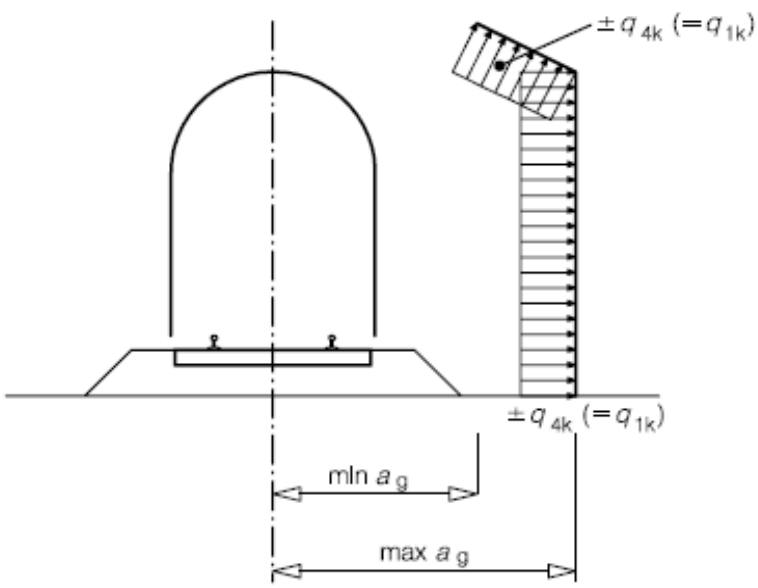

RFP No.: 13-57 – Addendum No. 5 - 10/09/2014

F. Surfaces Enclosing the Structure Gauge of the Tracks over a Limited Length (< 65 feet)

For surfaces enclosing the structure gauge of the tracks over a limited length ≤ 65 feet, such as horizontal surfaces above the tracks with at least 1 vertical wall or scaffolding and temporary structures, equivalent loads shall apply irrespective of the aerodynamic shape of the train:

- To the full height of the vertical surfaces:

$$\pm k_4 q_{1k}$$

Where:

q_{1k} is determined according to Section 12.5.2.7-B

$k_4 = 2$

- To the horizontal surfaces:

$$\pm k_5 q_{2k}$$

Where:

q_{2k} is determined according to Section 12.5.2.7-C for only 1 track,

$k_5 = 2.5$ if 1 track is enclosed

$k_5 = 3.5$ if 2 tracks are enclosed

G. Surfaces Perpendicular to or Above the Tracks over a Limited Length

For surfaces perpendicular to or above the tracks over a limited length, such as wayside equipment and signs oriented normal to the track, equivalent loads shall apply as given in Figure 12-2 and Figure 12-3 for vertical surfaces, and Figure 12-4 and Figure 12-5 for horizontal surfaces.

12.5.2.8 Thermal Load (TU, TG)

For uniform (TU) and gradient (TG) temperature effects of the structure, the requirements in AASHTO LRFD BDS with California Amendments Article 3.12 shall be used. Consideration shall be given to the maximum and minimum ambient temperatures.

Rail-structure interaction forces due to the constraint of structural movement to uniform and gradient temperature effects shall be considered as specified in Section 12.5.3.4.

12.5.2.9 Frictional Force (FR)

The force due to friction (FR) shall be established on the basis of extreme values of the friction coefficient between sliding surfaces (i.e., at bearing pads). Where appropriate, the effects of moisture, degradation, and contamination of sliding or rotating surfaces upon the friction coefficient shall be considered.

RFP No.: 13-57 – Addendum No. 5 - 10/09/2014

Where applicable, recommended frictional values per AASHTO LRFD BDS with California Amendments shall be used.

12.5.2.10 Seismic Loads

Detailed, project specific seismic design criteria are presented in the *Seismic* chapter. The *Seismic* chapter defines seismic design philosophies, seismic analysis/demand methodologies, and structural capacity evaluation procedures for the 2 levels of design earthquakes.

12.5.2.11 Hydrodynamic Force (WAD)

Hydrodynamic pressure effects acting on submerged portions of structures due to dynamic motion shall be computed using the method of Goyal and Chopra, or by equivalent means.

For possible additional hydrodynamic force effects, refer to the geotechnical reports described in the *Geotechnical* chapter.

12.5.2.12 Dynamic Earth Pressures (ED)

Dynamic earth pressure due to seismic motion acting on retaining structures shall be computed using the methods presented in the *Geotechnical* chapter.

12.5.2.13 Derailment Loads (DR)

A. LLRR and LLV

In the event of derailment, damage to bridges, aerial structures, or grade separations shall be minimal. Overturning or collapse of the structure shall not be allowed.

The following design situations shall be considered:

- **Case I** – The derailed vehicles remaining in the track area on the bridge deck with vehicles retained by the adjacent rail or a trackside cable trough wall, refer to Figure 12-8.
- **Case II –** The derailed vehicles balanced on the edge of the bridge and loading the edge of the superstructure (excluding non-structural elements such as walkways), refer to Figure 12-9.
- **Case III –** Derailment of a steel wheel impacting the bridge deck between trackside cable trough wall shall be evaluated using the heaviest axle loads that potentially use the structure with a minimum of the Cooper E-50. In shared use corridors, 2 axles weighing 75 kips each with a longitudinal spacing of 9.0 feet shall be considered. A 100 percent impact factor shall be applied. This force is used to design the concrete deck slab. Refer to item B of this section.
- **Case IV** – Derailment of railway vehicles on a through or semi-through type bridge, aerial structure, or grade separation shall be designed such that the sudden rupture of 1 vertical or diagonal member of the main truss, the sudden rupture of 1 top flange of the main girder or the sudden rupture of 1 hanger of the main arch shall not cause collapse of the structure.

RFP No.: 13-57 – Addendum No. 5 - 10/09/2014

For Case I, collapse of any part of the structure is not permitted. Minor local damage is permitted. The structure shall be designed for the following design loads in the Extreme Loading Combination:

- Cooper E-50 loading, (both point loads W and uniformly distributed loading w) parallel to the track in the most unfavorable position inside an area of width 1.5 times the track gauge on either side of the TCL, or as limited by trackside cable trough walls. If a trackside cable trough wall is used for containment of the train within 1.5 times the track gauge, a coincident horizontal load perpendicular to the track direction shall be used. This horizontal load shall be applied at the top of the trackside cable trough wall.

Figure 12-8: Derailment Case I

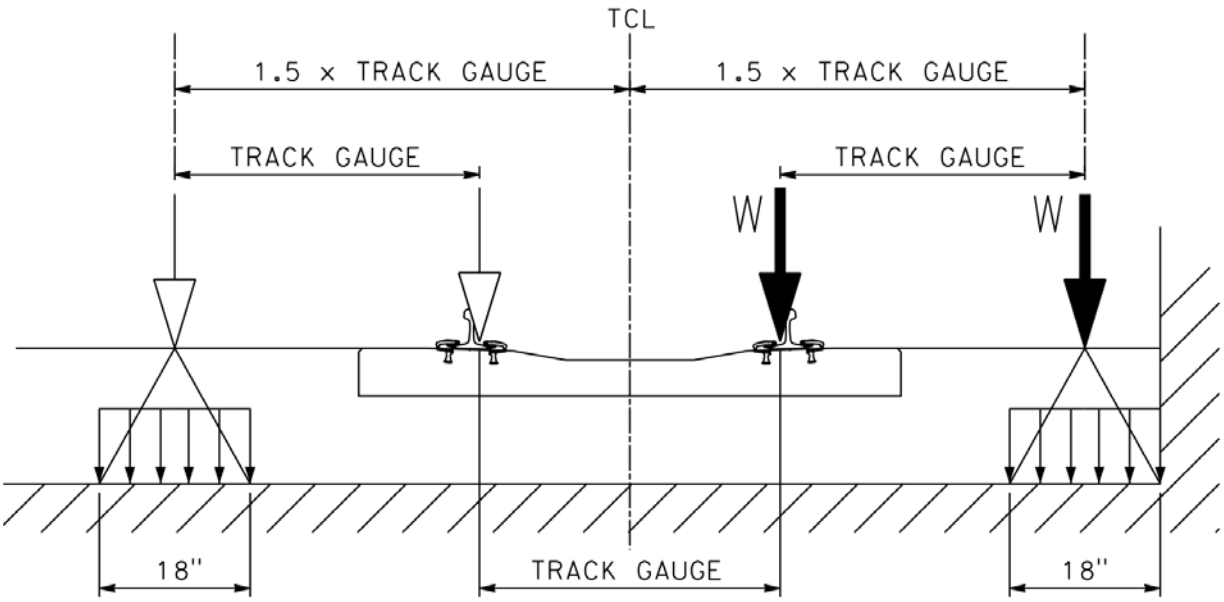

For Case II, the bridge shall not overturn or collapse. For the determination of overall stability, a maximum total length of 65 feet of Cooper E-50 uniform load shall be taken as a single uniformly distributed vertical line load, WL, acting on the edge of the structure under consideration. For structures with trackside cable trough wall, this load shall be applied at the wall face.

RFP No.: 13-57 – Addendum No. 5 - 10/09/2014

Figure 12-9: Derailment Case II

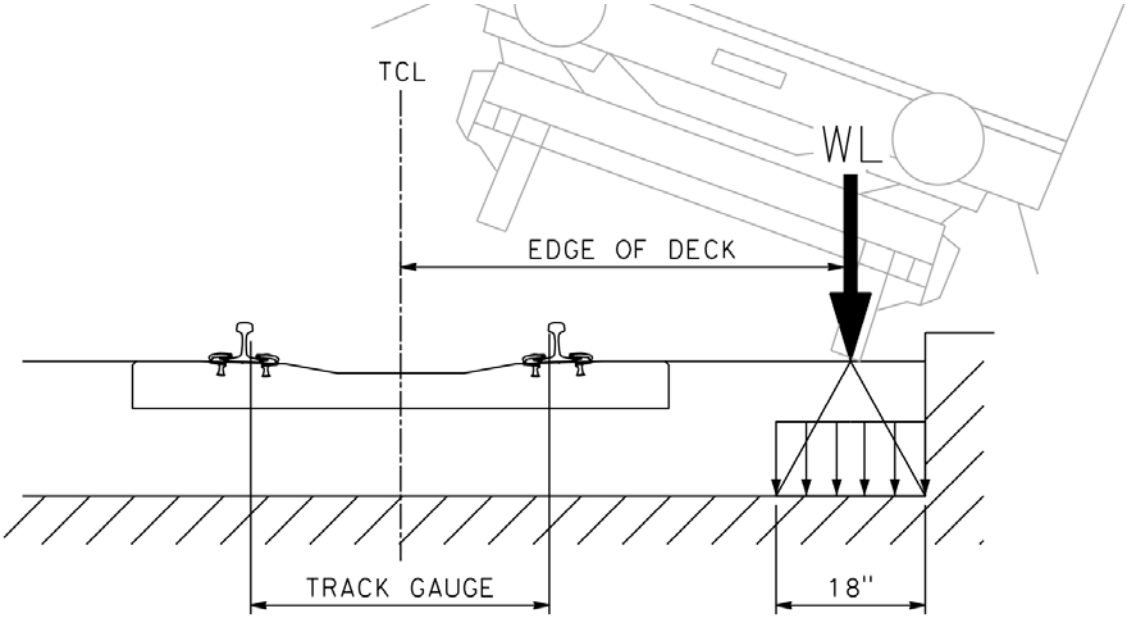

Cases I and II shall be examined separately. A combination of these loads need not be considered.

For ballasted track, lateral distribution of wheel load may be applied, as shown on Figure 12-8 and Figure 12-9.

For Cases I and II, other rail traffic actions shall be neglected for the track subjected to derailment actions. When the structure under consideration carries more than 1 track, only 1 train shall be considered to have derailed, with other tracks containing a vehicle without impact if producing an unfavorable action. Multiple live load presence factors specified in Section 12.5.2.1D shall apply in this case.

No dynamic factor needs to be applied to the derailment loads for Case 1 and Case II. However, the loads shall be multiplied by the load factor within load combinations. A load factor of 1.0 shall apply to Case III and Case IV.

B. Trackside Cable Trough Wall

Trackside cable troughs on mainline bridges, aerial structures, grade separations, trenches and tunnel structures shall be designed to resist a transverse horizontal concentrated load of 35 kips applied at top of the wall at any point of contact. The load shall be distributed over a longitudinal length of 1 foot. A load factor of 1.4 shall be applied to the 35 kip load. The height of the wall shall be minimum 8 inches above the level of the adjacent low rail elevation. These walls shall terminate at the back of abutment backwalls or at the termination of the trench or tunnel base slab.

RFP No.: 13-57 – Addendum No. 5 - 10/09/2014

12.5.2.14 Collision Loads (CL)

Collision loads in Sections 12.5.2.14-A, 12.5.2.14-B, and 12.5.2.14-C apply to train impact loads (LLRR, LLV). Section 12.5.2.14-D applies to highway collision loads (LLH). Refer to Section 12.7 for collision loads on columns or divider walls of stations or platforms adjacent to the HST tracks.

A. Collision Loads on Piers, Columns, Abutments and Retaining Walls

Unprotected piers, columns, abutments and retaining walls shall be designed to resist train collision forces of 900 kips parallel and 350 kips perpendicular to the adjacent TCL. The loads shall be applied to a strip 6 feet in width at a height 6 feet above TOR if unprotected structural members are within 25 feet of the adjacent TCL, or at a height 6 feet above grade if otherwise. Forces shall not be applied simultaneously.

The performance of unprotected Primary Type 2 structural members to this loading shall be a no collapse requirement. The performance of unprotected Primary Type 1 structural members to this loading shall be subject to the following allowable strain and displacement limits:

$\varepsilon_{su}^{a} \leq \varepsilon_{sh}$ (Equation 12.5.2.14-1)

$\varepsilon_{cu}^{a} \leq 0.003$ (Equation 12.5.2.14-2)

$\Delta_{u}^{a} \leq ½$ inches (Equation 12.5.2.14-3)

Where: ε_{su}^{a} = allowable reinforcing steel tensile strain limit

ε_{sh} = reinforcing steel tensile strain at the onset of strain hardening per CSDC

ε_{cu}^{a} = allowable concrete compressive strain limit

Δ_{u}^{a} = allowable lateral permanent offset at the top of superstructure of unprotected Primary Type 1 piers, columns and abutments or at the top of unprotected Primary Type 1 retaining walls

Nominal material properties shall be used in calculating the structural demands and capacities.

B. Collision Loads on Intrusion Protection and Pier Protection Walls

Refer to the *Rolling Stock and Vehicle Intrusion Protection* chapter for dimensions of intrusion protection and pier protection walls.

Intrusion protection and pier protection walls shall be designed to resist train collision forces of 900 kips parallel and 350 kips perpendicular to the adjacent TCL. The loads shall be applied to a strip 6 feet in width at a height 6 feet above adjacent grade for intrusion protection walls or at a height 6 feet above TOR for pier protection walls. Forces shall not be applied simultaneously. The performance of intrusion protection and pier protection walls to this loading shall be a no collapse requirement. Nominal material properties shall be used in calculating the structural demands and capacities.

RFP No.: 13-57 – Addendum No. 5 - 10/09/2014

C. Structures in Areas beyond Track Ends

Overrunning of rail traffic beyond the end of a track (for example at a terminal station) shall be considered as an accidental design situation when the structure or its supports are located in the area immediately beyond the track ends.

The measures to manage the risk shall be based on the utilization of the area immediately beyond the track end and take into account any measures taken to reduce the likelihood of an overrun of rail traffic.

Members supporting structures shall not be located in the area immediately beyond the track ends.

Where structural supporting members are required to be located near to track ends, an end impact wall shall be provided within 20 feet of the track ends in addition to any buffer stop.

End impact walls shall be designed to resist train collision forces of F_{dx} = 1125 kips for passenger trains and F_{dx} = 2250 kips for freight trains or heavy engines pulling conventional passenger cars. The loads shall be applied horizontally to a strip 6 feet in width at a height 4 feet above TOR. The performance of structural supporting members near the track end to this loading shall be a no collapse requirement. Nominal material properties shall be used in calculating the structural demands and capacities.

D. Highway Vehicle Collision Loads (LLH)

Highway collision load shall be as per AASHTO LRFD BDS with California Amendments Article 3.6.5.

12.5.3 Miscellaneous Loads

12.5.3.1 Loads and Load Combinations for Design of the Surrounding Area of the Embedded Sleeves of Overhead Contact System Pole Foundation

The embedded sleeves as specified in the Table 12-2 for the OCS pole and down guy anchors shall be installed in the outside compartment of the cable trough on both sides of structural deck at an equal spacing of not more than 30 feet in each span along the aerial structure and the longitudinal offset distance from the centerline of the pier to the centerline of sleeve pattern shall be equal to 1/2 of the equal spacing. The center of embedded sleeves shall not be located within 5 feet to the centerline of bridge expansion joint. For the transverse offset distance from the centerline of track, refer to the Standard and Directive Drawings. The embedded sleeves on each side of the aerial structure shall be directly opposite each other.

At the special tracks such as the crossover and turnout tracks on the aerial structures, the embedded sleeves shall be installed in the outside compartment of the cable trough on both sides of structural deck at a 10 feet equal spacing. This requirement shall apply to a 300 feet distance from the point of switch (PS) on both sides for a total of 600-foot length.

RFP No.: 13-57 – Addendum No. 5 - 10/09/2014

At the aerial structures adjacent to the station platforms, the embedded sleeves shall be installed at the center between the through track and the station track and installed at a 30 feet equal longitudinal spacing.

Provisions shall be provided for all sleeves to prevent water leakage through the sleeves and allow for future OCS anchor bolt installation.

The loads, load combinations, and limit states specified in Table 12-2 shall be investigated for design of the surrounding area of the embedded sleeves at every OCS foundation to properly transfer the loads to the bridge deck.

Table 12-2: Loads and Load Combinations for Design of Overhead Contact System Pole Foundations

Load Combination / Limit State	Location	Load Type	V1 (lbs)	V2 (lbs)	P (lbs)	M1 (lb-ft)	M2 (lb-ft)	Load Factor
Strength I	OCS pole	Dead	1,500	1,500	-22,000	31,500	31,500	1.25
		Wind	Refer to note 4					1.40
Strength II	OCS pole	Dead	1,500	1,500	-22,000	31,500	31,500	1.25
		Slipstream Effects	Refer to note 4					1.75
Strength III	OCS pole	Dead	1,500	1,500	-22,000	31,500	31,500	1.25
		Wind	Refer to note 4					0.65
		Slipstream Effects	Refer to note 4					1.35
Strength IV	Down guy anchor	Dead	14,000	1,000	14,000	1,000	14,000	1.25
Extreme I	OCS pole	Accident	14,000	1,500	-8,000	31,500	294,000	1.0
		Slipstream Effects	Refer to note 4					1.0

Sleeve Pattern and Plate Size			
Anchor Bolt	**Bolt Circle**	**Sleeve Size**	**Plate Size**
4-2.25" Dia.	24"	2.5"	24" x 24"

Notes:

1. V_1 denotes shear force parallel to track alignment; V_2 denotes shear force perpendicular to the track alignment.
2. P denotes vertical force, with positive values for tension and negative values for compression.
3. M_1 denotes bending moment about axis parallel to the track alignment; M_2 denotes bending moment about axis perpendicular to the track alignment.
4. Wind load shall be determined according to Section 12.5.2.6; Slipstream effects load shall be determined according to Section 12.5.2.7. Wide flange shape with width of 15 inches, depth of 15 inches, and height of 27 feet shall be used in the calculations of OCS pole foundation loads transferred from OCS pole wind load and slipstream effects load.
5. Loads are assumed at the TOR.

12.5.3.2 Loads and Load Combinations for Design of Traction Power Facility Gantry Pole Supports on Aerial Structures

The embedded sleeves for the gantry pole foundations shall be installed in the outside compartment of the cable trough on both sides of structural deck at an equal spacing of not

RFP No.: 13-57 – Addendum No. 5 - 10/09/2014

more than 10 feet in the designated 2 spans located adjacent to Paralleling Stations, Switch Stations, and Sub Stations. The center of embedded sleeves shall not be located within 5 feet to the centerline of bridge expansion joint. For the transverse offset distance from the centerline of track, refer to the Standard and Directive Drawings. The embedded sleeves on each side of the aerial structure shall be directly opposite each other.

On single track girders, the gantry pole foundations shall be in line with the OCS poles on the same side of the single track girder.

Provisions shall be provided for all sleeves to prevent water leakage through the sleeves and allow for future gantry pole anchor bolt installation.

The loads, load combinations, and limit states specified in Table 12-3 shall be investigated for design of the surrounding areas of the embedded sleeves at every gantry pole foundation to properly transfer the loads to the bridge deck.

The pattern and size of embedded sleeves and plate shall be determined by the Designer and provided on the drawings.

Table 12-3: Loads and Load Combinations for Design of Traction Power Facility Gantry Pole Supports on Aerial Structures

Load Combination / Limit State	Load Type	V1 (lbs)	V2 (lbs)	P (lbs)	M1 (lb-ft)	M2 (lb-ft)	Load Factor
Strength I	Dead	--	5,800	-14,500	230,000	--	1.25
	Wind	Refer to note 4					1.40
Strength II	Dead	--	5,800	-14,500	230,000	--	1.25
	Slipstream Effects	Refer to note 4					1.75
Strength III	Dead	--	5,800	-14,500	230,000	--	1.25
	Wind	Refer to note 4					0.65
	Slipstream Effects	Refer to note 4					1.35
Strength IV	Dead	--	5,800	-14,500	230,000	--	1.25
	Slipstream Effects	Refer to note 4					0.5
	OBE	Refer to note 5					1.0
Extreme I	Dead	--	5,800	-14,500	230,000	--	1.0
	MCE	See note 5					1.0

Notes:

1. V_1 denotes shear force parallel to track alignment; V_2 denotes shear force perpendicular to the track alignment.
2. P denotes vertical force, with positive values for tension and negative values for compression.
3. M_1 denotes bending moment about axis parallel to the track alignment; M_2 denotes bending moment about axis perpendicular to the track alignment.
4. Wind load shall be determined according to Section 12.5.2.6; Slipstream effects load shall be determined according to Section 12.5.2.7. Wide flange shape W24x117 with height of 40 feet, with 100 percent and 300 percent wind load area increases in along track and transverse directions respectively to account for the cross beams and attachments, shall be used in the calculations of gantry pole foundation loads transferred from gantry wind load and slipstream effects load.

RFP No.: 13-57 – Addendum No. 5 - 10/09/2014

5. Operating Basis Earthquake (OBE) and Maximum Considered Earthquake (MCE) shall be investigated according to the *Seismic* chapter. The pole shall be considered as cantilever, with weight of 11,000 pounds and the center of mass at 27 feet above the TOR.
6. Loads are assumed at the TOR.

12.5.3.3 Construction Loads and Temporary Structures

A. Temporary Structure Classification

Temporary structures are divided into the following classifications:

- **Type A** – Temporary structures or permanent structures under temporary conditions that carry or will carry HSTs and/or pass over routes carrying HSTs. Subsequent articles herein apply to Type A structures.
- **Type B:** – Temporary structures or permanent structures under temporary conditions that do not carry HSTs and do not pass over routes carrying HSTs. These structures shall be designed in accordance with the requirements of the owning/operating agency (e.g., AASHTO LRFD BDS with California Amendments and CMTD). Structures such as haul bridges used temporarily shall be designed in accordance with CMTD 15-14.

B. Construction Load Combinations

Type A temporary structures or permanent structures under temporary conditions shall be designed to adequately resist conditions at all stages of construction, including applicable construction loads. Construction load combinations, in addition to requirements shown in Table 12-4, shall include the following:

- Applicable strength load combinations: Dead load factors shall not be taken less than 1.25, with construction dead loads taken as permanent loads. Construction transient live load factors shall not be taken less than 1.5. Wind load factors may be reduced by 20 percent.
- Service 1, as applicable, refer to AASHTO LRFD BDS with California Amendments Article 3.4.2.
- For seismic requirements of temporary structures, refer to the *Seismic* chapter.

In the absence of specific criteria, a construction live load of 20 psf shall be assumed on the bridge deck.

C. Segmental Construction and Specialized Equipment

Construction load combinations per AASHTO LRFD BDS with California Amendments Article 5.14.2 "Segmental Construction" shall be considered. The temporary seismic load event as described in the *Seismic* chapter shall be added to the construction load combination at Strength 5 limit state; however a 1.25 load factor shall be used for dead and live loads. The temporary seismic event need not be combined with the dynamic construction load impact due to segment drop or equipment impact. For balanced cantilever construction methods an additional 2 percent of dead load shall be applied to reflect eccentric conditions at the time of a potential seismic event.

RFP No.: 13-57 – Addendum No. 5 - 10/09/2014

D. Temporary Support of Excavation

Temporary supports for excavations include structural elements such as struts, braces, wales, soldier piles, walls and the like. Provisions shall be made for analysis and design of these structural elements, so as not to impose any temporary or permanent adverse effects on adjacent structures and ground surfaces. Soil conditions, earth pressures and distribution of earth pressures, and soil resistance shall be taken from geotechnical reports described in the *Geotechnical* chapter.

12.5.3.4 Rail-Structure Interaction Forces

Consideration shall be made for forces caused by the constraint of structural movement due to continuous welded rail (CWR). Rail-structure interaction (RSI) can alter the load path distribution, modifying the magnitude and direction of forces applied to the structure or the rail. The constraint of structural movement due to the following effects shall be considered for design:

- Creep (CR)
- Shrinkage (SH)
- Secondary forces from prestressing (PS)
- Uniform temperature (TU)
- Temperature gradient (TG)

RSI modeling technique as specified in Section 12.6.8 shall be used for determining the increased demand forces for the structure. RSI analysis shall consider a specific construction method and construction schedule as well as time-dependent deformations of CR, SH and PS as specified in AASHTO LRFD BDS with California Amendments Articles 4 and 5. Load factors for the increased demand forces due to CR, SH and PS shall be as defined in Table 12-7. Load factors for the increased demand force due to TU and TG shall be as defined in Table 12-4. A temperature differential (T_D) of ±40°F between rails and deck, applied to the superstructure, may be used for determining the increased demand force due to TU. These increased demand forces shall be included in appropriate load combinations for each limit state to satisfy equation 12.5.4-1.

It is critical that rail stress caused by RSI be controlled to minimize probability of rail fracture. Design guidance and structural requirements to limit rail stress are provided in Section 12.6.

12.5.3.5 Blast Loading

Blast loadings and measures are not specified at this time. Refer to Section 12.13 for general requirements. Refer to AASHTO LRFD BDS with California Amendments Article 3.15 for additional requirements.

RFP No.: 13-57 – Addendum No. 5 - 10/09/2014

12.5.4 Load Factors and Load Modifiers

Regardless of the type of analysis used, the Equation 12.5.4-1 shall be satisfied for specified factored force effect and load combinations for each limit state unless otherwise specified in this chapter:

$$\Sigma\, \eta_i\, \gamma_i\, Q_i \leq \Phi R_n = R_r \quad \text{(Equation 12.5.4-1)}$$

Where:

γ_i = load factor applied to force effects (refer to Tables 12-4, 12-6 and 12-7)

Φ = resistance factor applied to nominal resistance (refer to AASHTO LRFD BDS with California Amendments Article 1.3.2.1)

η_i = load modifier relating to ductility, redundancy and importance (refer to AASHTO LRFD BDS with California Amendments Article 1.3.2.1)

Q_i = force effect

Rn = nominal resistance

Rr = factored resistance, ΦRn

For loads in which a maximum value of "η_i" produces an unfavorable action, the value of "η_i" shall be equal to 1.05 to account for the design life of the facility. The load modifier is applicable to strength limit load combinations only.

12.5.4.1 Design Load Combinations

The load combinations to be used for structures are shown in Table 12-4. The description of the load combinations are as follows:

- "Strength 1" is the basic load combination for normal use.
- "Strength 2" is the load combination for the structure when exposed to wind.
- "Strength 3" is the load combination for very high dead load to live load force effect ratios.
- "Strength 4" is the load combination for normal use when exposed to wind.
- "Strength 5" is the load combination for normal use when designing columns for OBE.
- "Extreme 1" is the load combination for derailment.
- "Extreme 2" is the load combination for collision.
- "Extreme 3" is the load combination for extreme seismic events (MCE).
- "Service 1" is the basic service load combination for normal use with wind.
- "Service 2" is the service load combination intended to control yielding of steel structures and slip of slip-critical connections due to train load.

RFP No.: 13-57 – Addendum No. 5 - 10/09/2014

- ”Service 3” is the service load combination relating to tension in prestressed concrete superstructures with the objective of crack control and principal tension in the webs of segmental concrete girders.
- “Buoyancy at Dewatering Shutoff” is a service load for evaluation of uplift with a minimum weight structure.
- “Fatigue” is the fatigue and fracture load combination relating to repetitive vertical train loading.

Note that for each load combination, physically achievable subsets (i.e., omitting loads by setting load factor $\gamma_i = 0$) that may govern design shall be considered.

Note that other load cases for train and track structure interaction are contained within Section 12.6.

Note that the rail-structure interaction forces specified in Section 12.5.3.4 shall be considered in the design load combinations.

RFP No.: 13-57 – Addendum No. 5 - 10/09/2014

Table 12-4: Load Combinations for Design of Structures

Load Combinations and Load Factors, γ_i Load Combination/ Limit State	DC DW DD EV EH ES EL PS CR SH	LLP LLV + I LLRR + I LLH + I LLS LF NE CF SS	WA FR	WS	WL	TU	TG	SE	DR	CL	OBE WA D ED	MCE WA D ED
Strength 1	γ_P	1.75	1.00	--	--	0.50/ 1.20	--	γ_{SE}	--	--	--	--
Strength 2	γ_P	--	1.00	1.40	--	0.50/ 1.20	--	γ_{SE}	--	--	--	--
Strength 3	γ_P	--	1.00	--	--	0.50/ 1.20	--	--	--	--	--	--
Strength 4	γ_P	1.35	1.00	0.65	1.00	0.50/ 1.20	--	γ_{SE}	--	--	--	--
Strength 5	γ_P	γ_{EQ}	1.00	--	--	--	--	--	--	--	1.0	--
Extreme 1	1.00	1.00	1.00	--	--	--	--	--	1.40	--	--	--
Extreme 2	1.00	0.50	1.00	--	--	--	--	--	--	1.00	--	--
Extreme 3	1.00	γ_{EQ}	1.00	--	--	--	--	--	--	--	--	1.00
Service 1	1.00	1.00	1.00	0.45	1.00	1.00/ 1.20	γ_{TG}	γ_{SE}	--	--	--	--
Service 2	1.00	1.30	1.00	--	--	1.00/ 1.20	--	--	--	--	--	--
Service 3	1.00	1.00	1.00	--	--	1.00/ 1.20	γ_{TG}	γ_{SE}	--	--	--	--
Buoyancy @ Dewatering Shutoff	0.80	--	1.10	0.45	--	--	--	--	--	--	--	--
Fatigue	--	1.00	--	--		--	--	--	--	--	--	--

Notes:

1. Additional load combinations are found in Section 12.6.
2. Additional loads and load combinations for cut-and-cover construction are found in the Technical Manual for Design and Construction of Road Tunnels – Civil Elements; FHWA-NHI-09-010, March, 2009, Chapter 5.
3. γ_{TG} is equal to 1.0 when live load is not considered and 0.50 when live load is considered.
4. γ_{EQ} is equal to 0.0 for MCE. γ_{EQ} is equal to 0.50 for OBE, for a 2 track system, 1 train is used. For other track configurations, refer to the *Seismic* chapter.
5. γ_{SE} is equal to 1.0, in absence of better criteria. For specific areas where settlement values are uncertain, or if otherwise justified, a larger value should apply.
6. γ_{TU} is equal to the larger value for deformations, and the lesser value for force effects.
7. Derailment load factor taken greater than unity to account for absence of dynamic impact. Refer to Section 12.5.2.13- A.
8. WS load factors for Service I and Strength 4 are larger than the AASHTO LRFD BDS with California Amendments to account for a higher wind speed under train operations. Operation of trains is assumed to cease at a wind speed of 67 mph.

RFP No.: 13-57 – Addendum No. 5 - 10/09/2014

Table 12-5: Loading Definitions Used in Table 12-4

Permanent Loads	
DC	dead load of structural components and permanent attachments
DW	dead load of non-structural and non-permanent attachment
DD	downdrag force
EV	vertical earth pressure
EH	lateral static earth pressure
ES	surcharge loads
SE	earth settlement effects
EL	locked-in construction forces
PS	secondary forces from prestressing
CR	creep effects
SH	shrinkage effects
WA	water loads and stream pressure
Transient Loads	
LLP	floor, roof, and pedestrian live loads
LLV	high-speed train live loads
LLRR	maintenance and construction train live loads
LLH	highway live loads
LLS	live load surcharge
I	vertical impact effect
LF	traction or braking forces
NE	nosing and hunting effects
CF	centrifugal force
DR	derailment loads
CL	collision loads
WS	wind load on structure
WL	wind load on live load
SS	slipstream effects
TU	uniform temperature effects
TG	gradient temperature effects
FR	frictional force
MCE	Maximum Considered Earthquake
OBE	Operating Basis Earthquake
WAD	hydrodynamic force
ED	dynamic earth pressures

RFP No.: 13-57 – Addendum No. 5 - 10/09/2014

Table 12-6: Load Factors for Permanent Loads, γ_P

Type of Load, Foundation Type, and Method Used to Calculate Downdrag		γ_p Load Factor	
		Maximum	**Minimum**
DC: Components and Attachments		1.25	0.90
DC: Strength 3 only		1.50	0.90
DD: Downdrag	Piles: α Tomlinson Method	1.40	0.25
	Piles: λ Method	1.05	0.30
	Drilled Shafts: O'Neill and Reese (1999) Method	1.25	0.35
DW: Non-structural dead load and non-permanent attachments		1.50	0.65
EH: Horizontal Earth Pressure			
• Active		1.50	0.90
• At-Rest		1.35	0.90
• AEP for Anchored Walls		1.35	N/A
EL: locked-in construction forces		1.00	1.00
EV: Vertical Earth Pressure			
• Overall Stability		1.00	N/A
• Retaining Walls and Abutments		1.35	1.00
• Rigid Buried Structures		1.30	0.90
• Rigid Frames		1.35	0.90
• Flexible Buried Structures other than Metal Box Culverts		1.95	0.90
• Flexible Metal Box Culverts		1.50	0.90
ES: Surcharge Loads		1.50	0.75

Table 12-7: Load Factors for Permanent Loads due to Superimposed Deformations, γ_P

Bridge Component	PS	CR, SH
Superstructures - Segmental Concrete Substructures supporting Segmental Superstructures (Refer to AASHTO LRFD BDS with California Amendments Articles 3.12.4 and 3.12.5)	1.00	see γ_p for DC, Table 12-4 and Table 12-6
Concrete Superstructures – non-segmental	1.00	1.00
Substructures supporting non-segmental superstructures		
• Using I_{gross}	0.50	0.50
• Using $I_{effective}$	1.00	1.00
Steel Substructures	1.00	1.00

12.5.4.2 Resistance Factors

For resistance factors Φ, refer to AASHTO LRFD BDS with California Amendments.

RFP No.: 13-57 – Addendum No. 5 - 10/09/2014

12.6 Track-Structure Interaction

Analysis of track-structure interaction (TSI) shall apply to Primary Type 1 structures (as defined in the *Seismic* chapter) including, but are not limited to: bridges, aerial structures, grade separations, culverts, and aerial stations supporting HST tracks. These Primary Type 1 structures, which are critical for maintaining track performance, are hereafter referred to as "TSI-critical structures". Span arrangement criteria in Section 12.8.6.13 supplement the deformation and dynamic criteria in this section.

TSI-critical structures are subject to the following design requirements: structural frequency recommendations, track serviceability limits, rail-structure interaction (RSI) limits, dynamic structural analysis limits, and dynamic vehicle track-structure interaction (VTSI) analysis limits.

These requirements are concerned with limiting deformations and accelerations of TSI-critical structures, since the structure response can be dynamically magnified under high-speed moving trains. Excessive deformations and accelerations can lead to unacceptable changes in vertical and horizontal track geometry, excessive rail stress, reduction in wheel contact, dynamic amplification of loads, and passenger discomfort.

Specific criteria limits are provided for structural expansion joints spanned by continuous welded rail (CWR) to reduce the risk of unacceptable track geometry changes and excessive rail stress. For a given TSI-critical structure, all structural discontinuities capable of relative movement (including transitions to other geotechnical elements or tunnels supporting HST tracks) shall be considered to be structural expansion joints and therefore subject to the following applicable relative displacement limits.

Refer to the *Geotechnical* chapter for criteria regarding earthen structures that support HST tracks such as embankments, abutments, retaining walls, and soil subgrades. Refer to the *Tunnels* chapter for criteria regarding tunnels that support HST tracks.

Design assumptions related to track properties (i.e., fasteners, rail section, etc.) found herein are for infrastructure design only and shall not preclude the use of specific track components. Track analysis assumptions not consistent with those provided in this section shall require an approved design variance and shall be provided on the plans.

The following criteria is developed assuming uniform longitudinal rail restraint for structures with maximum structural thermal units (i.e., the maximum distance from a fixed point of thermal expansion to an adjacent fixed point of thermal expansion on a structure) limited to 330 feet. Rail expansion joints are not permitted without an approved design variance.

Table 12-8 summarizes the analysis requirements, including model type, train model/speed, result, and relevant subsections.

RFP No.: 13-57 – Addendum No. 5 - 10/09/2014

Table 12-8: Track-Structure Interaction Analysis Goals

Analysis Goal	Model Type	Train model	Train speed	Result	Subsections
Frequency Analysis	Dynamic	--	--	Frequency Evaluation	12.6.3.1 to 12.6.3.3
Track Serviceability Analysis	Static, For OBE: Static or Dynamic	Single or Multiple Tracks of Modified Cooper E50	--	Deformation Limits	12.6.4.1 to 12.6.4.10
Rail-Structure Interaction Analysis	Static (linear or non-linear), For OBE: Static or Dynamic	Single or Multiple Tracks of Modified Cooper E50	--	Deformation and Rail Stress Limits	12.6.5.1 to 12.6.5.6
Dynamic Structural Analysis	Dynamic	Single Tracks of High-Speed Passage	90 mph to 1.2 Line Speed (or 250 mph whichever is less)	Dynamic Impact Factor, Vertical Deck Acceleration	12.6.6.1 to 12.6.6.4
Dynamic Vehicle-Structure Interaction Analysis	Dynamic (Structure and Trainset)	Single Track of High-Speed Passage (with Vehicle Suspension)	90 mph to 1.2 Line Speed (or 250 mph whichever is less)	Dynamic Track Safety and Passenger Comfort Limits	12.6.7.1 to 12.6.7.3

Frequency analysis, track serviceability analysis, rail-structure interaction (RSI) analysis, and dynamic structural analysis, shall apply for all TSI-critical structures.

Dynamic vehicle-track-structure interaction (VTSI) analysis shall apply only to those TSI-critical structures not in compliance with the deformation and acceleration requirements in Sections 12.6.4 through 12.6.6 Alternatively, VTSI can be required as determined by the Authority for those critical structures departing from service-proven concepts.

12.6.1 Track-Structure Interaction Design and Analysis Plan

The Designer shall develop a Track-Structure Interaction Design and Analysis Plan (TSIDAP) for each TSI-critical structure.

The TSIDAP shall define the following:

- General Classification as Primary Type 1, Primary Type 2, or Secondary, as defined the Seismic chapter
- Technical Classification as Complex, Standard, or Non-Standard, as defined in the Seismic chapter
- Track Type (ballasted or non-ballasted track)

RFP No.: 13-57 – Addendum No. 5 - 10/09/2014

- Track Configuration (number of tracks, station components, special track features)
- The Track Fastener properties assumed for analysis (i.e., longitudinal, vertical, and lateral stiffness)
- The approach used to determine the model boundaries for RSI analysis per Section 12.6.8.7
- The approach for developing vertical and lateral track stiffness properties at adjacent at-grade track per Section 12.6.8.8
- Maximum Operating Speed and Design Speed
- The span arrangement layout, in compliance with Section 12.8.6.13
- All thermal unit lengths (L_{TU}), defined as the point of thermal fixity to the next adjacent point of thermal fixity as depicted on Figure 12-22
- Locations and extents for all required alternative track solutions such as non-standard fastener configuration (NSFC), non-uniform fastener configuration (NUFC), or rail expansion joints (REJ) as described in Sections 12.6.8.5 and 12.6.8.6

The TSIDAP shall be consistent with the Seismic Design and Analyis Plan (SDAP) required per the *Seismic* chapter.

The TSIDAP shall contain detailed commentary on track-structure interaction analysis for all applicable analysis goals presented in Table 12-8, indicating the analysis software to be used, the modeling assumptions, and techniques to be employed.

Per Section 12.6.8, the TSIDAP shall include an outline of analysis modeling requirements including mass and stiffness variations, presence of continuous welded rail (CWR), and live load configurations. A detailed approach for development of model boundaries at foundations, embankments, and continuous welded rail model boundaries shall also be provided.

For dynamic structural analysis per Section 12.6.6, the TSIDAP shall summarize the approach for determination of resonance speeds, including the design iteration approach for any structures not consisting entirely of simple spans. Techniques for determining dynamic impact factors and vertical deck accelerations shall be included.

The TSIDAP shall discuss the approach for determining the rail-structure interaction forces caused by creep, shrinkage, prestressing, and temperature effects per Section 12.5.3.4. The approach for implementation of results into Strength and Service Load combinations in Table 12-4 shall be provided.

To meet RSI criteria per Section 12.6.5, the TSIDAP may include proposals for alternative track solutions (e.g., NSFC, NUFC, REJs, etc.) through the design variance approval process. The design variance shall be supplemented with a special RSI analysis per Section 12.6.8.6.

As determined by the Authority, advanced supplemental plans may be required as part of the TSIDAP. These advanced supplemental plans are to be required as part of conditional approval

RFP No.: 13-57 – Addendum No. 5 - 10/09/2014

for design variance requests or for those critical structures that depart from current service-proven design concepts. Advanced supplemental plans include, but are not limited to:

- Rail-Structure Interaction Design and Analysis Plan (RSIDAP) per Section 12.6.8.6
- Vehicle-Track-Structure Interaction Design and Analysis Plan (VTSIDAP) per Section 12.6.7

Track-structure interaction related design variances shall be submitted per the *General* chapter. The TSIDAP shall justify all track-structure interaction design variances related to track performance, rail-structure interaction, or dynamic structural response.

12.6.2 Design Parameters

The following defines the loading that shall be used for track serviceability and rail-structure interaction analyses.

12.6.2.1 Modified Cooper E-50 Loading (LLRM)

Modified Cooper E-50 loading (LLRM) shown in Figure 12-10 shall be used for track serviceability and rail-structure interaction (RSI) analyses. LLRM loading is on a per track (i.e., 2 rail) basis.

Figure 12-10: LLRM Loading

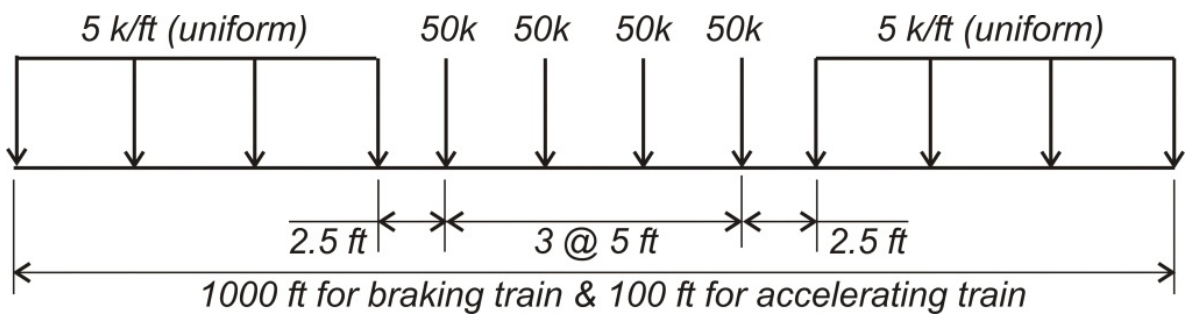

12.6.2.2 Vertical Impact Effect (I)

The vertical impact effect (I) used with Modified Cooper E-50 loading (LLRM) shall be vertical impact effect from LLRR per Section 12.5.2.2.

Dynamic vertical impact effects (I_{LLV}) caused by high-speed trainsets (LLV) shall be per Section 12.6.6.3.

12.6.2.3 Centrifugal Force (CF)

The centrifugal force (CF) used with Modified Cooper E-50 loading (LLRM) shall be determined per Section 12.5.2.3. The maximum CF calculated for LLRR and LLV shall be used, whichever governs.

RFP No.: 13-57 – Addendum No. 5 - 10/09/2014

12.6.2.4 Traction and Braking Force (LF)

The longitudinal traction and braking forces (LF) used with Modified Cooper E-50 loading (LLRM) shall be determined using the approach for LLV loading per Section 12.5.2.4-B.

12.6.3 Frequency Analysis

Frequency recommendations are established for the fundamental mode shapes of TSI-critical structures, in order to promote well-proportioned structures and minimize resonancy effects.

Recommended frequency thresholds in this section are for guidance only, and serve as a preliminary assesment of dynamic performance. As outlined by the TSI Analysis goals in Table 12-8, other more detailed evaluations of dynamic performance are required for all structures.

For each structure, the primary vertical, lateral, and torsional frequencies shall be provided on the plans. Plans shall show primary frequencies for each required analysis condition as defined in this section.

Upper and lower bound mass and stiffness assumptions shall be evaluated per the modeling requirements as given in Section 12.6.8.

12.6.3.1 Recommended Threshold of Vertical Frequency of Span

The recommended vertical frequency lower bound threshold is known to favorably resist high-speed train resonance actions. It is recommended that structures be proportioned to fall above this lower bound threshold.

Vertical frequency analysis shall consider the flexibility of superstructure, bearings, shear keys, columns, and foundations.

For vertical frequency analysis, 2 conditions shall be investigated:

- **Condition #1 –** a lower bound estimate of stiffness and upper bound estimate of mass
- **Condition #2 –** an upper bound estimate of stiffness and lower bound estimate of mass

Condition #1 will govern the lower bound threshold. Condition #2 is required for future structural assessment.

Modeling requirements for lower and upper bound estimates of stiffness and mass are given in Section 12.6.8.

The recommended threshold for the first natural frequency of vertical deflection, η_{vert} [Hz], primarily due to bending of the span is the following:

$$\eta_{vert} \geq \eta_{lower}$$

Where:

RFP No.: 13-57 – Addendum No. 5 - 10/09/2014

$\eta_{lower} = 313.09L^{-0.917}$ for $L \leq 330$ feet

where L = effective length of span (feet)

For simple spans, L shall be the span length.

For continuous spans, L shall be the following:

$$L = k\left(L_{\text{average}}\right)$$

Where:

$$L_{\text{average}} = \frac{(L_1 + L_2 + \ldots + L_n)}{n}$$ = the average span length

$n =$ the number of spans

$$k = \left(1 + \frac{n}{10}\right) \leq 1.5$$

For portal frames and closed frame bridges, L shall be the following:

- Single span: consider as 3 continuous spans, with the first and third span being the vertical length of the columns, and the second span the girder length
- Multiple spans: consider as multiple spans, with the first and last span as the vertical length of the end columns, and the interior spans the girder lengths

For spans with end diaphragms at abutments (fixed supports at abutments), the following L shall apply:

- Single span, fixed at 1 abutment: consider as 2 continuous spans, with the first span equal to 0.05 times the girder length, and the second span the girder length
- Single span, fixed at both abutments: consider as 3 continuous spans, with the first and the third span equal to 0.05 times the girder length, and the second span the girder length
- Multiple spans, fixed at 1 abutment: consider as multiple spans, with the first span equal to 0.05 times the adjacent girder length, and the interior spans the girder lengths
- Multiple spans, fixed at both abutments: consider as multiple spans, with the first and last span equal to 0.05 times the adjacent girder length, and the interior spans the girder lengths

For single arch, arch-rib, or stiffened girders of bowstrings, L shall be the half span.

Refer to Figure 12-11 for the recommended lower bound vertical frequency threshold.

RFP No.: 13-57 – Addendum No. 5 - 10/09/2014

Figure 12-11: Recommended Lower Bound Threshold of Vertical Frequency

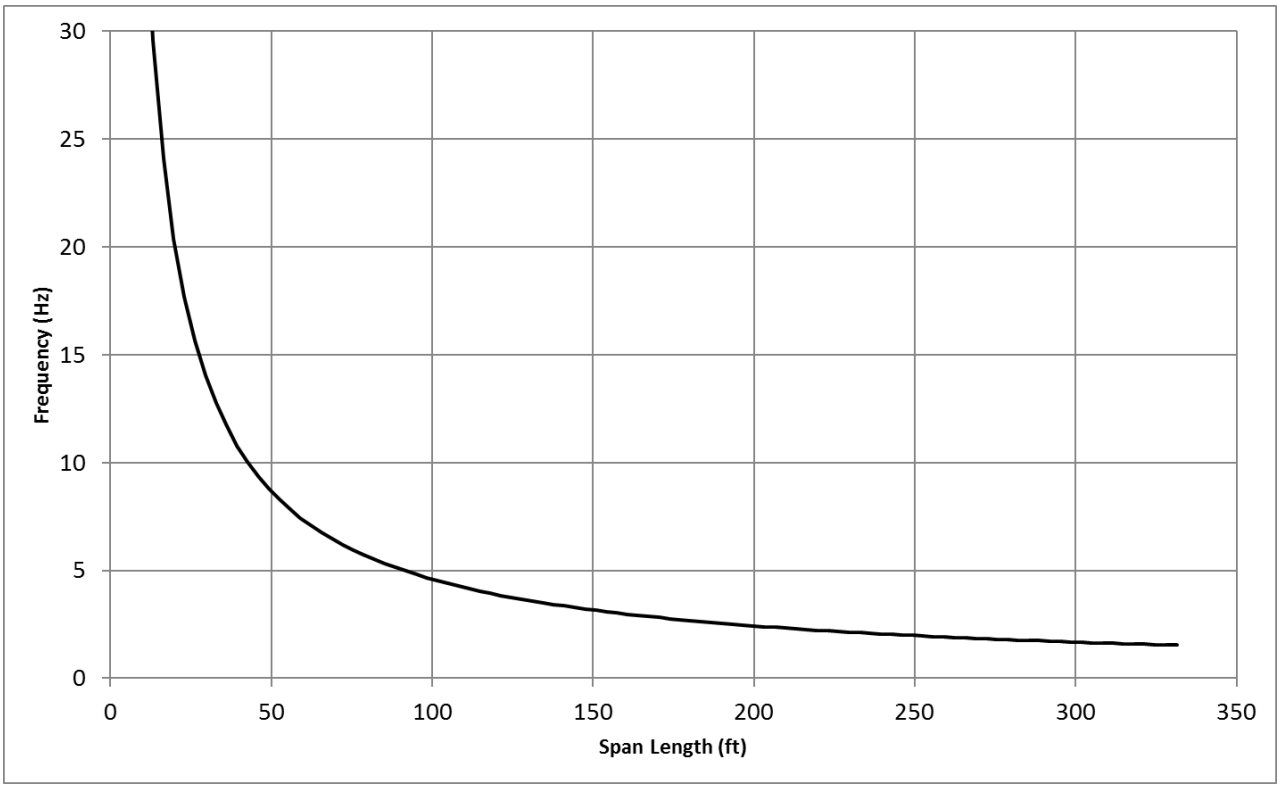

12.6.3.2 Recommended Lower Bound Torsional Frequency of Span

Recommendations for allowable torsional frequency are to proportion structures to favorably resist high-speed train actions.

Torsional frequency analysis shall consider the flexibility of superstructure, bearings, shear keys, columns, and foundations.

For torsional frequency analysis, 2 conditions shall be investigated, consistent with vertical frequency analysis:

- **Condition #1 –** a lower bound estimate of stiffness and upper bound estimate of mass
- **Condition #2 –** an upper bound estimate of stiffness and lower bound estimate of mass

Modeling requirements for lower and upper bound estimates of stiffness and mass are given in Section 12.6.8.

For Conditions #1 and #2, the first torsional frequency, $\eta_{torsion}$, of the span is recommended to be greater than 1.2 times the corresponding first natural frequency of vertical deflection, η_{vert}.

RFP No.: 13-57 – Addendum No. 5 - 10/09/2014

12.6.3.3 Recommended Lower Bound Transverse Frequency of Span

Recommendations for allowable transverse frequency are to proportion structures to favorably resist high-speed train actions.

For transverse frequency analysis, 2 conditions shall be investigated:

- **Condition #1 –** consideration of flexibility of superstructure only, excluding the flexibility of bearings, columns, and foundations, assuming supports at ends of the span are rigid.
- **Condition #2 –** consideration of flexibility of superstructure and substructure, including flexibility of bearings, columns, shear keys, and foundations.

For transverse frequency analysis, a lower bound estimate of stiffness and upper bound estimate of mass shall be used, refer to Section 12.6.8.

For Condition #1, the first natural frequency of transverse deflection, η_{trans}, of the span is recommended to be greater than 1.2 Hz.

For Condition #2, no frequency recommendation is provided but shall be recorded for future structural assessment.

12.6.4 Track Serviceability Analysis

Track serviceability analysis, using modified Cooper E-50 loading (LLRM), provides limits to allowable structural deformations. These track serviceability limits were developed for structures supporting continuous welded rail without rail expansion joints.

Deformation limits were developed for limit states based on maintenance, passenger comfort, and track safety requirements.

For track serviceability analysis, the flexibility of the superstructure and substructure (i.e., bearings, shear keys, columns, and foundations) shall be considered.

For all track serviceability analysis, in order to avoid underestimating deformations, a lower bound estimate of stiffness and an upper bound estimate of mass shall be used.

Modeling requirements are given in Section 12.6.8.

12.6.4.1 Track Serviceability Load Cases

Track serviceability loads cases shall include the following:

- Group 1a: $(LLRM + I)_1 + CF_1 + WA$
- Group 1b: $(LLRM + I)_2 + CF_2 + WA$
- Group 1c: $(LLRM + I)_m + CF_m + WA$
- Group 2: $(LLRM + I)_1 + CF_1 + WA + WS + WL_1$

RFP No.: 13-57 – Addendum No. 5 - 10/09/2014

- Group 3: $(LLRM + I)_1 + CF_1 + OBE$

Where:

$(LLRM + I)_1$ = 1 track of Modified Cooper E-50 (LLRM) plus impact

$(LLRM + I)_2$ = 2 tracks of Modified Cooper E-50 (LLRM) plus impact

$(LLRM + I)_m$ = multiple tracks per Section 12.5.2.1-D of Modified Cooper E-50 (LLRM) plus impact

I = vertical impact factor from LLRR (Section 12.5.2.2)

CF_1 = centrifugal force maximum from LLRR and LLV (one track) (Section 12.5.2.3)

CF_2 = centrifugal force maximum from LLRR and LLV (2 tracks) (Section 12.5.2.3)

CF_m = centrifugal force maximum from LLRR and LLV (multiple tracks) (Section 12.5.2.3)

WA = water loads (stream flow) (Section 12.5.1.10)

WS & WL_1 = wind on structure and wind on 1 1000′ LLRM train (Section 12.5.2.6)

OBE = Operating Basis Earthquake per *Seismic* chapter

Note that Group 1c is used for Section 12.6.4.4 only.

Static analysis and linear superposition of results shall be allowed for Groups 1a, 1b, 1c, and 2.

For determining OBE demands in Group 3, equivalent static analysis, dynamic response spectrum, or time history (linear or non-linear) analysis shall be used as per the *Seismic* chapter and the approved Seismic Design and Analysis Plan. Refer to the *Seismic* chapter for additional OBE modeling requirements.

For track serviceability analysis, non-linear modeling of RSI effects (refer to Section 12.6.8.5) is not required, but may be used. For Group 3, superposition of static (i.e., $(LLRM +I)_1 + CF_1$) and either static or dynamic OBE shall be allowed.

For Groups 1-3, the effects of CF, WA, WS, WL loads shall be included only if it is conservative to do so. These loads shall be excluded if found to counteract the deflections associated with (LLRM + I) loading.

12.6.4.2 Vertical Deflection Limits: Group 1a

Vertical deflection limits for Group 1a shall be used to address maintenance, passenger comfort, and track safety issues.

For Group 1a, the maximum static vertical deck deflection (max Δ_{1a}), with $(LLRM+I)_1$ and CF_1 in the most unfavorable position, shall not exceed the limits shown in Table 12-9.

RFP No.: 13-57 – Addendum No. 5 - 10/09/2014

Table 12-9: Vertical Deflection Limits: Group 1a

Limit	Span Length (feet)				
	L ≤ 125	L=175	L=225	L=275	L≥330
max Δ_{1a}	L/3500	L/3180	L/2870	L/2550	L/2200

Note: Limits apply for both non-ballasted and ballasted track

For span lengths not explicitly referenced in Table 12-9, use linear interpolation.

12.6.4.3 Vertical Deflection Limits: Group 1b

Vertical deflection limits for Group 1b shall be used to address maintenance, passenger comfort, and track safety issues.

For Group 1b, the maximum static vertical deck deflection (max Δ_{1b}), with $(LLRM + I)_2$ and CF_2 in the most unfavorable position, shall not exceed the limits shown in Table 12-10.

Table 12-10: Vertical Deflection Limits: Group 1b

Limit	Span Length (feet)				
	L ≤ 125	L=175	L=225	L=275	L≥330
max Δ_{1b}	L/2400	L/2090	L/1770	L/1450	L/1100

Note: Limits apply for both non-ballasted and ballasted track

For span lengths not explicitly referenced in Table 12-10, use linear interpolation.

12.6.4.4 Vertical Deflection Limits: Group 1c

Vertical deflection limits for Group 1c shall be used to provide practical guidance for structures containing 3 or more tracks operating at speeds less than 90 mph. This guidance is consistent with established European codes.

For Group 1c, where the structures support 3 or more tracks, $(LLRM + I)_m$ and CF_m loading shall be applied in a manner consistent with the case of multiple tracks on structures as described per Section 12.5.2.1-D.

The tracks selected for loading shall be those tracks that will produce the most critical design condition on the member under consideration.

For Group 1c, where structures support 3 or more tracks, the maximum static vertical deck deflection (max Δ_{1c}), with loads in the most unfavorable position, shall not exceed L/600 for all span lengths. This limit applies for both non-ballasted and ballasted track.

In the event that structures support 3 or more tracks, and 3 or more trains can be anticipated to be on the same structure simultaneously at speeds greater than 90 mph, limits defined for Group 1b shall apply. For these structures, representative love load conditions shall be developed on a case-by-case basis and defined in the TSIDAP.

RFP No.: 13-57 – Addendum No. 5 - 10/09/2014

12.6.4.5 Transverse Deflection Limits

Transverse deflection limits shall be used to address maintenance, passenger comfort, and track safety issues.

The maximum transverse deflection within the span (Δ_{trans}), as depicted on Figure 12-12, shall not exceed the limits shown in Table 12-11.

Figure 12-12: Transverse Span Deformation Limits

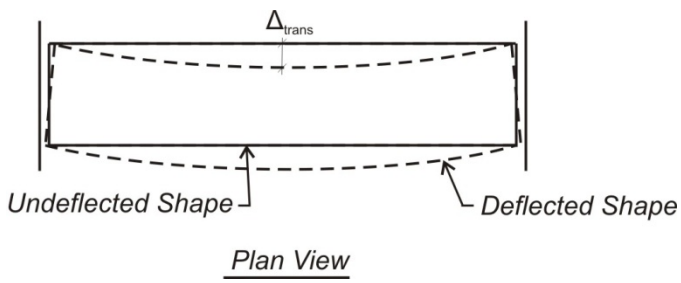

Table 12-11: Transverse Deflection Limits

Group	Δ_{trans} (feet)
1a	$L^2/(864{,}800)$
1b	$L^2/(447{,}200)$
2	$L^2/(276{,}800)$
3	$L^2/(276{,}800)$

Note: Limits apply for both non-ballasted and ballasted track

12.6.4.6 Rotation about Transverse Axis Limits

Rotation about transverse axis limits shall be used to control rail axial and bending stress, provide traffic safety (i.e., guard against wheel unloading due to abrupt angular changes in track geometry), and provide passenger comfort.

Due to rotation about the transverse axis, imposed longitudinal rail displacement is a linear function of the distance between the rail centroid and top of the bridge bearings. This imposed longitudinal displacement causes axial rail stress.

The maximum total rotation about transverse axis at deck ends (θ_t), depicted on Figure 12-13, shall be defined by the following equations:

$\theta_t = \theta$, for abutment condition

$\theta_t = \theta_1 + \theta_2$, between consecutive decks

RFP No.: 13-57 – Addendum No. 5 - 10/09/2014

The maximum relative longitudinal displacement at the level of the rail (δ_t) due to rotation about transverse axis, depicted on Figure 12-13, shall be defined by the following equations:

$\delta_t = \theta h$, for abutment condition

$\delta_t = \delta_1 + \delta_2 = \theta_1 h_1 + \theta_2 h_2$, between consecutive decks

Where:

θ_t (radians) = total rotation about transverse axis, refer to Table 12-12

δ_t (inches) = total relative displacement at the level of the rail, refer to Table 12-12

θ (radians) = rotation of the bridge bearing at abutment

θ_1 (radians) = rotation of the first bridge bearing

θ_2 (radians) = rotation of the second bridge bearing

h (inches) = the distance between the rail centroid and the top of the bridge bearing at abutment

h_1 (inches) = the distance between the rail centroid and the top of the first bridge bearing

h_2 (inches) = the distance between the rail centroid and the top of the second bridge bearing

RFP No.: 13-57 – Addendum No. 5 - 10/09/2014

Figure 12-13: Rotation about Transverse Axis at Deck Ends

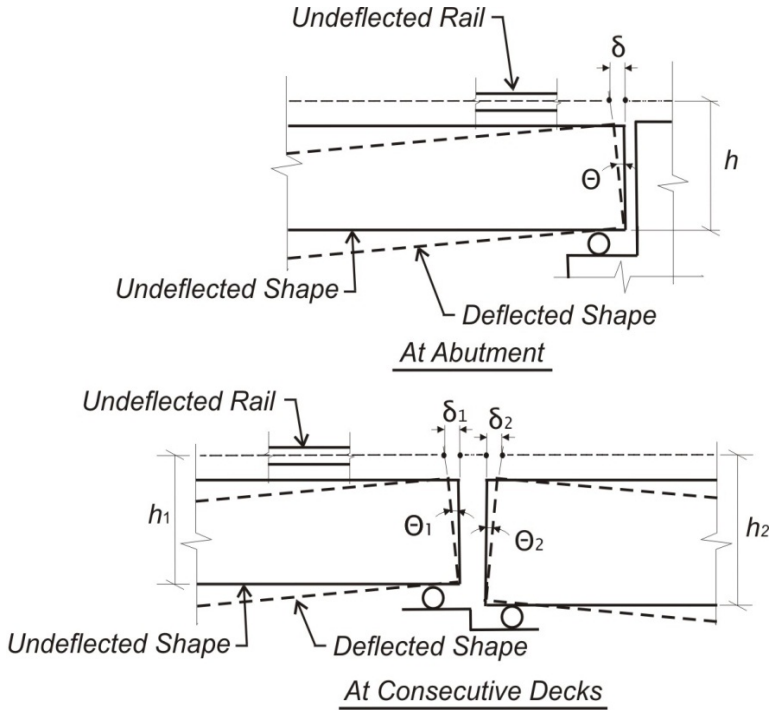

The total rotation about transverse axis (θ_t) and the corresponding maximum relative displacement at the level of the rail (δ_t) shall not exceed the limits shown in Table 12-12.

Table 12-12: Rotation about Transverse Axis and Relative Displacement at the Level of the Rail Limits

Group	θ_t (radians)	δ_t (inches)	
		Non-ballasted Track	Ballasted Track
1a	0.0012	0.33	0.33
1b	0.0017	0.33	0.33
2	0.0026	0.67	0.67
3	0.0026	0.67	0.67

12.6.4.7 Rotation about Vertical Axis Limits

Rotation about vertical axis limits shall be used to control rail axial and bending stress, provide track safety, and provide passenger comfort by limiting changes in horizontal track geometry at bridge deck ends.

Due to rotation about the vertical axis, imposed longitudinal rail displacement is a linear function of the distance between the centerline of span and the outermost rail. This imposed longitudinal displacement causes axial rail stress.

RFP No.: 13-57 – Addendum No. 5 - 10/09/2014

The maximum total rotation about vertical axis at deck ends (θ_v), depicted on Figure 12-14 shall be defined by the following equations:

$\theta_v = \theta$, for abutment condition

$\theta_v = \theta_A + \theta_B$, between consecutive decks

The maximum relative longitudinal displacement at the outermost rail (δ_v) due to rotation about vertical axis, depicted on Figure 12-15, shall be defined by the following equations:

$\delta_v = \theta w$, for abutment condition

$\delta_v = \delta_A + \delta_B = \theta_A w_A + \theta_B w_B$, between consecutive decks

Where:

θ_v (radians): total rotation about vertical axis, refer to Table 12-13

δ_v (inches): total relative displacement at the outermost rail, refer to Table 12-13

δ_A (inches): relative displacement at the outermost rail, first span

δ_B (inches): relative displacement at the outermost rail, second span

θ (radians): rotation of the bridge at abutment

θ_A (radians): rotation of the first span

θ_B (radians): rotation of the second span

w (inches): the distance between the centerline span and outermost rail centroid at abutment

w_A (inches): the distance between the centerline span and outermost rail centroid of first span

w_B (inches): the distance between the centerline span and outermost rail centroid of second span

RFP No.: 13-57 – Addendum No. 5 - 10/09/2014

Figure 12-14: Rotation about Vertical Axis at Deck Ends – Global View

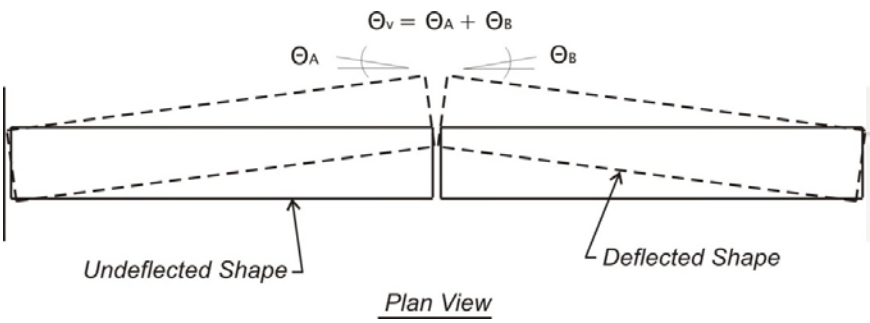

Figure 12-15: Rotation about Vertical Axis at Deck Ends – Local View

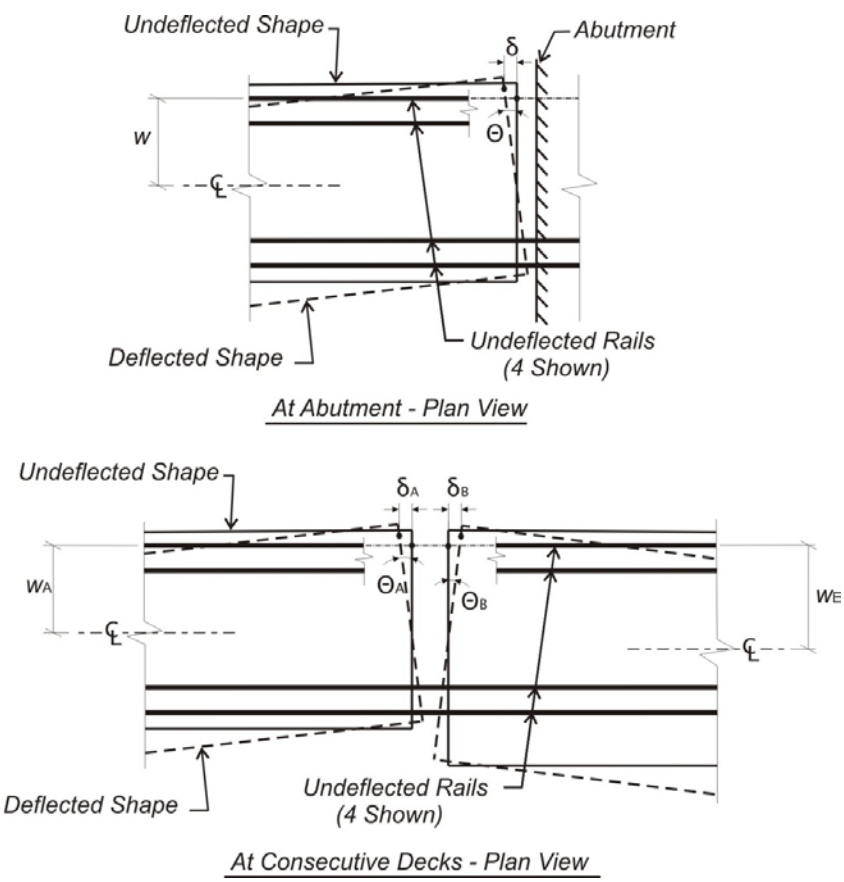

The total rotation about vertical axis (θ_v) and the corresponding maximum relative displacement at the outermost rail (δ_v) shall not exceed the limits shown in Table 12-13.

RFP No.: 13-57 – Addendum No. 5 - 10/09/2014

Table 12-13: Rotation about Vertical Axis and Relative Displacement at Outermost Rail Limits

Group	θ_v (radians)	δ_v (inches)	
		Non-ballasted Track	Ballasted Track
1a	0.0007	0.33	0.33
1b	0.0010	0.33	0.33
2	0.0021	0.67	0.67
3	0.0021	0.67	0.67

12.6.4.8 Relative Vertical Displacement at Expansion Joints – Track Serviceability

Relative vertical displacements (RVD) at structural expansion joints, δ_V^{EXP}, shall be limited in order to ensure track safety due to deck end rotation and vertical bearing deformation. Structural expansion joints between adjacent deck ends, and between deck ends and abutments shall be considered.

The relative vertical displacement at expansion joints (δ_V^{EXP}), depicted on Figure 12-16, shall not exceed the limits shown in Table 12-14.

Refer to Section 12.6.5.3 for additional RVD limits for rail-structure interaction analysis.

Figure 12-16: Relative Vertical Displacement at Expansion Joints – Track Serviceability

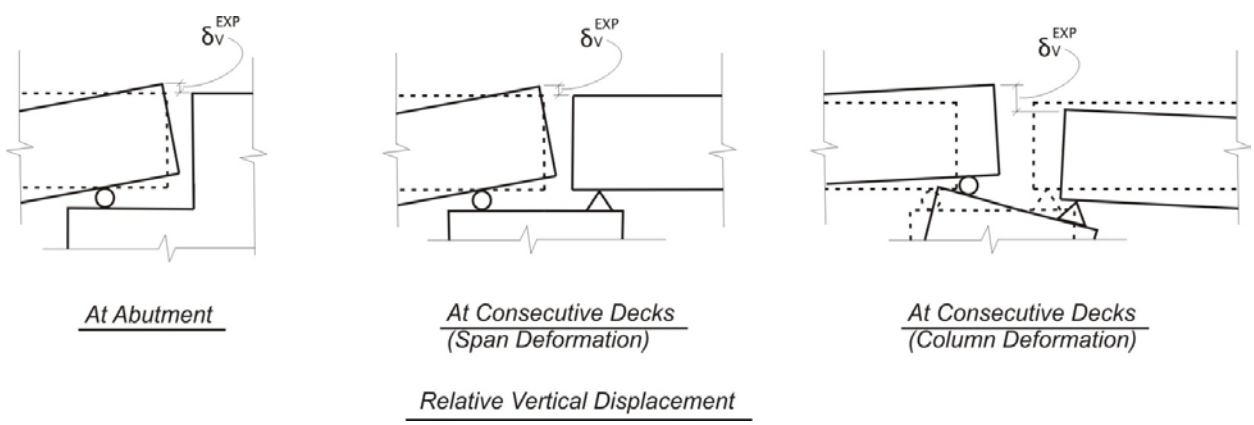

RFP No.: 13-57 – Addendum No. 5 - 10/09/2014

Table 12-14: Relative Vertical Displacement at Expansion Joints Limits – Track Serviceability

Group	δ_V^{EXP} (inch)
1a	0.25
1b	0.25
2	-
3	-

Note: Limits apply for both non-ballasted and ballasted track

12.6.4.9 Relative Transverse Displacement at Expansion Joints – Track Serviceability

Relative transverse displacements (RTD) at structural expansion joints, δ_T^{EXP}, shall be limited in order to ensure track safety subject to shear key and lateral bearing deformation. Structural expansion joints between adjacent deck ends, and between deck ends and abutments shall be considered.

The relative transverse displacement at expansion joints (δ_T^{EXP}), depicted on Figure 12-17, shall not exceed the limits shown in Table 12-15.

Refer to Section 12.6.5.4 for additional RTD limits for rail-structure interaction analysis.

Figure 12-17: Relative Transverse Displacement at Expansion Joints – Track Serviceability

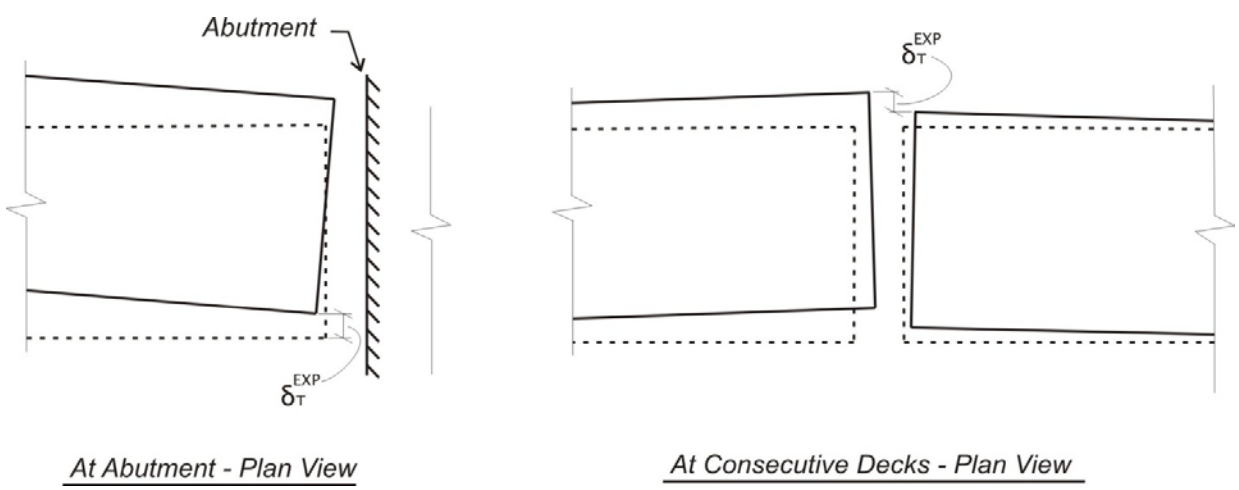

RFP No.: 13-57 – Addendum No. 5 - 10/09/2014

Table 12-15: Relative Transverse Displacement at Expansion Joints Limits – Track Serviceability

Group	δ_T^{EXP} (inch)
1a	0.08
1b	0.08
2	-
3	-

Note: Limits apply for both non-ballasted and ballasted track

12.6.4.10 Deck Twist Limits

The deck twist, t, is defined as the relative vertical deck of a given truck wheel from a plane defined by the remaining truck wheels on a track gauge of 4.71 feet over a truck length of 10 feet, refer to Figure 12-18. Deck twist limits ensure that the wheel contact points of a truck are not too far from a plane.

Figure 12-18: Deck Twist Diagram

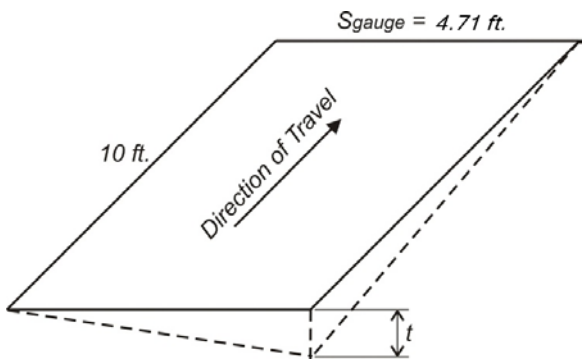

Maximum deck twist (t_{max}) below tracks shall not exceed the limits shown in Table 12-16.

Table 12-16: Deck Twist Limits

Group	t_{max} (inches)
1a	0.06
1b	0.06
2	0.17
3	0.17

Note: Limits apply for both non-ballasted and ballasted track

12.6.5 Rail-Structure Interaction Analysis

Rail-structure interaction (RSI) analysis, using modified Cooper E-50 loading (LLRM), shall be used to limit relative longitudinal, vertical, and transverse displacements at structural expansion joints, and limit axial rail stress in order to minimize the probability of rail fracture.

RFP No.: 13-57 – Addendum No. 5 - 10/09/2014

Deformation and rail stress limits were developed considering the accumulation of displacement demands and rail bending stresses under the controlling load combinations.

Details of RSI modeling requirements are given in Section 12.6.8.5.

For RSI analysis, the flexibility of the superstructure and substructure (i.e., bearings, shear keys, columns, and foundations) shall be considered.

For all RSI analysis, in order to avoid underestimating deformations and rail stress, a lower bound estimate of stiffness and an upper bound estimate of mass shall be used.

Limits on expansion joint displacement, fastener performance, and rail stress are provided in Sections 12.6.5.2 through 12.6.5.6. These limits only apply if all assumptions and modeling requirements given in Section 12.6.8.5 are valid. For structures requiring alternative assumptions or modeling techniques, an approved design variance and a special RSI analysis per Section 12.6.8.6 shall be required.

For ballasted track, structural expansion joint relative movements must be limited to prevent not only rail overstress, but also ballast fall-through, deconsolidation, and destablization. For all TSI-critical structures with ballasted track, each structural expansion joint shall be detailed for ballast retainment in order to prevent ballast fall-through, deconsolidation, or destablization at the joint. The detailing, which shall be determined by the Contractor, is dependent on the displacement demands of a given joint, the structural configuration, and type of loading being considered.

12.6.5.1 Rail-Structure Interaction Load Cases

Rail-structure interaction (RSI) load cases include the following:

- Group 4: $(LLRM + I)_2 + LF_2 \pm T_D$
- Group 5: $(LLRM + I)_1 + LF_1 \pm 0.5T_D + OBE$

Where:

$(LLRM + I)_1$ = single track of Modified Cooper E-50 (LLRM) plus vertical impact effect

$(LLRM + I)_2$ = 2 tracks of Modified Cooper E-50 (LLRM) plus vertical impact effect

I = vertical impact factor from LLRR (Section 12.5.2.2)

LF_1 = braking forces (apply braking to 1 track) for LLV loading (Section 12.5.2.4-B)

LF_2 = braking and acceleration forces (apply braking to 1 track, acceleration to the other track) for LLV loading (Section 12.5.2.4-B)

T_D = temperature differential of ±40˚F between rails and deck, applied to the superstructure

OBE = Operating Basis Earthquake per the *Seismic* chapter

RFP No.: 13-57 – Addendum No. 5 - 10/09/2014

Groups 4 and 5 are to provide relative longitudinal, vertical, and transverse displacement limits at expansion joints, and design for uplift at direct fixation fasteners. Groups 4 and 5 are also used to limit rail stress, accounting for thermal effects (i.e., $\pm T_D$).

Modeling of non-linear RSI effects, as given in Section 12.6.8.5, shall be required to give realistic demands. Experience has shown that linear modeling of RSI is overly conservative.

For Group 5, non-linear time-history OBE analysis (i.e., non-linear RSI) shall be used for design. $(LLRM + I)_1 + LF_1$ may be idealized as a set of stationary load vectors placed upon the structure in the most unfavorable position. Refer to the *Seismic* chapter for additional OBE modeling requirements.

12.6.5.2 Relative Longitudinal Displacement at Expansion Joints

Relative longitudinal displacements (RLD) at structural expansion joints, δ_L^{EXP}, shall be limited in order to control rail axial stress. Structural expansion joints between adjacent deck ends, and between deck ends and abutments shall be considered.

RLD at structural expansion joints, δ_L^{EXP}, has components due to both structural translation and structural rotation. For structural rotation, RLD is a function of distance from center of structure rotation to rail centroid. Therefore, δ_L^{EXP} shall be monitored relative to the original rail centroid location, and consist of structural movement alone.

δ_L^{EXP} consists of separate components:

- δ_{LF} = component due to acceleration and braking only, refer to Figure 12-19
- δ_{LLRM+I} = component due to vertical train plus impact loads only, refer to Figure 12-20
- δ_{OBE} = component due to OBE only (refer to Figure 12-21), comprising:
  - $\delta_{OBE(L)}$ = longitudinal displacement subcomponent due to OBE
  - $\delta_{OBE(V)}$ = rotation about vertical axis subcomponent due to OBE
  - $\delta_{OBE(T)}$ = rotation about transverse axis subcomponent due to OBE
  - $\delta_{OBE} = \delta_{OBE(L)} + \delta_{OBE(V)} + \delta_{OBE(T)}$
- δ_{TD} = component due to temperature differential ($\pm T_D$) between superstructure and rail

RFP No.: 13-57 – Addendum No. 5 - 10/09/2014

Figure 12-19: δ_{LF} Definition

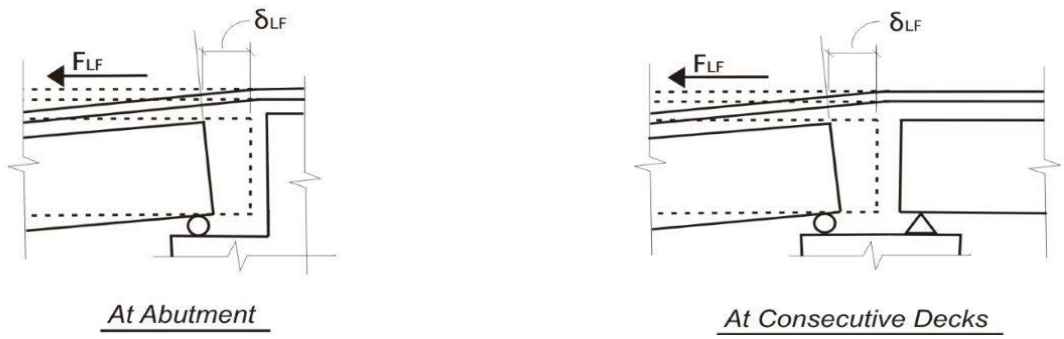

Figure 12-20: δ_{LLRM+I} Definition

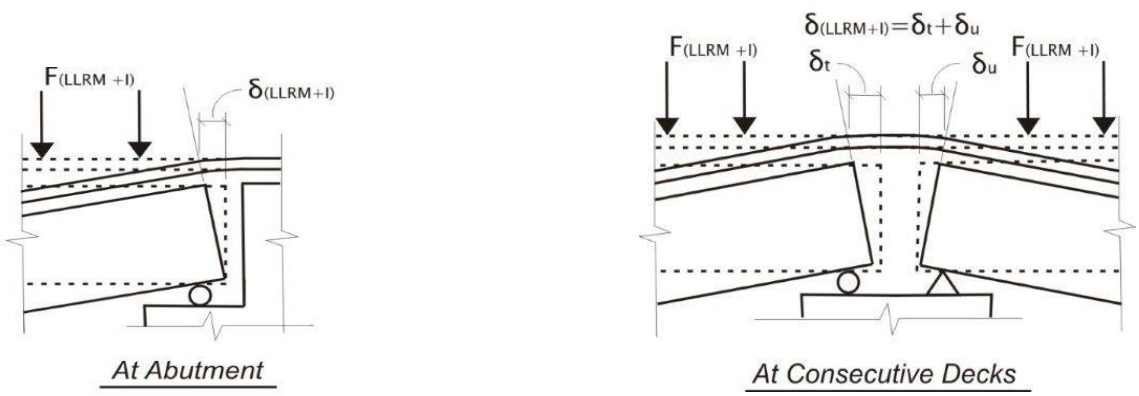

RFP No.: 13-57 – Addendum No. 5 - 10/09/2014

Figure 12-21: δ_{OBE} Definition

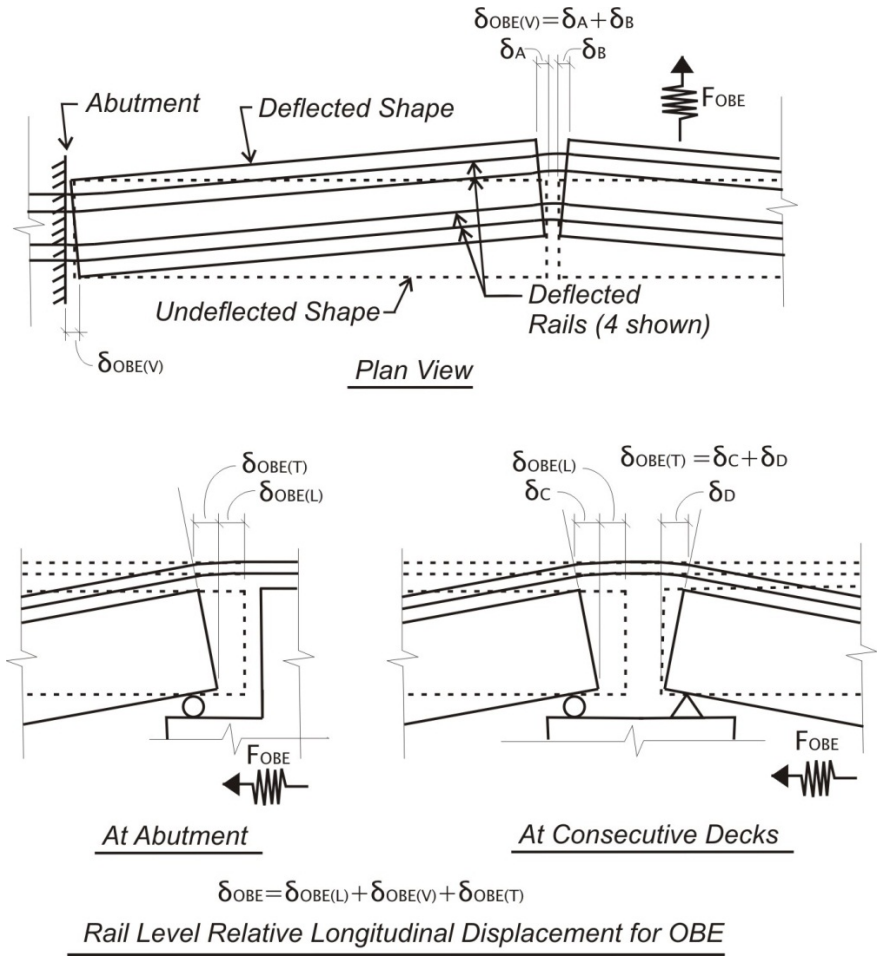

The RLD at expansion joints measured relative to the original rail centroid location (δ_L^{EXP}) shall not exceed the limits shown in Table 12-17.

Note that in order to prevent having separate load cases for relative displacement and rail stress design, the expected temperature differential demands are added to the displacement limits.

The temperature differential demands are dependent on the structural thermal unit (L_{TU}), which is defined as the point from fixed point of thermal expansion to the next adjacent fixed point of thermal expansion as depicted on Table 12-22. The maximum L_{TU} shall not exceed 330 feet without an approved design variance and special RSI analysis per Section 12.6.8.6.

RFP No.: 13-57 – Addendum No. 5 - 10/09/2014

Figure 12-22: Structural Thermal Unit (L_{TU}) Definition

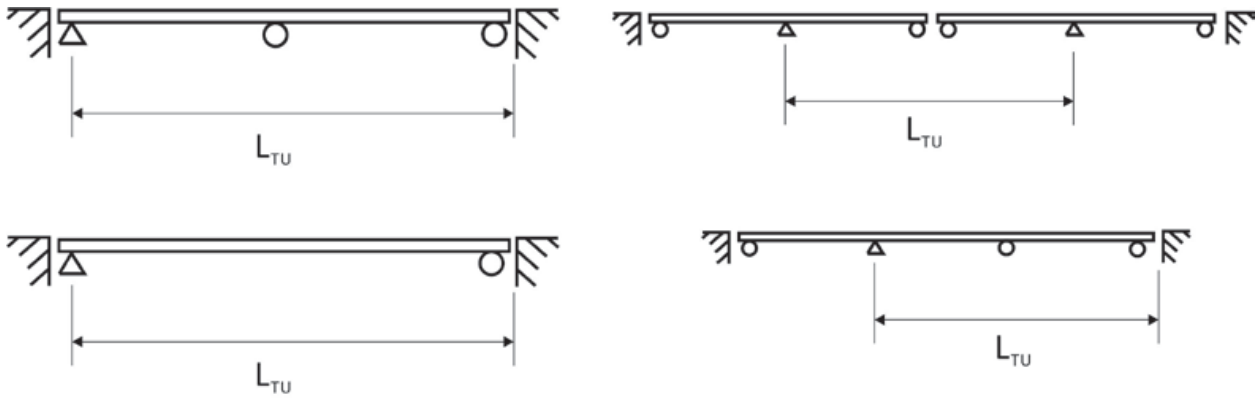

Table 12-17: Relative Longitudinal Displacement at Expansion Joints Limits

Group	δ_L^{EXP} (inch)	
	Non-ballasted Track	Ballasted Track
4	$0.70 + \delta_{TD,Expected}$	$0.50 + \delta_{TD,Expected}$
5	$2.33 + 0.5\delta_{TD,Expected}$	$2.25 + 0.5\delta_{TD,Expected}$

Where:

$\delta_{TD,Expected}$ = expected RLD measured relative to the original rail centroid location due to T_D loading per Section 12.6.5.1. For most structures, $\delta_{TD,Expected}$ can be approximated by:

$$\delta_{TD,Expected} = \alpha(\Delta T)L_{TU}$$

Where:

α = coefficient of thermal expansion for the superstructure

ΔT = 40°F temperature differential per Section 12.6.5.1. (ΔT always positive for calculation of $\delta_{TD,Expected}$)

L_{TU} = length of structural thermal unit at a given expansion joint, refer to Figure 12-22.

For any structure that $\delta_{TD,Expected}$ cannot be approximated with the above equation, $\delta_{TD,Expected}$ shall be verified by monitoring RSI models subject to T_D loading per Section 12.6.5.1. When a special RSI analysis per Section 12.6.8.6 is required, a detailed temperature analysis shall be required to justify the determination of $\delta_{TD,Expected}$.

RFP No.: 13-57 – Addendum No. 5 - 10/09/2014

12.6.5.3 Relative Vertical Displacement at Expansion Joints

Relative vertical displacement (RVD) at structural expansion joints, δ_V^{EXP}, shall be limited in order to control rail bending stress. Structural expansion joints between adjacent deck ends, and between deck ends and abutments shall be considered.

The flexibility of the superstructure and substructure (i.e., bearings, shear keys, columns, and foundations) shall be considered when calculating RVD.

The relative vertical displacement at expansion joints (δ_V^{EXP}), depicted on Figure 12-23 shall not exceed the limits shown in Table 12-18.

Refer to Section 12.6.4.8 for additional RVD limits for track serviceability analysis.

Figure 12-23: Relative Vertical Displacement at Expansion Joints

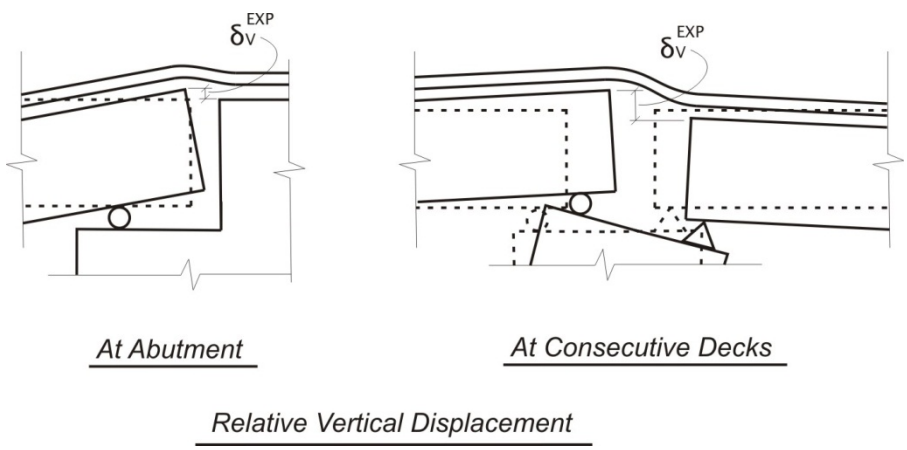

Table 12-18: Relative Vertical Displacement at Expansion Joints Limits

Group	δ_V^{EXP} (inch)	
	Non-ballasted Track	Ballasted Track
4	0.25	0.50
5	0.50	0.75

12.6.5.4 Relative Transverse Displacement at Expansion Joints

Relative transverse displacement (RTD) at structural expansion joints, δ_T^{EXP}, shall be limited in order to control rail bending stress. Structural expansion joints between adjacent deck ends, and between deck ends and abutments shall be considered.

The relative transverse displacement at expansion joints (δ_T^{EXP}), depicted on Figure 12-24, shall not exceed the limits shown in Table 12-19.

RFP No.: 13-57 – Addendum No. 5 - 10/09/2014

Refer to Section 12.6.4.9 for additional RTD limits for track serviceability analysis.

Figure 12-24: Relative Transverse Displacement at Expansion Joints

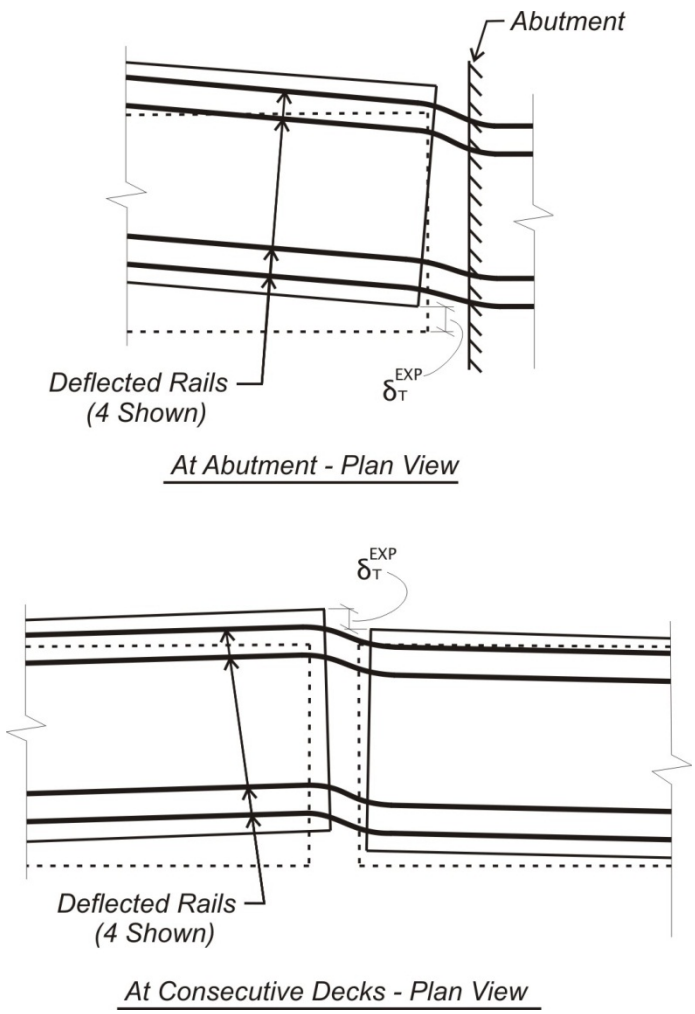

Table 12-19: Relative Transverse Displacement at Expansion Joints Limits

Group	δ_T^{EXP} (inch)	
	Non-ballasted Track	Ballasted Track
4	0.08	0.16
5	0.16	0.24

12.6.5.5 Uplift at Direct Fixation Fasteners for Non-Ballasted Track

For nonballasted track under Groups 4 and 5, the fastener uplift anchorage capacity shall be designed to the factors of safety shown in Table 12-20.

RFP No.: 13-57 – Addendum No. 5 - 10/09/2014

Table 12-20: Minimum Factor of Safety for Uplift on Direct Fixation Fasteners

Group	Minimum Factor of Safety
4	2.0
5	1.33

Note: Limits apply for non-ballasted track only

Special fasteners and/or fastener anchorages may be required adjacent to structural expansion joints (SEJ) due to increased uplift demands. For each SEJ, the contractor shall identify specific fastener and anchorage details that meet the Group 4 and 5 joint demands determined from RSI analysis. Any modifications to typical fastener or anchorage details shall be defined in the TSIDAP with locations identified on the plans. Factors of safety shown in Table 12-20 shall apply.

12.6.5.6 Axial Rail Stress

Axial rail stress limits were developed considering the total allowable rail stress minus rail bending stress due to vertical wheel loads, relative displacements at structural expansion joints, and minus initial axial rail stress due to rail temperature and preheat during installation (refer to the *Trackwork* chapter).

The axial rail stress limits pertain to axial only rail stresses generated by RSI.

Axial rail stress limits (σ_{rail}) for rails on TSI-critical structures and adjacent abutment or at-grade regions shall be per Table 12-21.

Table 12-21: Axial Rail Stress Limits

Group	Range of σ_{rail}	
	Non-ballasted Track	Ballasted Track
4	-14 ksi ≤ σ_{rail} ≤ +14 ksi	-12 ksi ≤ σ_{rail} ≤ +14 ksi
5	-23 ksi ≤ σ_{rail} ≤ +23 ksi	-21 ksi ≤ σ_{rail} ≤ +23 ksi

Note: Compression = Negative (-), Tension = Positive (+)

12.6.6 Dynamic Structural Analysis

Dynamic structural analysis of high-speed train passage (LLV) is required in order to determine resonancy induced dynamic impact (I_{LLV}) effects, and limit vertical deck accelerations. Maximum dynamic amplification occurs at resonance, when the structure's natural vertical frequency coincides with the frequency of axle loading.

For all dynamic structural analysis of high-speed train passage (LLV) the flexibility of the superstructure and substructure (i.e., bearings, shear keys, columns, and foundations) shall be considered.

RFP No.: 13-57 – Addendum No. 5 - 10/09/2014

To avoid over or underestimating the resonant speeds, 2 conditions must be investigated:

- **Condition #1 –** lower bound estimate of stiffness and upper bound estimate of mass
- **Condition #2 –** upper bound estimate of stiffness and lower bound estimate of mass

Modeling requirements for lower and upper bound estimates of stiffness and mass are given in Section 12.6.8.

12.6.6.1 High-Speed Train Loading (LLV)

Dynamic structural analysis of high-speed train passage shall consider representative trainsets (LLV), idealized as a series of moving vertical loads at specified axle and truck spacings. Modeling of the train suspension system shall not be required for dynamic structural analysis.

Five trainsets, depicted on Figure 12-25 to Figure 12-29 collectively form LLV.

Dynamic structural analysis using all 5 trainsets shall be performed, subject to the suite of speeds given in Section 12.6.6.2.

Figure 12-25: Type 1

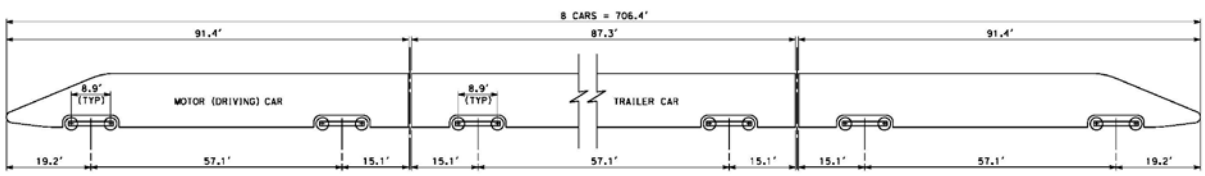

Maximum Axle Load = 18.7 tons Train Weight (Empty) = 509 tons

Figure 12-26: Type 2

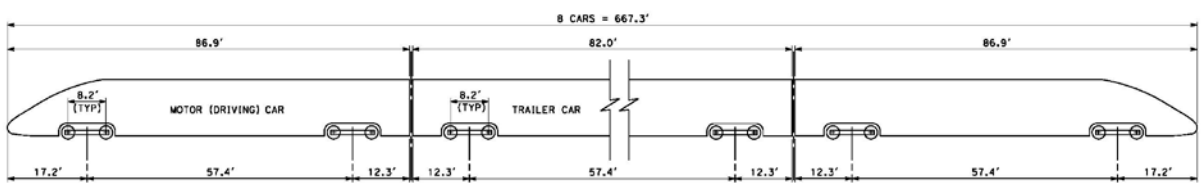

Maximum Axle Load = 16.5 tons Train Weight (Empty) = 491 tons

RFP No.: 13-57 – Addendum No. 5 - 10/09/2014

Figure 12-27: Type 3

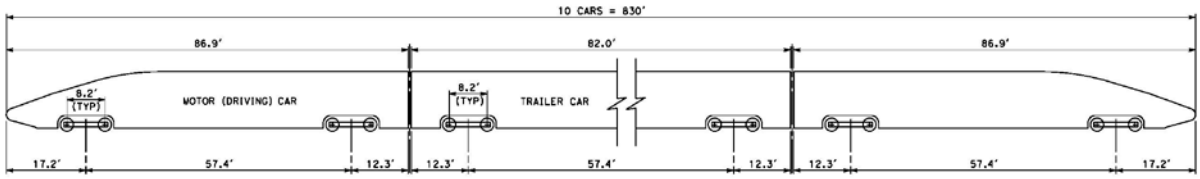

Maximum Axle Load = 12.4 tons Train Weight (Empty) = 457 tons

Figure 12-28: Type 4

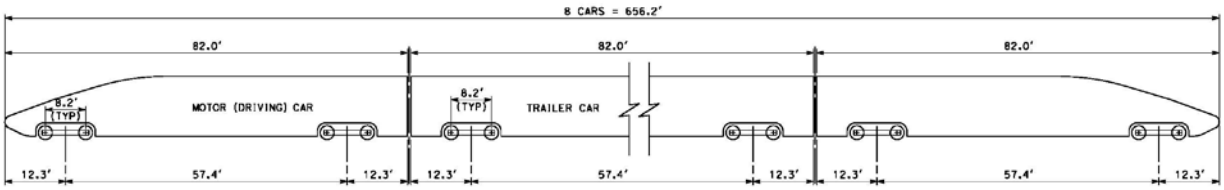

Maximum Axle Load = 15.4 tons Train Weight (Empty) = 444 tons

Figure 12-29: Type 5

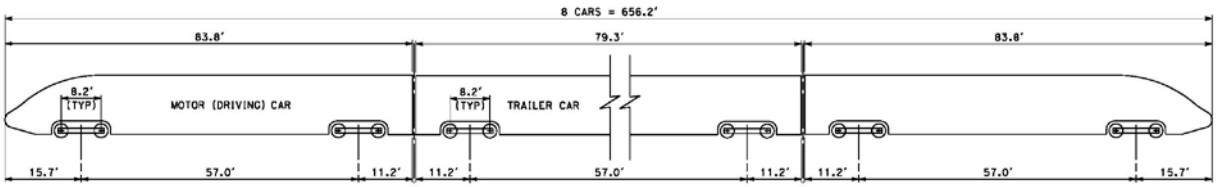

Maximum Axle Load = 18.7 tons Train Weight (Empty) = 493 tons

12.6.6.2 Train Speeds

Dynamic structural analysis using all 5 trainsets shall be performed, subject to the following suite of speeds:

- Speeds from 90 mph up to maximum speed of 1.2 times the line design speed (or 250 mph, whichever is less), by increment of 10 mph
- Smaller increments of 5 mph for ±20 mph on each side of the first 2 resonant speeds

A. <u>Resonant Speeds</u>

For simple spans, resonant speeds may be estimated by:

RFP No.: 13-57 – Addendum No. 5 - 10/09/2014

$V_i = n_o d/i$,

Where:

V_i = resonant speeds,

n_o = first natural frequency of vertical deflection

d = characteristic wheel spacing, refer to Figure 12-30

i = resonant mode numbers (e.g., 1, 2, 3, 4, …)

For structures not consisting of simple spans, resonant speeds shall be determined by the dynamic structural analysis model.

Figure 12-30: Characteristic Wheel Spacing, d

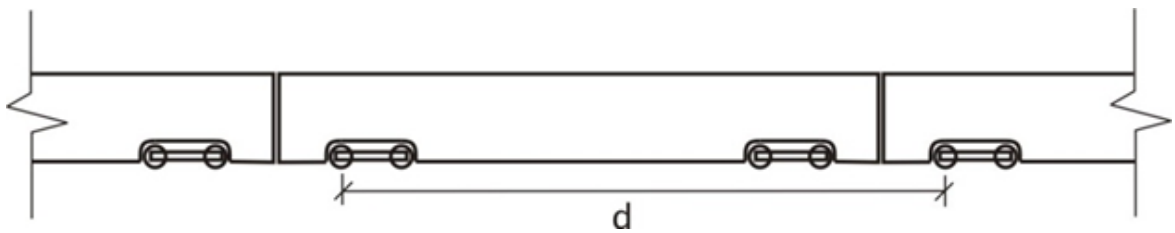

B. Cancellation Speeds

In addition to resonance, cancellation effects also contribute to the overall dynamic response of elevated structures. For simple spans, cancellation speeds may be estimated by:

$$V_i = \frac{2n_o L}{2i-1},$$

Where:

V_i = cancellation speeds,

n_o = first natural frequency of vertical deflection

L = simple span length

i = cancellation mode numbers (e.g., 1, 2, 3, 4, …)

When L/d = 1.5, an optimal design condition exists for which the first mode of resonance aligns with the second mode of cancellation. In this condition, the primary dynamic residual response generated by repeated axle loads can be suppressed. Due to uncertainties associated with the service life of the structure, it may be unrealistic to design a given structure solely for a single characteristic wheel spacing. Nevertheless, optimal span lengths for potential trainsets shall be considered for design.

RFP No.: 13-57 – Addendum No. 5 - 10/09/2014

For non-simple span structures, the interaction between resonant and cancellation speeds may not be readily apparent and shall be investigated by a more detailed dynamic structural analysis.

12.6.6.3 Dynamic Vertical Impact Effecs

For the high-speed trainsets (LLV), the dynamic model shall be used to determine the dynamic impact effect (I_{LLV}).

To determine (I_{LLV}), the maximum dynamic response value, ξ_{dyn} shall be found for each structural response for single track loading (LLV) over the range of speeds given in Section 12.6.6.2.

Compared against the corresponding static response value, ξ_{stat}, the dynamic impact effect is:

$$I_{LLV} = \max\left[\frac{\xi_{dyn}}{\xi_{stat}}\right]$$

12.6.6.4 Vertical Deck Acceleration

Vertical accelerations of TSI-critical structure decks are limited to avoid unsafe wheel-rail contact, and also to minimize passenger discomfort.

When evaluating vertical deck accelerations, an upper bound estimate of stiffness and lower bound estimate of mass shall be considered.

Vertical acceleration of TSI-critical structure decks shall be found for single track loading (LLV) over the range of train speeds given in Section 12.6.6.2. The vertical deck acceleration shall be monitored at the centerline of the loaded track.

The vertical deck acceleration shall be limited to:

- +/- 16.1 ft/s^2 (0.50g) for non-ballasted track
- +/- 11.3 ft/s^2 (0.35g) for ballasted track

For acceleration limits to be experienced within the train car body, refer to Section 12.6.7.

12.6.7 Dynamic Vehicle-Track-Structure Interaction Analysis

For typical structures, limiting the span deflections, relative displacements between spans, expansion joint widths, rail stress, and deck acceleration provides sufficient guidance for track safety and passenger comfort.

A design variance shall be required for TSI-critical structures exceeding any deformation, rail stress, or acceleration limits within Sections 12.6.4, 12.6.5, and 12.6.6, or TSI-critical structures that depart from current service proven design concepts as determined by the Authority during approval of the Track-Structure Interaction Design and Analysis Plan (TSIDAP) per Section

RFP No.: 13-57 – Addendum No. 5 - 10/09/2014

12.6.1. A dynamic vehicle-track-structure interaction (VTSI) analysis, which considers the interaction between the vehicle, track and structure, may be required as part of conditional approval for the design variance.

When a dynamic VTSI analysis is required, the Contractor shall submit a Vehicle-Track-Structure Interaction Design and Analysis Plan (VTSIDAP) for approval by the Authority. The VTSIDAP shall provide the following detailed information regarding the analysis approach:

- The vehicle models to be used – including mass, stiffness, and damping characteristics of the wheels, trucks, suspension, and body
- The number of trainsets, speeds, and number of cars used for the purpose of analysis
- The approach to be used to generate random track irregularities consistent for the appropriate FRA Track class
- The structural definition, including model boundaries and representation of adjacent at-grade track
- The track properties considered, including rail section, fastener, and ballast properties as applicable
- The method used to couple the dynamic train system with the dynamic structure system, including modeling of wheel-rail contact
- The method used to monitor wheel-rail contact forces and carbody accelerations

Additional information for VTSI analysis may be required, as determined by the Authority.

12.6.7.1 Dynamic Vehicle-Track-Structure Interaction Analysis Requirements

For dynamic VTSI, both a dynamic structural model and dynamic trainset models shall be used. The interaction of the structure and trainset models shall be considered in either a coupled or iterative method.

Details of structural modeling requirements are given in Section 12.6.8.

Due to uncertainty of trainset selection, multiple trainset models shall be proposed for dynamic VTSI. Each of the dynamic trainset models shall be consistent with characteristic loading of LLV trainsets as defined in Section 12.6.6.1, and consider the mass, stiffness, and damping characteristics of the wheels, trucks, suspension, and body.

It is known that vehicle response is highly sensitive to track irregularities. For dynamic VTSI analysis, random track irregularities shall be considered directly within the VTSI model. Random theoretical irregularities shall be developed for FRA Track Classes using a power spectral density function that may be distributed into the time domain by applying the spectral representation method.

RFP No.: 13-57 – Addendum No. 5 - 10/09/2014

Dynamic VTSI analysis shall consider a series of speeds ranging from a minimum of 90 mph up to maximum speed of 1.2 times the line design speed (or 250 mph, whichever is less). Refer to Section 12.6.6.2 for train speed increment requirements.

Dynamic VTSI analysis shall consider single track (i.e., 1 trainset) loading only.

For the dynamic VTSI analysis, a sufficient number of cars shall be used to produce maximum load effects in the longest span of the structure. In addition, a sufficient number of spans within a long aerial structure shall be considered to initiate any resonance effects in the train suspension.

12.6.7.2 Dynamic Track Safety Criteria

Track safety depends primarily upon the contact forces between the rail and the wheel. The ratio of lateral to vertical forces (L/V ratio) is typically used as the primary indicator of derailment. In addition, the magnitude of lateral and vertical forces imparted by the wheel to the rail must be controlled.

During dynamic VTSI analysis, the dynamic track safety limits shown in Table 12-22 shall be satisfied for all trainsets and speeds.

Table 12-22: Dynamic Track Safety Limits

Parameter	Dynamic Track Safety Criteria
Maximum Single Wheel L/V Ratio	$(L/V)_{wheel} \leq 0.80$
Maximum Truck Side L/V Ratio	$(L/V)_{truck\ side} \leq 0.6$
Minimum Single Wheel Dynamic Vertical Load	$V_{wheel,dynamic} \geq 0.15*V_{wheel,static}$
Maximum Net Axle Dynamic Lateral Force	$L_{axle,dynamic} \leq 0.40*V_{axle,static} + 5$ kips

Where:

$(L/V)_{wheel}$ = Ratio of lateral forces to vertical forces exerted by a single wheel on the rail

$(L/V)_{truck\ side}$ = Ratio of lateral forces to vertical forces exerted by any 1 side of a truck on the rail

$V_{wheel,dynamic}$ = Dynamic vertical wheel reaction

$V_{wheel,static}$ = Static vertical wheel load

$L_{axle,dynamic}$ = Dynamic lateral axle reaction

$V_{axle,static}$ = Static vertical axle load

12.6.7.3 Dynamic Passenger Comfort Criteria

Passenger comfort depends primarily upon the accelerations experienced by passengers within the train car body during travel on and off TSI-critical structures.

RFP No.: 13-57 – Addendum No. 5 - 10/09/2014

During dynamic VTSI analysis, the lateral acceleration within the car body is limited to +/- 1.6 ft/s^2 (0.05 g) for all trainsets and speeds.

The vertical acceleration within the car body is limited to +/- 1.45 ft/s^2 (0.045 g) for any trainset across the required speed range.

12.6.8 Modeling Requirements

The following modeling requirements for static and dynamic analysis of high-speed train TSI-critical structures shall be used for project-wide consistency.

12.6.8.1 Model Geometry and Boundary Conditions

The model shall represent the TSI-critical structure span lengths, vertical and horizontal geometries, column heights, mass and stiffness distribution, bearings, shear keys, column or abutment supports, and foundation conditions.

For isolated TSI-critical structures, with no adjacent structures, the model shall represent the entire structure including abutment support conditions.

For TSI-critical structures with repetitive simply supported spans, the model shall have a minimum of 20 spans. Boundary conditions at the ends of the model shall represent the stiffness of any adjacent spans or frames.

For TSI-critical structures with repetitive continuous span frames (i.e., each frame consists of multiple spans with moment transfer between the deck and columns), the model shall have a minimum of 5 frames. Boundary conditions at the ends of the model shall represent the stiffness of adjacent spans or frames.

Soil springs at the foundations shall be developed based on reports required in the *Geotechnical* chapter.

For modeling of earthen embankments or cuts at bridge approaches, refer to Section 12.6.8.7.

12.6.8.2 Model Stiffness

Structural elements shall be represented by the appropriate sectional properties and material properties.

For frequency analysis, dynamic structural analysis, and dynamic VTSI analysis, both upper and lower bound estimates of stiffness shall be considered.

For track serviceability and RSI analysis, a lower bound estimate of stiffness shall be considered.

For steel superstructure and steel column members, the following shall apply:

- Upper bound stiffness: full steel cross sectional properties, and expected material properties (larger than nominal specified per AASHTO LRFD BDS with California Amendments) shall be used.

RFP No.: 13-57 – Addendum No. 5 - 10/09/2014

- Lower bound stiffness: reduced steel cross sectional properties considering shear lag effects if necessary, and nominal material properties shall be used.

For reinforced, pre-stressed, and post-tensioned concrete superstructure members, the following shall apply:

- Upper bound stiffness: full gross bending inertia, I_g, and modulus of elasticity corresponding to expected material properties (1.3x nominal) per CSDC shall be used. Consideration shall be made for composite action of the superstructure with non-ballasted track, and barriers or derailment walls when determining upper bound bending inertias.
- Lower bound stiffness: effective bending inertia, I_{eff}, per CSDC, and modulus of elasticity corresponding to nominal material properties shall be used.

For concrete column members, the following shall apply:

- Upper bound stiffness: full gross bending inertia, I_g, and modulus of elasticity corresponding to expected material properties (1.3x nominal) per CSDC shall be used.
- Lower bound stiffness: cracked bending inertia, I_{cr}, per CSDC, and modulus of elasticity corresponding to nominal material properties shall be used.

As an alternative to using I_{cr} per CSDC, an effective bending inertia, I_{eff}, which considers the maximum moment demand, M_a, and the cracking moment, M_{cr}, may be used in accordance with AASHTO LRFD BDS with California Amendments. Also, a moment-curvature representation of the column stiffness may be used.

12.6.8.3 Model Mass

For frequency analysis, dynamic structural analysis, and dynamic VTSI analysis, both upper and lower bound estimates of bridge mass shall be considered.

For track serviceability and RSI analysis, an upper bound estimate of bridge mass shall be considered.

For structural dead load (DC) mass, the material unit weights per Section 12.5 shall be used as the basis for design. For the upper bound mass estimate, unit weights shall be increased by a minimum of 5 percent. For the lower bound mass estimate, unit weights shall be reduced by a minimum of 5 percent.

For superimposed dead load (DW), upper and lower bound mass estimates shall be considered on case by case basis with a minimum of +/-5 percent.

12.6.8.4 Model Damping

When performing OBE time history analyses for track serviceability and rail-structure interaction analysis, damping shall be used (per the *Seismic* chapter).

RFP No.: 13-57 – Addendum No. 5 - 10/09/2014

When performing dynamic structural analysis, the peak structural response at resonant speed is highly dependent upon damping. The damping values in Table 12-23 shall be used.

Table 12-23: Damping Values for Dynamic Model

Bridge Type	Percent of Critical Damping
Steel and composite	0.5%
Pre-stressed, post-tensioned concrete	1.0%
Reinforced concrete	1.5%

The damping may be increased for shorter spans (< 65 feet), with supporting evidence to be provided by the Contractor as part of the TSIDAP per Section 12.6.1.

When performing dynamic structural analysis using actual LLV, soil damping shall be considered in accordance with the geotechnical reports described in the *Geotechnical* chapter.

12.6.8.5 Modeling of Rail-Structure Interaction

Longitudinal actions produce longitudinal forces in continuous rails. These forces are distributed to the TSI-critical structures in accordance with the relative stiffness of the track and fasteners, articulation of the structural system, and stiffness of the substructure. Refer to Figure 12-31 for a schematic rail-structure interaction model.

Figure 12-31: Rail-Structure Interaction Model

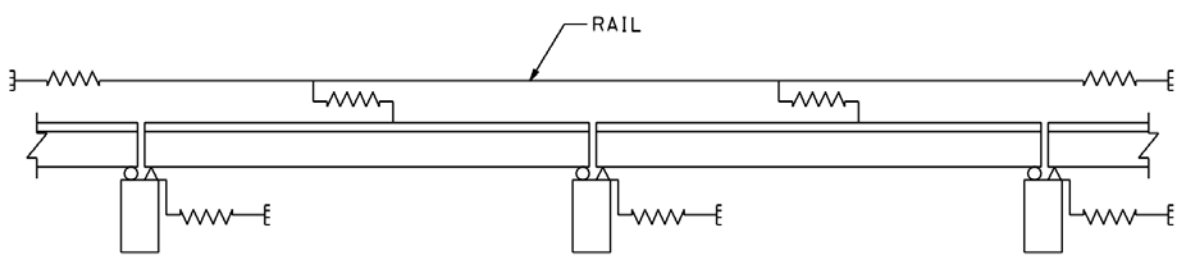

Rail-structure interaction (RSI) may govern the following:

- Location and distance between bridge expansion joints
- Stiffness of the bridge superstructure
- Stiffness of the supporting columns and foundations

RSI shall be performed for all structures using either static or dynamic models. In addition, the model shall, at a minimum, include the axial stiffness of the rails appropriately located upon the superstructure, and longitudinal bi-linear coupling springs between the track and superstructure over the length of the model.

RFP No.: 13-57 – Addendum No. 5 - 10/09/2014

For purposes of RSI analysis, the continuous welded rail section properties shall be per Table 12-24.

The rail section used for analysis shall not be construed as a requirement for track design or track construction. Refer to the *Trackwork* chapter for rail section requirements.

Table 12-24: Rail Section Properties for RSI Analysis

Property	Metric units	US units
Mass per meter:	60.21 kg/m	121.4 lb/yd
Cross-sectional area:	76.70 cm2	11.89 in2
Moment of inertia x-x axis:	3038.3 cm4	73.00 in4
Section modulus – Head:	333.6 cm3	20.36 in3
Section modulus – Base:	375.5 cm 3	22.91 in3
Moment of inertia y-y axis:	512.3 cm 4	12.31 in4
Section modulus y-y axis:	68.3 cm 3	4.17 in3

The track type (non-ballasted or ballasted) and corresponding fasteners for analysis are to be determined as part of the approved TSIDAP per Section 12.6.1.

Fastener restraint is non-linear, allowing slippage of the rail relative to the track support structure. Bi-linear coupling springs shall represent non-ballasted track with direct fixation fasteners (refer to Figure 12-32) or ballasted track with concrete ties and elastic fasteners (refer to Figure 12-33) between the rails and superstructure on a per track (i.e., 2 rail) basis. The non-ballasted relationship represents a pair of fasteners each with 1.54 kip (6.85 kN) unloaded longitudinal restraint at 27-inch spacing. The ballasted relationship represents a pair of fasteners on a concrete tie each with 1.54 kip (6.85 kN) unloaded longitudinal restraint at 27-inch tie spacing. In each case, the longitudinal restraint is 1.37 k (unloaded) per foot of track and 2.7 k (loaded) per foot of track. The yield displacement varies from 0.02″ (non-ballasted) to 0.08″ (ballasted).

RFP No.: 13-57 – Addendum No. 5 - 10/09/2014

Figure 12-32: Non-Ballasted Track with Direct Fixation Fasteners: Bi-linear Coupling Springs

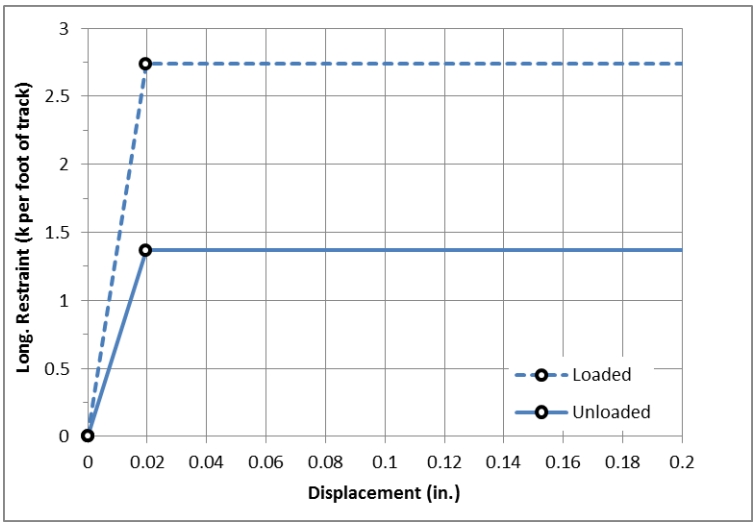

Figure 12-33: Ballasted Track with Concrete Ties and Elastic Fasteners: Bi-linear Coupling Springs

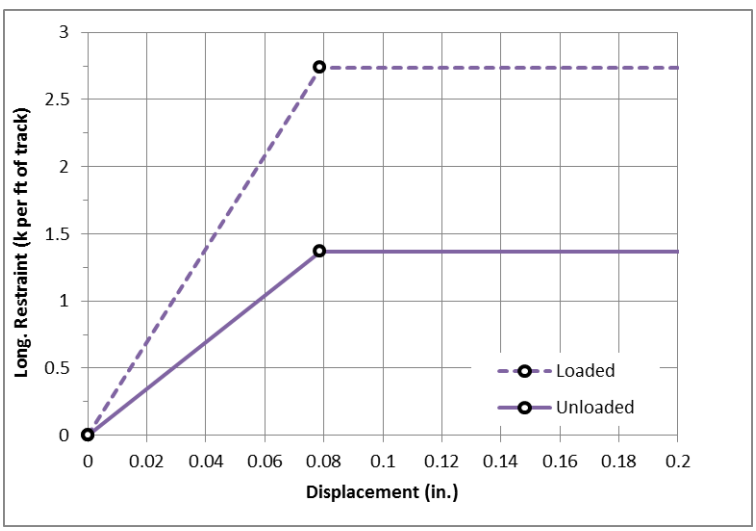

In practice, variations in fastener/tie spacing may be required to accommodate structural expansion joints, deck skew, or other geometric constraints.

Uniform longitudinal restraint shall be verified using the following uniformity criteria:

- Distributed longitudinal restraint calculated for fastener locations over any 10 foot length of track along the structure shall be within +/-20 percent of the assumed uniform bi-linear coupling relation.

For TSI-critical structures that meet the uniformity criteria, but are designed assuming longitudinal restraints not consistent with either Figure 12-32 or Figure 12-33, the structure shall

RFP No.: 13-57 – Addendum No. 5 - 10/09/2014

be considered to have a nonstandard fastener configuration (NSFC). These structures require an approved design variance and special RSI analysis per Section 12.6.8.6.

For TSI-critical structures that do not meet the uniformity criteria, the structure shall be considered to have a non-uniform fastener configuration (NUFC). These structures require an approved design variance and a special RSI analysis per Section 12.6.8.6.

The total number of longitudinal bi-linear coupling springs per each span shall not be less than 10 and the spacing between the springs shall not be more than 10 feet.

For vertical and lateral (i.e., transverse) stiffness of fasteners, defined as per foot of track (pair of rails) the following properties shall be used as applicable:

- Non-ballasted track:
  - Vertical stiffness: 4100 k/ft per foot of track
  - Lateral Stiffness: 420 k/ft per foot of track
- Ballasted track:
  - Vertical stiffness: 2100 k/ft per foot of track
  - Lateral Stiffness: 420 k/ft per foot of track

Constant vertical stiffness shall be used to model fastener compression and tension (uplift).

As a means to meet RSI criteria per Section 12.6.5, the Contractor may propose alternative track solutions (e.g., NSFC, NUFC, Rail Expansion Joints) through the design variance approval process. The design variance shall be supplemented with a special RSI analysis per Section 12.6.8.6.

12.6.8.6 Special Rail-Structure Interaction Analysis

RSI limits in Section 12.6.5are developed considering typical fastener configurations on typical structures. For those systems that do not meet these assumptions, new limits shall be developed using a refined analysis.

A special RSI analysis shall be required for those structure and track designs requiring a design variance related to Section 12.6.5. Specific design variances requiring special RSI analysis include, but are not limited to: designs requiring nonstandard fastener configurations (NSFC), non-uniform fastener configurations (NUFC), structures with thermal units (L_{TU}) greater than 330 feet, and rail expansion joints (REJs).

The Contractor shall identify and document structure types requiring special RSI analysis as part of the Type Selection process described in Section 12.8.1.1. After completion of Type Selection and upon determination that the selected structure type requires a special RSI analysis, the Contractor shall develop a Rail-Structure Interaction Design and Analysis Plan (RSIDAP) as part of the design variance submittal. The RSIDAP shall formally identify elements

RFP No.: 13-57 – Addendum No. 5 - 10/09/2014

requiring special consideration, including but not limited to: refined fastener properties, detailed temperature analysis, refined ballast/non-ballasted properties, and rail expansion joint locations. A detailed proposal of analysis procedures used to verify track performance (including track safety, passenger comfort, track maintenance, and rail stress) shall be submitted as part of the RSIDAP.

Examples of special analysis required may include, but are not limited to: development of new RSI limits, development of new analytical model elements, local rail stress modeling, site-specific temperature analysis, analysis of impacts to track maintenance, etc.

12.6.8.7 Modeling of Rail-Structure Interaction at Model Boundaries

Where an abutment occurs at the ends of TSI-critical structures, the rails and bi-linear coupling springs shall be extended a distance of L_{ext} from the face of the abutment. At the model boundary (i.e., at L_{ext} from abutment), a horizontal boundary spring representing the rail/fastener system behavior shall be used. The boundary spring, which represents unloaded track, shall be elastic-perfectly plastic, with an elastic spring constant of k (in units of k/feet) yielding at P_b (in units of kips), which represents the maximum capacity of an infinite number of elastic fasteners.

The yielding of the boundary spring at P_b is a threshold value that shall be checked throughout the RSI analysis. If at any point during the analysis the boundary spring yields at force P_b, L_{ext} should be increased and the analysis should be repeated until elastic boundary spring behavior is verified.

The boundary spring behavior depends on the type of track. Values of k, P_b, and L_{ext} are shown for non-ballasted and ballasted track types in Table 12-25. Note that the minimum recommended values of L_{ext} are dependent on the average span length of the TSI-critical structures (denoted L_{avg}):

$$L_{\text{avg}} = \frac{(L_1 + L_2 + \ldots + L_n)}{n}$$ = the average span length

RFP No.: 13-57 – Addendum No. 5 - 10/09/2014

Table 12-25: Minimum Recommended Track Extension and Boundary Spring Properties

Non-Ballasted Track (fasteners yield at 0.02 inches) with EN 60 E 1 rail			
Yield Load per foot of non-ballasted track	**k (kips/ft)**	**P_b (kips)**	**Min. Recommended L_{ext} (feet)**
1.37 kips/ft of track [1.54 kips (6.85 kN) fasteners @ 27" o.c.]	23,800	39.7	$0.1L_{avg}$ + 325
Ballasted Track (fasteners yield at 0.08 inches) with EN 60 E 1 rail			
Yield Load per foot of ballasted track	**k (kips/ft)**	**P_b (kips)**	**Min. Recommended L_{ext} (feet)**
1.37 kips/ft of track [1.54 kips (6.85 kN) fasteners @ 27" o.c.]	11,900	79.5	$0.1L_{avg}$ + 300

In the event that an additional bridge or other elevated structure is located within the L_{ext} model boundary distance from the face of an earthen abutment, the additional structure (including the loads and modeling requirements presented in this section) shall also be included in the RSI analysis model.

The assumptions used to develop Table 12-25 were expected to apply to the majority of TSI-critical structures, which are assumed to be in simply-supported configuration with uniform distribution of fasteners. Where a special rail-structure interaction analysis is required per Section 12.6.8.6, additional investigation shall be required to appropriately define the model boundary.

12.6.8.8 Modeling of At-Grade Track for TSI-Critical Structures

Typically, TSI-critical structures, such as bridges, aerial structures or grade separations, interface with at-grade track upon earthen embankments or cuts at abutment regions. Requirements and guidelines for modeling the at-grade track and abutment regions are provided below:

- For RSI Section 12.6.5.1 Groups 4 and 5 load cases, the vertical and lateral stiffness of non-ballasted or ballasted track upon earthen embankments or cuts shall be considered to accurately predict relative displacements at abutment expansion joints, and rail stress at the abutment and at-grade regions.

- The modeling of earthen embankments or cuts is not required for track serviceability (Section 12.6.4) or dynamic structural analysis (Section 12.6.6). However, if earthen embankments or cuts are modeled, the vertical and lateral stiffness of non-ballasted or ballasted track upon earthen embankments or cuts shall be considered.

- For dynamic VTSI analysis (Section 12.6.7) the vertical and lateral stiffness of non-ballasted or ballasted track upon earthen embankments or cuts shall be considered to accurately predict the wheel-rail contact forces and carbody accelerations when the vehicle passes through transition zones located between the elevated structure and at-grade regions.

RFP No.: 13-57 – Addendum No. 5 - 10/09/2014

- For vertical stiffness of at-grade track, consideration of the deformation moduli of second loading of a plate load test shall be made in accordance with the geotechnical reports required in the *Geotechnical* chapter.

- For lateral (i.e., longitudinal and transverse) stiffness of track upon earthen embankments or cuts, consideration of embankment flexibility, non-ballasted track or ballast tie embedment, passive pressure, and friction shall be made in accordance with the geotechnical reports required in the *Geotechnical* chapter.

- OBE ground motions shall be applied concurrently at structural foundations and earthen embankments or cuts to capture the effects between the vibrating structure and the relatively stationary track upon earthen embankment or cut. For design of earthen structures, lag times and/or amplification effects shall be considered for OBE ground motions in accordance with the geotechnical reports required in the *Geotechnical* chapter.

Under certain conditions, the performance of some TSI-critical structures may be highly sensitive to the modeling of at-grade track stiffness properties. Such conditions include, but are not limited to: TSI-critical culverts with limited cover, structures supporting complex transition slabs between at-grade and aerial structures, and short stiff embankments serving as transition between two aerial structures. Such conditions shall be considered on a case-by-case basis by the Contractor subject to approval by the Authority. A detailed modeling approach shall be provided as part of the TSIDAP per Section 12.6.1.

12.7 Structural Design of Stations, Surface Facilities, Buildings and Ancillary Structures

The static design of Primary Type 2 and Secondary stations, surface facilities, buildings and ancillary structures shall conform to the requirements of the CBC, with supplementary provisions herein. For the static design of Primary Type 1 stations, surface facilities, buildings and ancillary structures, refer to Section 12.5.

For the seismic design of Primary Type 2 and Secondary stations, surface facilities, buildings and ancillary structures, refer to the *Seismic* chapter.

For foundation design, refer to the requirements in the *Geotechnical* chapter.

12.7.1 Load Requirements for Stations, Surface Facilities, Buildings, and Ancillary Structures

Primary Type 2 and Secondary stations, surface facilities, buildings and ancillary structures shall conform to the requirements of the CBC, with supplementary provisions herein.

12.7.1.1 Dead Load and Superimposed Dead Load

Dead load and superimposed dead load shall include but not be limited to the following:

RFP No.: 13-57 – Addendum No. 5 - 10/09/2014

- Dead weight of structural members and architectural finishes
- Dead weight of road surface and of backfill above the structures
- Dead weight of surcharge loads
- Dead weight of equipment and appurtenances

Refer to Section 12.5 for the unit weights of materials.

12.7.1.2 Train Load

Refer to Section 12.5 for train loading.

12.7.1.3 Roof Load

Roof live load and reduction factors shall be in accordance with the CBC.

12.7.1.4 Floor Load

Floor live load, including parking structures, shall be in accordance with the CBC with no reduction in floor live load.

Station platforms and concourse areas shall be designed for a floor live load of 100 psf.

Emergency and maintenance walkways shall be designed for a floor live load of 100 psf.

Floor live loads on service walkways and sidewalks shall be designed for a live load of 100 psf, or a concentrated load of 2,000 pounds applied anywhere on the walkway and distributed over a 4 feet by 2 feet area.

The structural system supporting access doors at street level shall be designed for a floor live load of 350 psf.

Storage area floor live loads shall be 100 psf.

Areas where cash carts are used shall be designed to accommodate a point live load of 350 pounds per wheel. Wherever station configuration requires that cash carts cross pedestrian bridges, bridges shall be designed to accommodate this live load.

Operations Control Centers shall be designed for a floor live load of 100 psf.

Equipment room floors for such uses as signals, communications, power, transformers, battery storage and fan rooms shall be designed for a floor live load of 350 psf, and a 2,000 pound concentrated load (or the actual equipment weight if known) located to produce the maximum load effects in the structural members.

Pump rooms, service rooms, storage space, and machinery rooms shall be designed for floor live load of 250 psf, to be increased if storage or machinery loads so dictate.

RFP No.: 13-57 – Addendum No. 5 - 10/09/2014

Stairways shall be designed for a floor live load of 100 psf or a concentrated load of 300 pounds on the center of stair treads, whichever is critical.

Maintenance buildings will require overhead cranes and crane rails or floor mounted hydraulic jacks to lift individual cars from trains. The car loads are unknown until a vehicle is selected. The Designer shall coordinate with the Authority to obtain design requirements for crane design.

12.7.1.5 Vehicular Load

Parking areas for automobiles shall be designed to the load as specified in the CBC. Structures supporting buses shall be designed to carry HL-93 loading in accordance with AASHTO LRFD BDS with California Amendments.

Gratings in areas that are subject to vehicular loading shall be designed to carry HL-93 loading.

12.7.1.6 Miscellaneous Loads

Stationary and hinged cover assemblies internal to HST facilities shall be designed for a minimum uniform live load of 100 psf or a concentrated live load of 1,000 pounds over a 2 feet by 2 feet area. Deflection at center of span under 100 psf load shall not be more than 1/8 inch.

Gratings in sidewalks and in areas protected from vehicular traffic shall be designed for a uniform live load (LL) of 300 psf.

12.7.1.7 Slipstream Effects from Passing Trains

Refer to Section 12.5.2.7 for slipstream effects from passing high-speed trains.

Where structural elements can also be subjected to wind load, loading due to the slipstream effects from passing trains shall be considered to occur in combination with wind load. For Primary Type 2 and Secondary structures, refer to CBC for load combinations. For Primary Type 1 structures, refer to Table 12-4 for load combinations.

Where trains are enclosed between walls and with a ceiling and deck, the design requirements for tunnels shall be met (refer to the *Tunnels* chapter) including the following:

- Minimum cross section area of the through trackway
- Evacuation
- Fire/Life Safety
- Medical Health Criteria

In addition, transient air pressure analyses (as in a tunnel ventilation analysis) shall be used to determine the maximum transient air pressure acting on the walls and ceiling. These pressures shall be used for design of those elements such as uplift of ceilings or lateral pressure on walls and doors.

RFP No.: 13-57 – Addendum No. 5 - 10/09/2014

12.7.1.8 Collision Loads in Stations

Columns in stations shall be classified into 3 groups, according to the following criteria:

GROUP A – This group consists of columns where the clearance measured from the TCL to face column is no less than 16.5 feet. No collision impact forces shall be applied.

GROUP B – GROUP B columns are those located in a row of columns that run adjacent and parallel to the HST track and that do not meet the criteria of GROUP A. Columns in the row are classified as GROUP B, with the exception of the first and last columns (see GROUP C below). The column row shall include a column protection wall throughout its length. The performance of column and protection wall to this loading shall be a no collapse requirement.

- The column protection wall shall comprise a lower guide wall together with an upper guide beam integrated to the columns as shown on Figure 12-34. Due to the presence of the column protection wall, the GROUP B columns need not withstand full face collisions, but only grazing impacts by trains that have already derailed. The lower guide wall and the upper guide beam shall be designed to withstand collision impact loads.
- Columns and column protection walls shall be designed for 1 of the following horizontal collision impact loads, whichever produces the most adverse effect:
  - Columns shall be designed to resist a 900 kip force parallel with the TCL acting together with a 350 kip force at 90 degrees to the TCL, both 4 feet above low rail level and 225 kip force at 90 degrees to the TCL, 10 feet above TOR.
  - Lower guide wall shall be designed to resist a 900 kip force parallel with the TCL acting together with a 350 kip force at 90 degrees to the TCL, both 4 feet above top of low rail.
  - Upper guide beam shall be designed to resist a 225 kip force at 90 degrees to the TCL, acting 10 feet above top of low rail.

GROUP C – GROUP C consists of the first and last columns in a row that do not belong to Group A or Group B.

- The collision loads for GROUP C columns, as indicated above, are as follows:
  - Columns shall be designed for 1 of the following horizontal collision impact loads, whichever produces the most adverse effect. The performance for this loading is a no collapse requirement. A 2250 kip force parallel with the TCL acting together with an 800 kip force at 90 degrees to the TCL, both acting 4 feet above top of low rail
  - A 225 kip force at 90 degrees to the TCL, acting 10 feet above low rail level

  Alternatively, a protection device designed to resist the GROUP C impact loads shall be provided at the open face of the column as shown in Figure 12-35. The column in this figure shall be designed for the GROUP B column impact loads.

  Collision loads shall be combined as shown in Table 12-4 as an Extreme Load combination.

RFP No.: 13-57 – Addendum No. 5 - 10/09/2014

Figure 12-34: Collision Loads for Each Group of Columns

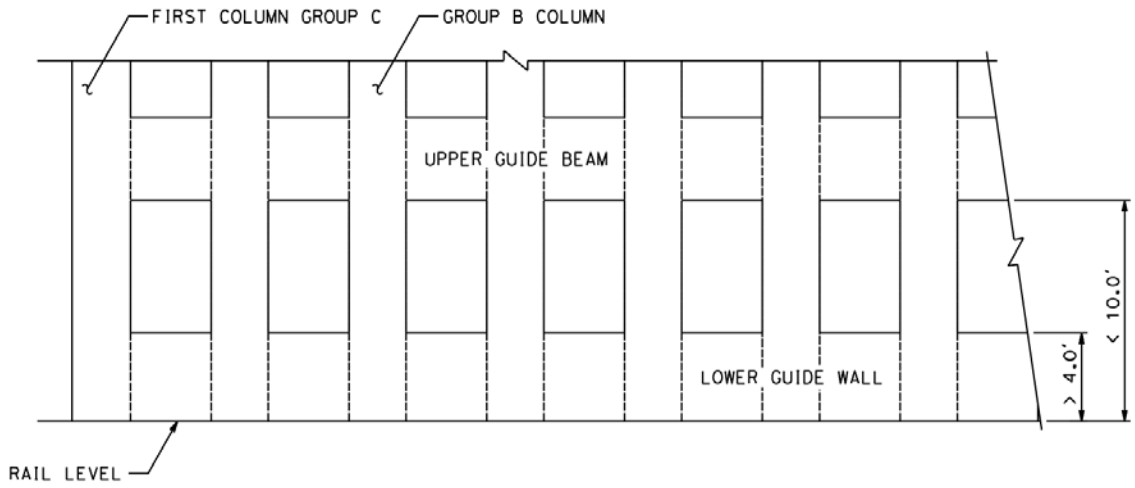

Figure 12-35: Protection Device

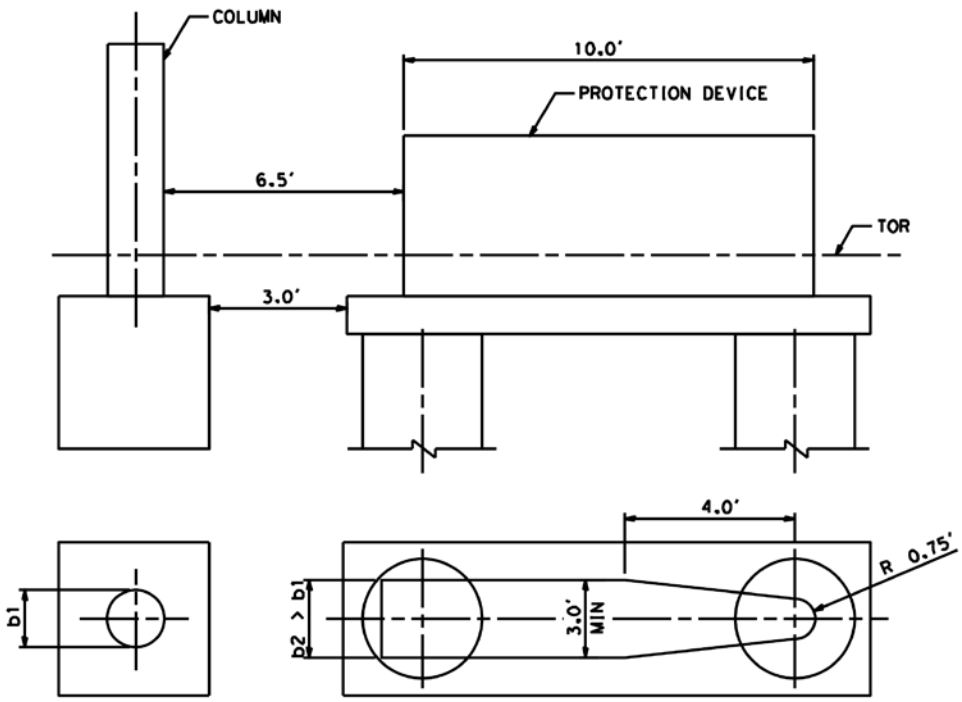

12.7.1.9 Collision Loads on Platforms

Platforms shall be designed to withstand a horizontal collision impact load of 225 kips applied at 90 degrees to the TCL of the nearest track located anywhere along the platform.

A 1-foot-wide void shall be provided around columns that are within platform areas to prevent transfer of collision loads to the column.

RFP No.: 13-57 – Addendum No. 5 - 10/09/2014

12.7.1.10 Wind Loads

Wind loads including both windward and leeward sides of buildings and other structures shall be in accordance with the provisions of CBC, with $I_w = 1.15$.

12.7.1.11 Effects of Temperature, Shrinkage and Creep

Effects of temperature, shrinkage, and creep shall be considered for structures above ground, as per requirements of the CBC.

12.7.1.12 Frequency and Vibration Limits

Primary Type 1 station structures, Primary Type 2 station structures and Primary Type 2 pedestrian bridges shall be designed to meet the following requirements for pedestrian comfort:

- The comfort criteria shall be defined in terms of acceptable acceleration of any part of the station platform or deck occupied by the public. The extreme acceleration demands of any part of the station platform or deck shall not exceed the following limits:
  - +/- 2.3 ft/s^2 for vertical vibrations
  - +/- 0.7 ft/s^2 for lateral vibrations
  - +/- 1.3 ft/s^2 for crowd condition vertical vibrations

  For Primary Type 2 station structures and Primary Type 2 pedestrian bridges, dynamic pedestrian load models specified in Section 12.7.1.13 shall be applied on the station or pedestrian structure to determine the extreme vertical and lateral acceleration demands.

  For Primary Type 1 station structures, dynamic pedestrian load models specified in Section 12.7.1.13 shall be applied on the station structure and the high-speed train loading (LLV) specified in Section 12.6.6.1 shall be considered simultaneously on the track structure to determine the extreme vertical and lateral acceleration demands.
- A verification of the comfort criteria need not be performed if the fundamental frequency of the station platform or deck is greater than the following:
  - 5 Hz for vertical vibrations
  - 2.5 Hz for horizontal (lateral) and torsional vibrations. Transverse frequency analysis shall consider the flexibility of superstructure <u>only</u>, excluding the flexibility of bearings, columns, and foundations, assuming the supports at the ends of the span are rigid.

12.7.1.13 Dynamic Pedestrian Load Models for Comfort Criteria

Dynamic pedestrian load models specified herein shall be used to perform the dynamic analysis of Primary Type 1 station structures, Primary Type 2 station structures and Primary Type 2 pedestrian bridges. Damping values specified in Table 12-23 shall be used. Refer to the *Seismic* chapter for provisions of determining Rayleigh damping for time-history analyses.

RFP No.: 13-57 – Addendum No. 5 - 10/09/2014

A. Vertical Concentrated Load

For verification of vertical vibrations, a vertical concentrated load, F_{p1} in kips as specified in Equation 12.7.1.13-1, shall be used to perform the dynamic analysis. The vertical concentrated load shall be moved across any horizontal direction on the structure at a constant speed of 5.6 fps to capture the extreme vertical acceleration demands of any part of the station platform or deck. This load shall be applied concurrently with the lateral concentrated load specified in Equation 12.7.1.13-2 and may be distributed over a 7.5 feet by 7.5 feet area. The portion of static load in Equation 12.7.1.13-1 (2.9 kip) does not generally contribute to the dynamic response and may be omitted.

$$F_{p1} = 2.9 + 0.22 \cdot k_v \cdot \sin(2\pi \cdot f_v \cdot t) \qquad \text{(Equation 12.7.1.13-1)}$$

Where:

f_v = natural vertical frequency of the structure (Hz), that is the closest to the frequency range of 1.583 to 2.10 Hz.

t = elapsed time (second)

$$k_v = \begin{cases} 0.3f_v & \text{for } f_v \leq 1\ Hz \\ 1.2f_v - 0.9 & \text{for } 1\ Hz < f_v < 1.583\ Hz \\ 1.0 & \text{for } 1.583\ Hz \leq f_v \leq 2.10\ Hz \\ -f_v + 3.1 & \text{for } 2.10\ Hz < f_v < 2.80\ Hz \\ 0.3 & \text{for } f_v \geq 2.80\ Hz \end{cases}$$

B. Lateral Concentrated Load

For verification of lateral vibrations, a lateral concentrated load, F_{p2} in kips as specified in Equation 12.7.1.13-2, shall be used to perform the dynamic analysis. The lateral concentrated load shall be applied normal to the moving direction of vertical concentrated load to capture the extreme lateral acceleration demands of any part of the station platform or deck. This load shall be applied concurrently with the vertical concentrated load specified in Equation 12.7.1.13-1 and may be distributed over a 7.5 feet by 7.5 feet area.

$$F_{p2} = 0.055 \cdot k_h \cdot \sin(2\pi \cdot f_h \cdot t) \qquad \text{(Equation 12.7.1.13-2)}$$

Where:

f_h = natural lateral frequency of the structure (Hz), that is the closest to the frequency range of 0.792 to 1.05 Hz.

t = elapsed time (second)

$$k_h = \begin{cases} 0.6f_h & \text{for } f_h \leq 0.5\ Hz \\ 2.4f_h - 0.9 & \text{for } 0.5\ Hz < f_h < 0.792\ Hz \\ 1.0 & \text{for } 0.792\ Hz \leq f_h \leq 1.05\ Hz \\ -2f_h + 3.1 & \text{for } 1.05\ Hz < f_h < 1.40\ Hz \\ 0.3 & \text{for } f_h \geq 1.40\ Hz \end{cases}$$

RFP No.: 13-57 – Addendum No. 5 - 10/09/2014

C. Vertical Uniform Distributed Load for Crowd Conditions

For verification of crowd condition vertical vibrations, a vertical uniformly distributed load, F_{p3} in ksf as specified in Equation 12.7.1.13-3, shall be used to perform the dynamic analysis. This load shall be placed in a manner to produce the extreme vertical acceleration demands of any part of the station platform or deck. The portion of static load in Equation 12.7.1.13-3 (0.025 ksf) does not generally contribute to the dynamic response and may be omitted.

$$F_{p3} = 0.025 + 0.0025 \cdot k_v \cdot \sin(2\pi \cdot f_v \cdot t) \qquad \text{(Equation 12.7.1.13-3)}$$

Refer to Section 12.7.1.13-A for f_v, t and k_v.

12.7.2 Foundations for Equipment Enclosures

Refer to the *Traction Power Supply System* chapter, *Automatic Train Control* chapter, and the *Communications* chapter.

For other equipment facilities, follow geotechnical recommendations and the provisions of CBC for design of foundations.

12.7.3 Foundations for Utility Equipment

Foundations for utility equipment shall comply with the requirement of CBC and in addition meet the requirements of the individual utility.

12.8 Design Considerations for Primary Type 1 Bridges, Aerial Structures, and Grade Separations

Unless otherwise specified, design of Primary Type 1 bridges, aerial structures, and grade separations shall be performed in accordance with AASHTO LRFD BDS with California Amendments.

Design of Primary Type 1 bridges, aerial structures, and grade separations shall satisfy criteria that exceed those of highway and conventional rail bridges because of the following:

- Particular effects that are critical to HST include:
  - Frequency of repetition (fatigue of materials)
  - Repetitive load applications (dynamic structural response)
  - Interaction of track and structure
- Riding comfort criteria
- High operating demands (life time of structure)
- Limited hours available for inspection, maintenance and repair

RFP No.: 13-57 – Addendum No. 5 - 10/09/2014

To meet the above mentioned criteria, Primary Type 1 bridges, aerial structures, and grade separations shall be designed to conform to the following characteristics:

- Small deflections and good resilience to dynamic responses to ensure passenger safety and a very high level of comfort
- Low probability of resonance
- Conceptual simplicity and standardization for ease of construction, fast track construction and higher maintenance reliability
- Reduction of environmental noise and vibration impact

12.8.1 General Design Requirements

12.8.1.1 Type Selection

The structural types selected for design and construction of the Primary Type 1 bridges, aerial structures, and grade separations shall be selected in a type selection process. The applicable type selection process specified in the Caltrans OSFP Information and Procedures Guide *for Planning Studies and Type Selection* shall be followed. The Authority's preferred type of superstructure carrying main line structures is prestressed concrete single-cell box girders. Box girders can be precast, precast segmental, or cast in-place, cast-in-place span by span, incrementally launched, or other similar types of construction. The Contractor shall demonstrate to the satisfaction of the Authority that an alternative is equal to or better in all respects than the Authority's preferred type of superstructure. The use of any alternative shall be subject to the Authority's approval.

For specific locations, multi-cell girders, multi-box girders, through girders or through trusses constructed by piece or incrementally launched may be more appropriate.

The Type Selection shall include seismic considerations, foundation recommendations, aesthetics review, traffic maintenance (both highway and rail), drainage considerations and intrusion protection. The Type Selection Report shall include all of the following that apply to the specific bridge, aerial structure, or grade separation:

- Type Selection Memo (refer to Caltrans OSFP Information and Procedures Guide)
- Hydrology and Hydraulics reports
- Aesthetics Design and Review Report
- Geotechnical Engineering Design Report
- Track-Structure Interaction Design and Analysis Plan (TSIDAP) (Section 12.6.1)
- Seismic Design and Analysis Plan (SDAP), refer to *Seismic* chapter
- Complex and Non-Standard Aerial Structures Load Path Report (Section 12.8.7)

RFP No.: 13-57 – Addendum No. 5 - 10/09/2014

If rail expansion joints are considered the variance process shall start at Type Selection.

For Primary Type 2 and Secondary structures, Type Selection shall follow the requirements of the Caltrans OSFP Information and Procedures Guide. The Type Selection shall be coordinated with the Authority and the Party that owns the structure to determine and identify any constraints that may control the design that are not identified in these Design Criteria.

12.8.1.2 Clearances

Clearances requirements are specified in the *Trackway Clearances* chapter.

12.8.1.3 Water Crossings

Hydraulic requirements for bridge drainage and requirements for water crossings are specified in the *Drainage* chapter.

12.8.1.4 Deck Arrangement

The arrangement of deck features shall conform to the requirements presented in the Standard and Directive Drawings.

12.8.1.5 Material Requirements

A. Concrete Requirements

The minimum 28-day concrete compressive strength (f′c) shall be as follows:

- For piles, shafts, and footing reinforced concrete cast-in-place structures: f'c = 4,000 psi
- For above ground reinforced concrete cast-in-place structures: f'c = 5,000 psi
- For cast-in-place prestressed concrete: f'c = 6,000 psi
- For precast prestressed members: f'c = 6,000 psi
- Lightweight concrete is not allowed in Primary Type 1 structures. Lightweight concrete may be used in secondary concrete such as leveling concrete.

For design of cast-in-place piles and shafts, the nominal concrete strength shall not be greater than f′c = 4,000 psi

B. Reinforcing Steel

Reinforcing steel for concrete reinforcement including spiral reinforcement shall conform to ASTM A706/706M, Specification for Low-Alloy Steel Deformed and Plain Bars for Concrete Reinforcement.

Plain wire for welded wire fabric shall comply with ASTM A82, Specification for Steel Wire, Plain, for Concrete Reinforcement.

C. Concrete Cover

Minimum concrete cover shall conform to AASHTO LRFD BDS with California Amendments Table 5.12.3-1, with the following exceptions:

RFP No.: 13-57 – Addendum No. 5 - 10/09/2014

- Uncased drilled shafts: 6 inches
- Cased drilled shafts with temporary casing: 4 inches

D. Prestressing Steel

Prestressing steel shall conform to the requirements of ASTM A416/A416M, or ASTM A722. Prestressing strand or wire shall be low relaxation. Additional requirements follow:

- Only post-tensioning systems that utilize tendons fully encapsulated with grout within the anchorages and ducts are allowed.
- Embedded anchors for bars are permitted.
- Strand or tendon couplers are not permitted.
- Select the post-tensioning grout for use by the proper application either repair, horizontal, or vertical. Grout will be mixed with potable water.
- Grout
  - Only pre-packaged grout mixes designed for the specific application are permitted. The grout shall not contain aluminum or other components that produce hydrogen, carbon dioxide or oxygen gas.
  - Chemical testing of a fresh dry sample taken from a bag in each lot of prepackaged grout shall be performed to determine chloride concentrations in accordance with the following requirement. Total chloride ions shall be less than 0.08 percent measured by weight of cementious material according to ASTM C1152.
- Anchorages
  - Ensure that anchorages develop at least 95 percent of the actual ultimate tensile strength of the prestressing steel when tested in an unbonded state, without exceeding the anticipated set.
  - Design anchorages so the average concrete bearing stress is in compliance with AASHTO LRFD BDS with California Amendments.
  - Test and provide written certification that anchorages meet or exceed the testing requirements in the AASHTO LRFD Bridge Construction Specifications.
  - Equip anchorages with a permanent grout cap vented and bolted to the anchorage. Provide wedge plates with centering lugs or shoulders to facilitate alignment with the bearing plate. Cast anchorages with grout outlets suitable for inspection from either the top or front of the anchorage. The grout outlet shall serve a dual function of grout outlet and post-grouting inspection access. The geometry of the grout outlets must facilitate being drilled using a 3/8-inch-diameter straight bit to facilitate endoscope inspection directly behind the anchor plate. Anchorages may be fabricated to facilitate both inspection locations or may be 2 separate anchorages of the same type – each providing singular inspection entry locations.

RFP No.: 13-57 – Addendum No. 5 - 10/09/2014

- Anchorages shall be protected with epoxy grout encapsulation with an elastomeric coating.

- Ducts and Pipes
  - Do not use ducts manufactured from recycled material.
  - Use seamless fabrication methods to manufacture ducts.
  - Ferrous metal ducts shall not be used.
  - Precast segmental bridges with internal tendons shall use segmental duct couplers with 6 degrees of alignment allowance at all segment joints.

E. Structural Steel

Structural steel design for bridge-type structures shall meet the requirements of the AASHTO LRFD BDS with California Amendments.

Structural Steel Shapes shall conform to ASTM A6. Additional properties are as follows:

- Wide flange shapes: ASTM A992
- M-shapes, S-shapes, HP shapes: ASTM A572
- Angles, Channels: ASTM A572
- Rectangular and square hollow sections: ASTM A500 Gr B (46 ksi)
- Round hollow sections: ASTM A500 Gr B (42 ksi)
- Steel pipe: ASTM A53 Gr B (35 ksi)
- Plates, Bars: ASTM A36 (36 ksi)
- Bolts: ASTM A325
- Nuts: ASTM A563
- Washers: ASTM F436
- Rods: ASTM F1554

Welding of built up members and steel fabrications shall comply with AASHTO/AWS D 1.5.

Welding of HSS sections and pipes shall comply with AWS D 1.1.

Miscellaneous steel items shall be hot-dip galvanized after fabrication unless completely embedded in concrete and unless noted otherwise.

Splice Locations – If splicing of a structural steel member is permitted, indicate and detail the location of the splice. Such locations shall be at or near a cross section of minimum stress.

RFP No.: 13-57 – Addendum No. 5 - 10/09/2014

12.8.2 Design Loads and Effects

Primary Type 1 structure loads and load combinations are specified in Section 12.5. Track-Structure Interaction requirements are specified in Section 12.6. Seismic requirements are specified in the *Seismic* chapter.

12.8.3 Foundations

12.8.3.1 Shallow Foundation Design

Shallow foundations such as spread footings shall be designed in accordance with AASHTO LRFD BDS with California Amendments. Soil and rock engineering properties shall be based on the results of field investigations as presented in the Geotechnical reports described in the *Geotechnical* chapter. Use of presumptive values shall not be allowed.

12.8.3.2 Deep Foundation Design

Design of deep foundations shall be based on project-specific information developed for the location(s) and foundation type planned. Soil and rock engineering properties shall be based on the results of field investigations as presented in the geotechnical reports described in the *Geotechnical* chapter. Use of presumptive values shall not be allowed. Bottom clean out of drilled shafts constructed using the wet method shall be verified.

Where permanent steel casing is used for structural capacity, it shall have a minimum wall thickness of 3/4 inch and be provided with internal shear lugs if composite action is to be relied upon. Additionally, the design basis of the steel section shall be reduced to account for corrosion over the life of the structure based on actual soil and ground water conditions. A site specific corrosion study shall be performed to determine the deduction of the wall thickness due to the corrosive characteristics. A minimum 1/8 inch reduction in wall thickness shall be applied. Steel casing shall not be considered for structural support in extremely aggressive corrosive environments.

For trackway shafts greater than 5 feet in diameter, the drilled shafts shall be designed assuming they are offset at the top of the shaft a minimum of 6 inches. Refer to the Standard Specification on Drilled Concrete Piers and Shafts.

Geotechnical Design of micropiles shall be in accordance with AASHTO LRFD BDS with California Amendments, Article 10.9: Micropiles and FHWA-SA-97-070 (Micropile Design and Construction Guidelines, June 2000).

The upper 5 feet as measured from lowest adjacent grade shall be discounted in any axial and lateral load capacity analyses except where measures are provided to prevent future excavations around the shaft or pile group. When determining the demand forces, the upper 5 feet shall be considered.

RFP No.: 13-57 – Addendum No. 5 - 10/09/2014

12.8.4 Steel Structures

Steel through trusses and through girders may be used for longer spans requiring minimal structure depth and other steel built up sections, beams and girders may be used over railroads or highways.

12.8.4.1 Continuous Steel Structures

For continuous girders and other statically indeterminate structures, the moments, shears, and thrusts produced by external loads shall be determined by elastic analysis. The effects of creep, shrinkage, axial deformation, restraint of attached structural elements, and foundation settlements shall be considered in the design.

12.8.4.2 Fracture Critical Members

Fracture critical members shall be designed in accordance with AASHTO LFRD BDS with California Amendments. A load factor of 1.50 shall apply to live load of the fatigue load combination shown in Table 12-4. Field welding in tension zones in fracture critical members is not permitted.

12.8.4.3 High Performance Coating

Steel bridges shall have a high performance coating system such as polysiloxane, polyaspartic modified urethane, or fluoropolymer which may be applied in the field. Primer shall be inorganic or organic zinc as recommended by the manufacturer of finish coats. Coatings including primers shall comply, at a minimum, with South Coast Air Quality Management District (SCAQMD) Rule 113.

The Contractor shall provide services of an independent coating inspector. The independent coating inspector shall be certified under NACE International's Certified Inspector Program as a Certified Coating Inspector.

12.8.4.4 Orthotropic Steel Decks

Steel orthotropic plate decks shall not be used for Primary Type 1 structures.

12.8.4.5 Bearing Replacement

Reinforced jacking points shall be provided and identified clearly on As-Built drawings.

12.8.4.6 Inspection and Maintenance of Steel Structures

Steel bridge construction details shall reflect that safe inspection and maintenance will occur during non-revenue service. For structures over railroads or highways, access for safe inspection and maintenance to the below deck elements shall be provided. Steel box girders and box beams shall have access hatches to allow maintenance and inspection of the member.

12.8.5 Concrete Structures

Bridge, aerial structure, and grade separation superstructures may be constructed using cast-in-place concrete, precast girders either single span, span by span or segmental, as well as cast-in-

RFP No.: 13-57 – Addendum No. 5 - 10/09/2014

place, segmental balanced cantilever or incrementally launched methods. Concrete through girders shall meet the same requirements as steel through girders.

The CEP-FIP Model Code for Concrete Structures shall be used for determining time dependent effects due to creep, shrinkage and prestressing steel relaxation.

12.8.5.1 Longitudinal Tension Stresses in Prestressed Members

AASHTO LRFD BDS with California Amendments shall be used for allowable longitudinal tension stresses. Tension stresses are not allowed in pre-compressed tensile zones after all losses have occurred.

12.8.5.2 Additional Requirements for Segmental Trackway Construction

Shear and torsion design shall conform to AASHTO LRFD BDS with California Amendments, Article 5.8.6.

Principal tensile stresses in webs shall conform to AASHTO LRFD BDS with California Amendments, Article 5.8.5.

Precast segmental concrete construction with dry segment joints shall not be permitted. Joints in precast segmental bridges and aerial structures shall be either cast-in-place closures or match cast epoxied joints.

Hollow columns shall have a solid section with the greatest of the following: minimum 5 feet above finished grade or 12 feet above high water level or a minimum of 1.5 times the maximum column dimension above top of the foundation. Vertical post-tensioning is not allowed in the solid sections. For maintenance access opening, refer to Section 12.8.10. Access openings shall be located outside of potential plastic hinge zones. Internal platforms, ladders and landings shall be provided.

12.8.5.3 Crack Control

The design of prestressed concrete or reinforced concrete structures shall consider the effect of temporary loads imposed by sequence of construction stages, forming, falsework, and construction equipment, as well as the stresses created by lifting or placing pre-cast members, stress concentration (non-uniform bearing at the ends of pre-cast beams), end block design and detailing, methods of erection, shrinkage, and curing. Structural design, specifications, and detailing of pre-stressed or reinforced concrete members shall meet durability and serviceability requirements with crack widths no greater than allowed by AASHTO LRFD BDS with California Amendments Class 2 exposure condition in construction stages or service. If the concrete member is continuously submerged in water or is in a zone of intermittent wetting and drying, the exposure factor used in AASHTO LRFD BDS with California Amendments Article 5.7.3.4 shall be 0.25 or less.

RFP No.: 13-57 – Addendum No. 5 - 10/09/2014

12.8.5.4 Maintenance and Inspection of Concrete Structures

Inspection and maintenance access openings with steel grating shall be provided into each closed box girder cell. Intrusion by birds and insects to the inside of box girder cell shall be considered. These access openings may be through the girder soffits or in combination with openings between adjacent girder diaphragms. Refer to 12.8.10 for more details.

The minimum headroom inside of typical box girders shall be 6 feet for the span length greater than or equal to 100 feet. For span length less than 100 feet the minimum headroom inside of typical box girders shall be 5 feet.

For the short structures up to total length of 270 feet with multiple short spans, the minimum headroom inside of box girders may be reduced to 4 feet.

In-span hinges and associated expansion joints are not allowed.

12.8.5.5 Continuous Concrete Structures

For continuous girders and other statically indeterminate structures, the moments, shears, and thrusts produced by external loads and prestressing shall be determined by elastic analysis. The effects of creep, shrinkage, axial deformation, restraint of attached structural elements, and foundation settlements shall be considered in the design.

12.8.6 General Bridge, Aerial Structure, and Grade Separation Features

12.8.6.1 Bridge Skew

The preferred angle of bridges, aerial structures, and grade separations crossing relative to the TCL is 90 degrees. In cases where a 90 degree crossing cannot be constructed, the skew of the bridge shall be limited so that for each track the deck end is between successive pairs of rail fasteners and the applicable provisions of Section 12.6 are met. The maximum bridge skew from 90 degrees shall not exceed 30 degrees.

12.8.6.2 Embankment Length between Abutments

The length of embankment between abutments shall not be less than 500 feet. The length of embankment between an abutment and a culvert shall not be less than 100 feet. If closer spacing is required, then the embankment shall be specially treated such that a constant gradient of stiffness shall be provided between the 2 adjacent bridges. Refer to the *Geotechnical* chapter for specific requirements for embankment fills and abutment backfill.

12.8.6.3 Trackside Cable Trough Walls

Trackside cable trough walls shall be provided, as described in Section 12.5.2.13-B.

12.8.6.4 Intrusion Protection

Bridges, aerial structures, and grade separations shall be protected from errant highway vehicles as well as from derailed trains as described in the *Rolling Stock and Vehicle Intrusion Protection* chapter and as required in the following:

RFP No.: 13-57 – Addendum No. 5 - 10/09/2014

A. Highway Traffic Intrusion

Primary Type 1 substructures, as required by the *Rolling Stock and Vehicle Intrusion Protection* chapter, shall be protected by an appropriate barrier as specified AASHTO LRFD BDS with California Amendments Article 3.6.5.1 or designed for the force presented in AASHTO LRFD BDS with California Amendments, Article 3.6.5.2.

B. Railroad Intrusion

Primary Type 1 substructures located adjacent to conventional railroad shall be protected as specified in the *Rolling Stock and Vehicle Intrusion Protection* chapter. The design shall follow the requirements of AASHTO LRFD BDS with California Amendments, Article 2.3.3.4. If an independent intrusion barrier is not provided, the substructure shall be designed to resist collision loads (CL) per Section 12.5.2.14, and Table 12-4.

12.8.6.5 Uplift

Hold-down devices shall be provided at bearings where the vertical force due to the MCE seismic load opposes and exceeds 50 percent, but is less than 100 percent, of the dead load reaction. The dead load reaction shall include the dead load of structural components and permanent attachments (DC) and the dead load of non-structural attachments (DW). In this case, the net uplift force for the design of the hold-down device shall be taken as ten percent of the dead load reaction.

If the vertical seismic force at bearings results in net uplift, the hold-down device shall be designed to resist the larger of either:

- 120 percent of the difference between the vertical seismic force and the dead load reaction, or
- Ten percent of the dead load reaction.

For multicolumn bents, there shall be no net uplift at any column under Service load combinations. Net uplift is allowed for Strength and Extreme load combinations.

For deep foundations, there shall be no net uplift on piles under Service load combinations. For uplift of piles under Strength and Extreme load combinations, refer to the *Geotechnical* chapter.

For shallow foundations, there shall be no net uplift under any load combinations. For stability of shallow foundations, refer to the *Geotechnical* chapter.

12.8.6.6 Friction

Friction shall be considered in the design where applicable.

12.8.6.7 Sound Barriers

Both the presence and absence of sound barriers shall be considered in the evaluation of stress, vibration, and deflection.

RFP No.: 13-57 – Addendum No. 5 - 10/09/2014

12.8.6.8 Drainage

Drainage from bridges, aerial structures, and grade separations shall be accomplished by sloping the deck towards the center of the deck, and sloping the girders towards a pier support or abutment. Water shall be collected and conveyed to a drainage pipe cast into the concrete substructure. The pipe shall pass through the pier columns and abutment walls to exit through the foundations to a point of discharge. Column reinforcing in potential plastic hinge zones shall not be interrupted for drain pipes. Refer to the *Drainage* chapter for other requirements.

12.8.6.9 Expansion Joints

Expansion joints shall be provided between girder ends and between girder end and abutment walls to allow superstructure movements and prevent water and other material from falling from the superstructure. Expansion joints are not required to resist highway or rail traffic loads, but shall be protected from ballast if ballast is used. Expansion joints may be part of a bridge drainage system.

The design life of expansion joints is given in the *General* chapter. Expansion joints shall be detailed to allow replacement during the non-revenue service maintenance work window. Refer to Section 12.6 for limits to the length of thermal units, and limits to relative expansion joint displacements.

A. Structural Expansion Joints

Structural expansion joints (SEJ) shall be watertight and their design shall achieve the following:

1. Provide free movement space in the bridge longitudinal and transverse directions for the following:

   – Service 1 load combination.

   - Service 3 load combination plus OBE. Regardless of number of tracks on the structure, consideration of the train effects shall include 1 train vertical live load plus impact, 1 train longitudinal braking force and mass of 1 train, applied at the center of train mass. The train and its associated loads shall be placed and applied to produce maximum movement of the joint gap. The load factors for thermal and settlement loads shall be 0.50.

   Expansion joints and connections to the structure shall be capable of resisting loads transmitted through the ballast under these loading conditions.

2. Under a MCE earthquake, local damage of structure expansion joints in the longitudinal and transverse directions is allowed. The Contractor shall consider the effects of structural pounding in their analysis, design and detailing. The Contractor shall verify that damaged joint elements will not induce changes to the structural behavior leading to collapse of the structure. Extreme 3 load combination shown in Table 12-4 shall be used.

RFP No.: 13-57 – Addendum No. 5 - 10/09/2014

3. For ballasted track, if buried type expansion joints are used, no part of the structure expansion joints shall protrude above the top surface of the protection layer for waterproofing membrane.

The Contractor shall adjust the joint gap during installation to accommodate the effects of prestressing including shrinkage and creep, and the difference between the ambient temperature and the design temperature.

Longitudinal and transverse movements developed prior to the installation of expansion joint devices need not be considered. The longitudinal movement for each load effect shall be provided on the as-built drawings to facilitate future replacement.

The installation of turnouts and SEJ shall be based on requirements in Section 12.8.6.9-B.

B. Structure Expansion Joints in Structures Supporting Special Trackwork

SEJs may be placed within turnout and crossover units as needed to minimize relative movement between structures and track. SEJs shall not be located within areas of special track supporting plates nor within the vicinity of the movable portions of switches and frogs. SEJs under special trackwork units shall be perpendicular or close to perpendicular to the orientation of the track. Potential movement of the structure relative to the track shall be oriented with the alignment of the track.

Permissible and prohibited locations for joints are illustrated on Figure 12-36 and Figure 12-37 and the limiting location dimensions given in Table 12-26 and Table 12-27.

Figure 12-36: Joint Location Limitations at Low-Speed Turnouts

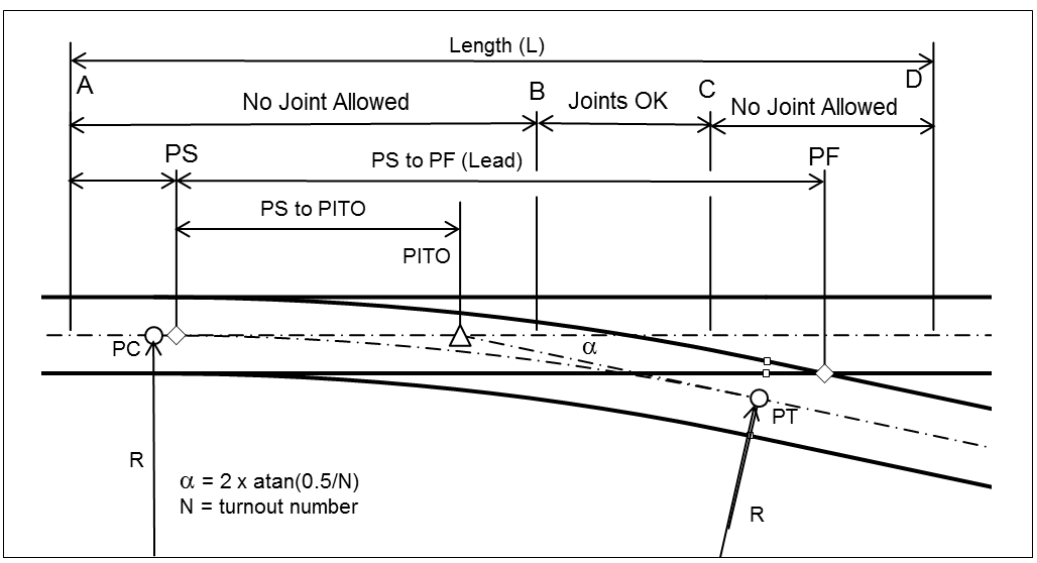

RFP No.: 13-57 – Addendum No. 5 - 10/09/2014

Table 12-26: Joint Location Limitations at Low-Speed Turnouts

Turnout Properties					Location of points defining limits of joints (feet)				Length of No Joint / Allowed Joint Zones (feet)		
Internal Radius (feet)	PC to PS (feet)	N	Turnout angle α	PS to PI (feet)	PS to A	PS to B	PS to C	PS to D	No Jt. A to B	Jt. OK B to C	No Jt. C to D
620.0	1.69	9	6d21m35s	32.75	20.0	40.6	62.2	86.8	60.6	21.6	24.6
950.0	1.93	11	5d12m18s	41.25	20.0	50.3	77.0	107.2	70.3	26.7	30.2
1,750.0	2.58	15	3d49m06s	55.75	25.0	68.3	104.5	145.8	93.3	36.2	41.3
3,250.0	3.25	20	2d51m51s	78.00	25.0	93.1	142.5	198.0	118.1	49.4	55.5
4,650.0	3.87	24	2d23m13s	93.00	25.0	111.3	170.4	237.0	136.3	59.1	66.6

Figure 12-37: Joint Location Limitations at High-Speed Turnouts

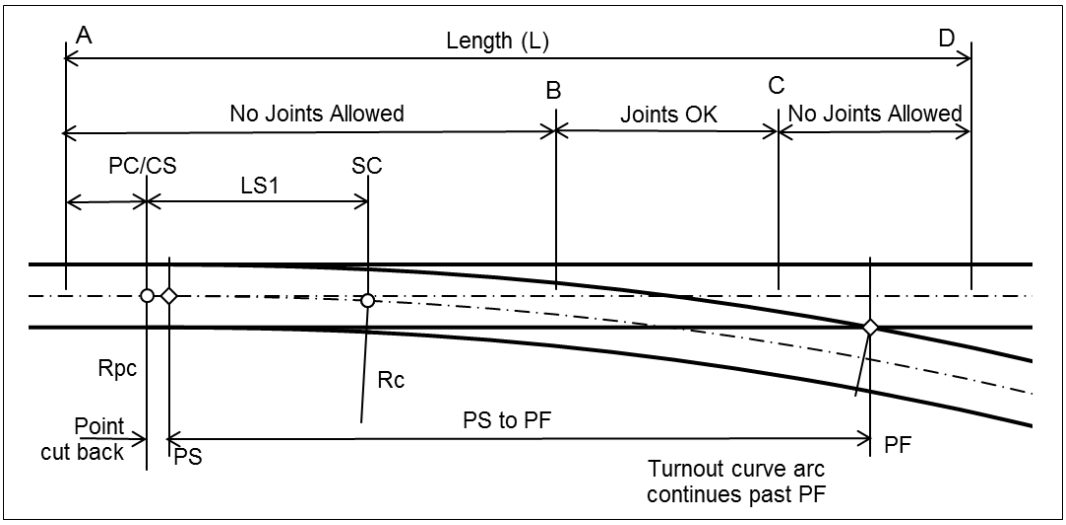

RFP No.: 13-57 – Addendum No. 5 - 10/09/2014

Table 12-27: Joint Location Limitations at High-Speed Turnouts

Turnout Properties					Location of points defining limits of joints (feet)				Length of No Joint / Allowed Joint Zones (feet)		
Design Speed (mph)	Entry Radius Rpc (feet)	entry spiral length (feet)	body radius Rc (feet)	Switch point cutback (feet)	PC to A	PC to B	PC to C	PC to D	No Jt. A to B See note	Jt. OK B to C	No Jt. C to D
60	10,000	90.00	5,000	5.53	23.97	134.3	207.3	270.7	157.8	73.0	63.4
80	18,000	120.00	9,000	7.53	22.47	180.0	278.0	363.1	202.5	98.0	85.1
110	34,000	160.00	17,000	9.76	20.24	246.6	387.3	498.0	266.8	140.7	110.7
150	80,000	220.00	32,000	15.07	14.93	348.9	542.1	694.2	363.8	193.2	152.1

Note: For the 110 mph turnout 1 structural joint may be placed up to 42 feet in advance of point B. For the 150 mph turnout 1 structural joint may be placed up to 58 feet in advance of point B.

12.8.6.10 Longitudinal Joints in Structures Supporting Special Trackwork

In zones of special trackwork, where tracks will cross between parallel superstructure elements such as girders, those superstructure elements shall be connected into a continuous deck that can support the tracks as well as a derailed train with loads described in Section 12.5.2.13. The deck shall be cast in place or made continuous with a longitudinal closure strip between parallel decks. The transverse strengthening shall also include rigid diaphragms, post-tensioning, welded steel plates or other such strengthening elements. Railroad box sections post-tensioned together transverse to the track alignment shall be considered to have a continuous deck. This lateral continuity shall extend through the entire length of special trackwork such that:

- No longitudinal expansion joints in zones of low-speed turnout special trackwork from 25 feet before the initial point of switch to 25 feet beyond the final point of switch
- No longitudinal expansion joints in zones of high-speed turnout special trackwork from 30 feet before the initial point of switch to 30 feet beyond the final point of switch

For point of switch (PS) refer to Figure 12-36 and Figure 12-37. This continuity is independent of the structural expansion joints described in Section 12.8.6.9.

12.8.6.11 Bearings

AASHTO LRFD BDS with California Amendments shall be used for design of bearings. Elastomeric bearings, disk bearings, spherical bearings and seismic isolation bearings are allowed. If seismic isolation bearings are used, a design variance shall be submitted following the requirements of the *Seismic* chapter. Longitudinal and lateral restraints for all bearing types shall be arranged to result in a symmetrical deflection shape (in plan) as shown on Figure 12-12 and Figure 12-15.

The design life of bearings shall be as presented in the *General* chapter. Since bearings will be replaced during the life of the structure, an inspection and replacement plan for bearings shall

RFP No.: 13-57 – Addendum No. 5 - 10/09/2014

be provided. Inspection and replacement shall be allowed only during the non-revenue service hours.

12.8.6.12 Rail Stress and Structural Deformation Limits

Refer to Section 12.6 for additional requirements related to track-structure interaction, which includes rail stress and structural deformation limits.

12.8.6.13 Span Arrangement on Repetitive Span Aerial Structures

Amplification of vibrations and poor ride quality has been observed on high-speed trains traveling on long aerial structures where the same span is repeated many times. In order to mitigate this response, long repetitive span aerial structures shall have their typical span length modified every 20 spans. The modification shall include at least 2 consecutive spans differing in length by not less than 20 percent from the typical span length.

12.8.6.14 Camber and Deflections for Structures

Steel bridge, aerial structure, and grade separation superstructures shall be cambered to compensate for the vertical track alignment and the sum of deflections under dead load of structural components and permanent attachments (DC) and dead load of non-structural and non-permanent attachments (DW). Camber diagrams shall be provided on the plans. The sequence of load application to account for construction stages shall be considered for determining the required camber.

For prestressed and reinforced concrete bridge, aerial structure, and grade separation superstructures, diagrams showing a predicted deck profile at the completion of civil construction shall be provided on the plans and shall consider the sequence of load application to account for construction stages. The vertical difference between the vertical track alignment and the predicted deck profile at the completion of civil construction shall not be less than the distance from top of low rail to top of deck as defined in the *Track* chapter. The total long-term predicted camber growth measured after the completion of civil construction shall be less than L/5000 (L=span length).

To ensure rider comfort, the deflection of longitudinal girders under normal live load plus dynamic load allowance shall be as described in Section 12.6.

12.8.6.15 Structure Deformation and Settlement

The control of deformations through proper structural design is of paramount importance in obtaining acceptable ride quality for the rail vehicles and passengers. Consider structure deformations, including foundation settlement, for their effects on structural behavior and on trackwork. As a minimum, trackway piers and abutments settlement as measured at the top of concrete of the finished trackway girder deck shall be limited as prescribed in the *Geotechnical* chapter.

RFP No.: 13-57 – Addendum No. 5 - 10/09/2014

12.8.6.16 Superelevation on Structures

Superelevation of curved tracks shall be accomplished through the trackwork, refer to the *Trackwork* chapter. Girder decks shall maintain a level attitude transverse to the track with deck slope allowed only for drainage.

12.8.6.17 Walkways, Parapets, and Sound Walls

Loads on walkways shall be as described in Section 12.7.1.4. Walkways shall be precast or cast-in-place concrete. The walkway shall be on the cable trough cover and the walkway surface shall consist of a non-skid material. The cable trough cover shall be designed to resist loads described in Section 12.7. Walkways shall follow requirements on the Standard and Directive Drawings and as specified in the *System Safety and Security* chapter.

Parapets shall be provided along edges of bridges, aerial structures, and grade separations. Parapets shall be designed for wind loads, slipstream effects, and other loadings, as described in Section 12.5. Parapets shall be designed to accommodate installation of sound walls.

Parapets and safety railings shall be designed to withstand the forces described in Section 12.7.1.6. In locations where conduit risers are required along the alignment, parapets may be required to support conduits.

Temporary railings may be necessary to provide safety after girders are placed and before parapets are placed. Temporary railings shall meet the same requirements as safety railings. Temporary railings may be needed between construction contracts.

The height of sound walls shall be as defined in the Table 12-1. The structure and connection between parapet and structure deck shall be designed to resist the load combinations as described in Table 12-4 to accommodate installation of sound walls. No longitudinal gaps shall be permitted between the bottom of sound wall and the parapet or deck, nor any vertical gaps between adjacent sound wall panels.

12.8.6.18 Differential Foundation Settlements and Differential Vertical Displacements of Adjacent Substructures

Differential foundation settlements and differential vertical displacements of adjacent substructures alter the profile of HST tracks, which ultimately affect track performance.

Differential foundation settlements shall be calculated as described in the *Geotechnical* chapter.

Differential vertical displacements of adjacent substructures shall be calculated from the Service 1 load combination after completion of construction. Consideration of differential vertical displacements shall include, but is not limited to the following:

- Adjacent substructures founded on different foundation system, such as deep foundation with a shallow foundation adjacent to it. For this instance, the vertical displacement due to live load at the track level over the shallow foundation (smaller stiffness in general) can be greater than vertical displacement at the track level over the deep foundation (larger

RFP No.: 13-57 – Addendum No. 5 - 10/09/2014

stiffness in general), which results in differential vertical displacement between adjacent substructures.

- Adjacent substructures of different structural system, such as straddle bent with a single column bent adjacent to it. For this instance, vertical displacement due to live load or long-term camber growth due to creep and shrinkage of the cross beam elements can be generated at the track level over the straddle bent location while infinitesimal vertical displacement can be expected at the track level over the adjacent single column bent location, which results in differential vertical displacement between adjacent substructures.
- Adjacent substructures of different column heights of greater than 15 feet. For instance, the vertical elongation of a taller column due to uniform temperature effects can be greater than vertical elongation of a shorter column, which results in differential vertical displacement between adjacent substructures.

The combination of differential foundation settlements and differential vertical displacements of adjacent substructures shall be measured at top of deck, and shall not exceed the allowable settlement limits described in the *Geotechnical* chapter.

12.8.7 Complex and Non-Standard Structures

For the definition of complex and non-standard structures, refer to the *Seismic* chapter. The following specific requirements shall apply:

- Straddle and outrigger bents have cap beams that extend beyond the edges of superstructure toward columns located outside of the superstructure.
- The load path necessary to accommodate longitudinal actions of the superstructure shall be defined in a report and submitted with the Type Selection Report to the Authority, refer to Section 12.8.1.
- Torsion cracking in the primary load path is not permitted in concrete beam members. Compatibility torsion is allowed.
- Torsional rotation of concrete columns is not permitted under seismic actions when high bending and shear stresses occur.

12.8.8 Emergency Access/Egress Points

Emergency access/egress points shall be provided at intervals and in the manner specified in the *System Safety and Security* chapter. The safety gate shall be designed to resist wind and slipstream forces as described in Section 12.5 as well as live loads as described in Section 12.7.

12.8.9 OCS and Traction Power Facility Gantry Pole Supports

Girder decks shall be designed to accommodate OCS and Traction Power Facility Gantry pole supports. For loads and load combinations, refer to Section 12.5. Conduit or sleeves for future

RFP No.: 13-57 – Addendum No. 5 - 10/09/2014

conduit shall be provided from external power sources to the OCS and Traction Power Facility Gantry poles.

12.8.10 Maintenance of Primary Type 1 Bridges, Aerial Structures, and Grade Separations

Because of the large number of structures along the alignment, special care shall be taken in the design to reduce maintenance requirements. The following requirements shall apply:

- Reinforced or prestressed concrete structures are preferred over steel structures. As part of Type Selection per Section 12.8.1, the Designer shall justify the use of steel structures for each such structure, demonstrating the benefits of that steel structure.
- Bearings shall be easily accessible for inspection. They shall be adjustable and replaceable at any time during the life of the structure without disrupting train normal operations. Bearing replacement shall be completed within non-revenue service hours. During this period, train speed may be limited at locations where bearings are being replaced. The design documents shall provide a description of the procedures for bearing replacement, including the location of the jacks with safety nuts and a calculation of forces.
- Access arrangements for maintenance and inspection of exterior surfaces or equipment attached thereto shall be provided from the ground or from movable gantries. At intervals not greater than 300 feet and at 1 location in the case of a shorter isolated structure, 2.5 feet x 5 feet access openings with steel grating for inspection and maintenance shall be provided in the bottom slabs close to the expansion joint piers
- Wherever the diaphragm has sufficient depth a minimum opening of 5 feet in height and 6 feet in width shall be provided. If the depth of the diaphragm is limited, an opening of the largest possible size shall be provided, but not smaller than 3 feet in height and 6 feet in width.
- For tall and long structures where access openings in the bottom slabs are not feasible due to distance from the ground, a permanent access stairway, ladder, landing and platform from the ground shall be provided on each pier to allow for inspection and maintenance of bearings and potential column plastic hinge. The permanent stairway, ladder, landing and platform shall be designed to remain elastic for Extreme 3 load combination. A lifting hook capable of lifting 7,500 pounds shall be embedded and provided at locations near bearings and column plastic hinge and safely reachable by the maintenance crew for inspection and maintenance work. All the steel members of the permanent access stair shall be hot dip galvanized. The secure access control shall be provided at the entrance of the permanent access stair.
- If a pier is not accessible from the ground beneath (e.g., such as river crossing bridge), a 2.5 feet x 5 feet access opening with steel grating shall be provided in the bottom flange so that the pier top can be reached from the inside of the box girder. Adjacent to this opening, a work platform shall be provided at the pier top for the maintenance of bearings.

RFP No.: 13-57 – Addendum No. 5 - 10/09/2014

- In the design of bridges, the vertical load of the maintenance gantry on the deck overhang shall be taken into consideration. The maintenance gantry shall be represented by a line load of 30 kips over a length of 13 feet applied to the edge of the cantilever deck.
- A lifting hook capable of lifting 7,500 pounds shall be embedded in the underside of the superstructure top slab above each access opening. Access openings shall be equipped with lockable galvanized steel gratings.
- The box sections shall be vented by drains or screened vents at proper locations such as at the low point of the junction of the web and bottom flange, or at the corners of the blister to drain the water or prevent the build-up of the potential hazardous gas that might endanger inspection personnel. The minimum diameter of the vent holes shall be 2 inches and at placed at intervals not greater than 10 feet.
- Formworks inside the CIP hollow concrete section shall be removed for ease of inspection.

12.9 Design Considerations for Primary Type 2 and Secondary Structures

12.9.1 Primary Type 2 Structures

Where a highway, roadway, freight, pedestrian or utility structure spans over HST track and has the potential to affect HST service, the structure is classified as a Primary Type 2 structure. For the definition of Primary Type 2 structure, refer to the *Seismic* chapter.

12.9.1.1 New Primary Type 2 Structures

For seismic design of the above new Primary Type 2 structures, refer to the *Seismic* chapter. The static design of the above new Primary Type 2 structures shall meet the requirements of the Third Party that owns the structure and the following requirements:

- Caltrans Office of Special Funded Projects (OSFP) *Information and Procedures Guide for Planning Studies and Type Selection* shall be followed in order to obtain approval from the third party that owns the structure.
- Expansion joints and other features requiring routine maintenance shall be located outside the access controlled HST right-of-way.
- Foundations of abutments, columns, walls, and slopes shall be located outside the Authority's access restricted right-of-way.
- Horizontal and vertical clearances defined in the *Trackway Clearances* chapter shall be met.
- The requirements for intrusion protection barriers and screens defined in the *Rolling Stock and Vehicle Intrusion Protection* and *Overhead Contact System and Traction Power Return System* chapters shall be met. The loading due to the slipstream effects from passing trains shall be considered to occur in combination with wind load for design of the barriers and screens.
- The requirements defined in the *Grounding and Bonding Requirements* chapter shall be met.

RFP No.: 13-57 – Addendum No. 5 - 10/09/2014

- The applicable system interface requirements provided through system interface coordination shall apply.

12.9.1.2 Existing Primary Type 2 Structures

Based on the Rehabilitation Strategy Plan included in the Scope of Work, the Contractor shall repair and retrofit the existing Primary Type 2 structure to meet the requirements of the Third Party that owns the structure and the requirements for a new Primary Type 2 structure, as defined in Section 12.9.1.1.

12.9.2 Design Considerations for Secondary Structures

For the definition of Secondary structures, refer to the *Seismic* chapter.

Secondary structures shall meet the requirements of the third party that owns the structure, and the supplementary provisions specified in the CHSTP requirements.

12.10 Design Considerations for Earth Retaining Structures

Earth retaining structures shall be designed to withstand earth pressures and accommodate deformations in accordance with the *Geotechnical* chapter. Structural design of earth retaining structures such as reinforced concrete cantilever retaining walls, trenches, portal walls, and the like, shall follow the design requirements of AASHTO LRFD BDS with California Amendments.

Top of retaining walls, including fill, cut, and trench walls, shall be at least 1 foot above finish grade. Wall heights may be increased as required for flood elevation and intrusion protection requirements. Walls with Access Deterring (AD) or Access Restricting (AR) fencing, per the *Civil* chapter, shall be installed on top of the Earth Retaining Structures.

Earth retaining structure design shall provide a reserved clear area for future installation of each OCS pole foundation for no less than 25 feet vertically down from TOR. Reinforcement strips of MSE walls, tie rods, footings, and other supporting or foundation elements as well as conduits and other utilities shall not be allowed within the reserved area. The reserved area shall have a diameter of 5 feet coinciding with the center of each OCS pole foundation. The center of the reserved area shall be set at an equal longitudinal spacing of not more than 30 feet. For the transverse offset distance from the TCL, refer to the Standard and Directive Drawings or requirements provided through the system interface coordination. The reserved area on each side of the rail shall be directly opposite each other and perpendicular to the TCL. The longitudinal spacing from the centerline bearing of the structural abutment to the centerline of the future OCS pole foundation shall be equal to 1/2 of the equal spacing. The loads, load combinations, and limit states shown in Table 12-2 applied at top of low rail elevation shall be applied as part of live load surcharge (LLS) in the design of earth retaining structures.

Earth retaining structure design shall provide a reserved clear area for future installation of each traction power facility gantry pole foundation for no less than 25 feet vertically down from

RFP No.: 13-57 – Addendum No. 5 - 10/09/2014

TOR. Tie rods, footings, and other supporting or foundation elements as well as conduits and other utilities shall not be allowed within the reserved area. For locations and dimensions of the reserved area, refer to the Standard and Directive Drawings or requirements provided through the system interface coordination. The reserved area on each side of the rail shall be directly opposite each other and perpendicular to the TCL. The loads, load combinations, and limit states shown in Table 12-2 applied at top of low rail elevation shall be applied as part of live load surcharge (LLS) in the design of earth retaining structures.

12.10.1 Retaining Walls

Retaining walls shall be designed in accordance with requirements of the *Geotechnical* chapter. Retaining walls shall be constructed with expansion joints in walls a maximum of 96 feet apart. Weakened plane joints shall be a maximum of 24 feet apart. Design of reinforced concrete retaining walls shall follow requirements in AASHTO LRFD BDS with California Amendments. For design of the MSE wall, refer to section 12.10.2.

12.10.2 MSE Walls

Mechanically stabilized earth walls shall be designed in accordance with requirements of the *Geotechnical* chapter.

12.10.3 Trenches

Trenches are below grade structures with a retaining structure on both sides. Often the retaining structures are joined by a common reinforced concrete foundation. This form of trench, combined foundation, is also commonly called a U-section or U-wall. Waterproofing of the bottom of slab, and outside of walls is required if the top of concrete foundation slab is below the water table (refer to Section 12.11.3). For hydrostatic pressure (buoyancy), refer to Section 12.11.2.7.

Wall heights shall be based on flood and intrusion protection. The wall height shall be the greater of either 1 foot above finished grade or 2 feet above 100-year flood elevation where applicable.

Excavation support systems shall not be used as whole or part of the permanent walls.

12.10.4 Earth Retaining Structure Intrusion Protection

HST earth retaining structures shall be protected from errant highway vehicles and derailed trains as described in the *Rolling Stock and Vehicle Intrusion Protection* chapter, and as required in the following.

12.10.4.1 Highway Traffic Intrusion

HST earth retaining structures shall be protected by a continuous Caltrans type concrete barrier as specified in the *Rolling Stock and Vehicle Intrusion Protection* chapter. The wall shall be

RFP No.: 13-57 – Addendum No. 5 - 10/09/2014

designed for the force presented in AASHTO LRFD BDS with California Amendments Article 3.6.5.

12.10.4.2 Railroad Intrusion

HST earth retaining structures located adjacent to conventional railroad shall be protected as specified in the *Rolling Stock and Vehicle Intrusion Protection* chapter. Where an independent intrusion protection cannot be constructed due to limited space, the earth retaining structure (located adjacent to the conventional railroad), shall be constructed as described in *Rolling Stock and Vehicle Intrusion Protection* chapter and the wall shall be designed to resist collision loads presented in Section 12.5.2.14.

12.10.5 Struts

Struts may be used to support earth pressures in trenches. The height of struts shall have a minimum 27 feet vertical clearance from TOR and comply with the *Trackway Clearances* chapter.

12.10.6 Trench Drainage

Trenches shall be drained to the low point of sag curves. Sump pumps and an interconnected sump and pump room shall house the pumps. Earth pressures on the sump structure shall be as required in the geotechnical reports described in the *Geotechnical* chapter. Sump structures shall be waterproofed from ground water intrusion (refer to the *Drainage* chapter).

12.10.7 Trench Emergency Access/Egress Points

Emergency access/egress points shall be provided at intervals and in the manner specified in the *System Safety and Security* chapter.

12.11 Cut-and-Cover Structures

The criteria set forth in this section govern the static load design of cut-and-cover underground structures with the exception of pile foundations. Cut-and-cover structures include line structures, cross passages, sump pump structures, underground stations, vaults, ventilation structures, and other structures of similar nature. Portal and ventilation requirements and minimum cross sectional tunnel areas shall be as required in the *Tunnels* chapter.

The design of structures within the scope of this section shall be in accordance with the provisions set forth in the CHSTP design criteria and shall also meet the requirements of the AASHTO LRFD BDS with California Amendments, CBC, ACI, AISC and AWS, except where such requirements are in conflict with the CHSTP design criteria.

12.11.1 Structural System

The structural system for cut-and-cover line structures shall be single and/or multi-cell reinforced concrete box structures, with walls and slabs acting one-way in the transverse

RFP No.: 13-57 – Addendum No. 5 - 10/09/2014

direction to form a continuous frame. Excavation support systems shall not be used as whole or part of the permanent walls. Expansion or contraction joints are required at locations of major change in structural sections such as from line structure to station. Construction joints shall have continuous reinforcing steel, non-metallic waterstops and sealants.

12.11.2 Loads and Forces

Components of cut-and-cover structures shall be proportioned to withstand the applicable loads and forces described in Section 12.5.

Cut-and-cover structures shall, at minimum, be designed for the forces described herein.

12.11.2.1 Zone of Influence

Zone of Influence is defined as the area above a positive Line of Influence, which is a line from the critical point of substructure at a slope of 2 horizontal to positive 1 vertical (line sloping towards ground level) or the area below a negative Line of Influence, which is a line from the critical point of substructure at a slope of 2 horizontal to negative 1 vertical (line sloping away from ground level).

12.11.2.2 Future Traffic Loads

An area surcharge shall be applied at the ground surface both over and adjacent to underground structures to simulate potential future construction, railway, vehicular, and sidewalk loads as specified in Sections 12.11.2.3 through 12.11.2.5.

Such construction may result in permanent loads or temporary loads from construction equipment from the stockpiling of construction materials, or from the deposition of excavated earth. It is possible that loads such as those from hauling trucks, may be applied inadvertently to the underground structures due to their innate inconspicuousness.

12.11.2.3 Alternative Traffic Loading

For underground structures beneath or adjacent to operating railroads, vertical and lateral surcharge shall be based on the Cooper E-80, as defined by AREMA.

For underground structures adjacent to existing highway bridge overcrossings, vertical and lateral surcharge shall be based on the operating loads from the Contractor's equipment with a minimum surcharge loading equivalent to a 100-ton crawler crane.

For all other underground structures (i.e., not beneath or adjacent to operating railroads or highway bridge overcrossings), vertical and lateral surcharge shall be based on the HL-93 loading according to the AASHTO LRFD BDS with California Amendments. The distribution of the HL-93 loading shall be in accordance with the following:

- For fill heights ≤ 2 feet – the concentrated loads shall be applied directly to the top of the underground structure.

RFP No.: 13-57 – Addendum No. 5 - 10/09/2014

- For fill heights > 2 feet – the concentrated loads shall be distributed over a square area, the sides of which shall equal 1.75 times the depth of the fill.
- When distribution areas overlap, the total load shall be uniformly distributed over an area defined by the outside limits of the individual areas.

For design of the top slab of underground structures supporting the alternative traffic loading, impact loading (I) shall conform to AASHTO LRFD BDS with California Amendments Article 3.6.2.2.

The fill height shall be measured from the top of ground or pavement to the top of the underground structure.

12.11.2.4 Existing Structures

Existing structures that are to remain in place above underground structures shall either be underpinned in such a manner as to avoid increased load on the underground structure, or the underground structure shall be designed to support the existing structure directly. Third party structures supported directly on Primary Type 1 structures shall obtain a specific approval in writing by the Authority.

Underground structures shall be designed for additional loading from existing adjacent buildings or structures unless the existing structures are permanently underpinned or have existing foundations extending below the zone of influence.

An existing structure shall be considered to be adjacent to an underground structure when the horizontal distance from the building line to the nearest face of the underground structure is less than 2 times the depth of the underground structure invert below the building foundation.

Each adjacent existing structure shall be considered on an individual basis. In the absence of specific data for a given height of building and type of occupancy, applicable foundation loads shall be computed according to the CBC and the additional uniform lateral pressure on that portion of the underground structure sidewall below the elevation of the building foundation shall be provided in the geotechnical reports described in the *Geotechnical* chapter .

12.11.2.5 Requirements for Future Structures

Cut-and-cover structures shall be designed to accommodate future development when in close proximity to the HST right-of-way. Requirements are provided below for the default case. Additional requirements may be specified by the Authority at site specific locations.

A. <u>Clearance</u>

Structures over or adjacent to HST underground structures shall be designed and constructed so as not to impose any temporary or permanent adverse effects on underground structures. The minimum clearance between any part of the adjacent structures to the exterior face of underground substructure shall be 7 feet–6 inches. Minimum cover of 8 feet shall apply to the structures over or adjacent to HST underground structures.

RFP No.: 13-57 – Addendum No. 5 - 10/09/2014

B. Surcharge

Cut-and-cover structures shall be designed with an area surcharge applied at the ground surface both over and adjacent to the structures. The area surcharge is considered static uniform load with the following value:

D (feet)	Additional Average Vertical Loading (psf)
D>20	0
5<D<20	800-40D
D<5	600

Note: D is the vertical distance from the top of the underground structure roof to the ground surface.

C. Shoring

Shoring is required for excavations in the Zone of Influence, as defined in Section 12.11.2.1.

D. At-Rest Soil Condition

Refer to the geotechnical reports described in the *Geotechnical* chapter for soil loads and pressures needed for design.

E. Stress Redistribution

Refer to the geotechnical reports described in the *Geotechnical* chapter for stress redistribution caused by temporary shoring of the permanent foundation system.

F. Dewatering

Dewatering shall be monitored for changes in groundwater level. Recharging will be required if existing groundwater level is expected to drop more than 2 feet.

G. Piles Predrilled

Piles shall be predrilled to a minimum of 10 feet below the Line of Influence. Piles shall be driven in a sequence away from HST structures. No piles shall be allowed between steel-lined tunnels.

H. Vibration During Pile Driving

Underground structures shall be monitored for vibration during pile driving operations for piles within 100 feet of the structures. Tunnels shall also be monitored for movement and deformation. Requirements for monitoring shall be provided by the geotechnical reports described in the *Geotechnical* chapter.

I. Future Excavation Adjacent to Cut-and-Cover

The design of cut-and-cover structures shall consider an unbalanced lateral load condition due to possible future excavation or scour of 30 percent of total depth on 1 side of the structure. Under this condition the structures shall remain stable meeting CHSTP requirements.

RFP No.: 13-57 – Addendum No. 5 - 10/09/2014

12.11.2.6 Earth Pressure

A. Vertical Earth Pressure

Depth of cover shall be measured from the ground surface or roadway crown, or from the street grade, whichever is higher, to the top of underground structure surface. Saturated densities of soils shall be used to determine the vertical earth pressure. Recommended values shall be presented in the geotechnical reports described in the *Geotechnical* chapter.

B. Lateral Earth Pressure

For the purpose of these criteria, cut-and-cover box sections are defined as structures with stiff walls, which are restrained at the top so that the amount of deflection required to develop active pressure is not possible. Refer to the *Geotechnical* chapter for earth pressures required for design.

12.11.2.7 Hydrostatic Pressure (Buoyancy)

The effects of hydrostatic uplift pressure shall be considered whenever ground water is present. The hydrostatic uplift pressure is a function of the height of water table above the foundation plane, and shall be assumed uniformly distributed across the width of the foundation in proportion to the depth of the base slab below the design ground water table.

Structures shall be checked for both with and without buoyancy to determine the governing design condition. Maximum design flood levels shall be indicated in the Hydrology Report.

12.11.2.8 Flotation

For design flood levels and flood zone, refer to the Hydrology Report, if applicable.

Cut-and-cover structures subject to ground water table and/or located within the flood zone shall be checked and provided with adequate resistance to flotation.

No permanent dewatering system shall be assumed for the design of underground cut-and-cover structures.

A. Factor of Safety

The structure shall have a minimum factor of safety against flotation at any construction stage of 1.05, excluding any benefit from skin friction from perimeter of the structures.

The structure, when complete, shall have a minimum factor of safety against flotation during the 100-year flood level of 1.10, excluding skin friction resistance from perimeter of the structure.

The use of tiedowns, tension piles or other elements specifically designed to resist uplift forces shall be permitted and included in the flotation calculations. Refer to the *Geotechnical* chapter for other requirements for buoyancy resisting elements.

The dead weight of the structure used in the flotation calculations for the underground structures shall exclude the weight of each of the following:

RFP No.: 13-57 – Addendum No. 5 - 10/09/2014

- Any building above the structure
- Any live load internal or external to the structure
- Any loads that are not effective at the time
- Two feet of backfill over the roof except when checking against the 100-year and 500-year flood levels

12.11.2.9 Miscellaneous Loads

A. Walkway Cover Live Loads

Stationary and hinged cover assemblies shall be designed for the loads on walkways per Section 12.7.1.4. Deflection at center of span under 100 pounds per square foot uniform live load shall not be more than 1/8 inch. Hinged cover material shall comply with NFPA 130 requirements.

B. Live Loads and Equipment Loads for Ventilation Structures

Refer to Section 12.7 for roof and floor live loads and equipment loads for ventilation structures.

12.11.2.10 Seismic Design of Underground Structures

Refer to the *Geotechnical* chapter for the demand requirements for seismic design of tunnels and underground structures. If ductility is required to meet seismic demands in an underground structure, then the requirements provided in CSDC for lateral confinement reinforcing of concrete pier walls shall be satisfied.

12.11.2.11 Reinforced Concrete Underground Station Structures

Underground station structures and their appurtenant structural elements such as entrances shall be designed in accordance with AASHTO LRFD BDS with California Amendments and shall conform to the applicable requirements specified in Section 12.7.

Subsurface exploration shall be carried out to determine the presence and influence of geologic and environmental conditions that may affect the performance of station structures and reported by 1 or more geotechnical reports described in the *Geotechnical* chapter.

- Load combinations and load factors to be used are those shown in Table 12-4. The load resistant factors to be used are those provided by AASHTO LRFD BDS with Caltrans Amendments and their referenced AASHTO Tables 3.4.1-2, 3.4.1-3, and 12.5.5-1. In addition, the effects of EH, EV, ES, LLS, DD, DW, and WA shall be applied simultaneously in all their maximum and minimum values to produce the envelope of moment, torsion, shear, and axial force to produce the greatest demands to the structural framing. These load values shall cover the forces on the station structure at all phases of construction. Refer to AASHTO LRFD BDS with California Amendments Section 5.14.2.3.2.
- Final earth pressures and design assumptions for soil-structure interaction shall be provided by the geotechnical reports described in the *Geotechnical* chapter.

RFP No.: 13-57 – Addendum No. 5 - 10/09/2014

- Vertical pressure on foundation slabs shall be divided into hydrostatic and earth pressure components. The hydrostatic component shall be distributed across the width of the foundation in proportion to the depth of slab below the design groundwater table.
- Distribution of the earth pressure moment shall be based on specified construction procedures, and elastic and plastic subgrade reaction foundation effects provided by the geotechnical reports described in the *Geotechnical* chapter.
- For design, the horizontal earth pressure distribution diagram for multiple braced flexible walls shall be provided by the geotechnical reports described in the *Geotechnical* chapter. Compression forces shall not be considered in shear design of the top and bottom slab in box sections.

12.11.2.12 Reinforced Concrete for Cut-and-Cover Structures

Concrete for cut-and-cover structures shall be designed to attain the required chemical resistance to the environment, low permeability, water tightness and water absorption as specified in accordance with the Durability Report to meet the design life.

Concrete for cut-and-cover structures shall meet the requirements of the Standard Specifications, and the following minimum requirements:

- Strength – Minimum f'c shall be 4000 psi at 28 days.
- Proportioning Materials – The maximum water-cement ratio shall be 0.40 with 4.5 percent to 7.5 percent air entrainment.

12.11.2.13 Reinforcing Steel for Cut-and-Cover Structures

Reinforcing steel in structural components shall use U.S. Customary Units, meet the requirements of the Standard Specifications, and meet the following requirements:

- Use reinforcing steel conforming to ASTM designation A 706 Grade 60 (F_y=60 ksi).
- Use uncoated reinforcing steel and welded wire fabric when the concrete surface is not in contact with soil/water (or waterproofing).
- Use epoxy coated reinforcing steel meeting the requirements of the Standard Specifications for all permanent concrete members when the concrete surface is in contact with soil/water (or waterproofing).
- Spacing of main reinforcement shall not exceed 12 inches.

12.11.2.14 Camber

The tunnel roof shall be cambered to mitigate the effect of long-term loads (i.e., dead load plus vertical surcharge). The camber shall be calculated in accordance with the AASHTO LRFD BDS with California Amendments, Article 5.7.3.6. In computing the long-term deflection it shall be no less than the instantaneous deflection multiplied by a factor of 2.

RFP No.: 13-57 – Addendum No. 5 - 10/09/2014

12.11.3 Waterproofing of Underground Station Structures

Roofs, walls, and floors slabs of underground stations including auxiliary spaces except as otherwise noted, shall be waterproofed. To ensure adequate inspection and long term performance, no blind side waterproofing shall be used.

Provisions shall be made to collect and drain water potentially seeping through the roof, walls, or floor. The leakage through structural elements shall be limited to a maximum of 0.001 gallon per square foot of structure per day; no dripping or visible leakage from a single location shall be permitted.

The manufacturer and installer of the waterproofing system shall submit a list of a minimum of 5 successful projects of similar design and complexity completed within the past 5 years.

The Designer shall design for any openings or other penetrations through the waterproofing layer and for appropriate protection measures for the waterproofing membrane including the chamfering of corners of the structure, external protection, etc. Components of the waterproofing system shall comply with applicable Volatile Organic Compound (VOC) regulations.

12.11.3.1 Underground Station Structures

A. Roofs

Station roofs shall be completely waterproofed. Waterproofing and the boundary condition details at reglets and flashings shall be provided.

B. Walls

Exterior station walls shall be completely waterproofed. Mezzanine walls enclosing public areas and entrance walls shall be furred out, and provisions shall be made for collecting and draining seepage through these walls. The depth of the furring shall be governed by the space required for the placing of fare collection and other equipment, and architectural requirements, such as the minimum thickness of the wall finish. The fastening of the finish to the wall shall be such that water can drain off the walls freely and that it will not corrode the fasteners.

C. Floor Slabs

For station floor slabs, no special waterproofing provisions shall be made where the water can drain freely into the floor drainage system, and where such a leakage and drainage is not objectionable from a corrosion, operational, or visual standpoint.

Drainage shall be provided at public areas of the station floor slab.

D. Base Slabs

Waterproofing shall be applied under station base slab.

E. Appendages

Differential vertical movements of the station body and its appendages, such as wings or entrances at shafts, due to ground re-expansion as a result of returning of ground water, may

RFP No.: 13-57 – Addendum No. 5 - 10/09/2014

cause cracks at joints and other locations. Special attention shall be given to design detailing to mitigate this problem. Where such movements cannot be avoided, properly designed waterproof joints between such appendages and the station body shall be provided.

12.11.3.2 Cut-and-Cover Underground Trackway Structures

A. Cut-and-Cover Box

Exterior membrane waterproofing shall be applied to the outside of the cut-and-cover box as indicated on the Standard and Directive Drawings. Any seepage through the walls or the floor shall be carried away by the track drainage.

B. Transition Structure

For underground structure daylight transition structures, where U-sections or trenches with exposed sidewalls are used, special attention shall be given to controlling shrinkage cracks in sidewalls between construction joints.

C. Rooms

The following rooms or spaces shall be completely waterproofed, including all wall and roof surfaces in contact with the earth. Floor drains shall be provided. Refer to the *Mechanical* chapter.

- Electrical Rooms (includes spaces that house train control facilities, substation facilities, switchgear, ventilation fans, pumps, and other electrical equipment)
- Train Control and Auxiliary Equipment Rooms
- Substation , Switchgear, Fan Rooms, and Similar Equipment Rooms

D. Pump Rooms

Floor drains shall be provided to prevent the accumulation of seepage as required in the *Mechanical* chapter.

E. Cross-passages and Emergency Exits

Cross-passages and emergency exits shall be provided at intervals and in the manner specified in the *System Safety and Security* chapter

12.11.3.3 Waterstops and Sealants

Waterstops and sealants shall be used in construction joints in exterior walls, floors, and roofs.

12.11.3.4 Waterproofing Materials

Bentonite waterproofing shall not be used.

12.11.3.5 Water tightness

The cut-and-cover structure shall be designed and constructed so that it achieves a functional waterproofed underground structure for the duration of its design life. The design,

RFP No.: 13-57 – Addendum No. 5 - 10/09/2014

construction, and maintenance of the cut-and-cover structure shall meet the water-tightness criteria stipulated below at substantial completion and acceptance by the Authority:

- Local infiltrations limit 0.002 gallons per square foot of structure per day and no dripping or visible leakage from a single location shall be permitted.
- No drips shall be permitted overhead or where they have the potential to cause damage to equipment, malfunctioning of any electrical power, signaling, lighting, control, communication equipment, or compromise electrical clearances.
- A drainage system shall be provided to accommodate water infiltration as specified herein in accordance with tunnel and portal drainage.
- No water ingress shall cause entry of soil particles into the tunnel.
- No material used in preventing or stemming water ingress shall compromise the fire safety of the works or the durability of the structures in which they are used.
- Embedded electrical boards, electrical conduits, and other similar elements shall be completely waterproofed and watertight.
- The interface between cut-and-cover structure section with bored tunnel and other structures (e.g., building structures, emergency egress structures, etc.), shall be designed and constructed such that the joint between the 2 structures is fully watertight.

12.11.4 Water Holding and Conveyance Structures

Water conveyance or water holding structures that cross the HST alignment shall be designed to meet ACI 350 Code Requirements for Environmental Structures and Commentary with all Errata, and the seismic criteria in the seismic chapter. The jurisdiction owning or operating the facility may have additional requirements that shall be followed.

12.11.5 Shoring Support Systems

For specific requirements of soil loadings refer to the *Geotechnical* chapter. The design of shoring support systems shall consider several factors, including but not limited to, the following:

- Soil and groundwater conditions
- Width and depth of excavation
- Configuration of the structure to be constructed within the cut
- Size, foundation type and proximity of adjacent structures
- Utilities crossing the excavation, or adjacent to the excavation
- Requirements for traffic decking across the excavation
- Traffic and construction equipment surcharge adjacent to the excavation
- Settlements of adjacent structures

RFP No.: 13-57 – Addendum No. 5 - 10/09/2014

- Noise restrictions

12.11.6 Structural Fire Resistance

Underground structures can be exposed to extreme events such as fires resulting from incidents inside the structure. Underground structure design shall consider the effects of a fire on the concrete supporting elements. The concrete elements should be able to withstand the heat of the specified fire intensity and period of time given in the *Tunnels* chapter without loss of structural integrity. Protection from fire shall be determined by concrete cover on the reinforcing, additional finish, and special treatment of the concrete mixes.

12.12 Support and Underpinning of Structures

This section includes design requirements for the support and underpinning of existing structures to remain over or adjacent to new HST facilities that require construction below grade.

The Designer, in coordination with the Authority, shall investigate existing structures that are to remain over, or adjacent to, the construction sites of new HST facilities. The Designer shall prepare the necessary designs for the protection or permanent support and underpinning of such existing structures.

The types of buildings and structures that require support and underpinning include the following:

- Buildings and structures that extend over the HST structures to such an extent that they must be temporarily supported during construction and permanently underpinned.
- Buildings and structures immediately adjacent to the HST structures that will require temporary support during construction.
- Buildings and structures that are affected by groundwater lowering. In certain areas, uncontrolled lowering of the groundwater for HST construction can cause settlements of buildings either adjacent to or at some distance from HST excavations.

The design shall conform to the applicable requirements of the AASHTO LRFD BDS with California Amendments (where highway bridges are involved), AREMA (where railway bridges are involved), CBC (where buildings are involved), ACI, AISC, and AWS, except where such requirements conflict with the criteria.

12.12.1 Depth of Support Structures

Underpinning walls or piers that support buildings or other structures and that also form a portion of the excavation support system shall extend to a minimum depth of 2 feet below the bottom elevation of the excavation.

RFP No.: 13-57 – Addendum No. 5 - 10/09/2014

12.12.2 Methods

Methods used to protect or underpin buildings or other structures shall be given in the geotechnical reports described in the *Geotechnical* chapter.

12.12.2.1 Protection Wall Method of Structure Protection

Under light loading and favorable soil conditions, the supporting system for the excavation is sufficient to protect light structures. Under heavier loading conditions, a reinforced concrete cutoff wall, constructed in slurry-filled trenches or bored pile sections braced with preloaded struts, shall be considered as an alternative to underpinning or as a means to avoid settlement due to dewatering. The protection wall method of structure protection shall be provided in the geotechnical reports described in the *Geotechnical* chapter.

12.12.2.2 Stabilization of Soil

Soil stabilization techniques such as compaction grouting shall be considered as alternatives in lieu of underpinning. Refer to the *Geotechnical* chapter for soil stabilization requirements.

12.12.2.3 Temporary Bracing Systems

A properly designed temporary bracing system is important for the effectiveness of underpinning and for protection wall support. In addition to the general requirements for support of excavations, which are provided in the specifications, the special requirements for the installation and removal of the temporary bracing systems that relate to the designs of underpinning and protection walls, such as the levels of bracing tiers, the maximum distances of excavation below an installed brace, and the amount of preloading shall be indicated on the design drawings. The detailed design of the temporary bracing system shall be designed by the Contractor. Refer to the *Geotechnical* chapter for earth pressures information.

12.12.2.4 Pier, Pile, or Caisson Method of Underpinning

If soil conditions, structure size and proximity to an excavation dictate piers, piles or caissons for underpinning of an existing structure, such piers, piles, or caissons shall extend below a sloping plane, which is defined as follows: The plane passes through a horizontal line that is located 2 feet below the bottom of the excavation, and that is also located within the vertical plane containing the face of that excavation closest to the structure foundation to be underpinned; the plane shall slope upwards and away from the excavation at an inclination, which shall be established by the Designer, on a case-by-case basis. The supports shall be founded on stable soil mass and extended beyond the slope of the soil wedge failure plane. The pier, pile, or caisson method of underpinning shall be provided in the geotechnical reports described in the *Geotechnical* chapter. Refer to the *Geotechnical* chapter for soils information.

12.12.2.5 Seismic Design of Temporary Shoring and Underpinning

Seismic loads shall be considered in the design of temporary shoring and underpinning. Soil parameter shall be determined from the Geotechnical reports described in the *Geotechnical* chapter. For seismic demand spectra and performance requirements for temporary construction

RFP No.: 13-57 – Addendum No. 5 - 10/09/2014

structures, refer to the *Seismic* chapter. Shoring of excavations adjacent to developed facilities shall be required to maintain at-rest soil condition and monitored for movement.

12.13 Areas of Potential Explosion

Areas of new buildings adjacent to facilities where the public has access or that cannot be guaranteed as a secure area, such as parking garages and commercial storage and warehousing, shall be treated as areas of potential explosion.

NFPA 130, Standard for Fixed Guideway Transit and Passenger Rail Systems, life safety separation criteria shall be applied that assumes such spaces contain Class-I flammable or Class-II or Class-III combustible liquids. For structural and other considerations, separation and isolation for blast shall be treated the same as for seismic, and the more restrictive requirement shall be applied.

12.14 Structure Interface Issues

Design of structures shall accommodate the interface requirements as specified in the contract documents and the requirements provided through system interface workshop meetings.

12.14.1 Cable Trough

A cable trough shall be provided on both sides of the trackway. The cable trough shall be continuous through the entire system. The top of the cable trough shall be used as a safety walkway as a non-skid surface is provided.

12.14.2 Grounding and Bonding

Refer to the *Grounding and Bonding Requirements* chapter for grounding and bonding design of structures including, but not limited to the following:

- Bridges, aerial structures, and grade separations
- Trenches and retaining walls
- Cut-and-cover structures
- Buildings and support facilities
- New and existing third party structures
- Miscellaneous structures (e.g., cable trough, sound wall)

12.14.3 Drainage

Water shall be drained from the trackway and conveyed to the drainage system. Refer to the *Drainage* chapter for drainage requirements.

RFP No.: 13-57 – Addendum No. 5 - 10/09/2014

12.14.4 Conduit Risers

At traction power facilities, stand-alone radio sites and train control sites located at structures, provisions to accommodate a minimum cable and conduit weight of 350 pounds per linear foot shall be made for the installation of embedment of conduits, raceways and pull-boxes up the sides of specific columns, girders, and parapets of aerial structures, walls of earth retaining structures, and walls of cut-and-cover structures. For columns, girders and parapets, these provisions shall be located at 3 columns nearest to the site. For walls of earth retaining structures and walls of cut-and-cover structures, these provisions shall be made for a minimum length of 200 feet nearest to the site. Further, details shall be provided for the installations such that no damage results to the structures.

12.14.5 Embedded Conduits

Sleeves embedded in the slabs and webs of the aerial structures, cable troughs and parapet walls to provide routing for future electric cable installation shall be provided as specified in the contract documents and the requirements provided through system interface workshop meetings.

12.14.6 Trackside Equipment

Provisions shall be made to support trackside equipments. This equipment shall be located in line with the OCS poles.

12.14.7 Emergency Access/Egress Stairs

Emergency access/egress points shall be provided at intervals and in the manner specified in the *System Safety and Security* chapter.

12.14.8 Concrete Anchors

These criteria shall apply to anchors for overhead applications or any anchor subjected to sustained tensile loads where failure of the anchor could result in risk to life or limb.

Anchors shall be embedded in confined concrete. Length of embedment in unconfined concrete shall not be considered effective embedment length.

Use of adhesive anchors in overhead applications or in sustained tension is prohibited. Undercut anchors shall be used.

12.14.9 Utilities

For utility requirements affecting HST structures, refer to the *Utilities* chapter.

RFP No.: 13-57 – Addendum No. 5 - 10/09/2014

12.14.10 Field-drilled Anchors for OCS Pole and OCS Support Structures

The Contractor shall provide a minimum 6-inch reinforcement spacing for the installations of the future field-drilled anchors for OCS poles and OCS support structures either onto the top of the trench walls, retained fill walls, or onto the faces of the trench walls, retained fill walls, and the cut-and-cover structures.

RFP No.: 13-57 – Addendum No. 5 - 10/09/2014

Appendix

Design Terms

RFP No.: 13-57 – Addendum No. 5 - 10/09/2014

Revision	Date	Description
0	02 Mar 12	Initial Release, R0
1	Feb 2014	Revision 1

Design Terms

2x25 kV Autotransformer System: A Power Supply scheme for electrified railways that utilizes a Catenary energized at 25 kV to ground and an along track Negative Feeder also energized at 25 kV to ground. The 25 kV catenary and 25 kV negative feeder supplies are derived via connections to an Autotransformer or the secondary winding of a Main Transformer, which results in a phase difference of 180° between the voltages, giving 50 kV between the high voltage bushings.

A

Abandoned Mines: A collective term referring to the mapped or otherwise known presence of subsurface voids resulting from man-made mining or other subsurface tunneling activities.

Absolute Block: A section of track into which a train is not permitted to enter while it is occupied by another train, except as provided for by the rules.

Access Control: Restriction of access to or from a highway or railway right-of-way or facilities.

Access Control System: System which enables the Authority to control access to areas and resources in a physical facility or area.

Accessible Voltage: That part of the Rail Potential under operating conditions which can be bridged by persons, the conductive path being conventionally from hand to both feet through the body, or from hand to hand (horizontal distance of one meter to a touchable point).

Accessibility: The ease with which a site or facility may be reached by passengers and others necessary to the facility's intended function. Also, the extent to which a facility is usable by persons with disabilities, including wheelchair users.

Active Fault: A fault that has either known or is suspected of having had tectonic movement within Holocene time (past 11,000 years).

Administrative Telephone (ATEL): Telephones which provide fixed voice communications between Authority employees to conduct daily operations. Part of the Telephone and Intercom System (TIS).

RFP No.: 13-57 – Addendum No. 5 - 10/09/2014

Aerial Ground Wire:	*See Static Wire.*
Aerial Structure:	Trackway section placed on a structure, other than a culvert, which spans above earthen, paved, or water surfaces including roadways, railroads, and water channels. *Also, called elevated guideway.*
Aerodynamic Force:	In regard to pantograph, additional vertical force applied to the pantograph as a result of air flow around the pantograph assembly.
Alignment:	The horizontal and vertical route of a transportation corridor or path.
Ambient Noise Sensor:	Sensor which detects background noise to automatically adjust Public Address output level to maintain audible output level.
Ambient Temperature:	Outdoor air temperature measured with a thermometer (or other temperature measuring device) and located so that it is protected from direct sunlight and wind effects.
Americans with Disabilities Act (ADA):	Federal regulation establishing legal requirements for accessibility. The Act prohibits discrimination on the basis of disability in employment, State and local government, public accommodations, commercial facilities, transportation, and telecommunications.
Approximate Location:	In regard to underground facilities, the "approximate location of subsurface installations" being a strip of land not greater than 24 inches on either side of the exterior surface of the subsurface installation. "Approximate Location" does not define depth.
Arc:	(Electrical arc) Electrical discharge which breaks down the insulation characteristic of air, permitting current to jump across the space between two contacts.
Arcing:	In regard to pantograph, the flow of current through an air gap between a pantograph contact strip and the contact wire, which results in erosion of both elements and is usually indicated by the emission of intense light, and which can result in radio frequency interference.
Area of Impact:	The area of required utility construction or relocation due to the California High-Speed Train Project (CHSTP).

RFP No.: 13-57 – Addendum No. 5 - 10/09/2014

Area of Influence:	The area parallel to and 900 ft transverse to the centerline of the nearest track, or as defined in the Environmental Document, whichever is greater.
At-Grade:	At ground surface level; used to describe roadways, river crossings, and track alignments.
Attenuation Relationship:	Semi-empirical relationship to predict ground motions from a specific seismic source and event.
Attenuation Time:	The time required for the vehicle motion to stabilize after crossing a point of change in the nature of the alignment.
Aspect:	The appearance of a wayside signal, conveying an indication, as viewed from the direction of an approaching train; the appearance of an Onboard Cab Display as viewed in the cab.
Authority:	California High-Speed Rail Authority.
Authorized Person:	Any person who has been authorized by the Agency to enter restricted areas of the property.
Automatic Train Control (ATC):	The collective name for the train control subsystems that comprise the Automatic Train Protection, the Automatic Train Operation, and Automatic Train Supervision sets of functions that govern train operations on the main tracks.
Automatic Train Control Mode (ATC Mode):	A mode of operation which allows the Locomotive Engineer to control the acceleration and braking of a train subject to supervision of Automatic Train Protection.
Automatic Train Control Bypass Mode (ATC Bypass Mode):	A mode of operation which allows trains to proceed under the manual control of the engineer when there is an onboard ATC failure. Permission to break the ATC seal and enter this mode must be granted by the train dispatcher. Movement must not exceed the speeds prescribed by the operating rules and procedures.
Automatic Train Control – Automatic Train Operation Mode (ATC-ATO Mode):	A mode of operation in which the ATC system controls the acceleration and braking of a train subject to supervision of Automatic Train Protection.
Automatic Train Control Territory:	Territory equipped with Automatic Train Control (ATC) wayside equipment.

RFP No.: 13-57 – Addendum No. 5 - 10/09/2014

Automatic Train Operation (ATO): The functional set responsible for the automatic operation of throttle and brake commands to move trains between stations and other stopping locations (including those required due to the proximity of other trains and signal status) within the constraints imposed by the Automatic Train Protection functional set. Provides dwell timing at stations and the control or prompting of the opening and closing of train doors.

Automatic Train Protection (ATP): The functional set responsible for the safety-critical functions including those of interlocking, train detection, signal aspects, broken rail detection, hazard detectors (if implemented as part of the ATC system), and movement authorities (including speed limit and cab signal commands if appropriate) that are sent to the train and acted upon by the onboard train control to enforce safe limits. The ATP functional set includes the enforcement of the safety-critical functions. Positive Train Control functions are part of ATP.

Automatic Train Supervision (ATS): The functional set within the automatic train control system that is responsible for the centralized supervision and control of train movements; the ATS monitors trains, adjusts the performance of individual trains to maintain schedules, and provides data to adjust service to minimize inconveniences otherwise caused by irregularities. ATS also provides automatic and manual route setting at interlockings and the identification and tracking of trains, the display of alarms and events, and logging and storage of event data.

Autotransformer: Apparatus which helps boost the Overhead Contact System voltage and reduce the running rail return current in the 2x25 kV autotransformer feed configuration. It uses a single winding having three terminals. The intermediate terminal located at the midpoint of the winding is connected to the rail and the static wires, and the other two terminals are connected to the catenary and the negative feeder wires, respectively.

B

Backslope: Resultant excavation face located between outer shoulder line and natural ground line.

Back-of-House Area: Area dedicated to station operational and support functions, with access restricted to station employees.

RFP No.: 13-57 – Addendum No. 5 - 10/09/2014

Backwater:	An unnaturally high state in stream caused by obstruction or confinement of flow, as by a dam, a bridge, or a levee. Its measure is the excess of unnatural over natural stage, not the difference in state upstream and downstream from its cause.
Ballast:	A selected material, usually crushed rock without fines, placed in a track to hold its position, distribute weight, dissipate force, and provide drainage.
Ballasted Track:	Track constructed with ties supported by and normally embedded in ballast
Ballast-less Track:	*See Non-Ballasted Track.*
Barrier:	A device intended to contain or redirect an errant vehicle by providing a physical limitation through which a vehicle would not typically pass.
Barrier Offset Distance:	The lateral distance from the centerline of the track to the face of the barrier, trackside, or other roadside feature.
Base Flood:	The flood having a one percent chance of being equaled or exceeded in any given year. This is the regulatory standard also referred to as the "100-year flood".
Betterment:	Improvements to the capacity and/or functionality of a utility system that is not required for safety, operation, and construction of the California High-Speed Train (CHST) System.
Blanket:	A layer of coarse grained material between ballast and subgrade, spread over entire width. It may be required over the formation where the subgrade soil is of poor quality, rainfall is heavy, and traffic density is high, as the absence of blanket in such cases can lead to problems in service.
Block:	A length of track of defined limits on which train movements are governed by information provided by the Onboard Cab Display, by interlocking signals, or by authorized manual methods.
Blockage Ratio:	Ratio of train cross section area to tunnel cross section area.
Brake Horsepower:	Actual horsepower applied to a fan shaft by the motor.
Broadband Radio System:	Part of the Radio System, designed to transmit high-bandwidth data between moving high-speed trains and the fixed wayside.

RFP No.: 13-57 – Addendum No. 5 - 10/09/2014

C

Cab:	The location on a locomotive or high-speed train set from which the engine or train is operated by the locomotive engineer. The location on an Infrastructure Maintenance Vehicle from which on-track maintenance vehicle is operated by the driver.
Cable Infrastructure (CI):	The fiber optic and copper infrastructure and supporting equipment used to interconnect systems and field device equipment.
Cantilever:	In regard to Overhead Contact System (OCS), A frame for supporting and registering the OCS conductors, often including solid core insulators; for auto tensioned systems, the cantilever connections at the pole are hinged to accommodate along track movement of the conductors, thereby allowing the end of the cantilever away from the pole to swing.
Capable Fault:	A mapped or otherwise known Quaternary fault with evidence of Holocene displacement, structural relationship to related Holocene faults, and/or where data are not sufficient to rule out the presence of Holocene movement.
Casualty:	A serious injury or fatality.
Catenary:	An assembly of overhead wires consisting of, as a minimum, a messenger wire, carrying vertical hangers that support a solid contact wire which is the contact interface with operating electric train pantographs, and which supplies power from a central power source to an electrically-powered vehicle, such as a train.
Center Platform:	Passenger platform in-between two station tracks.
Closed Circuit Television (CCTV):	The use of video cameras to transmit a visual signal to specific places with limited viewing and recording.
Clothoid Spiral:	The most common type of spiral. The radius increases at a linear rate over the length of the spiral. *Also known as constant rate spiral.*
Code:	A type of legislation that purports to exhaustively cover a complete system of law on a specific subject matter to define a procedure or performance requirement.

RFP No.: 13-57 – Addendum No. 5 - 10/09/2014

Cohesive Subgrade: Subgrade constructed with soils having cohesive behavior, i.e., soils where shear strength is predominantly derived from cohesion of the soil is termed as cohesive subgrade. Normally, soils having particles finer than 75 micron exceeding 12% exhibit cohesive behavior. All fine grained soils and GM, GM-GC, GC, SM, SM-SC and SC types of soils exhibit cohesive behavior. Acronyms are from the Uniform Soil Classification System.

Cohesionless Subgrade: Subgrade constructed with cohesionless, coarse-grained soils, i.e., soils where shear strength is predominantly derived from internal friction of the soil and is termed as cohesionless subgrade. GW, GP, SW and SP types of soils fall in this category. Acronyms are from the Uniform Soil Classification System.

Communications Interface Cabinet (CIC): A stand alone cabinet containing racks used for Communications and Supervisory Control and Data Acquisition equipment.

Concourse: Open space for the gathering or passage of patrons.

Connectivity: Describes the degree of "connectedness" of a transportation system such as a transit network, and the ease with which passengers can move from one point to another within the network, or points outside the network.

Consist: A set of rolling stock that forms a train in service, a consist for HST can be a single trainset or more than one coupled together.

Constant Rate Spiral: *See clothoid spiral.*

Contact Force: The sum of forces for all contact points of one pantograph.

Contact Point: Point of mechanical contact between a pantograph contact strip and a contact wire.

Contact Wire: A solid grooved, bare aerial, overhead electrical conductor of an OCS that is suspended above the rail vehicles and which supplies the electrically powered vehicles with electrical energy through roof-mounted current collection equipment - pantographs - and with which the current collectors make direct electrical contact.

Contact Wire Height: Height of the underside of the contact wire above top of rail level when not uplifted by the pantograph of an electric train.

RFP No.: 13-57 – Addendum No. 5 - 10/09/2014

Containment: Engineered structure (steel, concrete or earthworks) designed to maintain a vehicle within a defined area.

Contours: A variable curve that connects points with the same elevation value used to depict surface elevations on a contour map.

Control: An established point on the earth's surface with a known position in the X, Y, Z coordinates and used for reference and mapping of field surveys.

Control Center: The location from which remote control signal appliances and switches are operated and operational decisions are made. On the CHST system these control centers are designated as:

- Operations Control Center (OCC) – The main control center that will have direct control of all main track operations outside those areas controlled by the Regional Control Centers and general supervisory oversight of all railroad operations system-wide.
- Regional Control Center (RCC) – Two RCCs, one each located in Northern and Southern California will have direct control of all main track operations on the Peninsula Corridor and LOSSAN Corridor, respectively.
- Yard Control Center (YCC) – The yard component of the Heavy Maintenance Facility (HMF) and the Terminal Storage and Maintenance Facilities (TSMF) will each have a YCC staffed by a yardmaster and a train dispatcher who will be jointly responsible for direct control of operations, including all remotely controlled signals and switches, within the limits of the yard.

Controlled Access: Refer to "Access Control".

Conventional Rail: Traditional intercity passenger rail services of more than 100 miles with as little as 1 to as many as 7-12 daily frequencies; may or may not have strong potential for future high-speed rail service. Top speeds of up to 79 mph generally on shared track. Intended to provide travel options and to develop the passenger rail market for further development in the future.

Counterpoise: A buried wire or a configuration of wires constituting a low resistance grounding system or portion of a grounding system.

RFP No.: 13-57 – Addendum No. 5 - 10/09/2014

Crossover: A pair of turnouts connecting parallel tracks.

Customer Assistance Intercom (CAI): Intercoms installed for passengers to report emergencies or obtain general travel information from local or remote Authority personnel. CAIs have two buttons for these two different functions. Part of the Telephone and Intercom System.

Customer Information Monitor: A visual information device that is full color and able to display detailed image information from the Public Address and Customer Information Sign (PACIS) system. Part of the PACIS system.

Customer Information Sign: A visual information device that is monochrome and able only to scroll text information from the Public Address and Customer Information Sign (PACIS) system. Part of the PACIS system.

Cut-and-Cover: Construction technique in which a trench is excavated, infrastructure is installed, and the trench is closed.

Cut and Fill: Construction technique involving excavation or grading followed by placement and compaction of fill material.

D

Datum: A reference from which measurements are made for establishing horizontal and vertical control.

Dead Load: Static Load that is relatively constant throughout the life of a structure.

Dedicated Corridor: A segment of right of way within the California High-Speed Train (CHST) System where the main tracks are used exclusively for High-Speed Train (HST) operations only, designated as such in the operating rules, and where these main tracks are completely separated physically from all other railroad tracks. The operation of trains (passenger and freight), other than the HST, over these tracks, is strictly prohibited in the operating rules and by regulation.

Dedicated Track: A main track designated in the operating rules for the exclusive use of CHST operations. All other train movements, passenger and freight, are prohibited and restricted by the operating rules and by regulation. It may or may not be in a Dedicated Corridor.

RFP No.: 13-57 – Addendum No. 5 - 10/09/2014

Degree of Curve:	The central angle turned by a curve in 100 feet. It is closely approximated by Dc = 5730 feet / Radius. Railroad curves are defined by the Chord Definition, in which the length is described by a 100 foot long tangent between two points on the arc of the curve. The exact formula for chord definition curves is Dc = 2 * arcsin (50 / Radius).
Derail:	A track safety device designed to guide a locomotive or car off the rails at a selected spot as a means of protection against collisions and other accidents.
Design Criteria:	The direction for design of the system. California High-Speed Train Project Design Criteria establishes requirements and guidelines for the design of CHSTP Infrastructure and Systems elements.
Design Frequency:	The recurrence interval for hydrologic events used for design purposes.
Design Life:	The projected period of time for which a design element will perform while meeting minimum specifications under a particular maintenance regimen.
Design Method:	Load and Resistance Factor Design (LRFD) methods are preferred for force based structural and geotechnical design.
Design Speed:	The maximum permissible speed along a segment of alignment based on the design specification of the track infrastructure, signaling system characteristics, and the maintenance specifications for that class of track.
Design Standards:	Refer to the *General* chapter for detailed explanation of Design Standard Classifications.
Design Storm:	That particular storm which contributes runoff which the drainage facilities were designed to handle.
Digital Terrain Model:	A three-dimensional model of digital surfaces of topographic features.
Directivity and Near Source Effects:	The effects of direction of fault rupture and closeness to the fault on ground motion.
Disconnect Switch:	A no-load interrupting type electrical switch for disconnecting electrical power from a line section.

RFP No.: 13-57 – Addendum No. 5 - 10/09/2014

Diverging Speed: Maximum speed for a train using the diverging route through a turnout.

Dual Control Switch: A power operated switch that may also be operated by hand. Dual control switches are found only within the limits of a yard.

Dwarf Signal: A low wayside signal with minimal preview that is used to provide adequate preview of the aspect displayed to high-speed trains.

Dwell: The time from wheel stop to wheel start of a train performing a scheduled stop at a station.

Dynamic Envelope: In regard to pantograph, a clearance envelope around the pantograph static profile that takes into account the pantograph sway and pantograph uplift under dynamic conditions.

In regard to vehicles and tracks, it is the trace of the maximum limits of movement of the vehicle in normal service. This outline is defined by the limits of motion due to wear of various components to their limits and includes deficiencies, such as deflated / overinflated airbags, etc. When defined from the perspective of the vehicle, it normally does not include any track deviations. When defined from the perspective of the infrastructure, track deviations are included. *Also called Kinematic Envelope.*

E

Earthwork: A general term applying to excavations and embankments, and the movement of soil and rock.

Electric Lock Switch: A hand-operated switch, typically restricted to yards, that is equipped with an electrically controlled device that restricts the movement of the switch.

Electrical Clearance – Dynamic (Passing): The minimum permissible clearance distance between the Overhead Contact System (OCS) messenger wire, contact wires, pantograph, or other live parts of either the vehicle or OCS and the grounded vehicle load gauge, overhead structure, or other adjacent fixed structure under dynamic operating conditions, such as during the passing of a train or the movement of the conductors due to heating or climatic conditions.

RFP No.: 13-57 – Addendum No. 5 - 10/09/2014

Electrical Clearance – Static:	Minimum clearance between live parts of either a vehicle pantograph or the Overhead Contact System, and grounded (earthed) parts of either a vehicle or adjacent fixed structure, while the vehicle and the live parts are stationary.
Electrical Clearance - Safety:	The distance in a straight line between a standing surface accessible to persons and energized parts necessary to prevent direct contact with energized parts, as defined in EN 50122-1: 1997 Section 5.
Electrical Section:	This is the entire section of the Overhead Contact System which, during normal system operation, is powered from a substation (SS) circuit breaker. The SS feed section is demarcated by the phase breaks of the supplying SS and by the phase breaks at the adjacent switching station or line end. An electrical section maybe subdivided into smaller elementary electrical sections.
Elementary Electrical Section:	This is the smallest section of the Overhead Contact System power distribution system that can be isolated from other sections or feeders of the system by means of disconnect switches and/or circuit breakers.
Electromagnetic Field (EMF):	The force field that extends outward from any moving electrical current, consisting of both a magnetic field and an electric field.
Electromagnetic Interference:	An electrical emission or disturbance that causes degradation in performance or results in malfunctions of electrical or electronic equipment, devices, or systems.
Emergency Intercom:	Intercoms installed for passengers to report emergencies and have a single button to perform this function. Part of the Telephone and Intercom System.
Emergency Telephone (ETEL):	Telephones adjacent to the motor-operated Overhead Contact System disconnect switches. These telephones are used by Authority staff to contact the Traction Electrification Power coordinator to report emergencies. Part of the Telephone and Intercom System.
Embankment or Fill:	In regard to earthwork for trackbed, artificial mound of imported material generally made of selected earth, gravel, or stone; built to support the HST when the reference line of the longitudinal profile is above the natural ground.

RFP No.: 13-57 – Addendum No. 5 - 10/09/2014

Entrance Facility: A room in a building where cabling terminates. Cabling may be Authority cabling, third party cabling, or both.

Epoch: As used in surveying, a specific date (time stamp) that all positions are based upon.

Equilibrium Superelevation: The calculated superelevation that exactly balances the lateral force of the train on the curve at the defined speed. Normally called Balancing Cant or Equilibrium Cant in European publications.

Erosion: The loosening, dissolving, or wearing away of earth materials in response to weathering, interaction with flowing water, wave action, or wind.

Exclusive Use Corridor: *See Dedicated Corridor.*

Expansive Soils: Soils that undergo swelling and shrinkage when wetted and dried.

F

Fail safe: For railroad related safety: A design principle the objective of which is to eliminate the hazardous effects of a failure of a component or system.

For non-railroad safety related design: A design feature that ensures that the system remains safe or in the event of a failure will cause the system to revert to a state which will not cause a mishap.

Fare Collection Line: Demarcation between Free Area and Paid Area.

Fare Gate Array: Physical barrier which requires a valid CHST ticket to pass.

Fare Gates: Physical barrier which requires a valid CHST ticket to pass. Also referred to as a Fare Gate Array.

Fault Hazard Zone: Overall zone within which deformations related to fault rupture may occur and should be considered in the design.

Feasible: Capable of being implemented.

Feeder: A current carrying electrical connection between the Overhead Contact System and a traction power facility (substations, switching stations, and paralleling stations).

RFP No.: 13-57 – Addendum No. 5 - 10/09/2014

Feeder Route:	Branch routes that feed into main (arterial) routes.
Fiber Optic Cable System:	A data transmission technology that relies on light rather than electricity, conveying data through a cable consisting of a central glass core surrounded by layers of plastic. Part of Cable Infrastructure.
Fire Alarm System (FAS):	System which monitors the station areas, control centers, facilities, and ancillary areas including spaces located within tunnels for fire; initiates alarms; activates the fire suppression systems; alerts the monitoring and response organizations to the incident; and assists in the fire emergency evacuation processes.
Flyover:	A bridge that carries one road or rail alignment aerially over another.
Footprint:	Area of the ground surface covered by a facility or affected by construction activities.
Foreslope:	In fill sections, the resultant slope of the fill that allows to safely support track and road subgrade and that places the subgrade at safe height above the maximum water and flooding level.
Formation:	It is a general term referring to the whole of blanket, subgrade, and subsoil.
Formation Top:	Boundary between ballast and top of blanket or subgrade (where blanket layer is not provided).
Free Area:	Areas within a station which are open to the general public.
Freeboard:	The vertical distance between the level of the water surface usually corresponding to the design flow and a point of interest such as a bridge beam, levee top or specific location.
Free Cross Section Area:	The standard tunnel cross section area excluding clearance for tunnel design details and fixed equipment.
Frequency:	The number of times a field, such as an electromagnetic field, changes direction in space each second. Also, the number of trains, flights, or other transportation service occurring in a given time period.

RFP No.: 13-57 – Addendum No. 5 - 10/09/2014

Frog (Turnout):

- Fixed Frog: Term essentially synonymous with Frog. "Fixed" is sometimes used as part of the name on railroad systems that also use spring frogs and swing nose frogs in order to clarify the type of frog used in a given situation.
- Spring Frog: A frog without a fixed open flangeway on one side between the frog point and wing rail that has springs holding that wing rail up against the frog point on that side so as to provide unbroken wheel support for the main track. The other wing rail is fixed. Main track traffic travels on the fixed wing side of the frog, not moving the frog. The wheels of diverging side traffic opens the sprung wing rail which is then forced closed by the spring after the wheel has passed. Spring frogs are either right handed or left handed. These devices are normally used only where the traffic on the side springing the wing rail is 20 percent or less of the total traffic over the frog. These devices are generally unknown outside North America.
- Swing Nose Frog: A frog in a turnout with a movable frog point connected to a switch machine for manipulation relative to the switch position.
- Point of Frog: In American terminology, the point where the gauge lines are 1/2 inch apart, or the point located one-half the distance in inches from the intersection of the gauge lines of the rails through the frog. In European terminology, the theoretical point of intersections of the gauge lines of the rails through the frog. The point, as defined in European terminology, is usually called the theoretical point of frog in American terminology.
- Heel of Frog: End of rails that are part of the frog assembly on the end away from the switch
- Toe of Frog: End of rails that are part of the frog assembly on the end toward the switch.
- A frog is commonly called a Crossing in European terminology.

RFP No.: 13-57 – Addendum No. 5 - 10/09/2014

G

Gantry: Portal frame spanning a railroad track or tracks for supporting and displaying signals, or installed parallel to the track(s) at traction power facilities (TPF) to support disconnect switches and for connecting feeder cables from the TPF to the Overhead Contact System.

Global System for Mobile Communications - Railway (GSM-R): An international wireless communications standard for railway communications. GSM-R is a sub-system of European Rail Traffic Management System (ERTMS). It is used for communication between train and railway regulation control centers for communication and control.

Geographic Information System (GIS): An information management system designed to store and analyze data referenced by spatial or geographic coordinates.

GEOID09: Gravimetric hybrid geoid height model developed by National Geodetic Survey (NGS) containing the separation between NAD83 and NAVD88 and is the basis for elevations (orthometric heights) using Global Position System (GPS) survey methods.

Geosynthetics: Structural elements made of synthetic materials for use in earthworks and construction of trackbed layers. A distinction is made between:

- Geotextiles: Geosynthetics (woven or non-woven), which may be used for separation, filtering, drainage and reinforcement.
- Geomembranes: Geosynthetics (synthetic or bituminous layer) impermeable to water, which may be used for protection of sensitive subgrade against penetration of surface water or for protecting ground water against pollution.
- Geogrids: Fine or coarse mesh geosynthetics, which may be used for separation and reinforcement.
- Geocomposite: Compound structure made of at least two layers of geosynthetic materials.

Global Positioning System (GPS): A space-based global navigation satellite system that provides location and time information in all weathers and at all times anywhere on or near the Earth when and where there is an unobstructed line of sight to four or more GPS satellites.

RFP No.: 13-57 – Addendum No. 5 - 10/09/2014

GPS Network Timing System (GNTS):	Timing system which provides accurate time-of-day synchronization to devices and systems within the CHST System. For example, wall clocks will be field devices of the GNTS.
Grade Crossing:	The intersection of a railroad and a highway at the same elevation (grade); an intersection of two or more highways; an intersection of two railroads.
Grade, Gradient:	The slope of changes in elevation, defined in percentage %, as feet of rise in 100 feet. Sometimes defined in European publication as millimeters of rise in one meter, in which case it is normally written as ‰.
Grade Separation Structures:	In respect to HST: • Underpass: HST passes under roadway or other railroad. • HST Overpass: HST passes over roadway or other railroad. • HST Aerial Structure: HST is elevated. HST passes over roadways, bikeways, and other railroads where they occur. • HST Bridge: HST passes over water feature. In respect to Roadway Structures: Refer to Caltrans Nomenclature.
Grade-Separated:	At different elevations; on separate levels.
Grid:	A system of interconnected power generators and power transmission lines that is managed to meet the requirements of electrical energy users connected to that transmission system at various points.
Ground Grid (Mat):	A buried grid for installations, such as substations and disconnect switch platforms, which provides a low resistance path to ground and reduces touch-and-step potentials for operators of the equipment.
Ground Potential Rise (GPR):	The maximum electric potential that a substation grounding grid may attain relative to a distant grounding point assumed to be at the potential of remote earth. The GPR is equal to the maximum grid current times the grid resistance to earth.

RFP No.: 13-57 – Addendum No. 5 - 10/09/2014

Ground Rod: A metal rod driven into the ground with ground wire connection to structures or equipment to disperse currents to ground (earth).

Ground Wire: A conductor installed for the purpose of providing electrical continuity between a device or equipment and a grounding system.

Grounded: Connected to earth through a ground connection or connections of sufficiently low impedance and having sufficient current-carrying capacity to limit the build-up of voltages to levels below that which may result in undue hazard to persons or to connected equipment.

Groundwater: Water contained and transmitted through open spaces within rock and sediment below the ground surface.

Guard Rail: A length of rail placed adjacent to the rail across from a frog to guide wheels through the frog. Some guard rails are fabricated from a special section produced for that purpose.

Guard Railing: A metal railing acting as a safety barrier at the side of a freeway, highway or road to prevent errant vehicles from leaving the traveled way.

Guideway: A track or riding surface that supports and physically guides vehicles specially designed to travel exclusively on it. For the CHSTP, use "trackway" in lieu of guideway.

Guidelines: Non-mandatory, recommended, and supplemental information regarding generally acceptable methods to satisfy provisions of a regulation, code, or standard.

H

Half-Sine Spiral: A spiral with a defined variation in the change of radius, usually in the form of a sine wave curve so as to reduce the entry and exit change in the rate of change. Recommended in high-speed operation, particularly if the track is on a concrete base. *Also called variable rate spiral.*

Hazard: Hazards encompass all aspects of technology or activities that produce risk. Hazards include the characteristics of things and the actions or inactions of people.

RFP No.: 13-57 – Addendum No. 5 - 10/09/2014

Hazardous Fault: A fault that meets the following criteria: ≥1.0 mm/year Slip Rate (SR) and/or ≤ 1,000 year Recurrence Interval (RI).

Hazardous Minerals: Naturally occurring minerals contained within soil or rock that contain minerals known to be harmful if inhaled, ingested, or in contact with skin.

Headspan: An across-track support arrangement comprising two or more wires that provide support for one or more OCS equipments. Headspans can be attached to two separated poles or to wayside buildings or other fixed structures.

Headway: The time between trains at a given point. For example, a 15-minute headway means that one train arrives, departs or passes every 15 minutes.

Heavy Maintenance Facility (HMF): A yard facility that provides overnight and mid-day rolling stock storage and Level 1 to 5 maintenance capabilities.

Help Point Intercom (HPI): Intercoms installed for passengers to communicate with Authority personnel to report emergencies and obtain general travel information. HPIs have two buttons for these two different functions. Part of the Telephone and Intercom System.

High Risk Utility: Utilities/Facilities conducting the following materials, whether encased or not, are considered to be High Risk:

- Petroleum products.
- Oxygen.
- Chlorine.
- Toxic or flammable gases or liquids.
- Natural gas in pipelines of any size.
- Underground electric supply lines, conductors or cables that have a potential to ground of more than 300 volts, either directly buried or in duct or conduit, which do not have concentric grounded or other effectively grounded metal shields or sheaths.
- Water in pressured pipeline 8 inches or greater in diameter or pipelines of any size with normal operating pressure greater than 80 psi.
- Other utilities that could disrupt the operation of CHST system.

RFP No.: 13-57 – Addendum No. 5 - 10/09/2014

High Signal:	A signal located such that its aspect can be detected by train operators sufficiently in advance of the time the train passes the signal such that the train operator can identify the aspect and take proper action by the time the train reaches the signal.
High-Speed Main Tracks:	*See main track.*
High-Speed Train (HST):	Train designed to operate safely and reliably at speeds near 200 mph (320 km/h).
High-Speed Railroad:	A railroad system utilizing steel-wheel-on-steel-rail technology with a regular operating speed greater than 125 mph (200 km/h).
Highway-Rail (Hi-Rail) Vehicle:	A type of Infrastructure Maintenance Vehicle equipped with both rubber tires and steel wheels allowing it to operate on either a highway or railroad track.
Holocene Fault:	Fault with most recent movement within the past 11,000 years.
Home Signal:	A signal (wayside or virtual) at the entrance to an interlocking to govern trains entering the interlocking.
Human Machine Interface (HMI):	The user interface to systems or equipment. It is the space where interaction between humans and machines occurs.
Hut:	Small self contained enclosure to protect and secure specialized equipment.

I

Impedance Bond:	An electrical device located between the rails consisting of a coil with a center tap used to bridge insulated rail joints in order to prevent track circuit energy from bridging the insulated joint while allowing the traction return current to bypass the insulated joint. The center tap can also be used to provide a connection from the rails to the static wire and/or traction power facilities for the traction return current.
Indication:	The information conveyed by the appearance of the Onboard Cab Display in the cab. The information conveyed by the aspect of a fixed wayside signal.
Infrastructure Maintenance Vehicle (IMV):	Infrastructure maintenance equipment operated on track for inspection or maintenance that may not shunt track circuits or operate signals.

RFP No.: 13-57 – Addendum No. 5 - 10/09/2014

Insulated Joint:	A joint in the running rail used to prevent track circuit energy on one side of the joint from leaking to the other side of the joint.
Insulated Overlap:	A sectionalizing point in the catenary formed by cutting insulation into the out-of-running conductors of the two adjoining and overlapping catenaries, having between them in the overlap span an electrical clearance realized by an air gap. The contact and messenger wires of these two overlapping tension lengths that terminate at opposite ends of the overlap section create a sectionalizing point in the catenary as required for operational and maintenance reasons, and permit the passage of pantographs under power from one energized electrical sub-section to the next, both supplied by the same traction power source.
Integrated Information Management Platform (IIMP):	Platform which integrates and leverages information from multiple stand-alone communications systems and other devices and systems for streamlined and coherent operation, monitoring, and control.
Interceptor Ditches:	Above a cut slope, they carry runoff from the watershed served and prevent surface runoff from entering the cut.
Interlocking:	An arrangement of signals (wayside and/or virtual) and switch appliances so interconnected that their movement must succeed each other in proper sequence and for which interlocking rules are in effect.
Interlocking Signals:	Fixed signals which govern the movement of trains through Interlockings that are observed by the train operator under Automatic Train Control failure conditions at reduced speed.
Intermediate Station:	Any station between two terminal stations. Intermediate HST stations will include additional tracks to allow for through running express services.
Intermodal:	Describes transportation that involves more than one means (walk, bike, auto, transit, taxi, train, bus, air, etc.) during a single journey.

RFP No.: 13-57 – Addendum No. 5 - 10/09/2014

Interoperability: In the context of the European High Speed Lines, the capability of the European High-Speed lines railway network to permit high speed trains to run safely and continuously with specified performances. It is based on legal, technical and operational conditions that must be fulfilled to satisfy the necessary requirements. Thus, for example, a German high-speed train satisfying the requirements of the Rolling Stock Technical Specification for Interoperability (TSI) is able to run safely and continuously on a French High-Speed Line, the infrastructure of which satisfies the requirements of the various infrastructure Technical Specifications for Interoperability. These TSI design standards were developed specifically for the design, construction and operation of interoperable high-speed railways in Europe and are based on European and international best practices.

Intrusion: Entry of errant vehicles, goods, objects and people into the operating space of HST or other transportation system. An errant vehicle's exit out of its right-of-way and entry into the operating space of another transportation system's right-of-way.

Intrusion Detection System: An electronic system that alerts the Control Center of an intrusion event and may result in train movement restriction.

Intrusion Protection: Physical structure or space which will prevent entry of errant vehicles, goods, objects, and people into the operating space of CHST or other transportation system.

Island Platform: *See Center Platform*.

K

Karst Terrain: A type of topography that is formed by subsurface dissolution of minerals, including mapped or otherwise known subsurface naturally occurring or man-induced voids.

Kiss-and-Ride: Facility for private vehicles to drop off or pick up CHST patrons.

L

Land Subsidence: The gradual downward settlement or sinking of the ground surface.

RFP No.: 13-57 – Addendum No. 5 - 10/09/2014

Landslide:	Mapped or otherwise known rock falls, mud flows, debris flows, landslides, and other forms of slope failures.
Lead (Turnout):	The distance from the actual point of switch to the 1/2 inch point of frog.
Level of Service (LOS):	A rating using qualitative measures that characterize operational conditions within a traffic stream and their perception by motorists and passengers.
Life Cycle:	All phases of the system's life including design, research, development, test and evaluation, production, deployment (inventory), operations and support, and disposal.
Line Side Drains:	Drains which collect and discharge surface water, seepage water, and ground water into a controlled outlet. Generally a distinction is made between buried drains, open channels, and side ditches.
Liquefaction:	Reduction of soil strength because of excess pore water pressure due to earthquake ground shaking when saturated.
Live:	An electrically energized circuit or component.
Live Load:	Load that varies due to dynamic factors within the normal operating cycle, but excluding seismic effects.
Live Part:	A part or component connected to an energized circuit and therefore live and not insulated from the energized circuit.
Local Area Network (LAN):	A network which provides network connectivity between terminals, servers, switches, sensors, and other electronic/optical equipment within a station or operational facility.
Longitudinal:	A facility located parallel to and within highway, existing railway, or proposed Authority right-of-way.
Low Risk Utility:	Facilities that are not covered under the definition for "High Risk Utility" are considered to be Low Risk Utilities.

RFP No.: 13-57 – Addendum No. 5 - 10/09/2014

M

Mainline:	In respect to CHST system, the mainline is the main route typically consisting of two main tracks. Mainline also includes passing track and station track. Mainline does not include maintenance sidings and yard track. *Also, main line, revenue tracks, and revenue service tracks.*
Main Track:	A track designated for the movement of trains at normal commercial speed having their movement protected by a control system. Tracks for the primary purpose of access to stations, yards, and other auxiliary facilities are not main tracks regardless of the presence or absence of movement protection system on those tracks. On CHST system, scheduled stops of any kind, including station stops will not normally be permitted on main tracks. On CHST system main tracks, all movements are protected by the Automatic Train Control system.
Maintenance:	Regular activities that are required to support safe operations and the intended use of the high-speed train system such as inspection and correction of deviations from the design along the track.
Maintenance Management Information System (MMIS):	A system that provides various management and statistical functions to support the users in organizing the planning of rolling stock maintenance work and providing the relevant information necessary for decision making.
Maintenance Siding:	A track dedicated to parking maintenance equipment and trains and normally connected to a passing track.
Major Utility:	Any subsurface, above ground, or overhead facility used for transmission, regardless of size, shape, or method of conveyance.
Maximum Considered Earthquake (MCE):	Ground motions corresponding to greater of (1) a probabilistic spectrum based upon a 10 percent probability of exceedance in 100 years (i.e., a return period of 950 years); and (2) a deterministic spectrum based upon the largest median response resulting from the maximum rupture (corresponding to M_{max}) of any fault in the vicinity of the structure.

RFP No.: 13-57 – Addendum No. 5 - 10/09/2014

Maximum Authorized Speed (MAS):	The highest speed that is permitted over a specific portion of the railroad alignment. It may be authorized by special instructions of the current timetable, operating rules, or any other publication authorized by the chief operating officer.
Maximum Contact Force:	The maximum value of the contact force exerted by the pantograph on the contact wire. *Sometimes, maximum force.*
Mean Contact Force:	The statistical mean value of the contact force exerted by the pantograph on the contact wire. *Sometimes, mean force.*
Medical Health Criterion:	Maximum pressure variation (peak-to-peak value) in the tunnel (outside of the train) independent of time.
Messenger Wire:	In catenary construction, the Overhead Contact System Messenger Wire is a longitudinal bare stranded conductor that physically supports the contact wire or wires either directly or indirectly by means of hangers or hanger clips and is electrically common with the contact wire(s).
Minimum Contact Force:	The minimum value of the contact force exerted by the pantograph on the contact wire. *Sometimes, minimum force.*
Minimum/Maximum:	*See Design Standards.*
Minor Utility:	Any subsurface, above ground, or overhead facility used as distribution lines or service laterals to individual parcels or properties
Modal:	A transportation system defined on the basis of specific rights-of-way, technologies, and operational features.
Movement Authority:	The vital information used by the onboard Automatic Train Control (ATC) system to determine the position on the track(or limit) to which the train can safely move under ATC supervision, including the speed limits both permanent and temporary that must be observed between its current position and the Movement Authority limit.

N

National Spatial Reference System (NSRS):	Datum, defined and managed by the National Geodetic Survey, and the foundation for the National Spatial Data Infrastructure (NSDI).

RFP No.: 13-57 – Addendum No. 5 - 10/09/2014

Negative Feeder (NF):	An overhead conductor supported on the same structure as the catenary conductors, which is at a voltage 25 kV with respect to ground but 180^0 out-of-phase with respect to the voltage on the catenary. Therefore, the voltage between the catenary conductors and the negative feeder is 50 kV nominal. The negative feeder connects successive feeding points, and is connected to one terminal of an autotransformer in the traction power facilities via a circuit breaker or disconnect switch. At these facilities, the other terminal of the autotransformer is connected to a catenary section or sections, via circuit breakers or disconnects.
Network Management System (NMS):	A system used to provision, test, and maintain network connectivity.
Neutral Leads:	The wires connecting the center tap of impedance bonds to other impedance bonds and/or to traction power ground circuits.
Neutral Section:	*See Phase Break.*
Nominal Voltage:	Voltage by which an installation or part of an installation is designated. The operating voltage of the Overhead Contact System may differ from the nominal voltage within defined permissible tolerances.
Non-Ballasted Track:	Rail lines installed over concrete slabs for support.
Non-operating Condition:	The environmental/climatic conditions under which trains will not be permitted to maintain continuous operation and revenue service will cease.
Non-public Area:	Station areas accessible only to station staff and secured against unauthorized entry with lockable doors.
Non-Vital:	A designation placed on a system, subsystem, element, component, or function denoting that satisfactory operation of such is not mandatory for safety.
North American Datum of 1983 (NAD 83):	The horizontal control datum for the United States based on the Geodetic Reference System 1980 and with a geocentric origin.
North American Vertical Datum of 1988 (NAVD 88):	The vertical control datum established for surveying elevations in the United States based on the General Adjustment of the North American Datum of 1988.

RFP No.: 13-57 – Addendum No. 5 - 10/09/2014

O

OCS Pole: Vertical structural element supporting the overhead contact system equipment, which provides physical support, registration and/or termination of the Overhead Contact System conductors including auxiliary wires.

Onboard Cab Display (OCD): Display located in the cab of a train or Infrastructure Maintenance Vehicle that displays to the locomotive engineer, or operator the current speed, allowed speed, approaching speed restrictions ahead within a defined distance, the required braking curve that must be adhered to in order to maintain schedule, and other necessary operating information. OCD provides the status of the Automatic Train Control system and the safe limits within which the train may operate. Generally OCD incorporates a group of displays including train radio, electronic timetable, control command, and technical and diagnostic displays.

Operating Basis Earthquake (OBE): Ground motions corresponding to a probabilistic spectrum based upon an 86 percent probability of exceedance in 100 years (i.e., a return period of 50 years).

Operating Condition: The environmental/climatic conditions under which trains will be permitted to maintain continuous operation, and for which the Overhead Contact System shall provide full, uninterrupted, and acceptable performance.

Operating Envelope: A zone delineated by HST tracks and Overhead Contact System.

Operating Infrastructure: Infrastructure that is required for HST operation. This includes infrastructure within operating envelope and other HST facilities such as traction power facilities, wayside power cubicles, train control rooms, communication rooms, and cable troughs.

Operations Radio System (ORS): The voice and low-bandwidth data radio system for wireless communications between onboard equipment, mobile and portable users, and fixed users and systems. (If an integrated vital and non-vital radio system is used, ORS may carry safety-critical train control data).

RFP No.: 13-57 – Addendum No. 5 - 10/09/2014

Operating Speed: The highest in-service speed that is achievable by a trainset technology on a segment of alignment that conforms to all of the requirements specified for that class of track. *See also Maximum Authorized Speed.*

Operations Control Center (OCC): *See Control Center.*

Outboard Platforms: Side boarding platforms located directly opposite one another, each serving one track.

Overhead Contact System (OCS): OCS is comprised of:

- The aerial supply system that delivers 2x25 kV traction power from substations to the pantographs of high-speed electric trains, comprising the catenary system, messenger and contact wires, stitch wires and hangers, associated supports and structures (including poles, portals, headspans and their foundations), manual and/or motor operated isolators, insulators, phase breaks, conductor termination and tensioning devices, downguys, and other overhead line hardware and fittings.
- Portions of the Traction Power Return System consisting of the negative feeders and aerial static wires, and their associated connections and cabling.

Overhead Contact Line Zone and Pantograph Zone: The zone whose limits, in general, are not exceeded by a broken overhead contact line in the event of a dewirement or by a damaged pantograph or broken fragments thereof which are energized.

Overlap: *See Uninsulated Overlap and Insulated Overlap.*

Owner: In the context of utility coordination, the owner of the underground or above ground utility or its authorized agent.

Ownership: Any interest in land, real estate, or the improvements on it.

P

Paid Area: Areas on the platform side of the fare-paid line where possession of a valid CHST ticket is required.

RFP No.: 13-57 – Addendum No. 5 - 10/09/2014

Pantograph:	Current collector apparatus consisting of spring-loaded hinged arms mounted on top of electrically powered rail vehicles that provides a sliding electrical contact and collects current from the contact wire of the overhead contact system. The pantograph is designed to follow changes in the vertical height and lateral offset of the contact wire, and to provide for essentially vertical movement of the pantograph collector head.
Pantograph Clearance Envelope:	A clearance envelope around the pantograph static profile.
Pantograph Current:	Current that flows through the pantograph.
Pantograph Head:	Pantograph equipment comprising the current collector strips and their mountings.
Pantograph Sway (Pantograph lateral displacement):	Lateral displacement of the pantograph induced, under the dynamic passage of the electric vehicle, by vehicle and pantograph lateral displacements that include gauge deviation, roll and lateral vehicle shock loads, and cross-track tolerance.
Parallel Feeder:	*See Negative Feeder.*
Paralleling Station (PS):	An installation which helps boost the Overhead Contact System (OCS) voltage and reduce the running rail return current by means of the autotransformer feed configuration. The negative feeders and the catenary conductors are connected to the two outer terminals of the autotransformer winding at this location with the center terminal connected to the traction return system. The OCS sections can be connected in parallel at PS locations.
Parcel:	A distinct, continuous portion or tract of land.
Park and Ride:	Facility where CHSTP patrons can park and leave personal vehicles prior to transfer to HST.
Passenger Aural Comfort Criteria:	Maximum pressure change inside the train within a specified period of time to limit the discomfort on passengers' ears when passing through a tunnel.

RFP No.: 13-57 – Addendum No. 5 - 10/09/2014

Passing Track: A designated track connected to a main track on both ends for the purpose of allowing a train to clear the main track as a part of normal operations, usually for the purpose of accessing a station platform, allowing train overtaking, or allowing trains to clear the main tracks to minimize delay in case of operational issues. For regulatory and signaling purposes the passing track is treated the same as a main track.

Peak Period: Time period during the day with the greatest volume of CHSTP patrons.

Performance Based Design: In regard to seismic design, a design based on specific performance criteria in addition to building code based safety criteria.

Performance Criteria: In regard to seismic design, for primary structures there are two levels of Performance Criteria:

- No Collapse Performance Level (NCL) for which structures are able to undergo the effects of the Maximum Considered Earthquake with no collapse. Significant damage may occur which requires extensive repair or complete replacement of some components. Occupants not on trains are able to evacuate safely. Damage and collapse due to train derailment is mitigated through containment design. If derailment occurs, train passenger and operators are able to evacuate derailed trains safely.
- Operating Performance Level (OPL) for which structures are able to withstand the effects of the Operating Basis Earthquake with elastic response with no spalling, and response within structural deformation limits, in order to limit rail stresses and protect against derailment. No derailment occurs; trains are able to safely brake from the maximum design speed to a safe stop; passengers and operators are able to evacuate stopped trains safely. Disruption of service for all systems supporting HST operations is minimal. Train operation resumes within a few hours and possibly at reduced speeds.

RFP No.: 13-57 – Addendum No. 5 - 10/09/2014

Phase Break:	An arrangement of insulators and grounded or non-energized wires or insulated overlaps, forming a neutral section, which is located between two sections of Overhead Contact System that are fed from different phases or at different frequencies or voltages, under which a pantograph may pass without shorting or bridging the phases, frequencies or voltages.
Photogrammetry:	The art, science, and technology of obtaining reliable information about physical objects and the environment through process of recording, measuring, and interpreting images and patterns of electromagnetic radiant energy and other phenomena.
Pick-Up and Drop-Off:	Facility for private and semi-private vehicles to drop off or pick up CHSTP patrons, which could include facilities for taxis, private shuttles, and rental cars.
Plat:	A plan or map of a plot of ground.
Platform:	Station area adjacent to tracks where trains stop to allow passengers to board and alight.
Portal:	*In regard to Overhead Contact System, see Portal Structure.*
Portal Structure:	An Overhead Contact System (OCS) structure consisting of a crossbeam or truss supported by two separate OCS poles usually placed to the outside of multiple tracks to support OCS conductors. OCS support brackets or drop pipes are attached to the beam or truss to support the OCS cantilever frames.
Positive Train Control (PTC):	FRA-mandated train control requirement that automatically enforces train separation, collision avoidance, speed restrictions, and movement authority. On CHST Automatic Train Protection fulfills this requirement.
Potentially Hazardous Fault:	Fault having known or documented Holocene activity or known Quarterly faults with suspected Holocene activity.
Pothole / Test Pit:	An excavation to expose an underground facility.
Power Operations Controller (POC):	The authorized person in a Control Center who is permitted to operate and control TES equipment through the Supervisory Control and Data Acquisition system and by voice commands to authorized field personnel and emergency response personnel, as applicable.

RFP No.: 13-57 – Addendum No. 5 - 10/09/2014

Power Transformer:	A device which transforms power on in ac system from one voltage level to another (e.g., from 115 kV to 25 kV).
Prepared Subgrade:	The upper layer of the subgrade is formed into a prepared subgrade layer, which normally has a cross slope. This layer is made of imported or treated material depending of the quality of the upper part of embankment or the bottom of the excavation. Its quality and compactness shall be better than the material below. Its function is to minimize the deformation of the upper part of the embankment or the bottom of the excavation and to prevent water that has passed through the subballast layer from penetrating to the earthwork below.
Pressure Comfort:	Conditions where there is no passenger ear discomfort due to pressure change.
Pressure Tightness Coefficient:	Time in which the difference between internal and external pressures upon a stepwise pressure change decrease from 100% to approximately 38% of the initial pressure difference.
Primary Type 1:	Primary Type 1 elements are those that directly support HST track. Refer to the *Seismic* chapter for detailed explanation of this general classification.
Primary Type 2:	Primary Type 2 elements are those that do not directly support HST track, but have the potential to affect HST service. Refer to the *Seismic* chapter for detailed explanation of this general classification.
Private Utility:	Utility infrastructure owned by a private corporation or public or private entities. They may not be regulated by the public or government agency.
Public Address and Customer Information Sign(PACIS) System:	System which provides synchronized audio and visual information to passengers and Authority personnel using Public Address speakers and Visual Signs.
Public Area:	Station free areas and paid areas, accessible to the general public.
Public Transportation:	Shared passenger transportation service available for use by the general public. Public transportation modes include buses, ferries, trolley buses, and various forms of rail transit including light rail, people movers, and grade separated "rapid transit" (metro/subways/elevated). Intercity public transportation includes airlines, buses, and intercity rail.

RFP No.: 13-57 – Addendum No. 5 - 10/09/2014

Public Utility: Utility infrastructure that are operated and maintained for public service. Public Utilities can be either publicly or privately owned and involve natural monopolies in sectors specially regulated by the California Public Utilities Commission.

Q

Qualified Analyst: In regard to seismic design, an individual with the knowledge of engineering seismology and at least 5 years of experience in performing site specific deterministic and probabilistic seismic hazard analyses (DSHA and PSHA) in California.

Qualified Person: In regard to Overhead Contact System (OCS) and Traction Electrification System (TES) equipment, an authorized person who has been trained in and has demonstrated adequate knowledge of the installation, construction, maintenance, and operation of the OCS lines and TES equipment and the hazards involved, including identification of and exposure to electric supply and communications lines and equipment in or near the workplace.

Quality Level: A level of accuracy scale used for identifying the location of underground and above ground utility facility information needed to develop capital projects, and for acquiring and managing that level of information during the project development process. Four Levels of Quality Measurement are used ranging from Level A to Level D.

Quaternary Fault: Fault with evidence of movement in the past 1.6 million years.

Queuing Area: Station area where passengers wait or line up to use a device or circulation element such as a ticket machine, fare gate, stair, elevator, or escalator. Queuing areas should be designed to accommodate waiting passengers without disrupting other passenger flows. Also, area provided to accommodate peak passenger surges.

R

Radio Frequency: The frequency range of the electromagnetic spectrum that is used for radio communication.

RFP No.: 13-57 – Addendum No. 5 - 10/09/2014

Radio System:	Communications systems which use radio propagation to transport voice and data between fixed entities and systems and mobile entities and systems.
Rail Shared Corridor:	*See Shared Rail Corridor.*
Rail Return:	The combination of track structure, jumpers, impedance bonds, grounds, and cables, each of which provides part of the electrical return path from the wheel-sets of the traction units to a substation.
Rail Potential:	The voltage between running rails and ground occurring both under operating conditions when the running rails are utilized for carrying the traction return current or under fault conditions.
Redundant Utility Supply Circuits:	A configuration of two supply circuits from the utility supply company that originate from different transformers or bus systems. Using redundant supplies will minimize the possibility that power to both circuits will be lost simultaneously.
Refuge Track:	A dead end track, normally connected to a station track, primarily for the purpose of temporary storage of a disabled train.
Regional Control Center (RCC):	*See Control Center.*
Regenerated Power:	Electrical power generated by electric vehicles when they brake by using their electric motors as electric generators.
Regulation:	A rule and administrative code issued by governmental agencies at all levels – federal, state, county, and municipal that impose specific requirements and at times mandate permits or approvals by the agency (generally to ensure health and safety of the public). Although regulations are not laws, they have the force of law as they are adopted under authority granted by statutes.
Relocations:	The removal, rearrangement, and reinstallation of a utility facility required by a transportation improvement project.
Response Spectrum:	The response of damped single degree of freedom oscillators to an earthquake time history.
Restricted Area:	An area for which a railroad agency has responsibility and to which access is permitted only to authorized persons.

RFP No.: 13-57 – Addendum No. 5 - 10/09/2014

Restricted Manual Mode:	A mode of operation, enforced by the Automatic Train Control (ATC) system, which allows trains to proceed under the manual control of the locomotive engineer when there is an ATC malfunction. Permission to enter Restricted Manual mode must be granted by the train dispatcher. Movement must be at Restricted Speed subject to the prescribed operating rules and procedures.
Restricted Speed:	A speed, not exceeding 20 mph, at which it is possible to stop within one half the range of vision, short of the next signal, another train, obstruction, or derail, while looking out for broken rail or switch not properly lined.
Retained Cut:	Trackway section where tracks are placed uncovered, below existing ground level and where adjacent soil is supported with retaining walls above top of rail elevation.
Retained Fill:	Trackway section where tracks are placed on embankment material contained by retaining walls above existing ground.
Return Circuit (Return System):	*See Traction Power Return System.*
Reverse Curve:	Section of the horizontal alignment of the trackway in which a curve to the left or right is followed immediately by a curve in the opposite direction.
Richter Scale:	A logarithmic scale measuring the severity of earthquakes, based on the magnitude of ground motion.
Ridership:	Number of passengers using CHST System over a certain period of time.
Right-of-Way:	A legal right of passage over a defined area of real property used for highway, railway, public utility services, or other purposes. In transportation usage, refers to the corridor along a roadway or track alignment that is controlled by a transit or transportation agency/authority and is usually the access control line.
Risk:	In the consideration of hazards and vulnerabilities, a measure of the combined probability and severity of potential harm to one or more resources as a consequence of exposure to one or more hazards.

RFP No.: 13-57 – Addendum No. 5 - 10/09/2014

Rolling Stock: Wheeled railway vehicles.

Rules: Operating requirements found in the Code of Operating Rules, Special Instructions or other authorized CHST System publications.

S

Safe Braking: A set of design provisions and procedures which together ensure that a train's Automatic Train Protection stopping distance is safe in normal conditions and in all likely combinations of adverse factors and failure conditions.

Safe Point Intercom (SPI): Intercom stations targeted for passengers to report emergencies only and have a single button to actuate this function. Part of the Telephone and Intercom System.

Safety: The control of recognized hazards to achieve an acceptable level of risk.

Scale: A graduated line representing a proportionate size.

Sealing Characteristics: The capacity of the train to limit inside pressure change within given limits.

Secondary: Secondary elements are those not designated as Primary Type 1 or Primary Type 2. Refer to the *Seismic* chapter, for detailed explanation of this general classification. *Also called Secondary Structures.*

Section Insulator: A mechanical sectionalizing device installed in the overhead catenary providing electrical separation between two adjacent catenary sub-sections both energized by the same traction power supply source which permits the passage of pantographs under power from one energized electrical sub-section to the next.

Security: A means, active or passive, that serves to protect and preserve an environment and allows for the conduct of activities within an organization or society without disruption.

Seismic Hazards: Earthquake-induced conditions such as vibratory ground motion, liquefaction, lateral spreading, dynamic compaction, seismically-induced slope failures, and ground rupture.

RFP No.: 13-57 – Addendum No. 5 - 10/09/2014

Seismic Source Model: The geographic distribution of potential seismic sources that could affect the seismic ground motion at a particular site.

Service: The portion of the electric, gas, water, sewer, or communication system that connects a customer, usually at the meter location, to the utility distribution or supply system.

Side Platforms: Station area adjacent to a single track for the purpose of passenger boarding and alighting.

Shared Corridor: A portion of high-speed rail alignment where the high-speed trains operate on their own dedicated tracks parallel to and in the vicinity of other transportation systems such as highways, passenger railroads, or freight railroads.

Shared Rail Corridor: A type of Shared Corridor in which the other transportation systems are other railroads which may include passengers and freight.

Shared Track: A track designated in the operating rules for the operation of both the high-speed trains and other passenger or freight trains. Shared Track shall have time separation between the hours of operation of freight trains and the high-speed trains (temporal separation). *Sometimes referred to as Shared Use Track.*

Shop Track: A designated track in a yard facility used for the maintenance or repair of rolling stock which is under the exclusive control of the Rolling Stock Maintenance employee in charge.

Signal Aspect: *See Aspect.*

Signal Block: *See Block.*

Signal Indication: *See Indication.*

Site Effects/Site Class: The effect of the subsurface soil/rock profile on the seismic ground motion and as classified in the California Building Code.

Sleeve: A pipe in which a pipeline or conduit is inserted. *Also, called casing.*

Slope Failures: Mapped or otherwise known slope failures such as rock falls, mud flows, debris flows, landslides, and other forms of slope failures.

Slope Stability: The ability of slopes to resist movement.

RFP No.: 13-57 – Addendum No. 5 - 10/09/2014

Slope Value:	Slopes are defined as a fraction indicating the number of units of horizontal length required to achieve 1 unit of vertical distance, i.e., 2H:1V means the slope raises 1 unit vertically for 2 units of horizontal length.
Sound Powered Telephone (SPT):	A telephone system requiring no power, used for first responders in tunnels. Part of the Telephone and Intercom System.
Span Length:	In regard to Overhead Contact System (OCS), the distance between two consecutive OCS support points.
Spiral:	Curve of variable radius used to connect a straight section of track with the radius of the body of the curve. *Sometimes called a Transition or a Transition Spiral*.
Stagger:	Offset of the contact wire from the projected or super-elevated track centerline at each registration point that causes the contact wire to sweep side to side over the pantograph head during vehicle operation and which helps to distribute wear over the pantograph carbon collector strips.
Standard:	Uniform criteria, methods, processes and practices developed by a regulatory body, agency, industry association, or organizations such as trade unions and trade associations, or other professional affiliations, that represent accepted requirement or a benchmark to measure against.
Static Contact Force:	The mean vertical force exerted upward by the collector head on the overhead contact line, and caused by the pantograph-raising device, while the pantograph is raised and the vehicle is at standstill. *See also Contact Force.*
Static Gauge:	The maximum outline to which a vehicle may be fabricated. It will include only manufacturing tolerances.

RFP No.: 13-57 – Addendum No. 5 - 10/09/2014

Static Wire:	A wire, usually installed aerially adjacent to or above the catenary conductors and negative feeders, that connects Overhead Contact System (OCS) supports collectively to ground or to the grounded running rails to protect people and installations in case of an electrical fault. In an ac electrification system, the Static Wire forms part of the traction power return circuit and is connected to the running rails at periodic intervals and to the traction power facility ground grids. If mounted aerially, the static wire may also be used to protect the OCS against lightning strikes. *Sometimes termed Aerial Ground Wire.*
Station:	Areas within a station building envelope. Also, a place designated by name on the station pages of the current Timetable.
Station Intercom:	Intercoms which allow the station attendant to communicate with passengers at fare collection equipment, fare-barrier equipment, or through protective glass. Part of the Telephone and Intercom System.
Station Track / Platform Track:	A track for the purpose of bringing a train alongside a station platform for a stop to embark / disembark passengers.
Steady Arm:	A lightly loaded registration arm that serves to hold or steady the contact wire at its correct lateral displacement/stagger.
Step Voltage:	The difference in surface potential experienced by a person bridging a distance of 1 m (3′-3″) with the feet without contacting any ground object.
Structure Gauge:	The outline defining the minimum distance from track centerline to various features.
Stub End:	A track that terminates at one end.
Subballast Layer:	An intermediate layer situated between the ballast and the subgrade layers. It protects the top of the embankment against erosion, ensures a better distribution of loads, and provides a leveled surface suitable for track laying. Subballast is made up of full crushed graduate gravel. This layer is referred to as the Blanket Layer in the International Union of Railways (Union Internationale des Chemins de Fer) (UIC) standards.

RFP No.: 13-57 – Addendum No. 5 - 10/09/2014

Subgrade:	The top layer of earthwork upon which the subballast layer rests. On an embankment, the subgrade will be formed of imported soil, whereas in a cut, it will be the naturally occurring soil.
Subsidence:	The gradual downward settlement or sinking of the ground surface.
Subsoil:	Soil of natural ground below subgrade.
Substation (SS):	An electrical installation where power is received at high voltage and transformed to the voltage and characteristics required at the catenary and negative feeders for the nominal 2x25 kV system, containing equipment such as transformers, circuit breakers and sectionalizing switches. It also includes the incoming high voltage lines from the power supply utility.
Subsystem:	A grouping of items satisfying a logical group of functions within a particular system. An element of a system that, in itself may constitute a system. In regard to HST, refers to the major operational part of the high-speed rail system, i.e. infrastructure, rolling stock, train control, electrification, operations, and maintenance.
Superelevation:	The difference in elevation between the outside rail of the curve and the inside rail of the curve measured between the highest point on each rail head. Normally called Cant in European publications.
Supervisory Control and Data Acquisition (SCADA) System:	System which provides centralized control and monitoring of multiple CHST systems.
Switching Station (SWS):	An installation at which electrical energy can be supplied to an adjacent, but normally separated electrical section during contingency power supply conditions. It also acts as a paralleling station.

RFP No.: 13-57 – Addendum No. 5 - 10/09/2014

Switch (Turnout): The component of a Turnout consisting of switch rails and connecting parts providing a means for making a path over which to transfer rolling stock from one track to another.

- Split Switch: Synonymous with Switch on modern railroads.
- Secant Point Switch: A switch point in which the arc of the radius of the switch rail or the turnout itself crosses the gauge line of the stock rail. American standard switch rails are Secant Point Switches.
- Tangent Point Switch: A switch point in which the arc of the radius of the switch rail or the turnout itself matches the gauge line of the stock rail. European and most other turnouts are designed to be Tangent Point Switches.

System: Grouping of items satisfying a logical group of functions.

System Height: The vertical distance between the messenger and contact wires, at the support structure. *Also known as System Depth.*

System Safety Engineering: An engineering discipline that employs specialized professional knowledge and skills in applying scientific and engineering principles, criteria, and techniques to identify and eliminate hazards, in order to reduce the associated mishap risk.

T

Telephone and Intercom System (TIS): The system which provides mission critical voice communication functions for Authority personnel, Authority police personnel, third party emergency responders, and passengers.

Tension Length: Length of a catenary section between its two termination points. *Also known as Tension Section.*

Tensioning Device: An assembly, typically placed at each end of a tension length, which comprises a balance weight arrangement that is used to maintain near-constant mechanical tension in one or more conductors of an auto-tensioned catenary.

RFP No.: 13-57 – Addendum No. 5 - 10/09/2014

Terminal Control Facility (TCF):	A control center located at terminal stations that will have immediate supervisory oversight over train and passenger operations within each specific terminal. TCF personnel will ensure that appropriate information is relayed to passengers either automatically or manually, and directly manage the station facility and operations on a local level. Actual dispatching of trains will be controlled by mainline dispatchers at the Operations Control Center or Regional Control Centers who will interface closely with TCF personnel.
Terminal Station:	The first or last station of a passenger rail route.
Terminal Storage and Maintenance Facility (TSMF):	A yard facility located near a terminal that provides overnight and mid-day rolling stock storage and Level 1 to 3 maintenance capabilities.
Ties or Sleepers:	Beams placed horizontally and laid perpendicularly to the rail to hold the rails to gauge, distribute the load of the track and equipment to the underlying support, and hold the track in horizontal and vertical alignment. Ties are normally between 8 feet and 8.5 feet long, except those supporting turnouts may be up to 16 feet long. The material normally used in CHST track will be concrete, but ties may be of wood in yard turnouts and certain other special cases.
Time History:	The values of acceleration, velocity, or displacement with time for an earthquake.
Top of Rail:	Refers to the top of the rail on the track which defines the profile elevations of the track. On curves with superelevation, it is the top of the inside rail, also commonly called the top of low rail.
Topographic Map:	A map of the features of the surface of the earth considered collectively as to form.
Touch Voltage:	The potential difference between the ground potential rise (GPR) and the surface potential at the point where a person is standing while at the same time having a hand in contact with a grounded structure (Per IEEE-80).

RFP No.: 13-57 – Addendum No. 5 - 10/09/2014

Trackbed Layers:	General term that includes the material imported for the foundation of the track. It includes the ballast and the following elements when present: • Subballast layer • Prepared subgrade • Geosynthetics
Track Centerline:	The line equidistant between the inside faces of the rail heads of a track.
Track Centers:	Distance between adjacent track centerlines.
Track Circuit:	A method of determining occupancy of a section of track and/or a broken rail by sending an electrical signal down the track from the transmit end to the receive end of the section of track, which indicates that the section of track is complete and not occupied by a train by detecting a minimum level of the proper signal at the receive end.
Track Formation Level:	Surface intended to receive the trackbed layers.
Track Foundation:	Constitutes ballast, blanket, and subgrade which is placed/exists below track structure to transmit load to subsoil.
Track Gauge:	Distance between the inner side of the rail heads.
Traction Electrification System (TES):	The combination of the Traction Power Supply System and the Overhead Contact System together with the traction power return system, a Supervisory Control and Data Acquisition system, which forms a fully functional system, and which provides the electrical energy to the electrically powered vehicles on the CHST railway line.
Traction Power Facilities (TPF):	A general term that encompasses substations, switching stations, and paralleling stations.

RFP No.: 13-57 – Addendum No. 5 - 10/09/2014

Traction Power Return System:

All conductors, including the grounding system for the electrified railway tracks, which form the intended path for the traction return current from the wheel-sets of the traction units to the substations under normal operating conditions and the total current under fault conditions. The conductors may be of the following types:

- running rails
- impedance bonds
- static wires, and buried ground or return conductors
- rail and track bonds
- return cables, including all return circuit bonding and grounding interconnections
- earth

and, as a consequence of the configuration of the autotransformer connections, the negative feeders.

Traction Power Supply System (TPS):

The railway electrical distribution network used to provide energy to high-speed electric trains, which comprises three types of traction power facilities in addition to connections to the Overhead Contact System and the Traction Power Return System:

- Substations (SS),
- Switching Stations (SWS), and
- Paralleling Stations (PS)

Traffic Locking:

The enforcement of a single direction of operation in a track section.

Train Control and Communications Room (TCCR):

An equipment room that houses all electronics, power, and networking necessary for the Train Control and communications functions.

Trainset:

A minimum set of rolling stock that can operate in service.

Transition Rate (with distance):

The rate at which superelevation or unbalanced superelevation is placed in track, usually stated as feet per inch, or a ratio.

Transition Rate (with time):

The rate at which superelevation or unbalanced superelevation is experienced with time at a defined speed. Units are normally seconds per inch.

RFP No.: 13-57 – Addendum No. 5 - 10/09/2014

Transition Track: A designated track connecting the main track to a yard facility designed to allow trains to safely reduce from and accelerate to main track speed. Automatic Train Control (ATC) rules are in effect on transition tracks. Movements will be governed by speed displayed on the Onboard Cab Display, unless the train is in ATC Bypass mode, in which case it will proceed at Restricted Speed.

Transportation Demand Management: The operation and coordination of various transportation system policies and programs to manage travel demand to make the most efficient and effective use of existing transportation services and facilities.

Transportation System Management: Actions that improve the operation and coordination transportation services and facilities to realize the most efficient use of the existing transportation system.

Transverse: A facility passing from one side of the right-of-way to the other side of the right-of-way.

Travel Time: The time spent on a train from a place of origin to a place of destination.

Trolley Wire: Alternative term for contact wire used for single wire Overhead Contact System. *See Contact Wire*.

Tsunamis: Waves that travel in the open ocean and are caused by an undersea earthquake, landslide, or volcanic activity.

Turnout: Mechanical installation enabling trains to be guided from one track to another.

U

Unbalance, Unbalanced Superelevation: The difference between the Superelevation and Equilibrium Superelevation. In European publications, Unbalance is called Cant Deficiency (if the actual Superelevation is less than the Equilibrium Superelevation) and Excess Cant (if the actual Superelevation is greater than the Equilibrium Superelevation).

Unbalanced Loads: Loads applied by a 3 phase transmission line that do not have the same load current across each of the 3 phases.

RFP No.: 13-57 – Addendum No. 5 - 10/09/2014

Uninsulated Overlap (or Mechanical Overlap):	A length of the overhead contact system where the contact and messenger wires of two adjoining tension sections overlap before terminating at opposite ends of the overlap section. The two catenaries are jumpered together, thus allowing pantographs under power to transition from one tension length to the next.
Uplift:	The vertical distance by which the overhead contact system is raised during the passage of a pantograph.
Upper Part of Embankment:	Top three feet of an embankment. It requires high quality design and construction in order to ensure the appropriate bearing-capacity to receive trackbed layers.
Unstable Formation:	It is yielding formation with non-terminating settlement including slope failure, which requires excessive maintenance efforts.

V

Variable Rate Spiral:	*See half-sine spiral.*
Variance:	Approved deviation, or exception, from a Minimum design criteria or Minimum design standard.
Vertical Curve:	Transition between grades. Normally parabolic in the United States and Asian practices and circular arc radii in European practices.
Virtual Transition:	An imaginary transition imputed as being of the length of the truck centers (TC) of the passenger carrying vehicle operated into the curve or turnout.
Virtual Transition Rate:	The transition rate with time into a curve or turnout with no actual transition, or a transition only to a larger radius, not to infinity.
Vital:	A subsystem, element, component, or functional requirement in a safety critical system that is required to be implemented in a fail-safe manner.
Volcanic:	Mapped or otherwise known volcanic centers and/or hydrothermal activity associated with volcanic activity.

RFP No.: 13-57 – Addendum No. 5 - 10/09/2014

W

Watershed:	The area that contributes water to a drainage system or stream.
Wayside Drainage:	Drainage system (enclosed pipes, ditches, precast channel) laid to collect and discharge surface water, seepage water, and ground water.
Wayside Facilities:	Facilities in close proximity to the trackway. It is inclusive of traction power, communications, and train control facilities and exclusive of tracks.
Wayside Power:	Electrical power provided from the utility grid to the electrified railroad right-of-way at convenient locations from the side of the rail tracks or corridor. Where utility feeds are not available, wayside power can be supplied by tapping the 25 kV ac parallel negative feeders with appropriate transformation.
Wayside Power Control Cubicle (WPC):	An enclosure for power supply equipment for operation of motorized disconnect switches and the associated Supervisory Control and Data Acquisition equipment located at the wayside.
Wayside Signals:	Devices located along the right-of-way for providing information to the locomotive engineers relative to train operations as opposed to the cab signal displays that are located within the control compartment of the rolling stock.
Wide Area Network (WAN):	Network which consists of the hardware and software required to switch, manage, process, control, monitor, and delivery data traffic between field locations and central control facilities via the fiber optic and copper cable infrastructure. The WAN's purpose is to deliver system data between any points on the wired network in a secure and reliable fashion.
Wireless Local Area Network (WLAN):	WLAN based on the IEEE 802.11 standards. *Also known as WiFi.*

Y

Yard: Inclusive of the following:

- Rolling stock yard where revenue service vehicles are stored and maintained.
- MOI yard which supports maintenance of trackwork, structures, and other facilities.

RFP No.: 13-57 – Addendum No. 5 - 10/09/2014

Yard Control Center (YCC):	*See Control Center.*
Yard Limits:	The tracks governed by the Yard Control Center at a yard facility.
Yardmaster:	The employee responsible for ensuring the coordination and availability of the rolling stock fleet to meet daily service requirements and who has overall responsibility for all activities in the yard facility
Yard Mode:	A mode of operation within yard limits which allows trains to proceed under the manual control of the locomotive engineer at Restricted Speed not exceeding 15 mph. Speed and yard signal compliance will be automatically enforced.
Yard Signal:	A fixed signal within the designated limits of a yard facility that displays either a red or yellow aspect and governs movements within the limits of the yard facility. A yellow aspect indicates that a route is set and locked, and that the section of track between opposing yard signals within which the switches are located is unoccupied.
Yard Signal System:	A means of train control wherein trains are operated in Yard Mode under the control of the locomotive engineer, subject to yard signal indications, speed restrictions and special instructions.
Yard Speed:	Restricted Speed not exceeding 15 mph, within yard limits.
Yard Track:	A section of track used for storage of trains that is auxiliary to the main track and not used by trains that are carrying passengers. Refuge tracks at stations are yard tracks. Yards consist of more than one yard track used for storing trains, inspecting trains, and accessing maintenance facilities. Yard tracks may or may not have track circuits on them.
Yoke Plate:	A plate or casting typically proportioned to accommodate unequal tensions in two or more wires or cables that are terminated on one side and which are balanced by a single terminating cable on the other side, permitting the use of only one balance weight arrangement for multiple catenary conductors.

RFP No.: 13-57 – Addendum No. 5 - 10/09/2014