Standard

s-3007-91

SPECIFICATIONS FOR THE CERTIFICATION OF NEW TRUCK DESIGNS FOR COMPATIBILITY WITH HOT BEARING DETECTION SYSTEMS

Adopted 1991

1. SCOPE

This specification outlines the requirements for all truck designs to determine if they are compatible with Hot Bearing Detection (HBD) Systems in use on the North American Railroad system.

2.0 APPLICABILITY

All truck designs which are not classed as conventional narrow-pedestal three-piece trucks or that have appurtenances that may interfere with accepted detector scans must be approved under the provisions of the specification. Truck designs with wheel dimensions in excess of that shown for Intended Maximum Axle (RWS) sizes shown in Figure 7 of AAR Specification M-107 will require compatibility testing (Appendix B). Trucks that are not considered compatible under the provisions of this specification may not be used in interchange service unless an alternate means of detection is provided.

3.0 PROCEDURE

Two primary methods of determining compatibility are employed as follows:

3.1 Scan Envelope Procedure

This procedure requires comparison of the truck design drawings with approved scan envelope drawings as described in Section 4.0 of this specification. In the event that potential obstructions are determined to exist, a laser examination as outlined in Appendix A may be used to evaluate the obstructions. If the laser examination indicates the obstructions do not adversely affect the scan, the truck may be approved. In the event of obstructions, the truck design may be modified to achieve acceptability or may undergo the Compatibility Test outlined in Appendix B.

3.2 Compatibility Test

The compatibility test requires a comparison of a truck representative of production models of the proposed design with conventional narrow-pedestal three-piece trucks, and is conducted in accordance with the procedures outlined in Appendix B.

4.0 SCAN ENVELOPES FOR CERTIFICATION OF NEW TRUCK DESIGNS

The minimum scan envelopes for standard 6½ x 12 and 6 x 11 journal trucks are presented in the form of computer generated drawings. To certify 6% x 12 and larger truck designs, the 6½ x 12 truck envelopes are compared to the truck manufacturers' drawings. To certify 6 x 11 and smaller truck journal designs, the 6 x 11 truck envelopes are compared to the truck manufacturer's drawings. If the comparisons demonstrate that the truck does not obstruct the required envelope, the truck will be certified.

The scan envelopes are shown in Figures 1 through 9. Figures 1 and 2 contain isometric views for the standard 6½ x 12 and 6 x 11 trucks. Figure 3 contains two-dimensional side-of-bearing and end-of-bearing views to show the scan angles for the inboard and outboard HBD's. Figure 3 also shows the scan angle for a vertical scan. This is included due to speculation that inboard-vertical scanners, which will exploit the improved sensor response times available, will soon be introduced. Figures 4 and 5 are two-dimensional drawings of the inboard and outboard scans for the standard 6½ x 12 truck. Figures 6 and 7 are two-dimensional drawings of the inboard and outboard scans for the standard 6 x 11 truck. Figures 8 and 9 display the "vertical look" scan envelopes for the 6 x 11 and 6% x 12 trucks. The outer edges of the crosshatched area in Figures 4 through 9 represent the limits of the unobstructed area required at the bearing surface.

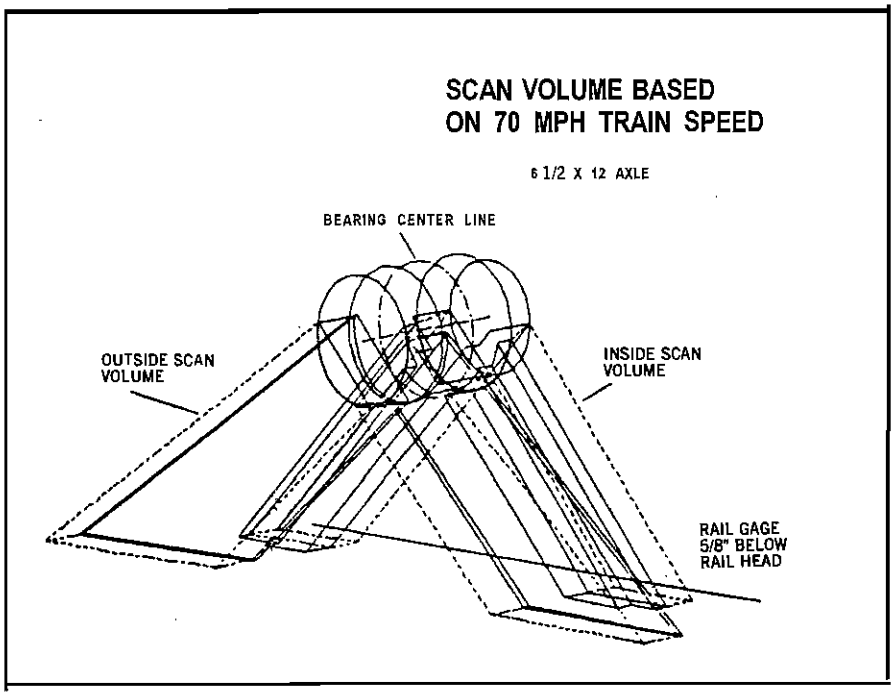

Isometric View of 6% x 12 Truck Envelope
(Vertical Look Scan Not Shown)
Figure 1

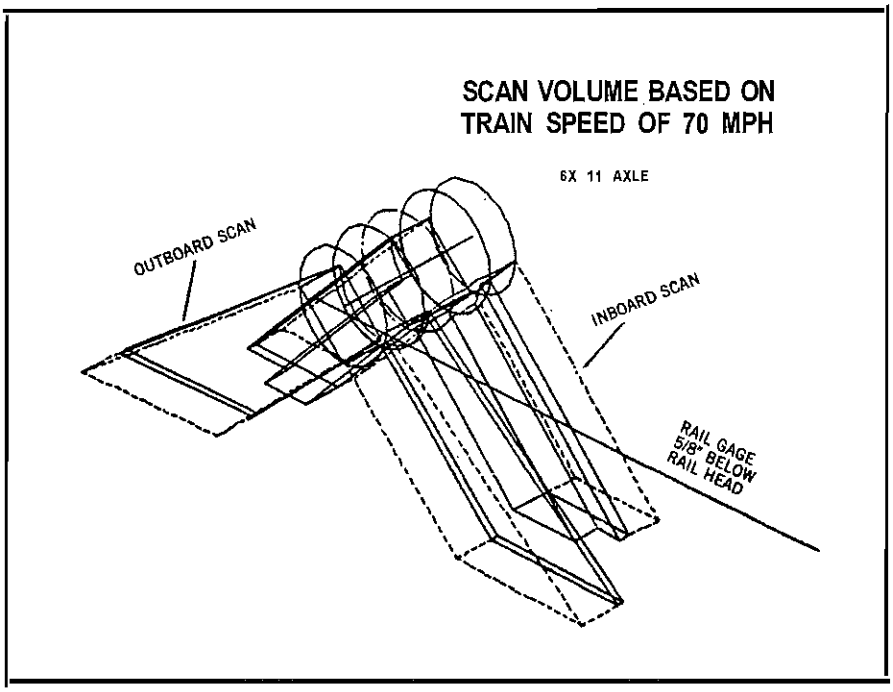

Isometric View of 6 x 11 Truck Envelope
(Vertical Look Scan Not Shown)
Figure 2

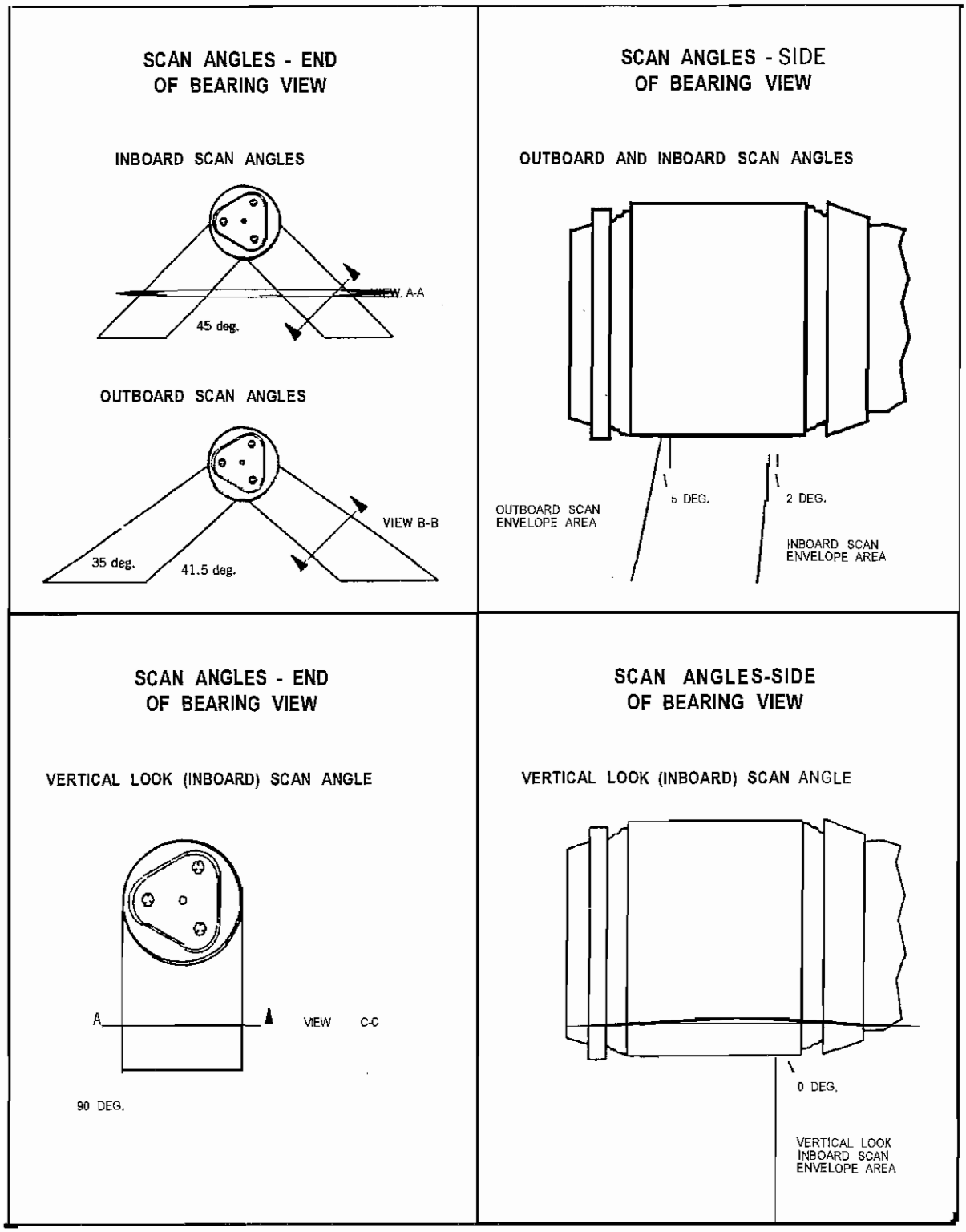

End-of-Bearing and Side-of-Bearing
View to Show Scan Angles

Figure 3

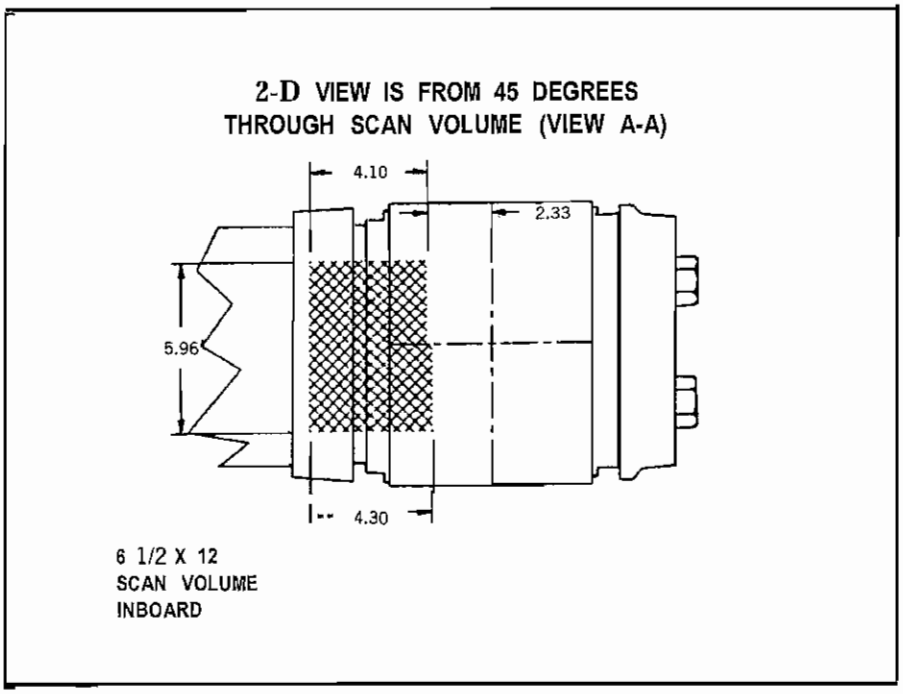

Inboard Scan for 6½ x 12 Trucks
Figure 4

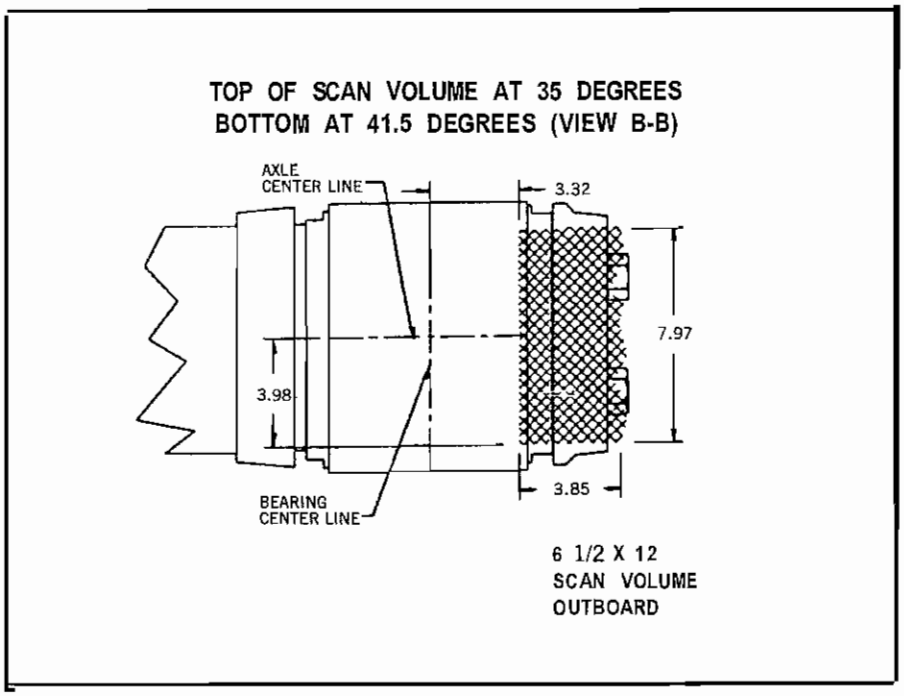

Outboard Scan for 6½ x 12 Trucks
Figure 5

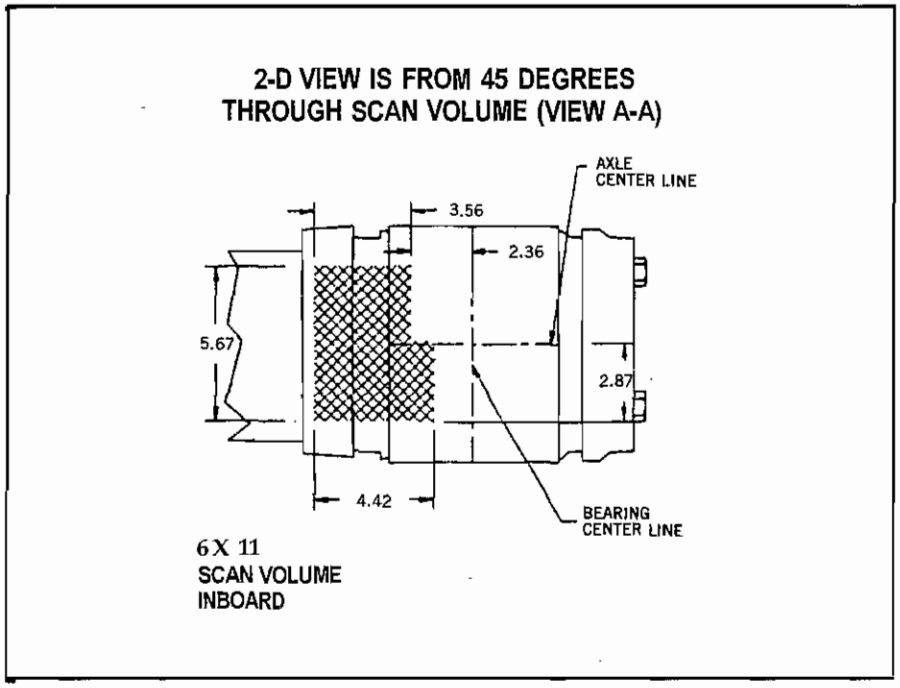

Inboard Scan for **6** x 11 **Trucks**
Figure 6

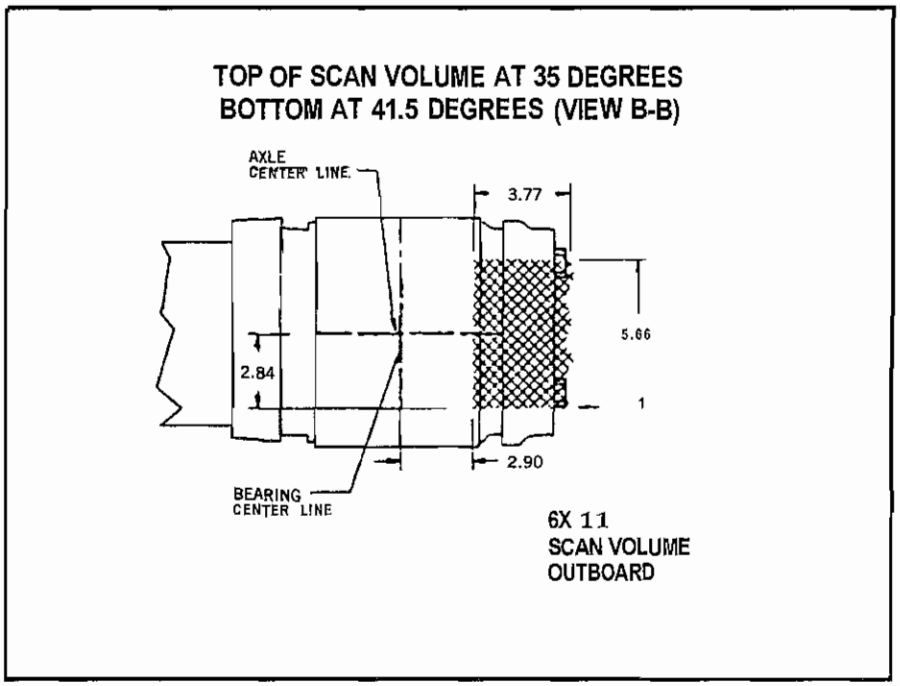

Outboard Scan for 6 x 11 Trucks
Figure 7

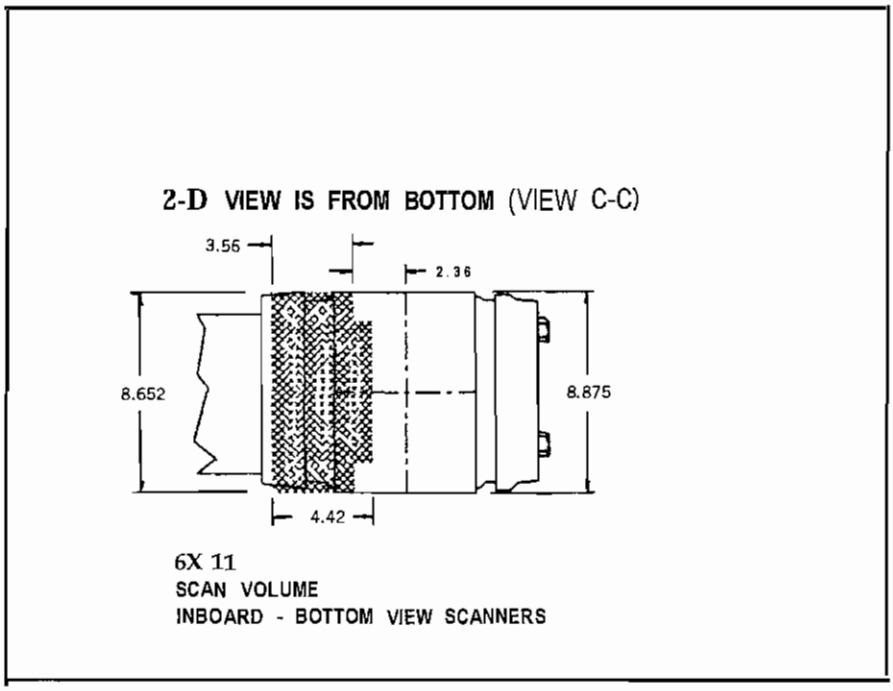

Vertical Look Scan for 6 x 11 Trucks
Figure 8

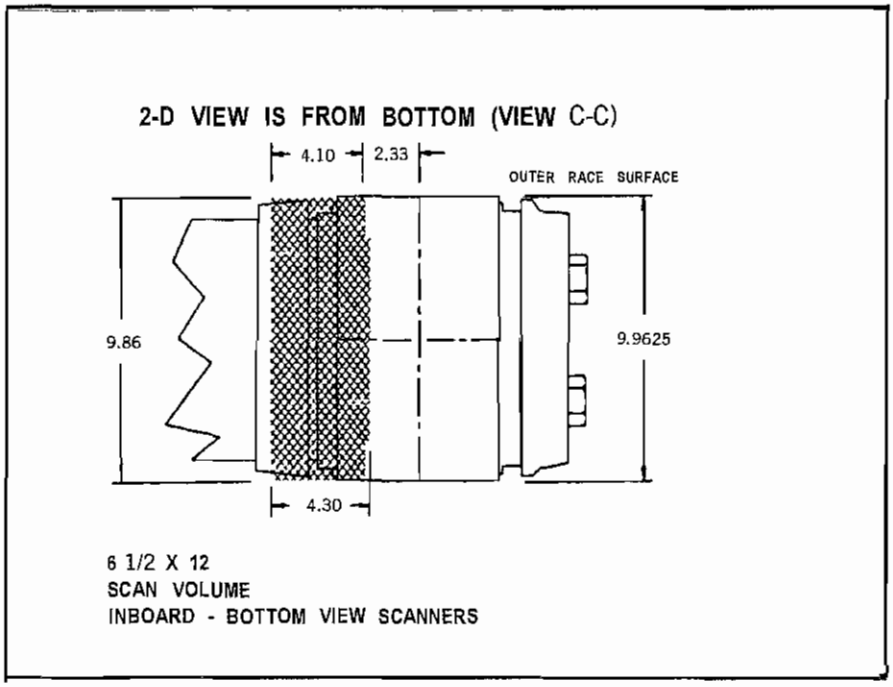

Vertical Look Scan for 6½ x 12 Trucks
Figure 9

5.0 COMPATIBILITY TEST FOR CERTIFICATION OF NEW TRUCK DESIGNS

If the results from the scan envelope procedure are not acceptable for certification of a truck design, a compatibility test must be used to certify the truck design as outlined in Appendix B.

6.0 APPLICATION PROCEDURES

6.1

Applications for approval will be submitted to the Director Technical Committees-Freight Car Construction.

6.2

Applicable drawings must be submitted in 20 copies. Drawings must reflect the truck design with a clear depiction of the scan area.

The truck designer is responsible for insuring the submission clearly depicts the truck design and related scan area. If necessary, a narrative should accompany the submission to clarify any issues not readily discernable from the submitted drawings.

6.3

Designs submitted for hot bearing detector compatibility must be approved by the AAR Mechanical Division for conformance with other applicable specifications. The minimum axle spacing allowed is 52 inches. Designs with axle spacing of less than 52 inches will be required to undergo compatibility testing.

Standard S-3007-91

Appendix A

LASER FIXTURE FOR AIDING TRUCK CERTIFICATION WITH SCAN DIAGRAMS

1.1 BACKGROUND

The AAR's HBD research program developed a laser system for detector simulation. The simulation of the HBD scan allows the truck to be evaluated for potential obstructions to the scan path. The scan path and target (bearing) are documented with video recordings.

The laser simulations were first conducted by replacing the sensing element of each detector with a low output laser—the orientation of a laser beam was arranged to simulate the respective HBD scanners. The test vehicle was moved through the laser's projected beam at speeds less than 3 mph. This method proved to be inefficient because of the awkwardness of installing the laser system into each detector system and the difficulty of controlling trains at such low speeds.

Therefore, a portable and adjustable laser fixture, which allows laser simulations of all HBD systems, was developed. The device is easily adjusted to simulate each detector. Also, the portable laser fixture can be transported to any site (including indoor facilities). This flexibility makes it possible for single truck roll-by-tests to be done by hand, thus eliminating the low train speed control problem.

1.2 PROCEDURE

Laser simulations can be performed on rail with rail head height no less than 6 13/16 inches. Use of rail of smaller size is dependent on clearance. The fixture is designed to allow installation into cribs where the tie gap is no less than 16 inches. Although the simulations can be performed outdoors, video documentation of the laser simulations is enhanced when performed indoors due to lighting conditions. The equipment requires 110 VAC.

Figure 1Ø depicts the portable and adjustable laser fixture for HBD simulation. It is held to the rail with a simple clamping arrangement. The alignment of the laser is adjusted to simulate any HBD system. The laser and electronic camera head are mounted on the adjustable base.

The orientation of the laser beam is arranged to simulate the respective HBD scanners. Each HBD system has its own orientation to the rail, and is aligned with an adjustable target fixture which can be set for the correct height above the rail and lateral distance on the field side of the rail. The target fixture is also used to align the portable and adjustable laser fixture. The laser and target alignment parameters required for several HBD's are listed in Table 1.

The laser truck certification procedure is given below:

1) Adjust alignment fixture to proper vertical distance above the rail and lateral distance on field side of rail for selected HBD.
2) Adjust laser fixture to proper scan angle and toe-in angle for selected HBD.
3) Adjust laser mechanism until laser is centered on alignment target.
4) Mark the bearings to show the scan envelope boundaries.
5) Move the truck through the test zone.

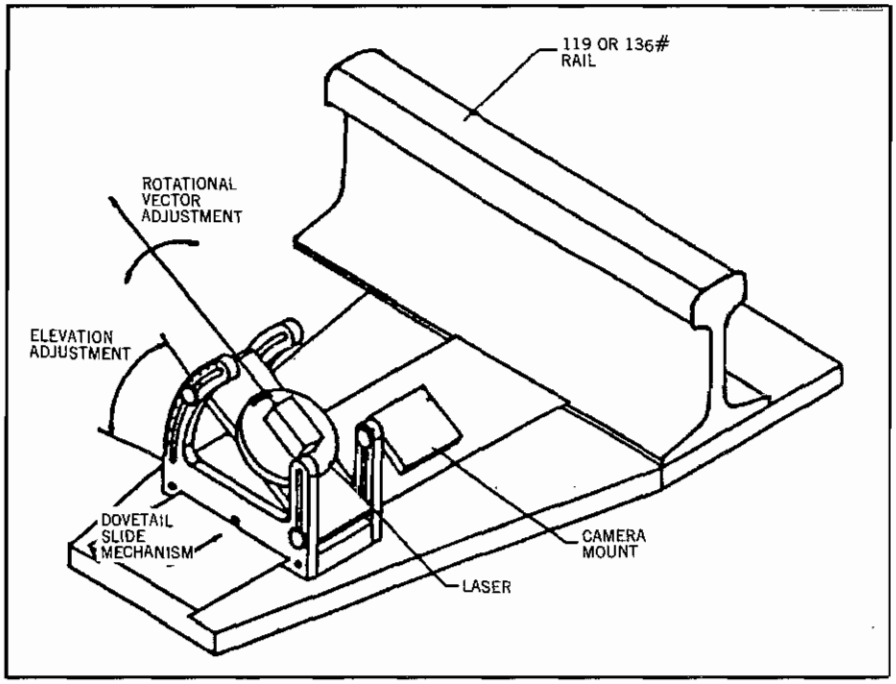

Laser Fixture-Isometric Assembly

Figure 10

Laser Alignment Parameters

Table 1

HBD System	Alignment Fixture		Laser Fixture	
	Vertical Distance	**Lateral Distance**	**Scan Angle**	**Toe-in Angle**
Servo 7707	20"	14.5"	35 deg.	7 deg.
Sentry	18"	14.5"	45 deg.	5.5 deg.
Servo 8909	20"	6.75"	45 deg.	2 deg.
Servo Isoclamp (9000)	20"	7.25"	45 deg.	2 deg.
Harmon	20"	65"	45 deg.	0 deg.
"Vertical Look"[1]	—	6.75"	90 deg.	0 deg.

[1]Vertical Look Scanners.

Standard S-3007-91

Appendix B

COMPATIBILITY TEST FOR CERTIFICATION OF NEW TRUCK DESIGNS

11 GENERAL

If the results for the scan envelope procedure are not acceptable for certification of a new truck design, a compatibility test will be required for certification of the new truck design. The procedures for this test are outlined below.

12 TEST CONSIST AND INSTRUMENTATION

The test consist includes a high-speed locomotive, a stable buffer car, two baseline cars with conventional narrow-pedestal three-piece trucks, and a test car equipped with the new truck design. The baseline cars include a hopper with 6½ x 12 inch roller bearings and 36-inch wheels, and a flatcar with 6 x 11 inch roller bearings and 28-inch wheels.

For this test, one truck from each of the two baseline cars and one truck from the test car are modified for hot bearing simulation. The roller bearings in these trucks are heated with resistance type heaters to simulate failing bearings. Twice the normal amount of grease is packed into the heated bearings to provide additional heating due to grease shearing. The wheel sets having the heated bearings are configured with a simulated "worn" thin-flange condition (1⅛") and forced by a slight diameter difference against the rail on the engineer's side of the test consist. This is necessary to ensure consistent laterally displaced wheel set position while passing through the hot bearing detector facility.

The hot bearing simulation is accomplished with 3.6 kilowatt electric band heaters wrapped around the center of the bearing cups. The 3-inch strip heaters are hoop shaped for use in cylindrical applications. The heaters, insulation, and associated instrumentation cables are located where they do not obstruct the scan for inboard or outboard scanning type detectors.

Each heated bearing in the test consist is instrumented with four type K thermocouples mounted on the inboard and outboard side of the heater, and on the inboard and outboard seal cases. All thermocouples are positioned at the lowest point on the bearings. The inboard thermocouple located ¼ inch from the heater is used to control the heat input. Two dataloggers are used to acquire data and to control the bearing heating systems.

13 WAYSIDE INSTRUMENTATION AND DATA ACQUISITION

The Railroad Test Track (RTT), located at the Transportation Test Center, Pueblo, Colorado, is a 14-mile loop with 136-pound continuously-welded rail that is capable of sustaining train speeds up to 125 mph. A tangent section of track contains the HBD's.

Four HBD systems are currently located on the RTT. These include the Harmon WCO-32, Servo models 7707, 8909, and 9000.

Digital and analog data are acquired at the wayside facility for each detector tested. The unprocessed HBD outputs (raw heat signals) and the gate signals are recorded on FM analog tape. Information from the HBD's processing units is sampled and stored digitally. The digitized detector information is then reduced to the form of peak temperature values. The information is stored on disk files, which are later used during data reduction operations designed to merge with the digital onboard bearing temperature data.

14 TEST SEQUENCE

For the compatibility test, the bearing temperature is controlled to 210°F above ambient, and the test speed is 70 mph. The bearing set temperatures are measured and controlled by the thermocouple mounted approximately 1 inch from the bottom inside edge of the bearing cup. If the value is found to be within ±15°F of the desired temperature, the point is considered "good" and is used for the Statistical Analysis.

Sufficient runs are made past the HBD's to ensure statistically valid results. A minimum of 10 data points for each bearing in each direction, clockwise and counterclockwise, must be recorded for each detector.

Additional measurements with hand-held infrared temperature sensors are taken at regular intervals between tests to ensure consistent temperature profiles across the heated bearings.

15 DATA REDUCTION

Data are reduced statistically and as raw detector signal strip-chart recordings. The reduction techniques required for the statistical analysis are described in Section 1.6. The raw detector signals are transferred from the analog tape to a strip-chart recorder.

1.6 STATISTICAL ANALYSIS AND DATA INTERPRETATION

The statistical analysis is performed with a commercially available software program. Figure 11 presents a result of the statistical methods used for analyzing the compatibility test data. This type of plot is generated for each HBD during the compatibility test. The y-axis of this plot is the difference between the actual bearing temperature and the temperature that the HBD senses for the bearing. The x-axis of the exhibit displays the truck type (baseline or test truck). Data points are labeled with a letter of the alphabet, with A representing one sample at that point, B representing two samples, C representing three samples, and so forth. The horizontal line represents the lower statistical boundary set by the baseline tracks.

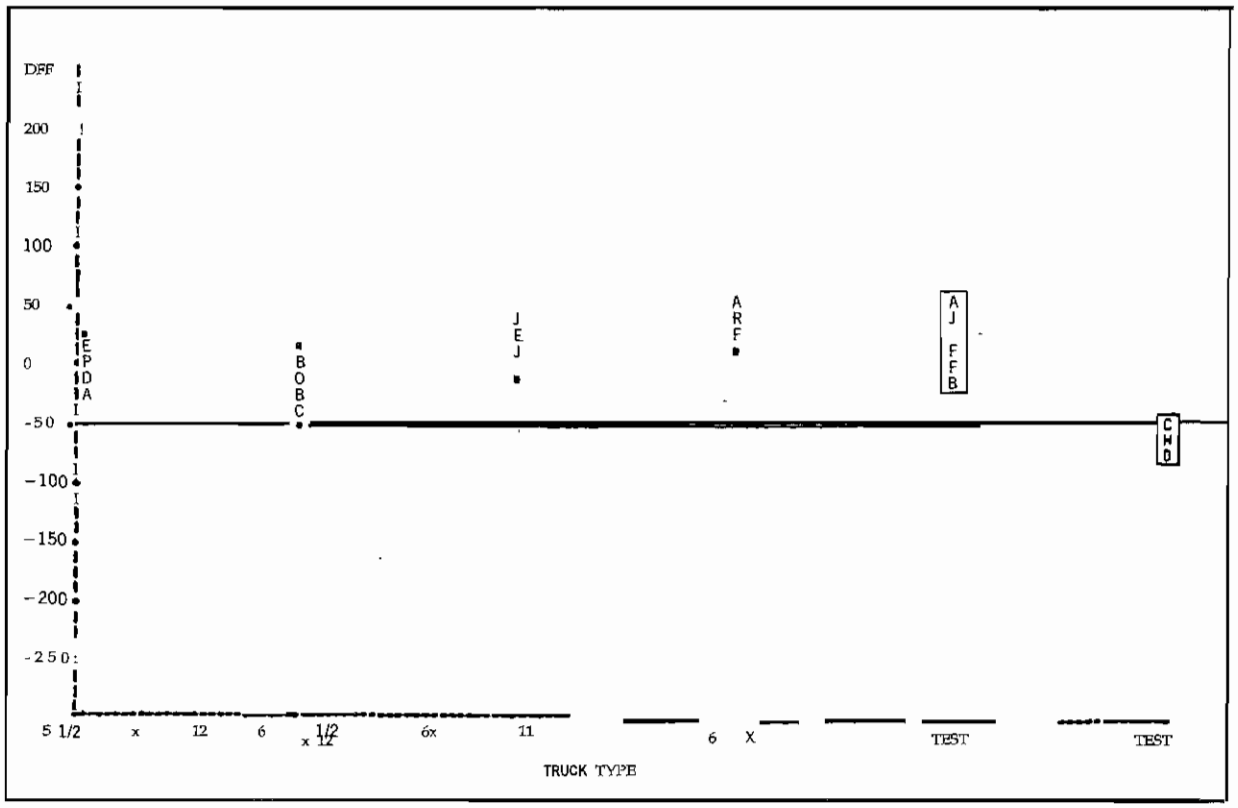

Example Result

Figure 11

1.7 COMPATIBILITY TEST CERTIFICATION CRITERIA

1.7.1

The compatibility test certification determines whether the HBD systems scan the bearings in the test truck as well as they scan the bearings in the standard narrow-pedestal three-piece trucks. Statistical results, similar to the example given in Figure 11, are used for this comparison.

1.7.2

Test data from the base cars will be used to establish lower tolerance limits for conventional trucks based on a statistical confidence level of **95** percent that **99** percent of the observations will be contained above this limit.

1.7.3

If no more than one data point falls below the tolerance limit for each condition of detector, bearing flange position, and direction, and less than 1 percent of the total data points fall below the tolerance limit, the performance of the truck is considered acceptable.